BEFORE YOU BEGIN

Thank you for purchasing the innovative Adjustable Dumbbell Set. The Adjustable Dumbbell Set is designed to speed up your workouts and to keep your workout area organized.

Read all precautions and instructions in this manual before you use the Adjustable Dumbbell Set. If you have questions after reading this manual, please call the nearest Customer Care Department:

US: 1-800-288-4802

Germany: 01805 231243
Outside Germany: +49 2233 613250

France: +33(0) 810 121 140

Italy: 800 865 114
Outside Italy: +39 075 5910111

UK: 0845 7089009
Outside UK: +44 0113 3877133

Australia: 02 9722 3800

WARNING DECAL PLACEMENT

Warning decals have been placed in the locations shown below. If a decal is missing or illegible, call the nearest Customer Care Department and order a free decal. Apply the decal in the location shown.

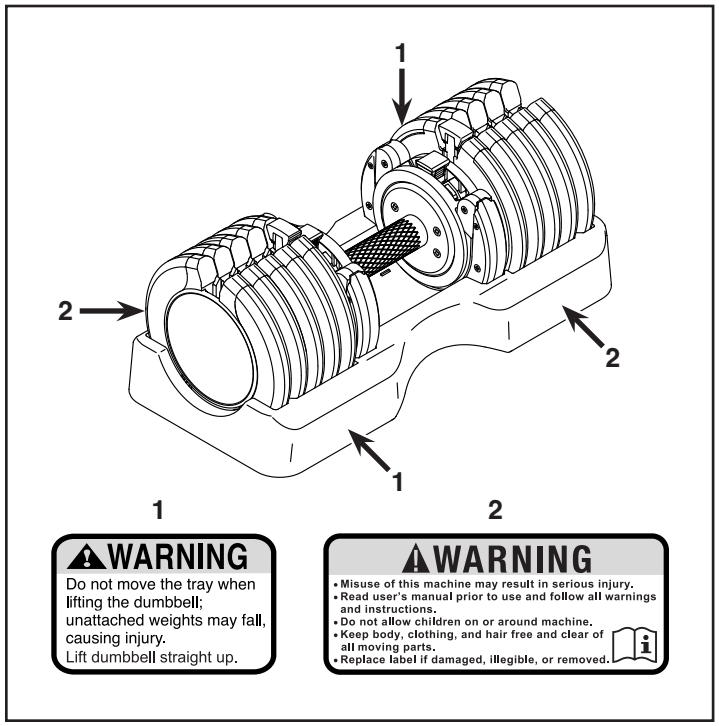

IMPORTANT PRECAUTIONS

⚠WARNING: To reduce the risk of serious injury, read the following important precautions and instructions before you use this product. ICON assumes no responsibility for personal injury or property damage sustained by or through the use of this product.

1. **It is the responsibility of the owner to ensure that all users of this product are adequately informed of all precautions.**
2. **Before beginning any exercise program, consult your physician. This is especially important for persons over age 35 or persons with pre-existing health problems.**
3. **This product is not intended for use by persons with reduced physical, sensory, or mental capabilities or lack of experience and knowledge, unless they are given supervision or instruction about use of the product by someone responsible for their safety.**
4. **Use this product only as described in this manual.**
5. **This product is intended for indoor, home use only. Do not use this product in a commercial, rental, or institutional setting.**
6. **Use this product on a level surface with adequate clearance around it and above it for the exercises that you will perform. Place only the included dumbbells on the trays.**
7. **Inspect this product before each use. Do not use this product or try to repair it if it is damaged.**
8. **Keep children under age 16 and pets away from this product.**
9. **Always wear protective footwear while using this product. Never place your fingers between the dumbbells and the trays.**
10. **Over exercising may result in serious injury or death. If you feel faint, if you become short of breath, or if you feel pain while exercising, stop immediately and cool down.**

HOW TO USE THE DUMBBELLS

Each handle (A) has two permanently attached weight plates and weighs 10 lbs. (4.5 kg).

Each outer weight plate (B) weighs 5 lbs. (2.3 kg). Each handle (A) can hold zero, two, four, six, or eight outer weight plates.

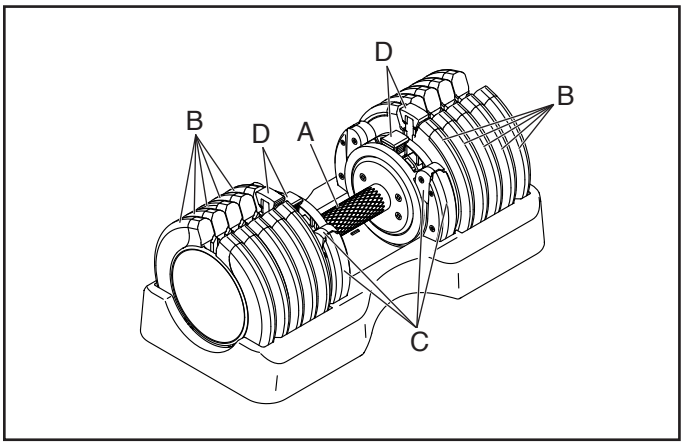

Each inner weight plate (C) weighs 1.25 lbs. (0.6 kg). Each handle (A) can hold two or four inner weight plates.

To select the desired weight plates (B, C), first orient the dumbbell so that the selectors (D) are on top, and **lower the dumbbell straight downward** into the tray.

To select the desired outer weight plates (B), lift a selector (D), slide it until it is aligned with one of the outer weight plates, and then lower it. **Rock the selector from side to side to make sure that it is aligned with one of the outer weight plates and that it is fully inserted.** Repeat this step on the other side of the handle (A). **Always select the same number of outer weight plates on both sides of the handle.**

To select the desired inner weight plates (C), lift a selector (E), slide it to one side to select the +2.5 lbs. setting or slide it to the other side to select the +5 lbs. setting, and then lower it. **Rock the selector from side to side to make sure that it is fully inserted.** Repeat this step on the other side of the handle (A). **Always select the same number of inner weight plates on both sides of the handle.**

To use a dumbbell, **lift it straight upward** off the tray so that any unattached weight plates (B, C) remain in the tray. When you finish using the dumbbell, orient it so that the selectors (D) are on top, and **lower it straight downward** into the tray.

Try selecting several different combinations of weight plates (B, C) until you are familiar with the dumbbells.

LIMITED WARRANTY

ICON Health & Fitness, Inc. (ICON) warrants this product to be free from defects in workmanship and material, under normal use and service conditions. Parts are warranted for ninety (90) days from the date of purchase.

This warranty extends only to the original purchaser (customer) and is not transferrable. ICON's obligation under this warranty is limited to repairing or replacing, at ICON's option, the product through one of its authorized service providers. All repairs for which warranty claims are made must be preauthorized by ICON. If replacement parts are shipped while the product is under warranty, the customer will be responsible for a minimal handling charge. This warranty does not extend to freight damage to the product. This warranty will automatically be voided by the following conditions: (1) if the product is used as a store display model, (2) if the product is purchased or transported outside the USA, (3) if all instructions and warnings in this manual are not followed, (4) if the product is abused or improperly or abnormally used, or (5) if the product is used for commercial or rental purposes. No other warranty beyond that specifically set forth above is authorized by ICON.

ICON is not responsible or liable for the following damages: (1) indirect, special, or consequential damages arising out of or in connection with the use or performance of the product; (2) damages with respect to any economic loss, loss of property, loss of revenues or profits, loss of enjoyment or use, or costs of removal or installation; or (3) other consequential damages of any kind. Some states do not allow the exclusion or limitation of incidental or consequential damages. Accordingly, the above limitation may not apply to the customer.

The warranty extended hereunder is in lieu of any and all other warranties, and any implied warranties of merchantability or fitness for a particular purpose are limited in their scope and duration to the terms set forth herein. Some states do not allow limitations on how long an implied warranty lasts. Accordingly, the above limitation may not apply to the customer.

This warranty provides specific legal rights; the customer may have other rights that vary from state to state.

ICON Health & Fitness, Inc.
1500 S. 1000 W., Logan, UT 84321-9813

Part No. 429767 R1020A

Printed in China © 2020 ICON Health & Fitness, Inc.