BALMUDA

Control Code

NatureWind Studio

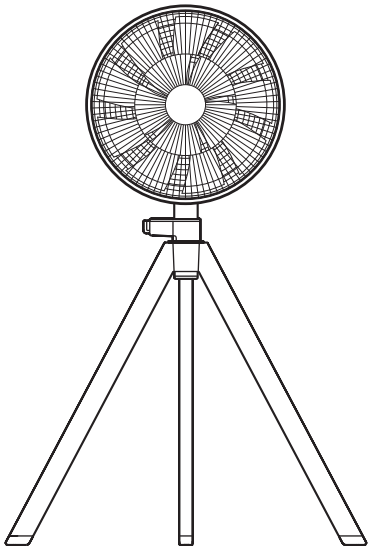

Portable Fan 12-Inch Diameter (Household Use Only)

AGR01US Series

Instruction Manual Limited Warranty

Thank you for purchasing NatureWind Studio. Before using the product, be sure to read this manual and its "IMPORTANT SAFETY INSTRUCTIONS" section (p. 2 to 5). In addition, pay special attention to the contents marked with ⚠.
Carefully store the manual after reading it together with your proof of purchase that shows the date of purchase and dealer's name.

FOR USE IN U.S. ONLY
WARRANTY VOID IF USED OUTSIDE U.S.

Important	Be sure to read this manual before use. Keep it in a safe place for future reference. For information on our warranty policy, please refer to the BALMUDA website (https://us.balmuda.com).

Contents

IMPORTANT SAFETY INSTRUCTIONS..... 2
Contents of Package / Names of Parts..... 6
Assembly..... 7
Operation 10
Power timer indicator 11
Wind speed indicator 11
Manual Angle Adjustment 12
Setting the Automatic Swivel Angle.....13
Maintenance Procedures /
Disassembly for Storage.....15
Troubleshooting.....18
Product Registration.....19
Disposal 20
Product Specifications.....20
Customer Support.....20

IMPORTANT SAFETY INSTRUCTIONS

READ AND SAVE THESE INSTRUCTIONS

Thoroughly read these instructions before using the product to ensure correct use. The precautions described in this manual must be followed to ensure the safe use of this product and prevent hazards to yourself and others, as well as damage to the product and your home or property.

These symbols indicate the degree of harm or damage that may be caused by improper use.

⚠ **WARNING**	Indicates **actions that could result in death or serious injury**.
⚠ **CAUTION**	Indicates **actions that could result in minor injury or cause damage to buildings or furniture**.

These symbols indicate requirements during the use of the product.

Actions you must avoid.

Instructions indicating actions you must take.

General precautions.

- In the event of an emergency, such as an earthquake or fire, or any other abnormality, immediately unplug and stop use of the product.
- This product is not intended for use outside the U.S. For use in the U.S. only.
- This product is for household use only. Do not use it for any other purpose.

⚠ WARNING

Power Cord and AC Adapter

Do not use any AC adapter other than that provided with the product. Do not use the provided AC adapter with any other product.
Doing so may cause malfunction or fire.

This product is for use in the U.S. only. Do not use outside of the U.S.
Doing so may cause fire, electric shock, or malfunction. Use a 120 V AC power source.

Avoid damaging the power cord and AC adapter.
Damage may cause fire or electric shock.
Do not scratch, pull, modify, or sharply bend the power cord and AC adapter. Do not place it near heating devices, use it while bundled, step on it, or place objects on it.

Do not use a damaged power cord and AC adapter.
Doing so may cause fire or electric shock.
If the power cord and AC adapter is damaged, stop use immediately and contact BALMUDA Support (p. 20).

Do not run the power cord under carpeting. Do not cover the cord with throw rugs, runners, or similar coverings. Do not route the cord under furniture or appliances. Arrange the cord away from traffic areas and so that it will not be tripped over.

Do not connect or disconnect the power plug with wet hands.
Doing so may cause electric shock.

Insert the power plug fully into the outlet.
If the plug is not inserted fully, it may overheat and cause fire or electric shock.

Disconnect the power plug from the outlet when not using the product.
Failure to do so may cause electric shock, shorting, fire, or injury.

Before performing maintenance or inspection or moving the product, always turn the product off, wait for it to stop completely, and disconnect the power plug.
Failure to do so may lead to injury due to unintended operation of the product.

To disconnect the power plug from the outlet, grasp the AC adapter, not the power cord, and pull it out. Regularly clean off any dust from the power plug.
Failure to do so may cause shorting, electric shock, or fire.

Usage

Do not allow a child or other person who requires assistance to use the product unsupervised.
This product is not intended for unsupervised use by children or other persons who require assistance.
Always make sure a guardian or caretaker is present when such persons are using the product.

Do not disassemble, repair, or modify the product.
Doing so may cause fire or abnormal operation leading to electric shock or fire.

Do not modify the fan, such as by adding supplemental filters. The fan is not intended to be used for air cleaning purposes.

To reduce the risk of fire, electric shock, or injury, do not use replacement parts that have not been recommended by the manufacturer (e.g., parts made at home using a 3D printer).

Do not use the product near flammable materials, lit cigarettes, or lit incense.
Doing so may cause fire.

Do not operate without attaching the fan blade or guard.
Doing so may cause injury.
Using the product while the guard is not correctly attached is very dangerous. Check that the guard is firmly secured before use.

Do not insert fingers inside the guard or into moving parts.
Doing so may cause injury.

Do not splash the main unit or AC adapter with liquids or use when wet. Do not use the product in locations where the main unit or AC adapter may get wet. Do not insert foreign objects into the product.
If liquids (such as tap water, seawater, or beverages) or foreign substances get on the main unit or AC adapter, it may cause fire, electric shock, or malfunction.
If liquids or foreign substances get on the product, disconnect the power plug immediately.

Do not touch the product with wet hands.
Doing so may cause electric shock.

Ensure that children do not play with the product.
Failure to do so may cause electric shock or injury.

If an abnormality or malfunction occurs, immediately stop use and unplug the product.
Failure to do so may cause fire.
Stop use of the product immediately and contact BALMUDA Support (p. 20).

Maintenance

Regularly clean off any dust on the power plug. Disconnect the power plug when not using the product for an extended period.
Accumulated dust on the power plug, along with moisture in the air, may cause shorting and fire.

If the guard is removed during the servicing or replacement of a component, it must be reinstalled in its original condition.

⚠ CAUTION

Setup

Do not use or store the product in the following locations.
- Near gas stoves or other sources of fire
- Locations where flammable gas is present
- Locations exposed to rain or splashing water
- Locations exposed to high temperatures or high humidity
- In direct sunlight
- Outdoors

Doing so may cause fire, electric shock, deformation, or discoloration.

Do not place the main unit on a surface that is unstable or not level.
Doing so may cause the main unit to fall over, leading to injury or malfunction.

Avoid bumping the main unit during setup or use.
Failure to do so may cause the main unit to fall over, leading to injury or malfunction.

Avoid pinching your fingers in the moving parts or joints when setting up or using the main unit.
Failure to do so may cause injury.

Usage

Do not use the fan to blow directly on you for extended periods.
Excessive cooling may have detrimental health effects.

Do not use sprays on the product.
Flammable sprays may cause fire or explosion.
Other sprays may cause deterioration or damage the product's plastic or coated parts.

Do not drop or strongly hit the product.
Doing so may cause malfunction or damage.

Do not pick up the product while it is operating.
Doing so may cause injury.

Do not use the product if you notice changes such as high temperature, deformation, or odor.
Doing so may cause overheating and fire.
In the event of an abnormality, stop use of the product and contact BALMUDA Support (p. 20).

Keep curtains and other fabrics from getting caught in the fan blade.
Failure to do so may cause malfunction or damage.

Contents of Package / Names of Parts

Figures in parentheses ( ) indicate the number of each item included.

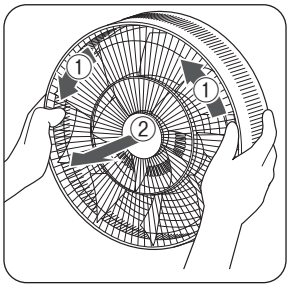

Unpacking the fan guard section

Rotate the front fan guard in the direction indicated by arrow ①, then pull it out in the direction indicated by arrow ②.

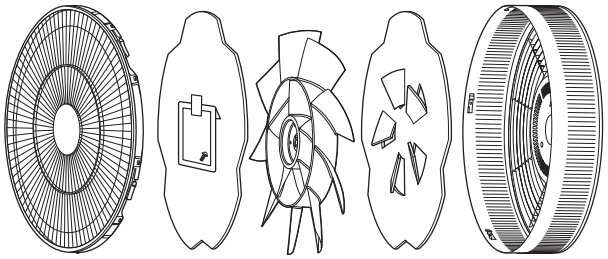

Front fan guard (1) | Screw (1) | Fan blade (1) | Side guard (1)

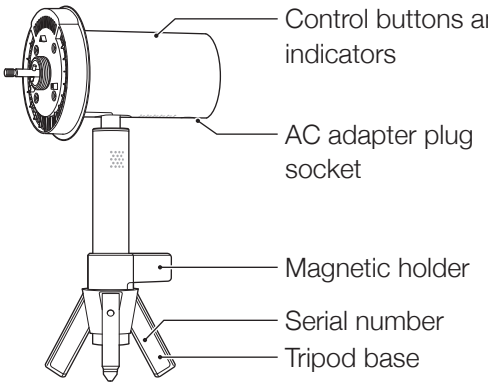

Motor section (1)

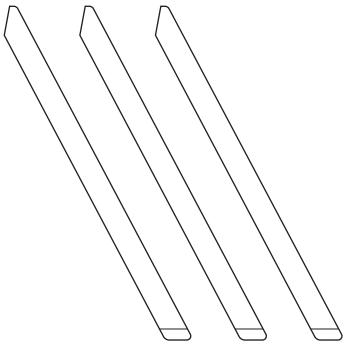

Legs (3)

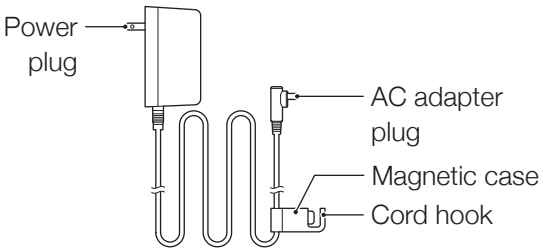

AC adapter (1)

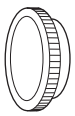

Fan holder (1)



Guard holder (1)



Instruction Manual (1)

Assembly

1 Insert the legs into the tripod base so that they click into place.

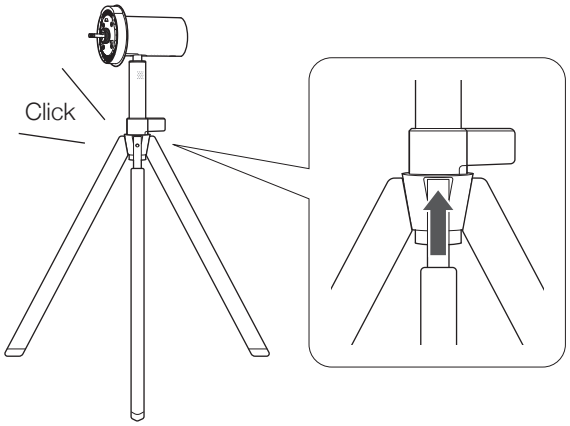

⚠
- Take care when assembling the product to avoid injury.
- Firmly insert the legs all the way into the tripod base. After inserting the legs, lift up the main unit to check that the legs do not come loose.
- When handling or attaching/detaching the legs, ensure that the surrounding space is clear of objects and people. Failure to do so may cause injury.

2 Fit the side guard onto the motor section and secure it with the guard holder.

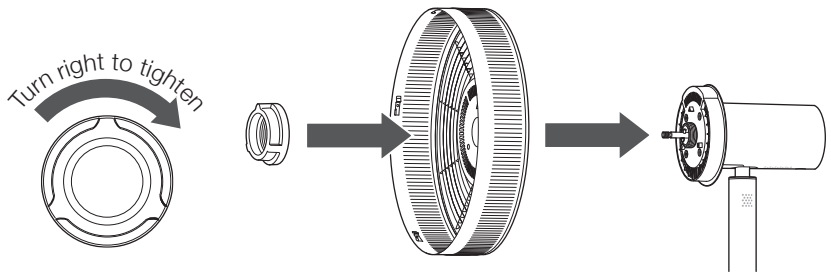

Note: Align the ○△□ symbols on the side guard with those on the motor section.

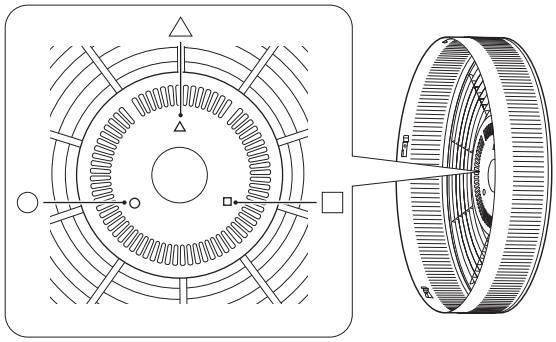

Side guard

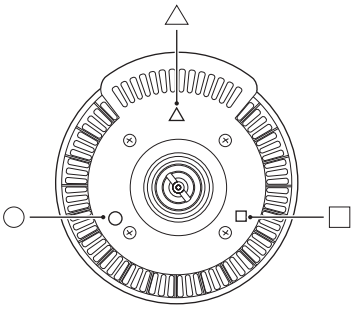

Motor section

3 Secure the fan blade with the fan holder.

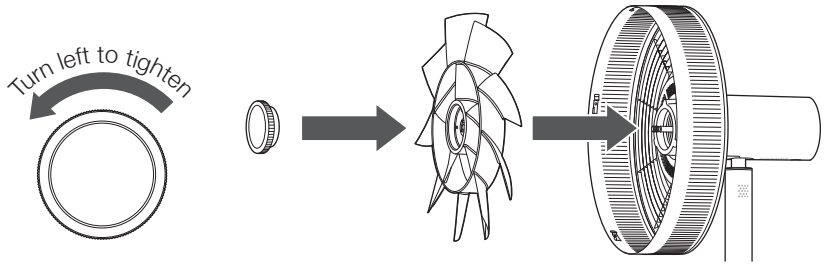

Note: Be careful not to attach the fan blade backward.

4 Attach the front fan guard.

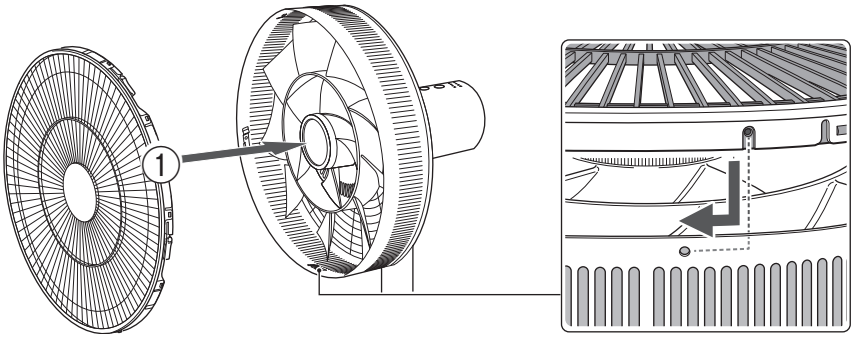

① Fit the front fan guard into the side guard.

When fitting the front fan guard in, position the front fan guard screw hole to the right of the side guard screw hole.

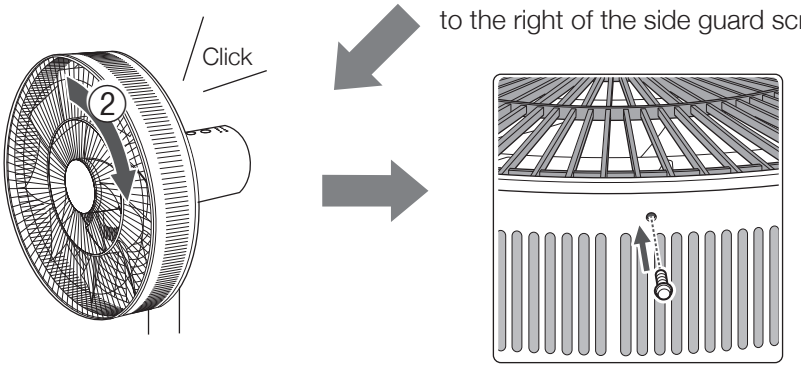

② Rotate the front fan guard until it locks into place.

③ Use the provided screw to secure the fan guard.

⚠

- Do not remove the blade warning label attached to the fan blade.
- Using the product while the guard is not correctly attached is very dangerous. Check that the guard is firmly secured before use.



Blade warning label

5 Connect the AC adapter plug to the plug socket and attach the magnetic case to the main unit. Loop any excess length of the power cord over the cord hook.

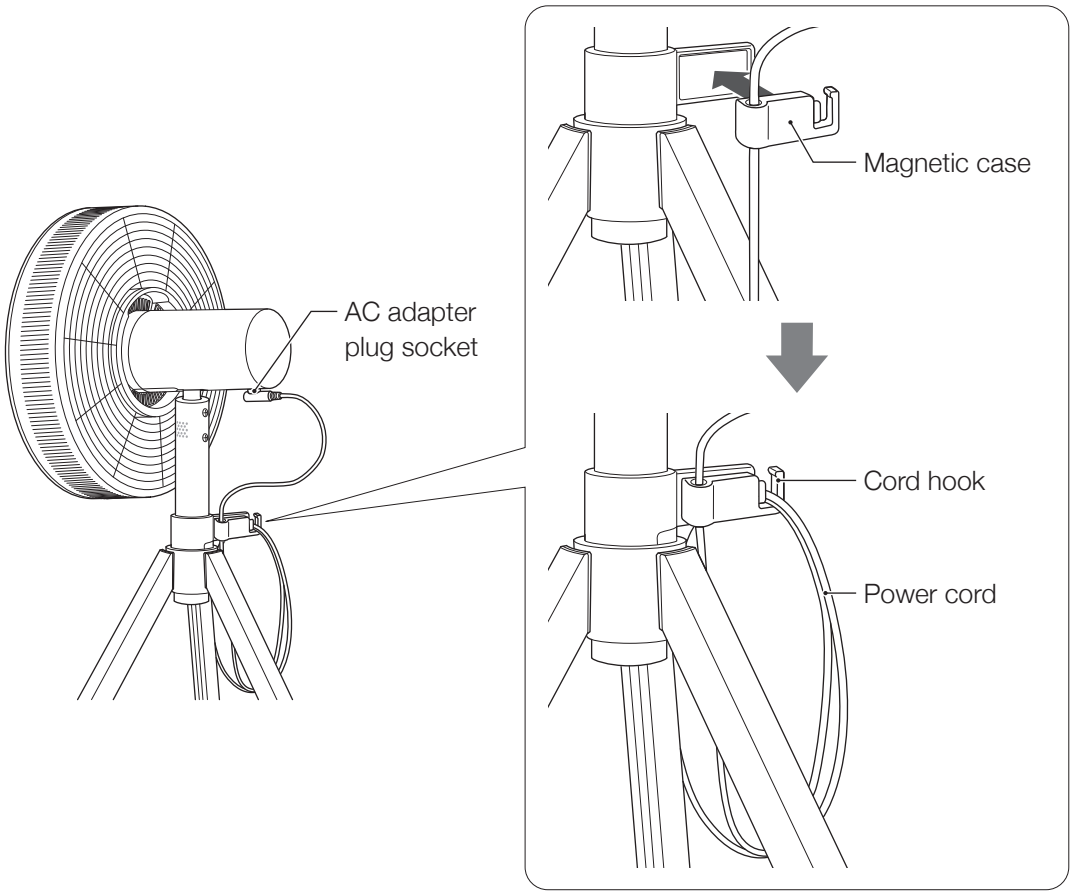

⚠
- Do not hang anything other than the power cord on the cord hook.
- Position the product so that there is slack in the power cord between the outlet and main unit. Using the product while there is tension in the power cord may cause the main unit to fall over, leading to injury or malfunction.

6 Connect the AC adapter to the outlet.

Note: If connected correctly, the product will make an electronic “bing” sound.

Operation

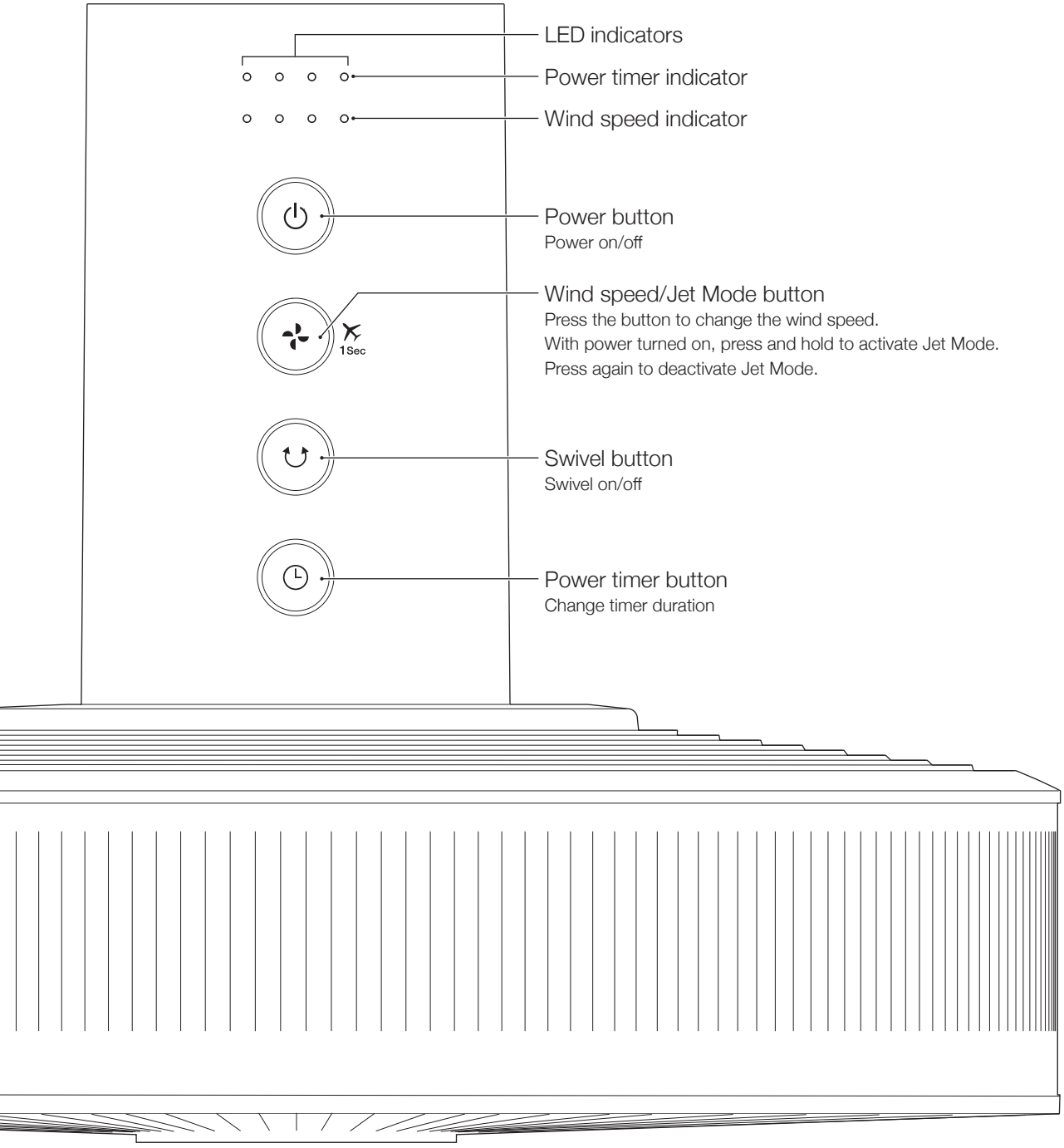
LED indicators
Power timer indicator
Wind speed indicator
Power button
Power on/off
Wind speed/Jet Mode button
Press the button to change the wind speed.
With power turned on, press and hold to activate Jet Mode.
Press again to deactivate Jet Mode.
1Sec
Swivel button
Swivel on/off
Power timer button
Change timer duration

Power timer indicator

The slowly blinking LED indicator shows the time remaining until the power turns off.

○ : On ⟩○⟨ : Blinking ● : Off

Power timer off	● ● ● ●
1 hour	⟩○⟨ ● ● ●
2 hours	○ ⟩○⟨ ● ●
3 hours	○ ○ ⟩○⟨ ●
4 hours	○ ○ ○ ⟩○⟨

Wind speed indicator

The LED indicators show the current wind speed.

○ : On ● : Off

Wind speed 1	○ ● ● ●	Weak ↓ Strong
Wind speed 2	○ ○ ● ●	
Wind speed 3	○ ○ ○ ●	
Wind speed 4	○ ○ ○ ○	
Jet Mode	● ● ● ○ → (Lights flash from left to right)	

Notes:

- This product has an 18-hour auto-off function that automatically turns the power off when no operation is performed for 18 hours. This function cannot be deactivated.
- Automatic swivel is deactivated when using Jet Mode. If the swivel button is pushed while in Jet Mode, the product will make a “beep-beep-beep, beep-beep-beep” error sound. To deactivate Jet Mode, press the wind speed/Jet Mode button.
- The power timer functions as normal in Jet Mode and will turn off the power when the selected amount of time runs out.
- If the power is turned off while in Jet Mode, when the power is turned on again, the product will revert to the settings (wind speed, swivel on/off) used before activating Jet Mode.
- If the AC adapter is unplugged, when the power is turned on again, the product will revert to factory settings (wind speed 1, swivel off).

Manual Angle Adjustment

Separate from the automatic swivel function, the angle of the head can be manually adjusted up/down and left/right.

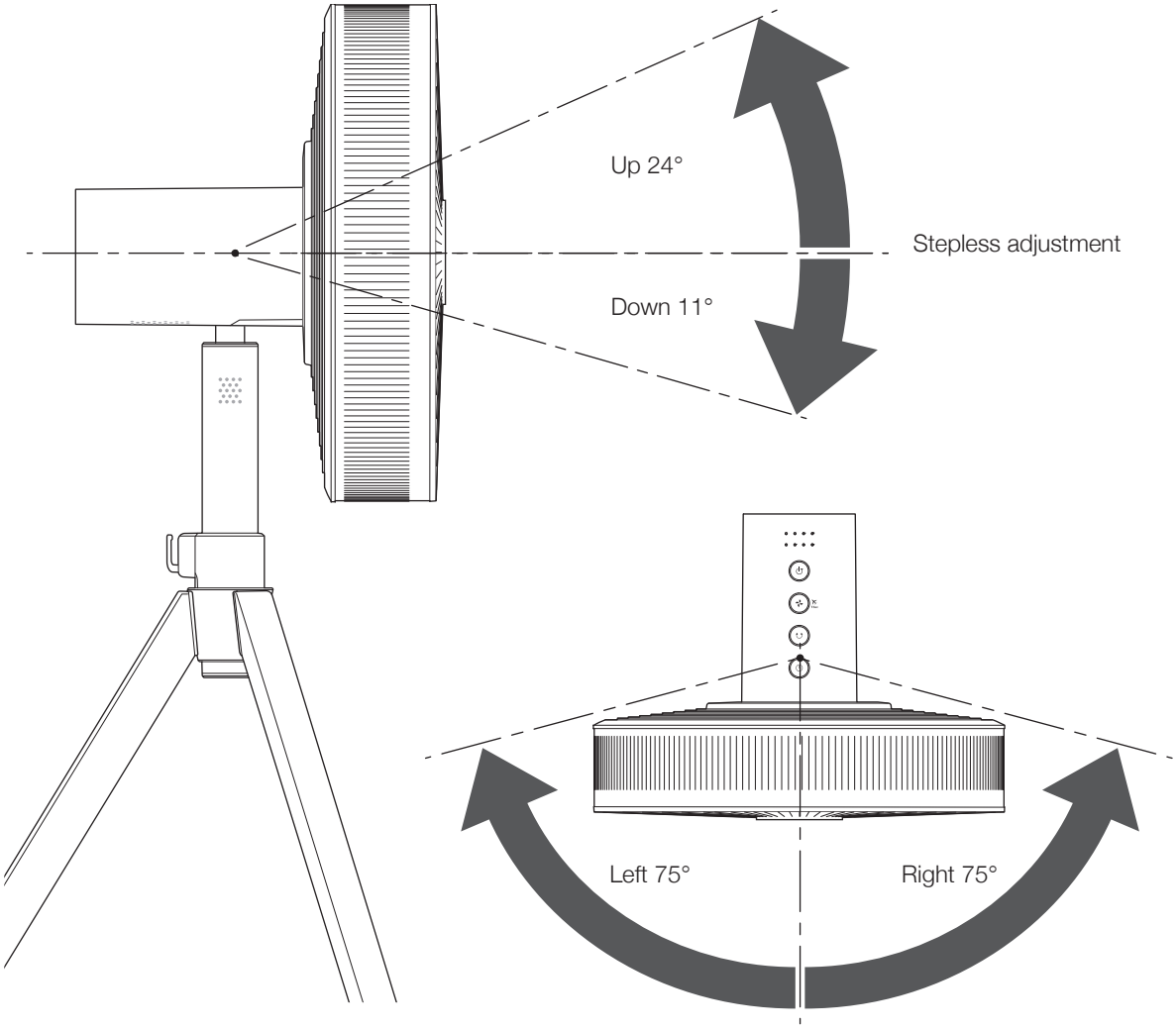

Note: Up/down angle adjustment is stepless.

- When manually adjusting the angle, do not try to move the head beyond the up/down or left/right ranges indicated above. Doing so may damage the product.
- When setting the swivel angle, make sure that the area around the product is clear of children. If a child is too near, when the product moves, it may hit the child's head or cause other injury.

Setting the Automatic Swivel Angle

The automatic swivel angle can be set by the user.

Set the swivel angle as follows. With automatic swivel turned on, rotate the head to set **point A (the starting point)** and then **point B (the ending point)**. After **point A** and **point B** are set, the head will automatically swivel between them.

The automatic swivel angle can be set to a maximum of 150°.

1 Press the swivel button to turn on automatic swivel.

Note: The automatic swivel angle can only be set while automatic swivel is turned on.

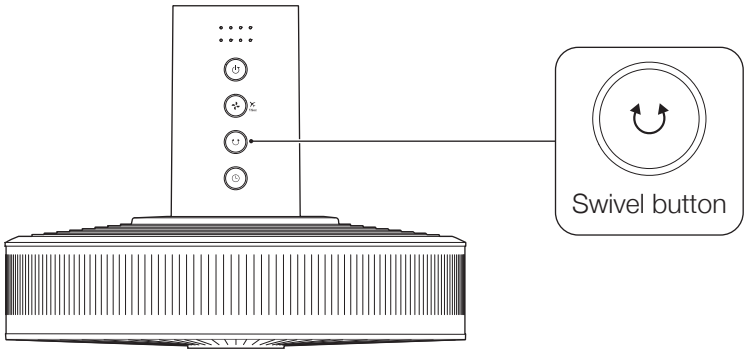

2 Grasp the side guard and quickly rotate the head to set point A.

Note: The left and right swivel angles can be set in either order.

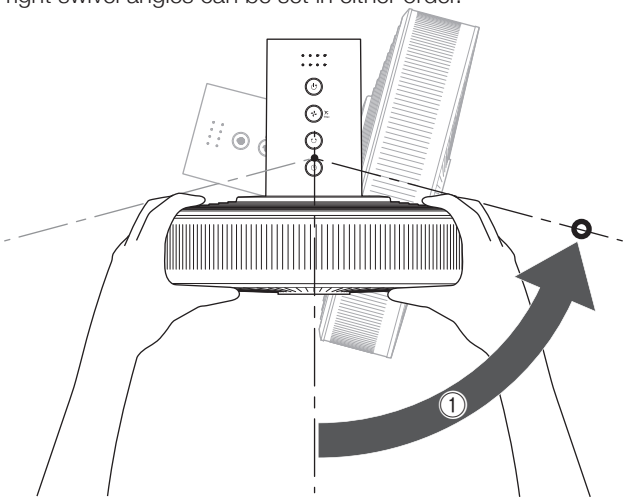

Notes:

- The automatic swivel angle factory setting is 80°. When the AC adapter is unplugged, the angle is reset to the 80° factory setting.
- If the head is held in a fixed position for too long while automatic swivel is turned on, or while setting the automatic swivel angle, a safety function will activate, stopping the fan. Deactivate the safety function by turning the power off and on again.

3 After setting **point A**, quickly rotate the head to the desired opposite position to set **point B**. An electronic tone indicates the completion of automatic swivel angle setting.

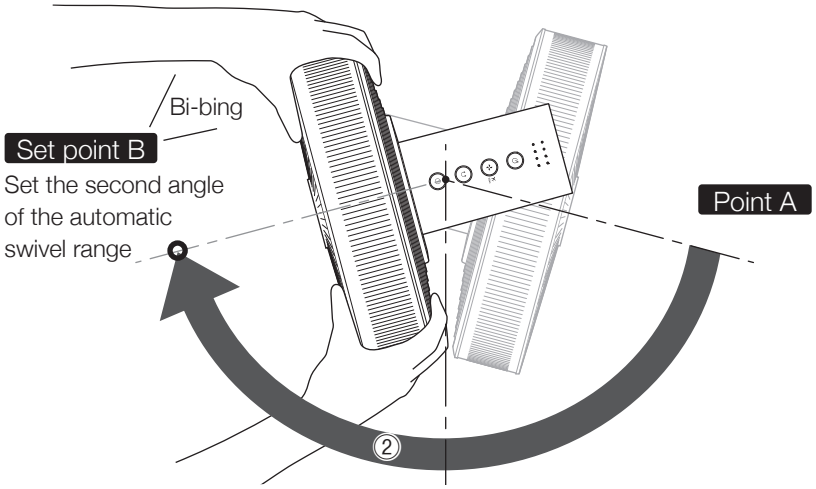

Notes:

- Set point B within five seconds of setting point A. If more than five seconds pass after setting point A, angle setting is canceled.
- When the power is turned off, the head will automatically return to the forward-facing position. When the power is turned on again, the head will begin to automatically swivel in the previously set swivel range.

The automatic swivel range can be set by the user.

Note: The minimum total swivel range is 30°. If the angle between point A and point B is narrower than 30°, the swivel angle will automatically correct to 30°.

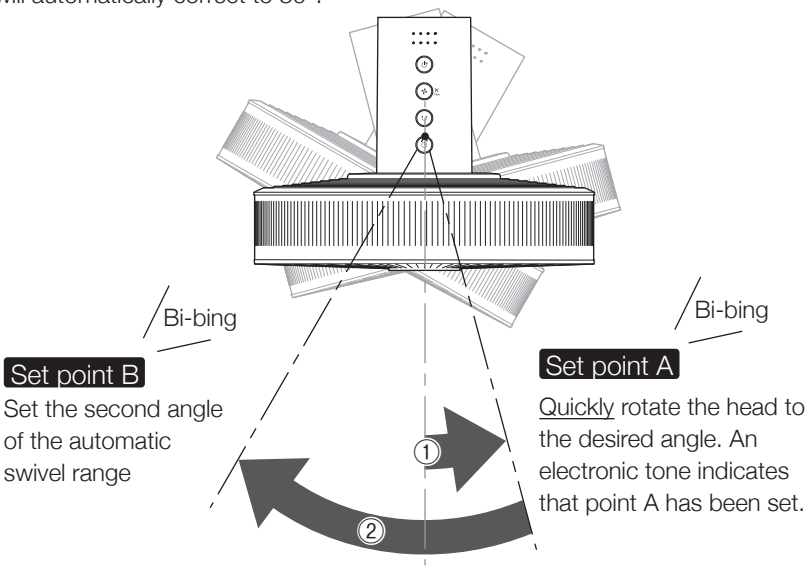

⚠ Automatic swivel is deactivated when using Jet Mode. If the swivel button is pushed while in Jet Mode, the product will make a “beep-beep-beep, beep-beep-beep” error sound. To deactivate Jet Mode, press the wind speed/Jet Mode button.

Maintenance Procedures / Disassembly for Storage

Maintenance should be performed every two weeks.

> ⚠ Always disconnect the AC adapter before performing maintenance.
> Take care when removing parts to avoid injury.

1 Remove the screw. Rotate the front fan guard in the direction indicated by arrow ①, then pull in the direction indicated by arrow ② to remove it.

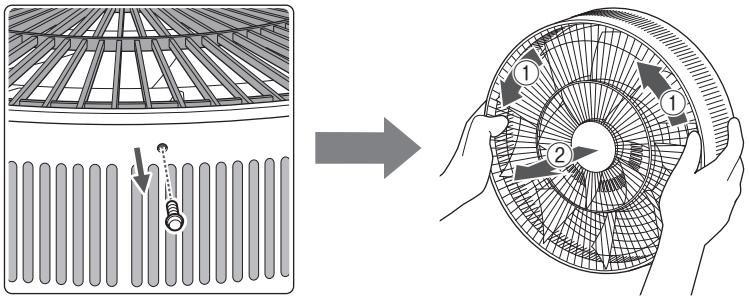

> ⚠ Take care not to lose the screw after removing it.

2 Loosen and remove the fan holder and guard holder.

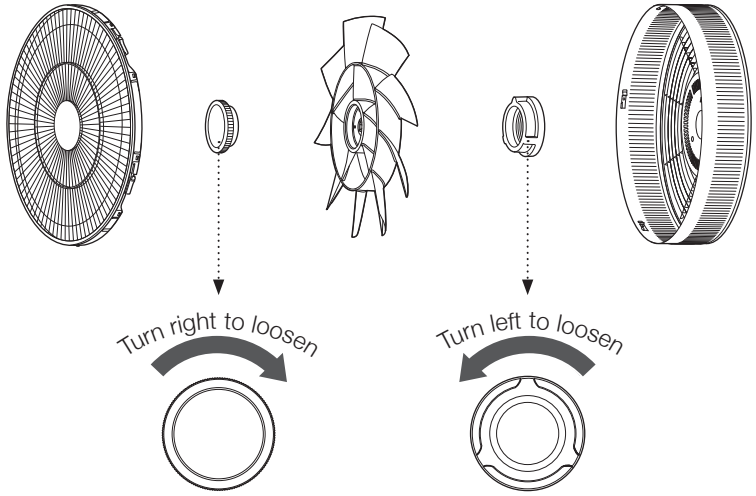

3 Remove the legs from the motor section.

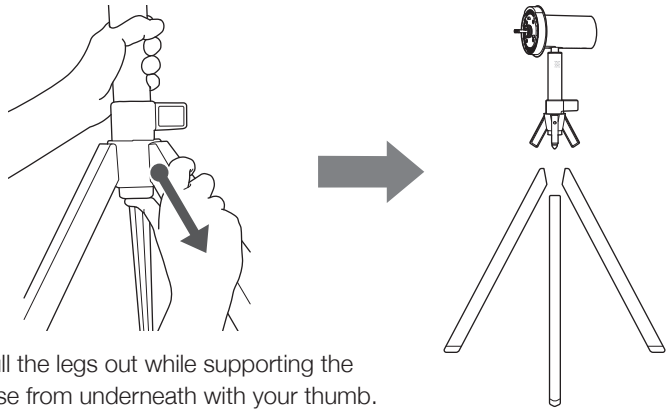

Gently pull the legs out while supporting the tripod base from underneath with your thumb.

⚠ When handling or attaching/detaching the legs, ensure that the surrounding space is clear of objects and people. Failure to do so may cause injury.

■ Washable parts

These parts can be washed in water using a soft cloth or sponge and dishwashing detergent.
Note: After washing, dry completely before use.



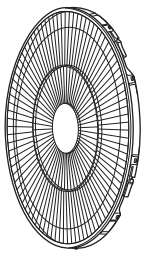

Front fan guard

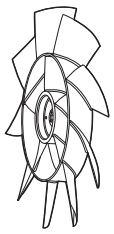

Fan blade

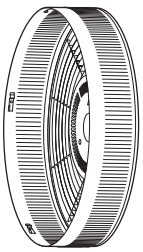

Side guard



Guard holder

■ Non-washable parts

Use a soft, dry cloth to gently wipe these parts.

Notes:

- Never wash the parts shown below with water.
- Do not use organic solvents such as benzine or thinners, abrasive cleaner alkaline detergents, or alcohol.



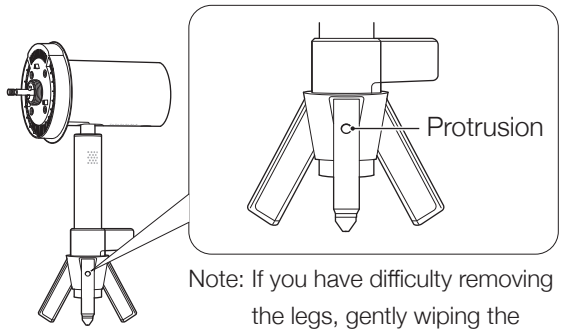

Motor section

Note: If you have difficulty removing the legs, gently wiping the tripod base protrusions with a soft, dry cloth may make them easier to remove.

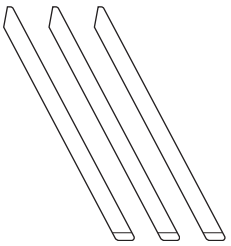

Legs



Fan holder

Troubleshooting

Use the information below to troubleshoot potential issues. If the issue persists, contact BALMUDA Support (p. 20).

Issue	● Points to check	▶ Solutions
You press the power button, but the fan blade does not spin	● Has a fuse blown/circuit breaker tripped in your home?	▶ Check your home's fuse box/circuit breaker.
	● Is the AC adapter correctly plugged into the outlet?	▶ Correctly plug in the AC adapter to the outlet.
	● Is the AC adapter plug fully inserted into the plug socket?	▶ Fully insert the AC adapter plug into the plug socket. (p. 9)
	● Is the fan blade attached backward?	▶ Attach the fan blade correctly. (p. 8)
The fan blade spins but makes an abnormally loud noise	● Is the fan blade firmly secured by the fan holder?	▶ Attach the fan blade correctly. (p. 8)
	● Is the fan blade attached backward?	▶ Attach the fan blade correctly. (p. 8)
	● Is the fan blade hitting the fan guard?	▶ Attach the fan blade and fan guard correctly. (p. 7)
The fan blade spins, but the airflow is weaker than before	● Is there dust on the fan blade or guards?	▶ Dust accumulation around the guards reduces airflow efficiency. Perform maintenance about once every two weeks. (p. 15)
The fan holder will not tighten	● Are you turning the fan holder in the correct direction when securing it?	▶ Turn the fan holder in the correct direction. Turn the fan holder counterclockwise to tighten it. (p. 8)
The product makes noise when automatic swivel is on	● Rattling sounds may briefly increase when automatic swivel is on.	▶ This sound is particular to the swivel motor and does not indicate a malfunction.
The automatic swivel range is skewed to one side	● Have you set the angles of the automatic swivel range?	▶ Set the angles of the automatic swivel range. (p. 13)
Operation stops by itself	● Is the power timer on?	▶ Check the power timer setting. (p. 11)
	● Have 18 hours passed since the last operation was performed?	▶ For safety, this product automatically turns off after 18 hours. (p. 11)
The fan blade shakes or wobbles	● Has the blade warning label been removed from the fan blade?	▶ The fan blade is designed to be balanced with the label attached.
		▶ The fan blade has multiple wings, which tends to accentuate shaking. All products are inspected before shipment.

Issue	● Points to check	▶ Solutions
An LED indicator is blinking	● Is the first indicator on the left in the power timer row (p. 11) blinking? 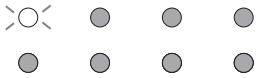	▶ The AC adapter is faulty, or a non-original AC adapter is attached. Detach the AC adapter, wait at least five seconds, and then reattach the original AC adapter. If the problem persists, contact BALMUDA Support. (p. 20)
	● Is the second indicator from the left in the power timer row (p. 11) blinking? 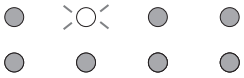	▶ The fan blade is not turning. Detach the AC adapter and check that the main unit is assembled correctly. (p. 7) Wait at least five seconds, then reattach the AC adapter. If the problem persists, contact BALMUDA Support. (p. 20)
	● Is the third indicator from the left in the power timer row (p. 11) blinking? 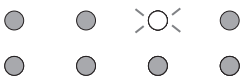	▶ The head is unable to swivel. Check that nothing is blocking the swiveling motion of the head. Disconnect the AC adapter, wait at least five seconds, then reattach it. If the problem persists, contact BALMUDA Support. (p. 20)
The head swivel range is narrower than you set it	● Has the AC adapter been unplugged from the main unit?	▶ When the AC adapter is unplugged, the automatic swivel range reverts to factory settings. (p. 13)
	● Is the main unit tilted?	▶ Place the main unit on a level surface.

Product Registration

Register your product to receive convenient product support and to sign up for news and exclusive offers.

Register here

https://us.balmuda.com/product-register

Disposal

Observe the regulations in your region when disposing of the product and its parts.

Product Specifications

Main unit

Model	AGR01US Series
Voltage	24 V ⎓
Power consumption	Max. 36 W
External dimensions (approx.)	Width (W) 23.6 in. × Depth (D) 20.5 in. × Height (H) 35.5 in.
Power timer	1, 2, 3, or 4 hours
Weight	Approx. 9.0 lb.
Applications	Household, indoor

- The indicated power consumption is that when using Jet Mode.
- Product specifications and appearance are subject to change without notice to improve the product.

AC adapter

Rated input voltage	100–240 V ∿
Rated frequency	50–60 Hz
Rated output voltage	24 V ⎓
Rated output current	2 A
Cord length	Approx. 9.8 ft.

Customer Support

BALMUDA SUPPORT

PHONE 833-333-1033

WEB https://us.balmuda.com

BALMUDA Inc. 5-1-21 Kyonancho, Musashino, Tokyo 180-0023, JAPAN
Importer: transcosmos America, Inc. 879 West 190th Street #410, Gardena, CA 90248
Note: Store this manual with great care.