Owner's Manual

Care and Operation

INSTALLER: Leave this manual with party responsible for use and operation.
OWNER: Retain this manual for future reference.

***NOTICE: DO NOT** discard this manual!*

outdoor lifestyles
by hearth & home technologies®

Model:

ODCOUG-36NR
ODCOUG-36TS
ODCOUG-42NR
ODCOUG-42TS

GAS-FIRED
C UL US
LISTED

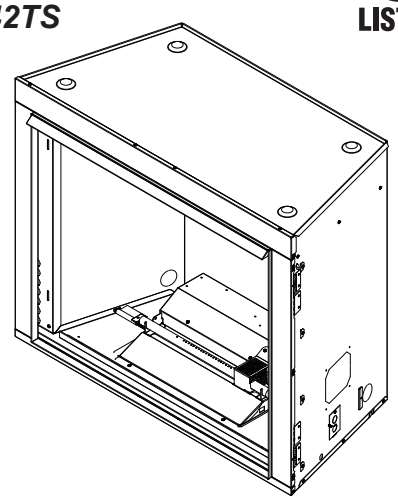

WARNING! Risk Of Fire!

Do not install glass doors on this appliance.

Glass doors could cause overheating of adjacent structures.

DANGER

FIRE OR EXPLOSION HAZARD

If you smell gas:

- Shut off gas to the appliance.
- Extinguish any open flame.
- If odor continues, leave the area immediately.
- After leaving the area, call your gas supplier or fire department.
- Failure to follow these instructions could result in fire or explosion, which could cause property damage, personal injury, or death.

WARNING

Do not store or use gasoline or other flammable vapors and liquids in the vicinity of this or any other appliance

An LP-cylinder not connected for use shall not be stored in the vicinity of this or any other appliance.

WARNING: For outdoor use only.
Installation and service must be performed by a qualified installer, service agency, or the gas supplier.

WARNING: Improper installation, adjustment, alteration, service or maintenance can cause injury or property damage. Read the installation, operating and maintenance instructions thoroughly before installing or servicing this equipment.

WARNING: If the information in this manual is not followed exactly, a fire or explosion may result causing property damage, personal injury, or loss of life.

DANGER

CARBON MONOXIDE HAZARD

This appliance can produce carbon monoxide which has no odor.

Using it in an enclosed space can kill you.

Never use this appliance in an enclosed space such as a camper, tent, car or home.

⚠Safety Alert Key:

- ***DANGER!*** *Indicates a hazardous situation which, if not avoided will result in death or serious injury.*
- ***WARNING!*** *Indicates a hazardous situation which, if not avoided could result in death or serious injury.*
- ***CAUTION!*** *Indicates a hazardous situation which, if not avoided, could result in minor or moderate injury.*
- ***NOTICE:*** *Used to address practices not related to personal injury.*

Table of Contents

1 Welcome
A. Congratulations 3
B. Limited Warranty.....4
2 Product Specific Information
A. Appliance Certification 6
B. BTU Specifications 6
C. Electrical Codes 6
D. Fuel 6
E. California 6
3 Important Safety and Operating Information
A. Appliance Safety.....7
B. General Operating Parts.....8
C. Fuel Specifications 8
D. Good Faith Wall Surface/TV Guidelines.....8
E. Before Lighting Appliance.....10
F. Lighting Instructions (IPI) 11
G. Appliance Break-in 12
H. Wall Control 12
I. Valve and Component Access 12
4 Maintenance and Service .....
A. Maintenance – Frequency and Tasks.....13
B. Maintenance Tasks – Homeowner 13
C. Maintenance Tasks – Qualified Service Technician 14
5 Frequently Asked Question and Troubleshooting
A. Frequently Asked Questions.....15
B. Troubleshooting 15
C. Troubleshooting – Control Panel 16
6 Reference Materials
▶ A. Accessories 17
B. Service Parts 18
C. Contact Information 26

1 Welcome

A. Congratulations

Congratulations on selecting the Courtyard outdoor gas appliance, an elegant and clean alternative to wood burning appliances. The Outdoor Lifestyles gas appliance you have selected is designed to provide the utmost in safety, reliability, and efficiency.

As the owner of a new appliance, you'll want to read and carefully follow all of the instructions contained in this owner's manual. Pay special attention to all cautions and warnings.

This owner's manual should be retained for future reference. We suggest that you keep it with your other important documents and product manuals. The information contained in this owner's manual, unless noted otherwise, applies to all models and gas control systems.

Your new Courtyard gas appliance will give you years of durable use and trouble-free enjoyment. Welcome to the Outdoor Lifestyles family of appliance products!

Local Dealer Information

Dealer: *Fill in your name, address, phone number and email information in the space provided.*

Dealer Name: _____
Address: _____
_____
Phone Number: _____
Email: _____

Appliance Information:
Brand: _____ *Model Name:* _____
Serial Number: _____ *Date Installed:* _____

Listing Label Information/Location

The model information regarding your specific appliance can be found on the rating plate usually located in the control area of the appliance.

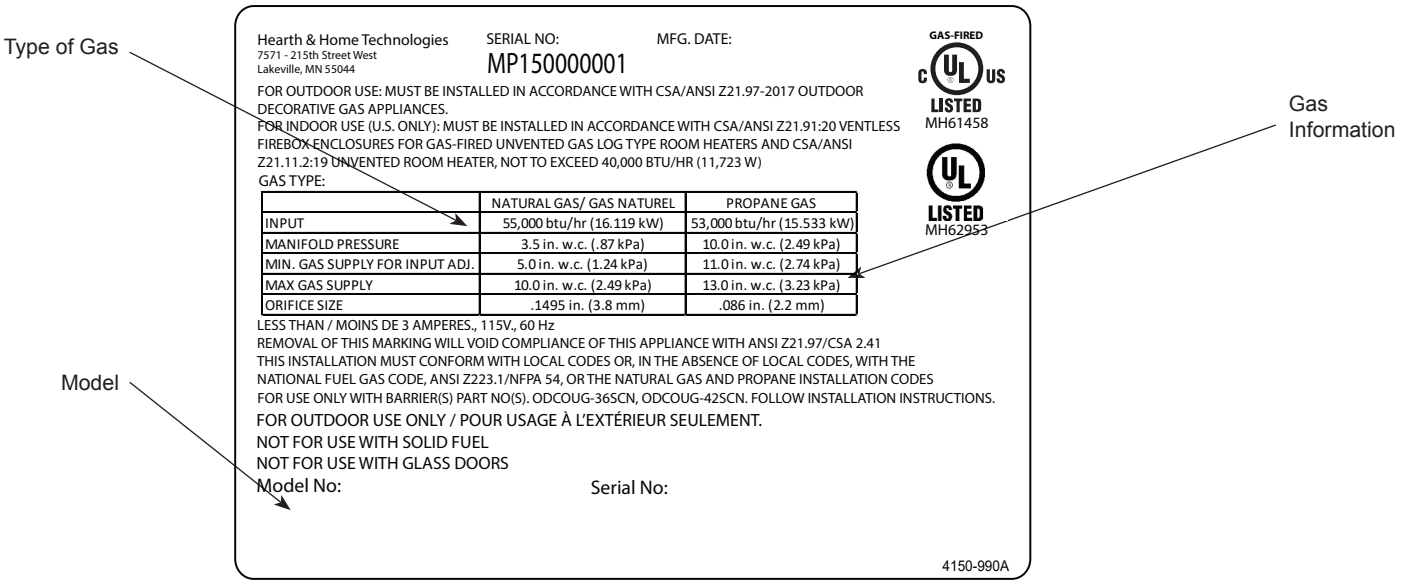

Hearth & Home Technologies
7571 - 215th Street West
Lakeville, MN 55044

SERIAL NO: MP150000001
MFG. DATE:

GAS-FIRED
C UL US LISTED MH61458
UL LISTED MH62953

FOR OUTDOOR USE: MUST BE INSTALLED IN ACCORDANCE WITH CSA/ANSI Z21.97-2017 OUTDOOR DECORATIVE GAS APPLIANCES.
FOR INDOOR USE (U.S. ONLY): MUST BE INSTALLED IN ACCORDANCE WITH CSA/ANSI Z21.91:20 VENTLESS FIREBOX ENCLOSURES FOR GAS-FIRED UNVENTED GAS LOG TYPE ROOM HEATERS AND CSA/ANSI Z21.11.2:19 UNVENTED ROOM HEATER, NOT TO EXCEED 40,000 BTU/HR (11,723 W)

GAS TYPE:

	NATURAL GAS/ GAS NATUREL	PROPANE GAS
INPUT	55,000 btu/hr (16.119 kW)	53,000 btu/hr (15.533 kW)
MANIFOLD PRESSURE	3.5 in. w.c. (.87 kPa)	10.0 in. w.c. (2.49 kPa)
MIN. GAS SUPPLY FOR INPUT ADJ.	5.0 in. w.c. (1.24 kPa)	11.0 in. w.c. (2.74 kPa)
MAX GAS SUPPLY	10.0 in. w.c. (2.49 kPa)	13.0 in. w.c. (3.23 kPa)
ORIFICE SIZE	.1495 in. (3.8 mm)	.086 in. (2.2 mm)

LESS THAN / MOINS DE 3 AMPERES., 115V., 60 Hz
REMOVAL OF THIS MARKING WILL VOID COMPLIANCE OF THIS APPLIANCE WITH ANSI Z21.97/CSA 2.41
THIS INSTALLATION MUST CONFORM WITH LOCAL CODES OR, IN THE ABSENCE OF LOCAL CODES, WITH THE NATIONAL FUEL GAS CODE, ANSI Z223.1/NFPA 54, OR THE NATURAL GAS AND PROPANE INSTALLATION CODES
FOR USE ONLY WITH BARRIER(S) PART NO(S). ODCOUG-36SCN, ODCOUG-42SCN. FOLLOW INSTALLATION INSTRUCTIONS.
FOR OUTDOOR USE ONLY / POUR USAGE À L'EXTÉRIEUR SEULEMENT.
NOT FOR USE WITH SOLID FUEL
NOT FOR USE WITH GLASS DOORS
Model No: Serial No:

4150-990A

B. Limited Warranty

Outdoor Lifestyles by Hearth & Home Technologies™
Limited Lifetime Warranty

Hearth & Home Technologies ("HHT") extends the following warranty for all Outdoor Lifestyles by HHT™ brand products ("Products") that are purchased from an HHT authorized dealer.

WARRANTY COVERAGE:

HHT warrants to the original owner of the Product at the site of installation, and to any transferee taking ownership of the Product at the site of installation within one year following the date of original purchase, that the Product will be free from defects in materials and workmanship at the time of manufacture. After installation, if covered components manufactured by HHT are found to be defective in materials or workmanship during the applicable warranty period, HHT will, at its option, repair or replace the covered components. This warranty is subject to conditions, exclusions and limitations as described below.

WARRANTY PERIOD:

The warranty period begins on the earlier of: (i) the date of invoice for the Product;
(ii) in the case of new home construction, the date of first occupancy of the residence or six months after the date of sale of the Product by an HHT authorized dealer, whichever occurs first; or (iii) the date 24 months following the date of Product shipment from HHT, regardless of the invoice or occupancy date.

WARRANTY CONDITIONS:

- The Limited Lifetime Warranty covers Products that are purchased through a HHT authorized dealer or distributor. A list of HHT authorized dealers is available on the HHT branded websites.
- This warranty is only valid while the Product remains at the site of original installation.
- Contact your installing dealer for warranty service. If the installing dealer is unable to provide necessary parts, contact the nearest HHT authorized dealer. Additional service fees may apply if you are seeking warranty service from a dealer other than the dealer from whom you originally purchased the Product.
- Check with your dealer in advance for any costs to you when arranging a warranty call. Travel and shipping charges for parts are not covered by this warranty.
- The Product body, metal firebox and heat exchanger carry the Limited Lifetime Warranty from the date of installation.
- The following components do not carry the Limited Lifetime Warranty but are warranted as follows:
  - One Year from Date of Installation:
    - Gas and Electrical Components or Gaskets
    - Nickel Plated Materials
      - Excludes tarnishing
    - Glass Breakage, Logs/Refractory/Glass Panels due to thermal breakage
      - Surface, hairline cracks, scratches and slight color changes are not covered
    - Venting, optional accessories, optional glass doors
    - Labor Associated with Warranty Service Work

WARRANTY EXCLUSIONS:

This warranty does not cover the following:

- Changes in surface finishes as a result of normal use. As a heating appliance, some changes in color of interior and exterior surface finishes may occur; this is not a flaw and not covered under warranty.
- Damage to printed, plated, or enameled surfaces caused by fingerprints, accidents, misuse, scratches, melted items, or other external sources and residues left on surfaces from the use of abrasive cleaners or polishes.
- Repair or replacement of parts that are subject to normal wear and tear during the warranty period. These parts include: paint, firebricks, grates, flame guides and the discoloration of glass.
- Minor expansion, contraction, or movement of certain parts causing noise. These conditions are normal and complaints related to this noise are not covered by this warranty.

Outdoor Lifestyles Warranty - 2108-975C – 6/5/2019 - 1

B. Limited Warranty *(continued)*

- Damages resulting from: (1) failure to install, operate, or maintain the Product in accordance with the installation instructions, operating instructions, and listing agent identification label furnished with the Product; (2) failure to install the Product in accordance with local building codes; (3) shipping or improper handling; (4) improper operation, abuse, misuse, continued operation with damaged, corroded or failed components, accident, or incorrectly performed repairs; (5) inadequate ventilation, negative pressure or environmental conditions, including, without limitation: hail, snow, ice, fallen branches, flooding, water damage and fading of color; (6) use of fuels other than those specified in the operating instructions; (7) installation or use of components not supplied with the Product or any other components not expressly authorized and approved by HHT; (8) modification of the Product not expressly authorized and approved by HHT in writing; and/or (9) interruptions or fluctuations of electrical power supply to the Product.
- Non-HHT venting components, hearth components or other accessories used in conjunction with the Product.
- Any part of a pre-existing fireplace system in which an insert or a decorative gas appliance is installed.
- The Product's capability to heat the desired space. Information is provided to assist the consumer and the dealer in selecting the proper appliance for the application. Consideration must be given to the Product's location and configuration and environmental conditions.

This warranty is void if:

- The Product has been over-fired or operated in atmospheres contaminated by chlorine, fluorine, or other damaging chemicals. Over-firing can be identified by, but not limited to, warped plates or tubes, rust colored cast iron, bubbling, cracking and discoloration of steel or enamel finishes and cracking or spalling of refractory or cementitious materials.
- The Product is subjected to prolonged periods of dampness, condensation, ice or snow.
- There is any damage to the Product or other components due to water or weather damage which is the result of, but not limited to, improper chimney or venting installation.

LIMITATIONS OF LIABILITY:

Repair or replacement in accordance with the provisions of this warranty will be the owner's exclusive remedy for and will constitute HHT's sole obligation under this warranty, under any other warranty (express or implied), or in contract, tort or otherwise; provided, however, that if HHT is unable to provide repair or replacement in an expedient and cost effective manner, HHT may discharge all such obligations by refunding the purchase price of the Product. No employee, agent, dealer, or other person is authorized to give any warranty on behalf of HHT. TO THE EXTENT ALLOWED BY LAW, HHT MAKES NO OTHER WARRANTY, EXPRESS OR IMPLIED, INCLUDING ANY WARRANTY OF MERCHANTABILITY OR FITNESS FOR A PARTICULAR PURPOSE. HHT WILL NOT BE LIABLE FOR ANY CONSEQUENTIAL OR INCIDENTAL DAMAGES ARISING OUT OF DEFECTS IN OR USE OF THE PRODUCTS. Some states do not allow exclusions or limitation of incidental or consequential damages, so these limitations may not apply to you. This warranty gives you specific rights; you also may have other rights, which vary from state to state. The duration of any implied warranty is limited to the duration of the warranty period specified herein.

2 Product Specific and Important Safety Information

A. Appliance Certification

MODEL: **ODCOUG-36NR; ODCOUG-36TS**
ODCOUG-42NR; ODCOUG-42TS
LABORATORY: **Underwriters Laboratories, Inc. (UL)**
TYPE: **Outdoor Decorative Gas Appliances**
STANDARD: **ANSI Z21.97-2017, CSA 2.41-2017**

This product is listed to ANSI standards for "Outdoor Decorative Gas Appliances" and "Gas Fired Appliances for Use at High Altitudes."

NOTICE: *This installation must conform with local codes. In the absence of local codes you must comply with the National Fuel Gas Code, ANSI Z223.1-latest edition in the U.S.A. and the CAN/CGA B149 Installation Codes in Canada.*

Installation and service of this appliance should be performed by qualified personnel. Hearth & Home Technologies recommends HHT Factory Trained or NFI certified professionals.

hearthED FACTORY TRAINING Fuel Your Fire

NFI NATIONAL FIREPLACE INSTITUTE® A CERTIFICATION AGENCY

NOTE: Installation and repair should be done by a qualified person. The appliance should be inspected before use and at least annually by a qualified person. More frequent cleaning may be required as necessary. It is imperative that the control compartment, burners, and circulating air passageways of the appliance are kept clean.

B. BTU Specifications

Model	Gas Type	Max Input BTU	Orifice Size	Burner Air Shutter
ODCOUG-36NR/TS ODCOUG-42NR/TS	Natural	55,000	#25 (.1495 in.)	1/16" Open
	Propane	53,000	#44 (.086 in.)	Fully Open

C. Electrical Codes

NOTICE: *This appliance must be electrically wired and grounded in accordance with local codes or, in the absence of local codes, with* **National Electric Code ANSI/NFPA 70-latest edition** *or the* **Canadian Electric Code CSA C22.1.**

- A 110-120 VAC circuit for this product must be protected with ground-fault circuit-interrupter protection, in compliance with the applicable electrical codes.

D. Fuel

This appliance must not be used to burn solid fuel.

When an appliance is connected to a fixed piping system, the installation must conform with local codes, or in the absence of local codes with the ***National Fuel Gas Code, ANSI Z223.1/NFPA 54, or International Fuel Gas Code.***

E. California

⚠ **WARNING: This product and the fuels used to operate this product (liquid propane or natural gas), and the products of combustion of such fuels, can expose you to chemicals including benzene, which is known to the State of California to cause cancer and reproductive harm. For more information go to: www.P65Warnings.ca.gov.**

3 Important Safety and Operating Information

A. Appliance Safety

WARNING! DO NOT operate appliance before reading and understanding operating instructions. *Failure to operate appliance according to operating instructions could cause fire or injury.*

WARNING

HOT SCREENS WILL CAUSE BURNS.
DO NOT TOUCH APPLIANCE UNTIL COOLED.
NEVER ALLOW CHILDREN TO TOUCH APPLIANCE.

- Keep children away.
- CAREFULLY SUPERVISE children in same room as appliance.
- Alert children and adults to hazards of high temperatures.

High temperatures may ignite clothing or other flammable materials.

- Clothing, furniture, draperies and other flammable materials must not be placed on or near the appliance.

Young children should be carefully supervised when they are in the same room as the appliance. Toddlers, young children and others may be susceptible to accidental contact burns.

- A physical barrier is recommended if there are at risk individuals in the house.
- To restrict access to an appliance, install an adjustable safety gate to keep toddlers, young children and other at risk individuals out of the room and away from hot surfaces.
- Install wall switch out of reach of children.
- Never leave a child alone near a hot appliance, whether operating or cooling down.
- Teach children to NEVER touch the appliance.
- Consider not using the appliance when children will be present.

Contact your dealer for more information, or visit: www.hpba.org/safety-information.

To prevent unintended operation when not using your appliance for an extended period of time (winter months, vacations, trips, etc:)

- Turn off wall controls.
- Turn off gas shutoff valve.
- Turn off GFCI protected circuit breaker.

Fire Screen

- Mesh screens are standard on the appliance
- Mesh screens can be opened or closed when in operation

Clear Space

WARNING! DO NOT place combustible objects in front of the appliance. *High temperatures could start a fire. See Figure 3.1 Avoid placing candles and other heat-sensitive objects on mantel or hearth. Heat could damage these objects.*

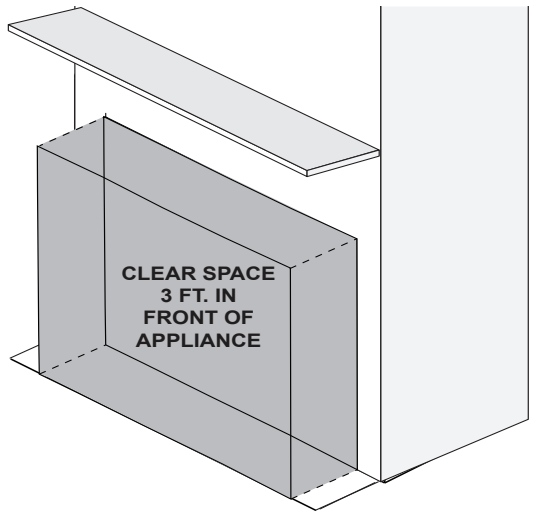

Figure 3.1. Clear Space Requirements

Over Firing

The appliance is considered to be over firing if the flames are contacting the top of the firebox. Call a qualified service technician to service the appliance.

B. General Operating Parts

Figure 3.2 references the general operating parts of the appliance.

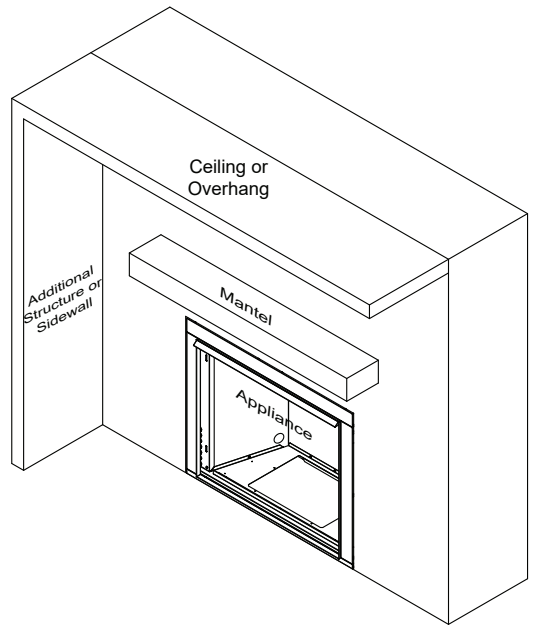

Figure 3.2. General Operating Parts

C. Fuel Specifications

WARNING! RISK OF FIRE OR EXPLOSION! *Appliance must be set up for compatible gas type!*

- This appliance is designed to operate on either natural gas or propane. Make sure the appliance is compatible with gas type selected for installation site.
- Conversions must be made by a qualified service technician using Hearth & Home Technologies specified and approved parts.

D. Good Faith Wall Surface/TV Guidelines

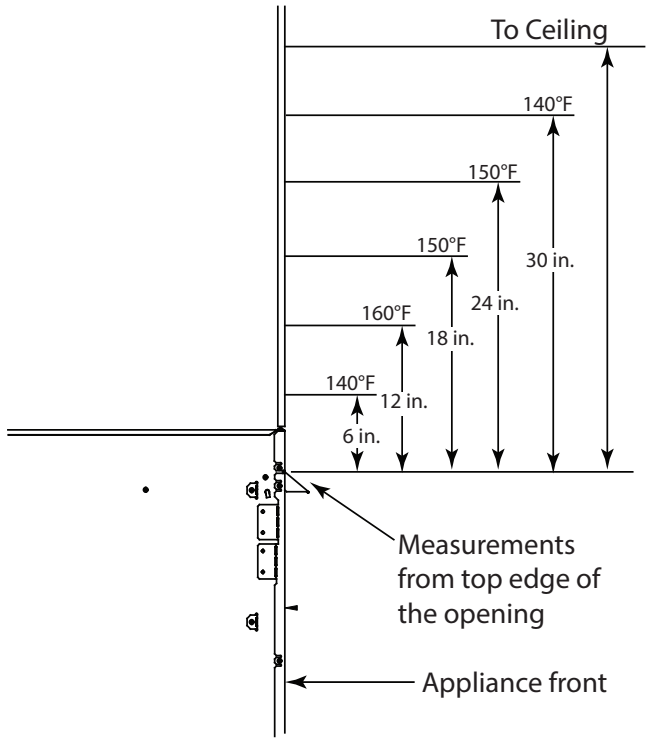

Figure 3.3. Good Faith Wall Surface Temperatures Above Appliance

Notice: *Temperatures listed above are taken with a temperature measuring probe as prescribed by the test standard used for appliance certification. Temperatures on walls or mantels taken with an infrared thermometer may yield increased temperatures of up to 30°F (17°C) or more depending on the thermometer settings and material characteristics being measured. Use appropriate finishing materials that are able to withstand these conditions. For additional finishing guidlines, see Section 7 in the appliance Installation Manual.*

Good Faith Guidelines for TV Installation's above a Typical Gas Appliance

Combustible Mantel	A
inch	20.00
mm	508
Non-Combustible Mantel	
inch	15.00
mm	381

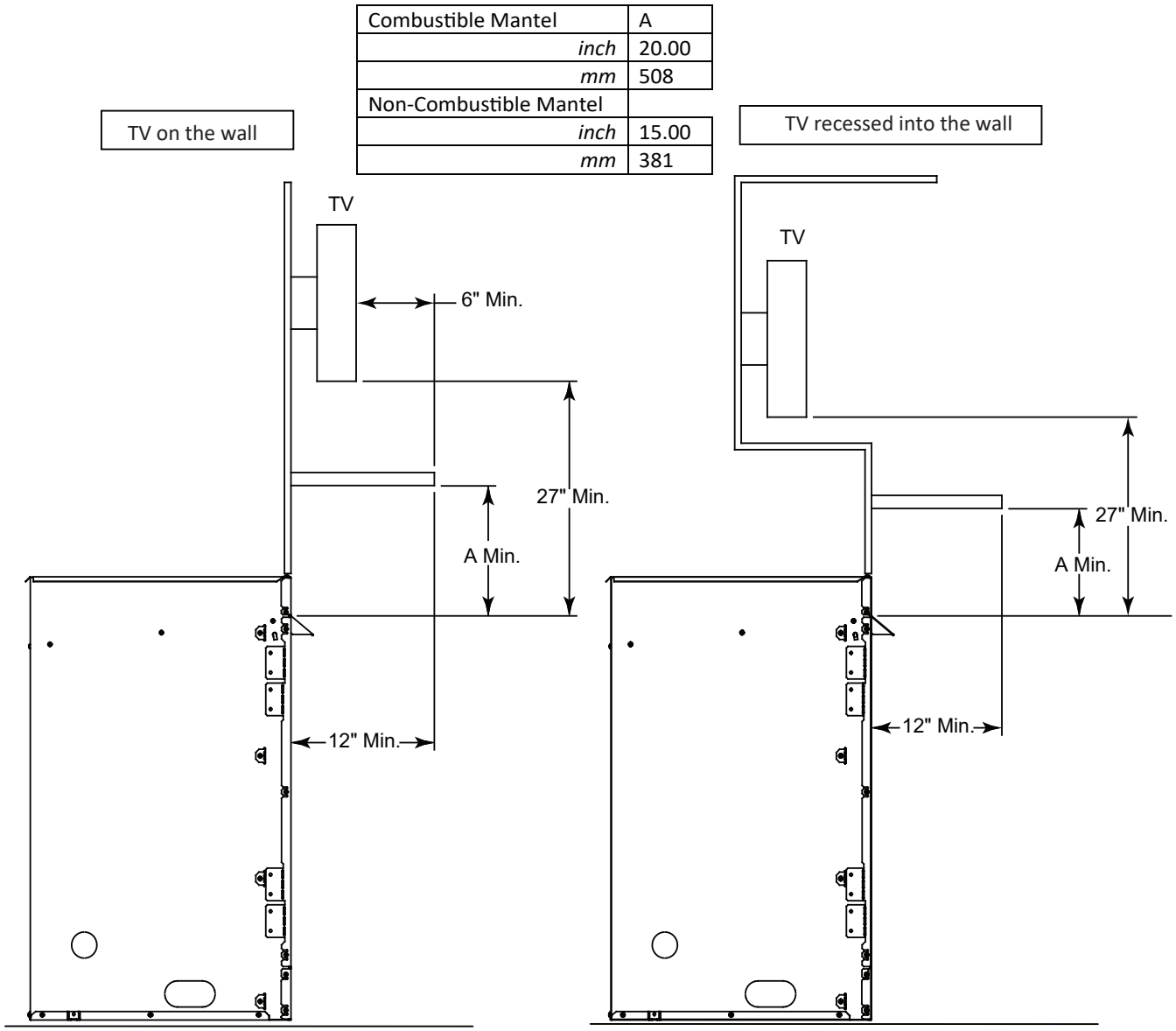

Notes:

1. These are good faith recommended clearances only and not a guarantee of compliance with all TV manufacturers' maximum allowable operating temperatures.
2. Since every installation has unique air flow characteristics and maximum allowable operating tempera tures can vary from manufacturer to manufacturer and from model to model, actual TV temperatures should be validated at the time of each installation. TVs should not be used in situations where the actual TV temperature exceeds the manufacturers' maximum allowable operating temperatures identified in the TV's technical specifications. Contact the TV's manufacturer directly if you cannot locate this information or have questions regarding the information.
3. Mantel height and depth must conform to mantel requirements specified in the installation manual.
4. "A" dimension taken from the top of the appliance opening.
5. Suggestions on how to further reduce TV temperatures:
   -Increase "A" and/or 27" minimum TV height dimensions.

Figure 3.4. Good Faith Clearances

E. Before Lighting Appliance

Before operating this appliance for the first time, **have a qualified service technician:**

- Verify all shipping materials have been removed from inside and/or underneath the firebox.
- Review proper placement of media, grates and logs.
- Check the wiring.
- Ensure there are no gas leaks.
- Remove all stainless steel coating material.

F. Lighting Instructions (IPI)

Lighting instructions may be found on the inside of the control compartment.

FOR YOUR SAFETY READ BEFORE LIGHTING

WARNING: If you do not follow these instructions exactly, a fire or explosion may result causing property damage, personal injury or loss of life.

A. This appliance is equipped with an intermittent pilot ignition (IPI) device which automatically lights the burner. **DO NOT** try to light the burner by hand.

B. BEFORE LIGHTING, smell all around the appliance area for gas. Be sure to smell next to the floor because some gas is heavier than air and will settle on the floor.

WHAT TO DO IF YOU SMELL GAS

- **DO NOT** try to light any appliance.
- **DO NOT** touch any electric switch; do not use any phone in your building.
- Immediately call your gas supplier from a neighbor's phone. Follow the gas supplier's instructions.
- If you cannot reach your gas supplier, call the fire department.

C. DO NOT use this appliance if any part has been under water. Immediately call a qualified service technician to inspect the appliance and to replace any part of the control system and any gas control which has been under water.

WARNING:

DO NOT CONNECT LINE VOLTAGE (110/120 VAC OR 220/240 VAC) TO THE CONTROL VALVE.

Improper installation, adjustment, alteration, service or maintenance can cause injury or property damage. Refer to the owner's information manual provided with this appliance.

This appliance needs fresh air for safe operation and must be installed so there are provisions for adequate combustion and ventilation air.

If not installed, operated, and maintained in accordance with the manufacturer's instructions, this product could expose you to substances in fuel or fuel combustion which are known to the State of California to cause cancer, birth defects, or other reproductive harm.

Keep burner and control compartment clean. See installation and operating instructions accompanying appliance.

CAUTION:

Hot while in operation. **DO NOT** touch. Keep children, clothing, furniture, gasoline and other liquids having flammable vapors away.

NOT FOR USE WITH SOLID FUEL

For use with natural gas and propane. A conversion kit, as supplied by the manufacturer, shall be used to convert this appliance to the alternate fuel.

For assistance or additional information, consult a qualified installer, service agency or the gas supplier.

For additional information on operating your Hearth & Home Technologies appliance, please refer to www.fireplaces.com.

LIGHTING INSTRUCTIONS (IPI)

1. This appliance is equipped with an ignition device which automatically lights the burner. **DO NOT** try to light the burner by hand.

GAS VALVE

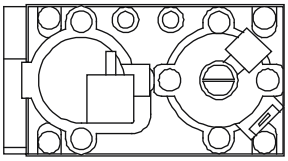

2. Wait five (5) minutes to clear out any gas. Then smell for gas, including near the floor. If you smell gas, STOP! Follow "B" in the Safety Information located on the left side of this label. If you do not smell gas, go to next step.
3. To light the burner:

   Equipped with wall control: Press ON button.
4. If the appliance does not light after three tries, call your service technician or gas supplier.

TO TURN OFF GAS TO APPLIANCE

1. Equipped with wall control: Press OFF button.
2. Service technician should turn off electric power to the control when performing service.

Final inspection by _____

G. Appliance Break-in

Initial Break-in Procedure

When you light the appliance, you may notice that it produces heat which does have an associated odor or smell. This appliance should be run three to four hours on the initial start-up. Turn it off and let it cool completely.

WARNING! Risk of Fire or Burns! *Provide adequate clearance for service access.* ***Due to high temperatures, the appliance should be located out of traffic and away from furniture and draperies.***

WARNING! DO NOT *place combustible objects in front of the appliance. High temperatures could start a fire.*

H. Wall Control

Wall Control Operation

The Courtyard series appliance comes standard with a push button ON/OFF switch. See Figure 3.5.

This switch toggles the On/Off function of the main burner

- On Position: Appliance will ignite main burner and run continuously.
- Off Position: Appliance main burner off

CAUTION! Risk of Electric Shock! *Avoid touching wires and electrical components in appliance control cavity.*

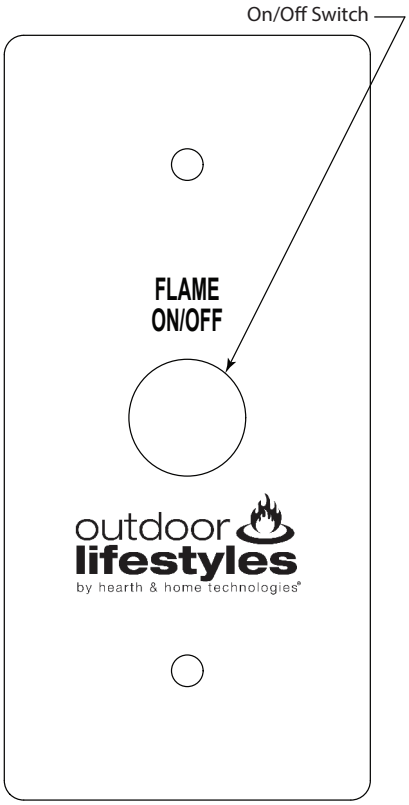

Figure 3.5. Wall Control Switch

I. Valve and Component Access

Gas valve and electrical components are located within the appliance valve compartment, beneath the burner and grate assembly. The Valve Access Cover must be removed to access components.

- To remove the Valve Access Cover, carefully lift the cover by the edges and pull forward out of the appliance, and set aside. It may be necessary to clear media from the cover.
- Gas valve and electrical components should now be accessible. See Figure 3.6.

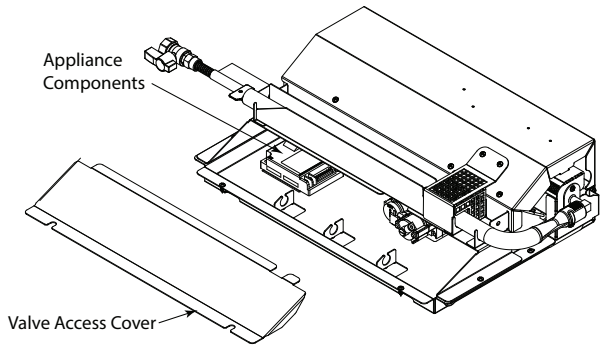

Figure 3.6. Valve Access

4 Maintenance and Service

Any safety screen or guard removed for servicing must be replaced prior to operating the appliance.

When properly maintained, your appliance will give you many years of trouble-free service. Contact your dealer to answer questions regarding proper operation, troubleshooting and service for your appliance. Visit www.hearthnhome.com to locate a dealer. We recommend annual service by a qualified service technician.

A. Maintenance – Frequency and Tasks

Task:	Frequency:	To be completed by:
Fire Screen or Optional Screen Front	Annually	Homeowner
Wall Control	Seasonally	
Media/Logs/Glass	Annually	Qualified Service Technician
Burner ignition and operation	Annually	Qualified Service Technician

Installation and repair should be done by a qualified service technician only. The appliance should be inspected before use and at least annually by professional service person.

B. Maintenance Tasks – Homeowner

CAUTION! Risk of Burns! *The appliance shall be turned off and cooled before servicing.*

The following tasks may be performed annually by the homeowner. If you are uncomfortable performing any of the listed tasks, please call your dealer for a service appointment.
More frequent cleaning may be required due to excessive dirt, dust, leaves, insects etc. It is imperative that control compartments, burners and circulating air passageways of the appliance be kept clean. Any safety screen, guard or barrier removed for servicing the appliance must be replaced prior to operating the appliance.

NOTE: If the appliance is installed on a screened porch, ensure the screen is kept clean to maintain proper airflow.

Fire Screen or Optional Screen Front

Frequency: Annually
By: Homeowner
Tools needed: Protective gloves

- Assess condition of screen mesh and replace as necessary.
- Inspect for scratches, dents or other damage that can lead to rust when exposed to weather. Repair as necessary.
- Vacuum and dust surfaces.

Wall Control

Frequency: Seasonally
By: Homeowner
Tools needed: None

- Verify operation of controls
  - On/Off

Cleaning the Media

Caution! Make sure the media is cool to the touch before removing media from the appliance.

During shipment of the media, dust and debris can accumulate. It is recommended that the media be rinsed thoroughly with water to remove dust and small particles. An easy method to clean the media is to place the media into a pail and rinse thoroughly. Spread the media out over paper towels and allow the media to dry before installing them into the appliance.

Cleaning the Appliance

Caution! Before cleaning make sure the appliance is cool and the power to the unit is turned off.

Using a stainless steel cleaner. Apply to a terry cloth and wipe appliance following the grain of the stainless. Do not spray cleaner directly into the appliance. Use caution while cleaning the mesh as the edges are sharp and may tear the cleaning cloth.

Note: During operation it is common that some sooting will occur on the logs as well as panels. This can be more prevalent with propane (LP). Clean soot from the appliance as frequently as

necessary to eliminate a buildup of soot or permanent discoloration.

C. Maintenance Tasks – Qualified Service Technician

The following tasks must be performed by a qualified service technician.

NOTICE: *Soot may accumulate on the pilot assembly and the area above the firebox opening. Periodic cleaning may be required.*

Burner Ignition and Operation

Frequency: Annually
By: Qualified Service Technician
Tools needed: Protective gloves, vacuum cleaner, whisk broom, flashlight, voltmeter, indexed drill set and a manometer.

- Check for smooth lighting and ignition carryover to all ports. Verify that there is no ignition delay.
- Inspect for lifting or other flame problems.
- Verify manifold and inlet pressures. Adjust regulator as required.
- Inspect pilot flame pattern and strength. Clean or replace orifice spud as necessary.
- Inspect pilot flame sensing rod for soot, corrosion and deterioration. Polish with fine steel wool or replace as required.
- Verify that there is not a short in flame sense circuit by checking continuity between pilot hood and flame sensing rod. Replace pilot as necessary.

5 Frequently Asked Question and Troubleshooting

A. Frequently Asked Questions

Courtyard Appliance

ISSUE	SOLUTION
Odor from appliance	When first operated, this appliance may release an odor for the first several hours. This is caused by the burning off of any oils remaining from manufacturing. Odor may also be released from finishing materials and adhesives used around the appliance.
Metallic noise	Noise is cause by metal expanding and contracting as it heats up and cools down, similar to the sound produced by a furnace or heating duct. This noise does not affect the operation or longevity of the appliance.
Wall above appliance feels hot to the touch	The area around, specifically above the firebox opening will become hot to the touch during operation. This is normal, no action is necessary.

Contact your dealer for additional information regarding operating and troubleshooting. Visit www.hearthnhome.com to locate a dealer

B. Troubleshooting

With proper installation, operation and maintenance your gas appliance will provide years of trouble-free service. If you do experience a problem, this troubleshooting guide will assist a qualified service technician in the diagnosis of a problem and the corrective action to be taken. This troubleshooting guide can only be used by a qualified service technician. Contact a dealer to arrange a service call by a qualified service technician.

IntelliFire™ Ignition System

SYMPTOM	POSSIBLE CAUSE	CORRECTIVE ACTION
Pilot Won't light. The ignition/module makes noise, but no spark.	Incorrect Wiring	Verify sensor wire (white) and igniter wire (orange) are connected to correct terminals on module and pilot assembly.
	Loose connections or electrical shorts in the wiring.	Verify no loose connections or electrical shorts in wiring from module to pilot assembly. Verify connections underneath pilot assembly are tight; also verify igniter and flame sense wires are not grounding out to metal chassis, pilot burner, pilot enclosure, mesh screen if present, or any other metal object.
	Ignitor gap is too large	Verify gap of igniter to right side of pilot hood. The gap should be approximately .17 in. or 1/8 in. (3 mm).
Pilot won't light. There is no noise or spark,	No power, transformer installed incorrectly.	Verify that transformer is installed and plugged into module. Check voltage of transformer at connection to module. Acceptable readings of a good transformer are between 3.2 and 2.8 volts AC.
	A shorted or loose connection in wiring configuration or wire harness.	Remove and reinstall the wiring harness that plugs into module. Verify there is a tight fit. Verify pilot assembly wiring to module. Remove and verify continuity of each wire in wiring harness. Replace any damaged components.
	Junction box Wiring	Verify that 110-120 VAC power is "ON" to junction box.
	Module not grounded	Verify black ground wire from module wire harness is grounded to metal chassis of appliance.

IntelliFire™ Ignition System *(Continued)*

Pilot sparks, but will not light.	Pilot shield covered with media.	Verify that the pilot shield is clear of all media. If covered, remove media and restart.
	Gas supply.	Verify that incoming gas line ball valve is “open”. Verify that inlet pressure reading is within acceptable limits.
	Ignitor gap is too large.	Verify gap of igniter to right side of pilot hood. The gap should be approximately .17 in. or 1/8 in. (3 mm).
	Module is not grounded.	Verify module is securely grounded to metal chassis of appliance.
	Pilot valve solenoid	Verify that 1.5 to 1.8 VDC is supplied to pilot solenoid from module. If below 1.5 volts, replace module. If 1.5 volts or greater, replace valve.
Pilot lights but continues to spark, and burner will not ignite. (If the pilot continues to spark after the pilot flame has been lit, flame rectification has not occurred.)	A short or loose connection in flame sensing rod.	Verify all connections to wiring diagram in manual. Verify connections underneath pilot assembly are tight. Verify connections are not grounding out to metal chassis, pilot burner, pilot enclosure or screen if present, or any other metal object.
	Poor flame rectification or contaminated flame sensing rod.	Verify correct pilot orifice is installed and gas inlet is set to pressure specifications. Check pilot for soot. Clean if necessary.
	Module is not grounded.	Verify module is securely grounded to metal chassis of appliance. Verify that wire harness is firmly connected to the module.
	Damaged pilot assembly or contaminated flame sensing rod	Verify that ceramic insulator around the flame sensing rod is not cracked, damaged, or loose. Verify connection from flame sensing rod to white sensor wire. Polish flame sensing rod with fine steel wool to remove any contaminants that may have accumulated on flame sensing rod. Verify continuity with a multimeter with ohms set at lowest range. Replace pilot if any damage is detected.
	Module	Turn wall control to OFF position. Remove ignitor wire “I” from module. Turn wall control to ON position. If there is no spark at “I” terminal module must be replaced. If there is a spark at “I” terminal, module is fine.

C. Troubleshooting – Control Panel

SYMPTOM	POSSIBLE CAUSE	CORRECTIVE ACTION
Appliance does not turn on when Control Panel on/off switch is depressed	No AC power to appliance	Check that GFCI breaker is operating as intended and is not tripped. Verify that AC power has been connected to the appliance. Ensure that the 3V IPI control module power supply are securely plugged into the appliance junction box.
	Faulty Wiring	Check appliance for loose/corroded connections or shorted wires.
	Control Panel Failure	Replace Control Panel

6 Reference Materials

A. Accessories

Drain Pans

- ODGSDP-36 — 36” Drain Pan
- ODGSDP-42 — 42” Drain Pan
- ODGSDPFLT-36 — 36” Drain Pan, Flat
- ODGSDPFLT-42 — 42” Drain Pan, Flat

LP Conversion Kit

- ODCOUG-NGK — Natural Gas Conversion Kit for Courtyard Appliance
- ODCOUG-LPK — Propane Conversion Kit for Courtyard Appliance

Controls

- WWT — Wired Wall Timer Kit

Optional Door Screen

- ODCOUG-36SCN — Framed mesh screen with canopy 36 in.
- ODCOUG-42SCN — Framed mesh screen with canopy 42 in.

Log Sets: (for use with GR-ODCOUG)

- SDLOGS-ODCOUG — Standard definition log set 36 in. & 42 in.
- HDLOGS-ODCOUG — High definition log set 36 in. & 42 in.

Grate: (for use with Log Sets)

- GR-ODCOUG — Stainless steel grate with lava rock 36 in./42 in.

Optional Liner Kits:

- ODCOUG-36GTR — 36” Gray Traditional Refractory Fiber
- ODCOUG-36GHR — 36” Gray Herringbone Refractory Fiber
- ODCOUG-42GTR — 42” Gray Traditional Refractory Fiber
- ODCOUG-42GHR — 42” Gray Herringbone Refractory Fiber
- ODCOUG-36BTR — 36” Brown Traditional Refractory Fiber
- ODCOUG-36BHR — 36” Brown Herringbone Refractory Fiber
- ODCOUG-42BTR — 42” Brown Traditional Refractory Fiber
- ODCOUG-42BHR — 42” Brown Herringbone Refractory Fiber
- ODCOUG-36SSL — 36” Stainless Steel Liner
- ODCOUG-42SSL — 42” Stainless Steel Liner
-

Miscellaneous:

- ODCOUG-VFP — Vent Free Plate

B. Service Parts

outdoor lifestyles
by hearth & home technologies®

Service Parts **ODCOUG-36TS, ODCOUG-36NR**

Beginning Manufacturing Date: May 2023

Courtyard 36” Outdoor Gas Fireplace **Ending Manufacturing Date: Active**

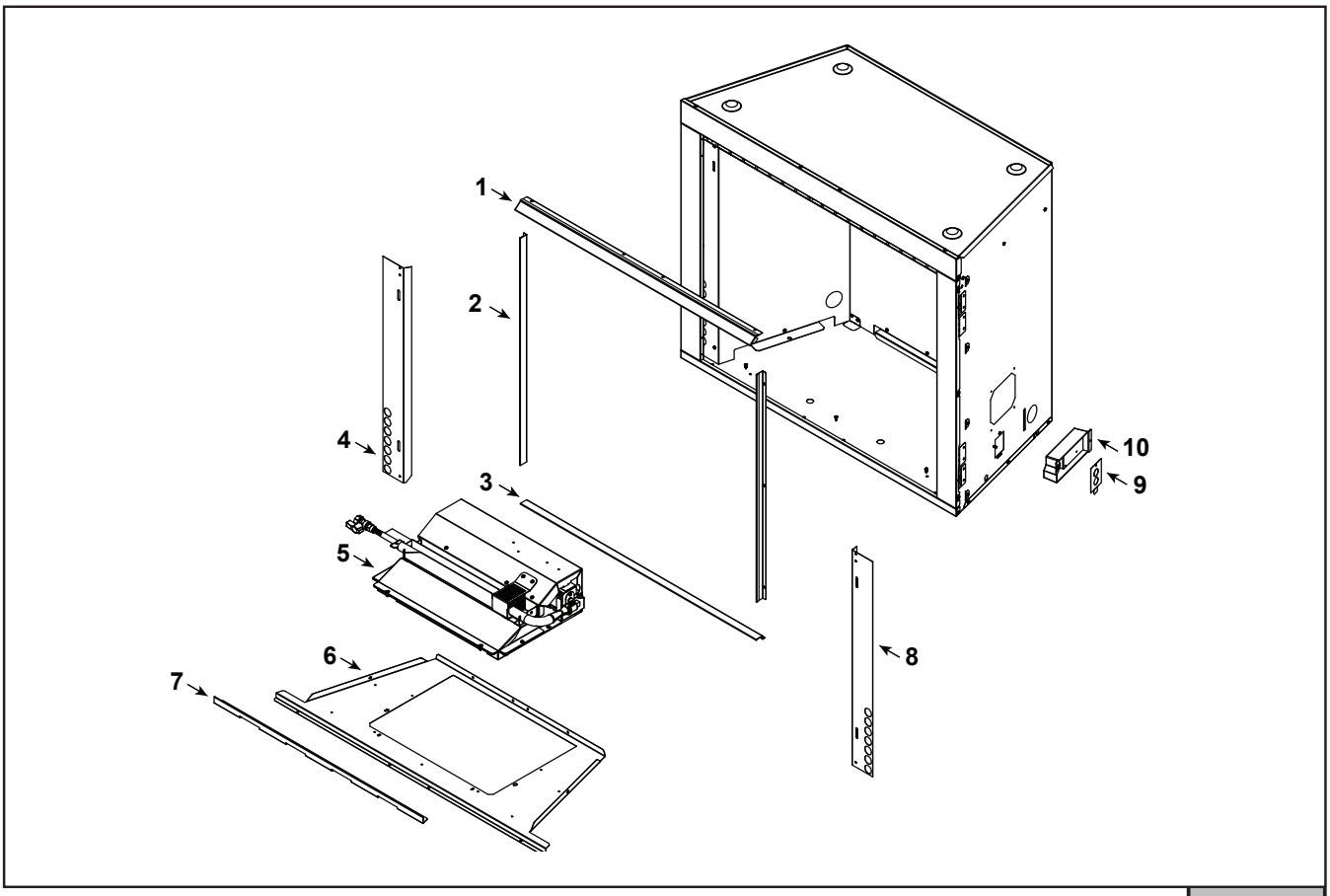

IMPORTANT: THIS IS DATED INFORMATION. Parts must be ordered from a dealer or distributor. **Hearth and Home Technologies does not sell directly to consumers**. Provide model number and serial number when requesting service parts from your dealer or distributor.

ITEM	DESCRIPTION	COMMENTS	PART NUMBER	Stocked at Depot
1	36” Combo Trim/Hood		SRV4150-171	
2	Finish Ring Side	Qty 2 req	SRV4150-166	
3	36” Finish Ring Bottom		SRV4150-165	
4	Column Cover, Left		SRV4150-164	
5	Burner Assembly		**See Following Pages**	
6	36” Firebox Bottom		SRV4150-129	
7	36” Media Retainer		SRV4150-168	
8	Column Cover, Right		SRV4150-163	
9	Junction Box Cover Plate		SRV4137-115	
10	Junction Box		SRV4021-013	**Y**
	Clamp Connector		SRV230-1670	
	Screen Rod	Qty 2 req	SRV4153-302	
	Firescreen SS	Qty 2 req	SRV4150-300	

Additional service part numbers appear on following page. 6/23

Service Parts ODCOUG-36TS, ODCOUG-36NR

Beginning Manufacturing Date: May 2023

Ending Manufacturing Date: Active

IMPORTANT: THIS IS DATED INFORMATION. Parts must be ordered from a dealer or distributor. **Hearth and Home Technologies does not sell directly to consumers**. Provide model number and serial number when requesting service parts from your dealer or distributor.

#5 Burner Assembly

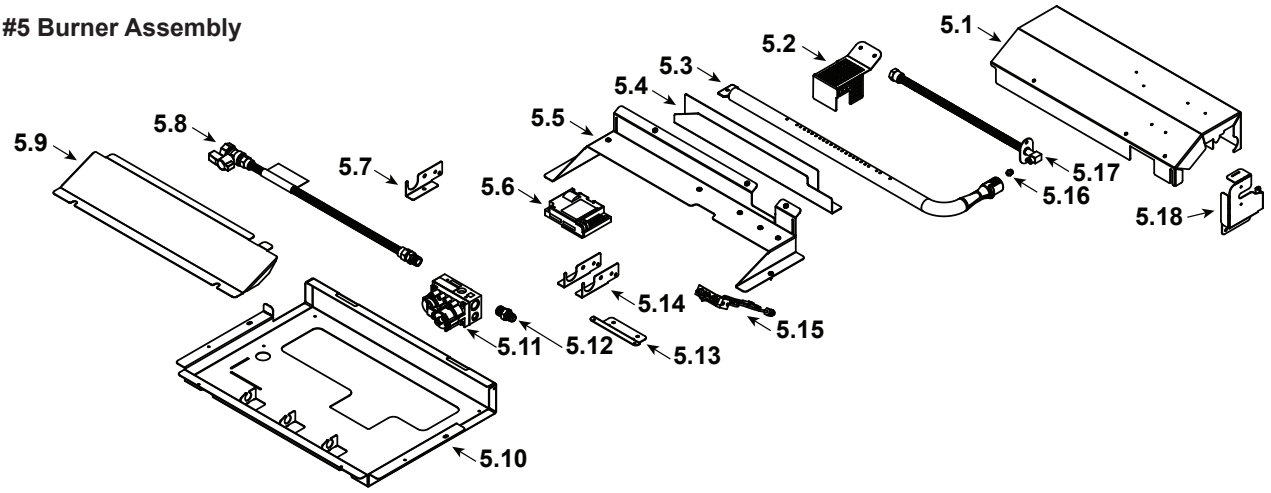

ITEM	DESCRIPTION	COMMENTS	PART NUMBER	Stocked at Depot
5	Burner Assembly		SRV4189-000	
5.1	Top Plate		SRV4189-103	
5.2	Pilot Shield		SRV4189-111	
5.3	Burner Tube Assembly		SRV4189-120	Y
5.4	Wind Shield		SRV4189-123	Y
5.5	Burner Base		SRV4189-101	
5.6	Control Module		SRV593-592	Y
5.7	Burner Support Left		SRV4189-106	
5.8	Flexline 18” w/Shutoff		SRV69D0030	Y
5.9	Access Cover		SRV4189-104	
5.10	Bottom Pan		SRV4189-102	
5.11	Valve Assembly	NG	SRV593-500	Y
		Propane	SRV593-501	Y
5.12	Male Connector	Pkg of 5	303-315/5	Y
5.13	Valve Bracket		SRV4189-110	
5.14	Burner Support, Right	Qty 2 req	SRV4189-109	
5.15	Pilot	NG	SRV593-512	Y
		Propane	SRV593-513	Y
5.16	Orifice, Burner	NG	SRV582-825	Y
		Propane	582-844	Y
5.17	Bulkhead w/Flextube		SRV2166-119	Y
5.18	Grate Bracket		SRV4189-108	
	Transformer, 3V		SRV593-593	Y
	Wire Assembly		SRV593-590	Y

Additional service part numbers appear on following page.

IMPORTANT: THIS IS DATED INFORMATION. Parts must be ordered from a dealer or distributor. **Hearth and Home Technologies does not sell directly to consumers**. Provide model number and serial number when requesting service parts from your dealer or distributor.

Stocked at Depot

#11 Refractory Assembly

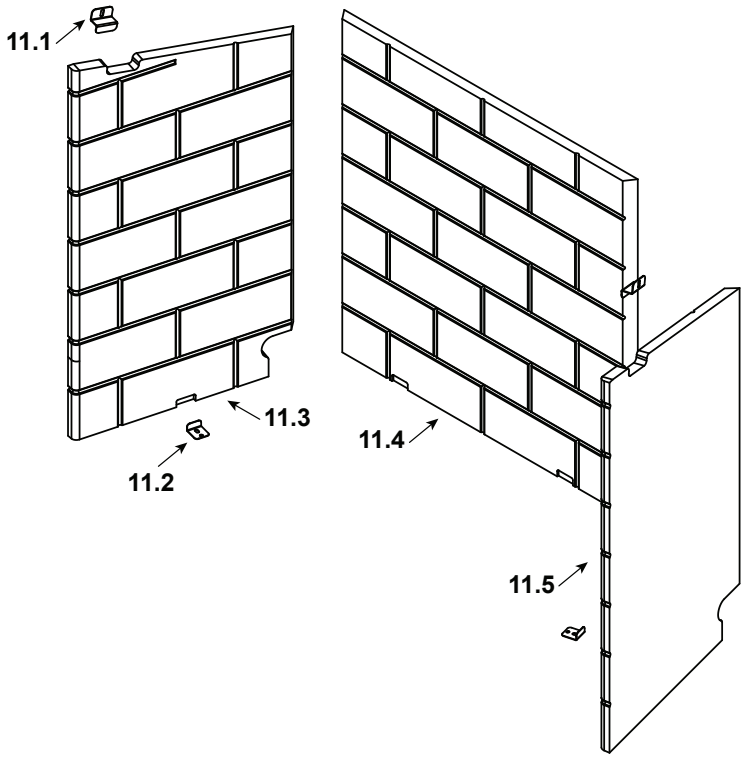

ITEM	DESCRIPTION	COMMENTS	PART NUMBER	Stocked at Depot
11.1	Refractory Bracket	Qty 2 req	SRV4137-116	
11.2	Refractory Bracket	Qty 2 req	SRV4137-147	
11.3	Refractory Left, Traditional Concrete		SRV4143-260	
11.4	Refractory Back, Traditional Concrete		SRV4143-259	
11.5	Refractory Right, Traditional Concrete		SRV4143-261	
	Refractory Bracket, SS	Qty 2 req	SRV4150-147	
	36” Gray Herringbone Refractory Kit		ODCOUG-36GHR	
	36” Gray Traditional Refractory Kit		ODCOUG-36GTR	
	36” Brown Herringbone Refractory Kit		ODCOUG-36BHR	
	36” Brown Traditional Refractory Kit		ODCOUG-36BTR	

Additional service part numbers appear on following page.

Service Parts ODCOUG-36TS, ODCOUG-36NR

Beginning Manufacturing Date: May 2023

Ending Manufacturing Date: Active

IMPORTANT: THIS IS DATED INFORMATION. Parts must be ordered from a dealer or distributor. **Hearth and Home Technologies does not sell directly to consumers**. Provide model number and serial number when requesting service parts from your dealer or distributor.

#12 Remote Accessory Kit

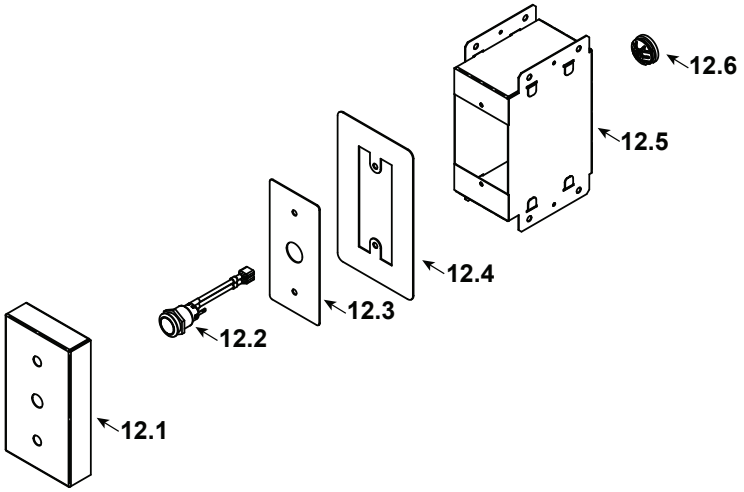

ITEM	DESCRIPTION	COMMENTS	PART NUMBER	Stocked at Depot
12	Remote Accessory Kit		SRV4189-001	
12.1	Rock Template		SRV4189-128	
12.2	Switch, Power		SRV4121-136	Y
12.3	Switch Cover Plate		SRV4189-127	
12.4	Trim Ring		SRV4018-336	
12.5	Switch Box		SRV4189-126	Y
12.6	Romex Connector		32536	
	Wall Switch Wire Assembly		SRV4189-129	Y
	Conversion Kit			
	NG Conversion Kit		ODCOUG-NGK	Y
	Orifice, #25C		SRV582-825	Y
	Pilot Orifice, NG		SRV593-528	Y
	Regulator, NG		SRVNGK-DXF	Y
	Propane Conversion Kit		ODCOUG-LPK	Y
	Orifice, #44C		582-844	Y
	Pilot Orifice, Propane		SRV593-527	Y
	Regulator, Propane		SRVLPK-DXF	Y

Service Parts **ODCOUG-42TS, ODCOUG-42NR**

Beginning Manufacturing Date: May 2023

Courtyard 42” Outdoor Gas Fireplace **Ending Manufacturing Date: Active**

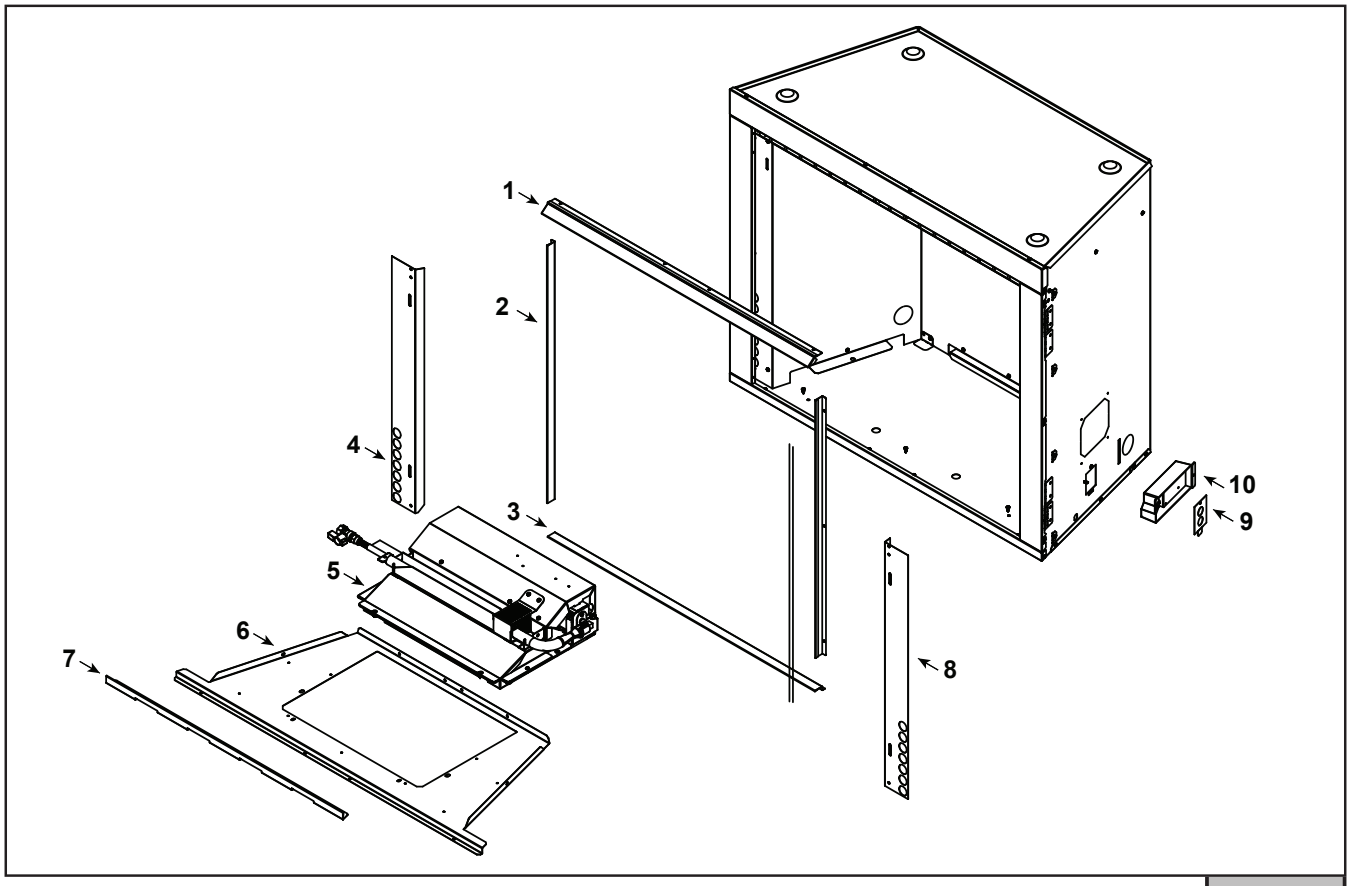

IMPORTANT: THIS IS DATED INFORMATION. Parts must be ordered from a dealer or distributor. **Hearth and Home Technologies does not sell directly to consumers**. Provide model number and serial number when requesting service parts from your dealer or distributor.

ITEM	DESCRIPTION	COMMENTS	PART NUMBER	Stocked at Depot
1	42” Combo Trim/Hood		SRV4151-171	
2	Finish Ring Side	Qty 2 req	SRV4150-166	
3	42” Finish Ring Bottom		SRV4151-165	
4	Column Cover, Left		SRV4150-164	
5	Burner Assembly		**See Following Pages**	
6	42” Firebox Bottom		SRV4151-129	
7	42” Media Retainer		SRV4151-168	
8	Column Cover, Right		SRV4150-163	
9	Junction Box Cover Plate		SRV4137-115	
10	Junction Box		SRV4021-013	**Y**
	Clamp Connector		SRV230-1670	
	Screen Rod	Qty 2 req	SRV4153-302	
	Firescreen SS	Qty 2 req	SRV4150-300	

Additional service part numbers appear on following page. 6/23

Service Parts **ODCOUG-42TS, ODCOUG-42NR**

Beginning Manufacturing Date: May 2023

Ending Manufacturing Date: Active

IMPORTANT: THIS IS DATED INFORMATION. Parts must be ordered from a dealer or distributor. **Hearth and Home Technologies does not sell directly to consumers**. Provide model number and serial number when requesting service parts from your dealer or distributor.

#5 Burner Assembly

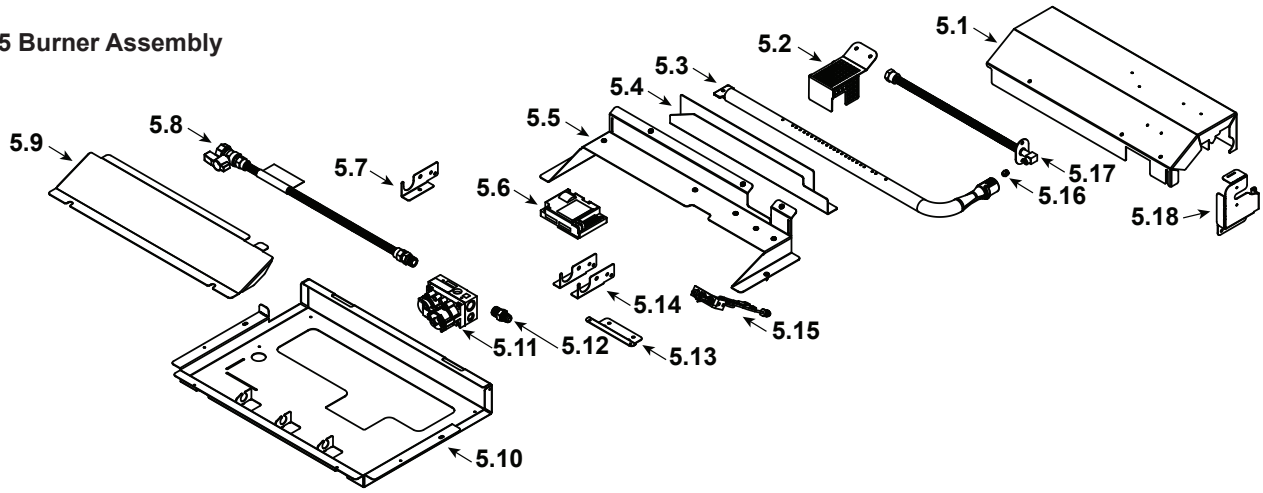

ITEM	DESCRIPTION	COMMENTS	PART NUMBER	Stocked at Depot
5	Burner Assembly		SRV4189-000	
5.1	Top Plate		SRV4189-103	
5.2	Pilot Shield		SRV4189-111	
5.3	Burner Tube Assembly		SRV4189-120	Y
5.4	Wind Shield		SRV4189-123	Y
5.5	Burner Base		SRV4189-101	
5.6	Control Module		SRV593-592	Y
5.7	Burner Support Left		SRV4189-106	
5.8	Flexline 18” w/Shutoff		SRV69D0030	Y
5.9	Access Cover		SRV4189-104	
5.10	Bottom Pan		SRV4189-102	
5.11	Valve Assembly	NG	SRV593-500	Y
		Propane	SRV593-501	Y
5.12	Male Connector	Pkg of 5	303-315/5	Y
5.13	Valve Bracket		SRV4189-110	
5.14	Burner Support, Right	Qty 2 req	SRV4189-109	
5.15	Pilot	NG	SRV593-512	Y
		Propane	SRV593-513	Y
5.16	Orifice, Burner	NG	SRV582-825	Y
		Propane	582-844	Y
5.17	Bulkhead w/Flextube		SRV2166-119	Y
5.18	Grate Bracket		SRV4189-108	
	Transformer, 3V		SRV593-593	Y
	Wire Assembly		SRV593-590	Y

Additional service part numbers appear on following page.

Service Parts **ODCOUG-42TS, ODCOUG-42NR**

Beginning Manufacturing Date: May 2023

Ending Manufacturing Date: Active

IMPORTANT: THIS IS DATED INFORMATION. Parts must be ordered from a dealer or distributor. **Hearth and Home Technologies does not sell directly to consumers**. Provide model number and serial number when requesting service parts from your dealer or distributor.

Stocked at Depot

#11 Refractory Assembly

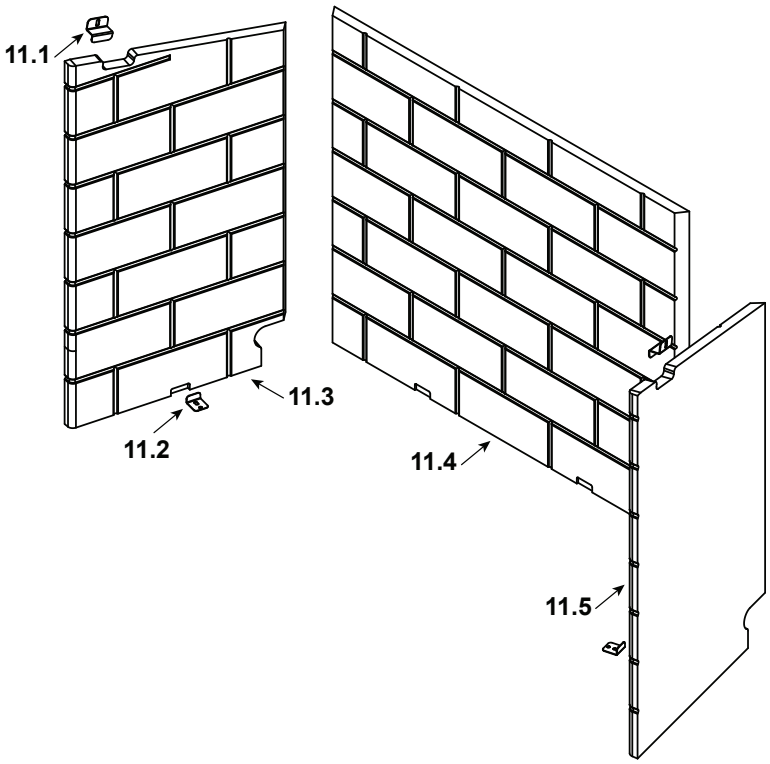

ITEM	DESCRIPTION	COMMENTS	PART NUMBER	Stocked at Depot
11.1	Refractory Bracket	Qty 2 req	SRV4137-116	
11.2	Refractory Bracket	Qty 2 req	SRV4137-147	
11.3	Refractory Left, Traditional Concrete		SRV4143-260	
11.4	Refractory Back, Traditional Concrete		SRV4144-259	
11.5	Refractory Right, Traditional Concrete		SRV4143-261	
	Refractory Bracket, SS	Qty 2 req	SRV4150-147	
	42” Gray Herringbone Refractory Kit		ODCOUG-42GHR	
	42” Gray Traditional Refractory Kit		ODCOUG-42GTR	
	42” Brown Herringbone Refractory Kit		ODCOUG-42BHR	
	42” Brown Traditional Refractory Kit		ODCOUG-42BTR	

Additional service part numbers appear on following page.

Service Parts **ODCOUG-42TS, ODCOUG-42NR**

Beginning Manufacturing Date: May 2023

Ending Manufacturing Date: Active

IMPORTANT: THIS IS DATED INFORMATION. Parts must be ordered from a dealer or distributor. **Hearth and Home Technologies does not sell directly to consumers**. Provide model number and serial number when requesting service parts from your dealer or distributor.

#12 Remote Accessory Kit

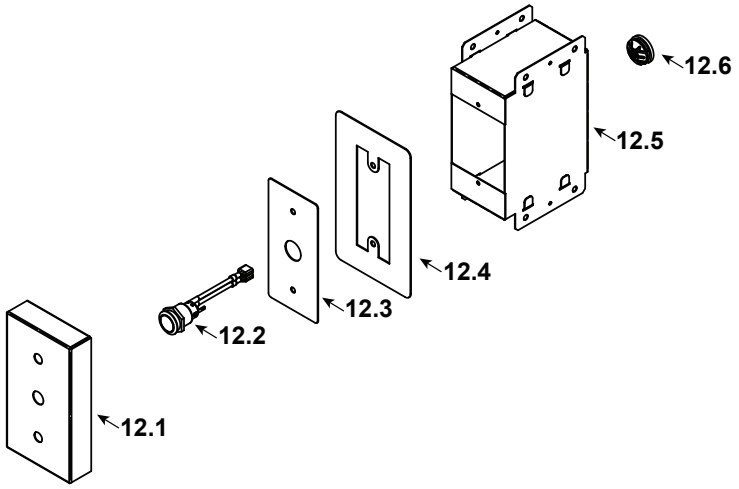

ITEM	DESCRIPTION	COMMENTS	PART NUMBER	Stocked at Depot
12	Remote Accessory Kit		SRV4189-001	
12.1	Rock Template		SRV4189-128	
12.2	Switch, Power		SRV4121-136	Y
12.3	Switch Cover Plate		SRV4189-127	
12.4	Trim Ring		SRV4018-336	
12.5	Switch Box		SRV4189-126	Y
12.6	Romex Connector		32536	
	Wall Switch Wire Assembly		SRV4189-129	Y
	Conversion Kit			
	NG Conversion Kit		ODCOUG-NGK	Y
	Orifice, #27C		SRV582-825	Y
	Pilot Orifice, NG		SRV593-528	Y
	Regulator, NG		SRVNGK-DXF	Y
	Propane Conversion Kit		ODCOUG-LPK	Y
	Orifice, #45C		582-844	Y
	Pilot Orifice, Propane		SRV593-527	Y
	Regulator, Propane		SRVLPK-DXF	Y

C. Contact Information

Outdoor Lifestyles, a brand of Hearth & Home Technologies
7571 215th Street West, Lakeville, MN 50044
www.hearthnhome.com

Please contact your Outdoor Lifestyles dealer with any questions or concerns.
For the location of your nearest Outdoor Lifestyles dealer,
please visit www.hearthnhome.com.

– NOTES –

NOTICE		
Important operating and maintenance instructions included.	Read, understand and follow these instructions for safe installation and operation.	Leave this manual with party responsible for use and operation.

This product may be covered by one or more of the following patents: (United States) 6601579, 6769426, 6863064, 7077122, 7074035, 7098269, 7234932, 7258116, 7322819, 7422011, 7470729, 7726300, 8147240, 9625149 or other U.S. and foreign patents pending.

2000-945E

Printed in U.S.A. - Copyright 2014