Form No. 3457-126 Rev B

Light Kit

Greensmaster® 1000 Series Mower

Model No. 04135

Installation Instructions

Installation

Loose Parts

Use the chart below to verify that all parts have been shipped.

Procedure	Description	Qty.	Use
1	No parts required	–	Prepare the machine.
2	LED light Light mount Mount cap Bolt (3/8 inch) Bolt (5/16 inch) Nut (3/8 inch) Nut (5/16 inch)	2 2 2 2 2 2 2	Install the lights.
3	Wire harness	1	Install the wire harness.
4	Switch	1	Install the switch.

If you install this kit to a Model 04860 or 04861 traction unit, ensure that the part number for the kit wire harness is 122-2178.

If you have an older wire harness (Part Number 122-1418), replace it with the new wire harness (Part Number 122-2178); refer to your authorized Toro distributor for the new wire harness.

1

Preparing the Machine

No Parts Required

Procedure

1. Park the machine on a level surface.
2. Engage the parking brake.
3. Shut off the engine.
4. Remove the spark-plug wire from the spark plug; refer to your machine *Operator's Manual*.

© 2023—The Toro® Company
8111 Lyndale Avenue South
Bloomington, MN 55420

Register at www.Toro.com.

Original Instructions (EN)
Printed in the USA
All Rights Reserved

3457-126

2

Installing the Lights

Parts needed for this procedure:

2	LED light
2	Light mount
2	Mount cap
2	Bolt (3/8 inch)
2	Bolt (5/16 inch)
2	Nut (3/8 inch)
2	Nut (5/16 inch)

Procedure

1. Use 2 bolts (3/8 inch), 2 bolts (5/16 inch), 2 nuts (3/8 inch), and 2 nuts (5/16 inch) to secure the light mounts to the machine frame (Figure 1).
2. Install the mount caps onto the mounts (Figure 1).
3. Use the washers and nuts provided with each LED light to secure the lights to the mounts (Figure 1).

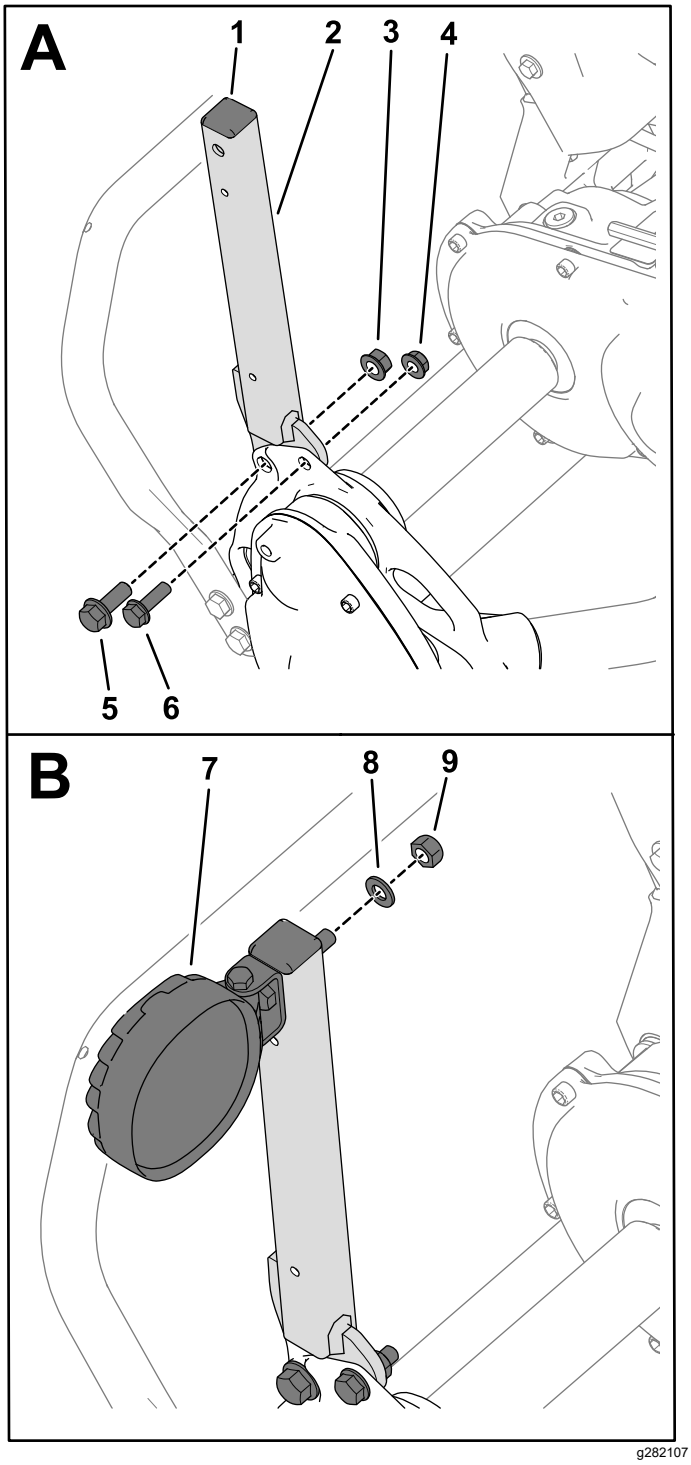

Figure 1

1. Mount cap
2. Light mount
3. Nut (3/8 inch)
4. Nut (5/16 inch)
5. Bolt (3/8 inch)
6. Bolt (5/16 inch)
7. LED light
8. Washer—LED light assembly
9. Nut—LED light assembly

3

Installing the Wire Harness

Parts needed for this procedure:

1	Wire harness

Procedure

Refer to Figure 2 for this procedure.

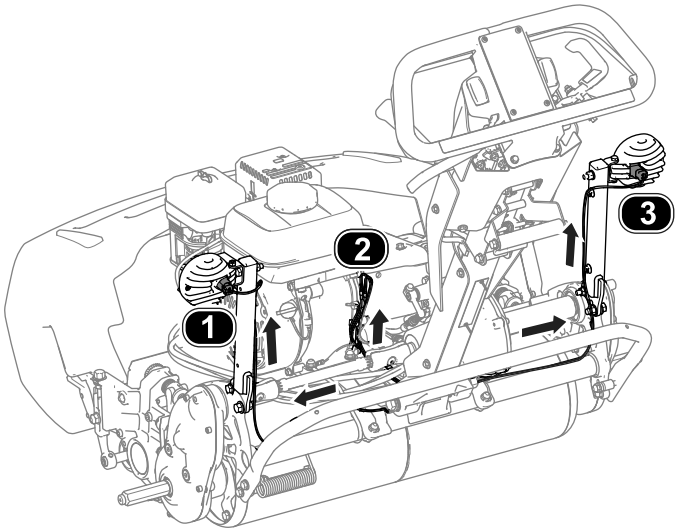

g290476

Figure 2

1. P02 (wire harness) to left light
2. Refer to step 3.
3. P01 (wire harness) to right light

1. Connect the wire-harness end labeled P02 to the light on the left side of the machine.
2. Connect the wire-harness end labeled P01 to the light on the right side of the machine.
3. Perform the appropriate step for your machine as follows:

   For machines **not equipped** with the Wireless Hour Meter (WHM) Kit:

   - Connect the kit-wire-harness end labeled J02 to the white end of the machine wire harness labeled J4.
   - Connect the kit-wire-harness end labeled J01 to the female connection of the engine wire harness.

   For machines **equipped** with the Wireless Hour Meter (WHM) Kit:

   - Connect the WHM wire-harness end labeled J01 to the white end of the engine wire harness.
   - Connect the WHM wire-harness end labeled J02 to the black end of the light-kit wire harness labeled J02.
   - Connect the WHM wire-harness end labeled J03 to engine mounting bolt as a ground.
   - Connect the WHM wire-harness end labeled J04 to the white end of the main wire harness.
   - Connect the WHM wire-harness end labeled J05 to the green end of the engine wire harness.
   - Connect the white end of the light-kit wire harness (labeled J01) to the green end of the main wire harness.

4

Installing the Switch

Parts needed for this procedure:

1	Switch

Procedure

1. Remove the plug from the handle (Figure 3).
2. Connect the switch with the 8-socket connector of the wire harness (Figure 3).

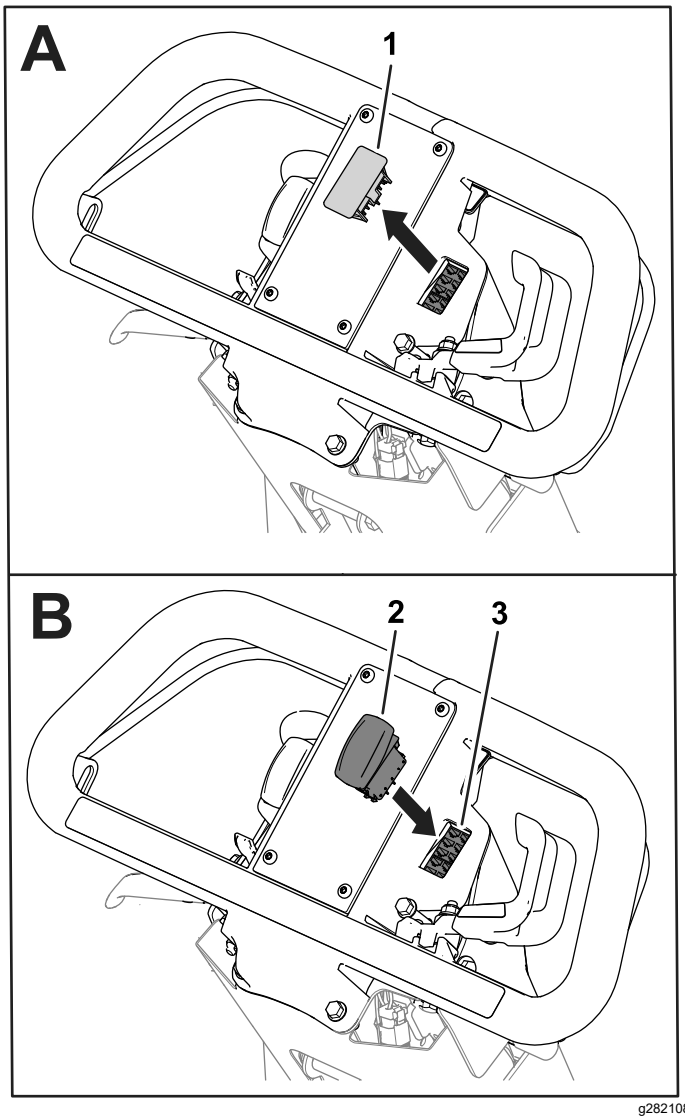

g282108

Figure 3

1. Plug
2. Switch
3. 8-socket connector

Operation

Operating the Lights

- **Turn on the lights:** Press the top of the switch (Figure 4).
- **Turn off the lights:** Press the bottom of the switch (Figure 4).

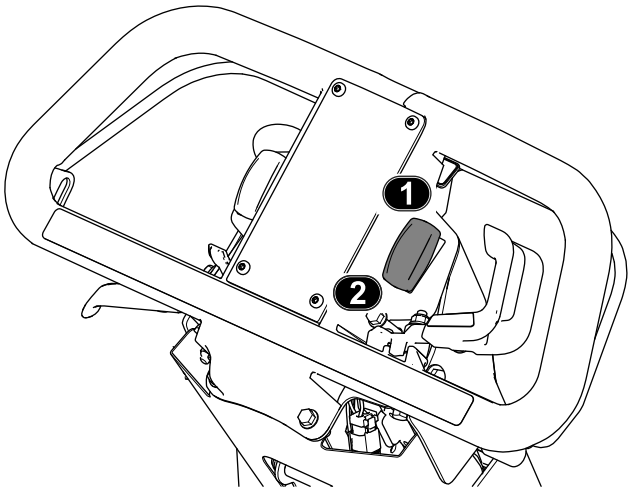

g282109

Figure 4

1. Turn on the lights.
2. Turn off the lights.