Instruction manual

ESPAÑOL: PÁGINA 23
FRANÇAIS: PAGE 45

Model
PH350IS

Generator

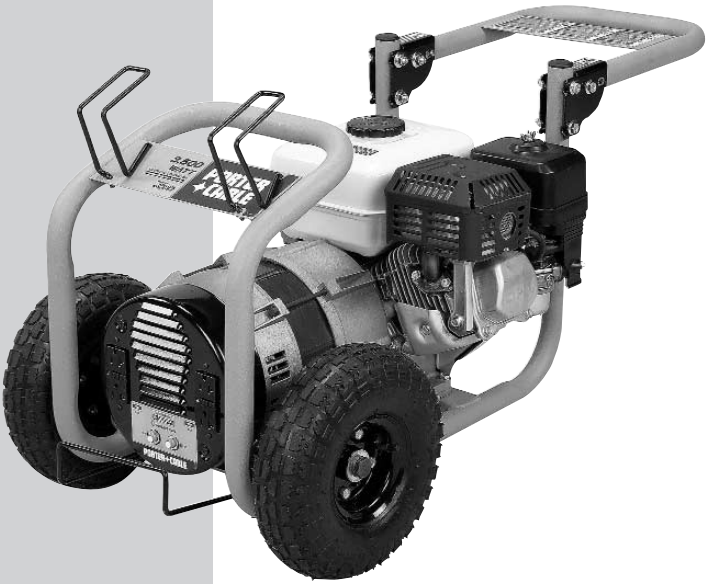

To learn more about Porter-Cable visit our website at:

http://www.porter-cable.com

PORTER✦CABLE

IMPORTANT

Please make certain that the person who is to use this equipment carefully reads and understands these instructions before starting operations.

The Model and Serial No. plate is located on the frame. Record these numbers in the spaces below and retain for future reference.

Model No. _____

Type _____

Serial No. _____

Copyright © 2003 Porter-Cable Corporation

Part No. D27381-033-0

CONSUMER GENERAL AND SERVICE INFORMATION

- Please read and follow these instructions for proper use and maintenance.
- If you experience any problems and need assistance, please call us at our toll free number **1-888-559-8550, Monday through Saturday, 8:00 a.m. To 6:00 p.m. C.S.T.**
- If repair or service part purchase is required, our many Authorized Warranty Service Centers are conveniently located and equipped to handle all in-warranty and out-of-warranty service.
- For the location of the nearest Authorized Warranty Service Center call 1-888-559-8550, Ext. 2, 24 hours a day, 7 days a week.
- Retain sales receipt as proof of purchase for warranty service.
- **Read and understand all safety warnings.**
- Do not operate this unit until you have read and understand this Owners Manual for Safety, Operation, and Maintenance Instructions.
- Do not operate this unit until you have read and understand the Engine Owners Manual for Safety, Operation, and Maintenance Instructions.

Note: Photographs and line drawings used in this manual are for reference only and do not represent a specific model.

CONSUMER SAFETY INFORMATION

⚠WARNING Read Operators Manual. Do not operate equipment until you have read operators Manual for Safety, Assembly, Operation, and Maintenance Instructions.

⚠WARNING This product may not be equipped with a spark arresting muffler. If the product is not equipped and will be used around flammable materials, or on land covered with materials such as agricultural crops, forest, brush, grass, or other similar items, then an approved spark arrester must be installed and is legally required in the state of California. It is a violation of California statutes section 130050 and/or sections 4442 and 4443 of the California Public Resources Code, unless the engine is equipped with a spark arrester, as defined in section 4442, and maintained in effective working order. Spark arrester are also required on some U.S. Forest Service land and may also be legally required under other statutes and ordinances.

⚠WARNING Engine exhaust contains chemicals known, in certain quantities, to cause cancer, birth defects or other reproductive harm.

SAFETY GUIDELINES / DEFINITIONS

This manual contains information that is important for you to know and understand. This information relates to protecting YOUR SAFETY and PREVENTING EQUIPMENT PROBLEMS. To help you recognize this information, we use the symbols below. Please read the manual and pay attention to these sections.

⚠DANGER indicates an imminently hazardous situation which, if not avoided, will result in death or serious injury.

⚠WARNING indicates a potentially hazardous situation which, if not avoided, could result in death or serious injury.

⚠CAUTION indicates a potentially hazardous situation which, if not avoided,may result in minor or moderate injury

CAUTION used without the safety alert symbol indicates potentially hazardous situation which, if not avoided, may result in property damage.

IMPORTANT SAFETY INSTRUCTIONS

⚠WARNING Improper operation or maintenance of this product could result in serious injury and property damage. **Read and understand all warnings and operating instructions before using.**

⚠DANGER **RISK OF ELECTROCUTION AND FIRE**





HAZARD	WHAT CAN HAPPEN	HOW TO PREVENT IT
Attempting to connect generator directly to the electrical system of any building structure.	Back feeding electricity through a building's electrical system to the outside utility feed lines could endanger repair persons attempting to restore service.	Never backfeed electricity through a structure's electrical system.
	Attempting to connect to the incoming utility service could result in electrocution. Restoration of electrical service while the generator is connected to the incoming utility could result in a fire or serious damage if an isolator switch is not installed. Failure to use a double throw transfer switch when connecting to a structure's electrical system can damage appliances and **WILL VOID** the manufacturer's warranty.	To connect to a structure's electrical system in a safe manner, always have a Double-Throw Transfer Switch installed by a qualified electrician and in compliance with local ordinances. **(When installing a Double-Throw Transfer Switch, a minimum of 10 gauge wiring must be used.)**

⚠DANGER **RISK OF ELECTROCUTION AND FIRE (Continued)**



HAZARD	WHAT CAN HAPPEN	HOW TO PREVENT IT
Operation of generator in rain, wet, icy, or flooded conditions.	Water is an excellent conductor of electricity! Water which comes in contact with electrically charged components can transmit electricity to the frame and other surfaces, resulting in electrical shock to anyone contacting them.	Operate generator in a clean, dry, well ventilated area. Make sure hands are dry before touching unit.
Use of worn, damaged, undersized or ungrounded extension cords.	Contact with worn or damaged extension cords could result in electrocution.	Inspect extension cords before use and replace with new cord if required.
	Use of undersize extension cords could result in overheating of the wires or attached items, resulting in fire.	Use proper size (wire gauge) cordset for application see chart in the Assembly section of this manual.
	Use of ungrounded cordsets could prevent operation of circuit breakers and result in electrical shock.	Always use a cordset having a grounding wire with an appropriate grounding plug. DO NOT use an ungrounded plug.
Placing generator on or against highly conductive surface, such as a steel walkway or metal roof.	Accidental leakage of electrical current could charge conductive surfaces in contact with the generator.	Place generator on low conductivity surface such as a concrete slab. ALWAYS operate generator a minimum of six feet from any conductive surface.
Improper connection of items to generator.	Exceeding the load capacity of the generator by attaching too many items, or items with very high load ratings to it could result in overheating of some items or their attachment wiring resulting in fire or electrical shock.	Read the load rating chart and instructions in the Wattage Calculation section. Make sure that the summation of electrical loads for all attachments does not exceed the load rating of the generator.
Operation of unit when damaged, or with guards or panels removed.	Attempting to use the unit when it has been damaged, or when it is not functioning normally could result in fire or electrocution.	Do not operate generator with mechanical or electrical problem. Have unit repaired by an Authorized Service Center.
	Removal of guarding could expose electrically charged components and result in electrocution.	Do not operate generator with protective guarding removed.

⚠DANGER **RISK OF FIRE**



HAZARD	WHAT CAN HAPPEN	HOW TO PREVENT IT
Attempting to fill the fuel tank while the engine is running.	Gasoline and gasoline vapors can become ignited by coming in contact with hot components such as the muffler, engine exhaust gases, or from an electrical spark.	Turn engine off and allow it to cool before adding fuel to the tank. Equip area of operation with a fire extinguisher certified to handle gasoline or fuel fires.
Sparks, fire, hot objects	Cigarettes, sparks, fires, or other hot objects can cause gasoline or gasoline vapors to ignite.	Add fuel to tank in well ventilated area. Make sure there are no sources of ignition near the generator.
Improper storage of fuel	Improperly stored fuel could lead to accidental ignition. Fuel improperly secured could get into the hands of children or other unqualified persons.	Store fuel in a OSHA approved container designed to hold gasoline. Store container in secure location to prevent use by others.
Inadequate ventilation for generator	Materials placed against or near the generator or operating the generator in areas where the temperature exceeds 104° F. ambient (such as storage rooms or garages) can interfere with its proper ventilation features causing overheating and possible ignition of the materials or buildings.	Operate generator in a clean, dry, well ventilated area a minimum of four feet from any building, object or wall. **DO NOT OPERATE UNIT INDOORS OR IN ANY CONFINED AREA.**
Tampering with factory set engine speed settings.	Engine speed has been factory set to provide safe operation. Tampering with the engine speed adjustment could result in overheating of attachments and could cause a fire.	Never attempt to **"speed-up"** the engine to obtain more performance. Both the output voltage and frequency will be thrown out of standard by this practice, endangering attachments and the user.
Overfilling the fuel tank – fuel spillage.	Spilled fuel and its vapors can become ignited from hot surfaces or sparks.	Use care in filling the tank to avoid spilling fuel. Make sure fuel cap is secured tightly and check engine for fuel leaks before starting engine. Move generator away from refueling area or any spillage before starting engine. Allow for fuel expansion. Keep maximum fuel level ¼ inch below the tip of the fuel tank. Never refuel with the engine running.

⚠DANGER **RISK OF INJURY AND PROPERTY DAMAGE WHEN TRANSPORTING GENERATOR**



HAZARD	WHAT CAN HAPPEN	HOW TO PREVENT IT
Fire, Inhalation, Damage to Vehicle Surfaces	Fuel or oil can leak or spill and could result in fire or breathing hazard, serious injury or death can result. Fuel or oil leaks will damage carpet, paint or other surfaces in vehicles or trailers.	If generator is equipped with a fuel shut-off valve, turn the valve to the off position before transporting to avoid fuel leaks. If generator is not equipped with a fuel shut-off valve, drain the fuel from tank before transporting. Transport fuel only in an OSHA approved container. Always place generator on a protective mat when transporting to protect against damage to vehicle from leaks. Remove generator from vehicle immediately upon arrival at your destination.

⚠DANGER **RISK OF BREATHING - INHALATION HAZARD**



HAZARD	WHAT CAN HAPPEN	HOW TO PREVENT IT
Gasoline engines produce toxic carbon monoxide exhaust fumes.	Breathing exhaust fumes will cause serious injury or death.	Operate generator in clean, dry, well ventilated area. Never operate unit in enclosed areas such as garages, basements, storage, sheds, or in any location occupied by humans or animals. Keep children, pets and others away from area of operating unit.

⚠WARNING **RISK OF UNSAFE OPERATION**



HAZARD	WHAT CAN HAPPEN	HOW TO PREVENT IT
Operation of generator in careless manner	All sources of energy include the potential for injury. Unsafe operation or maintenance of your generator could lead to serious injury or death to you or others.	• Review and understand all of the operating instructions and warnings in this manual. • Become familiar with the operation and controls of the generator. Know how to shut it off quickly. • Equip area of operation with a fire extinguisher certified to handle gasoline or fuel fires. • Keep children or others away from the generator at all times.

⚠WARNING **RISK OF UNSAFE OPERATION (Continued)**



HAZARD	WHAT CAN HAPPEN	HOW TO PREVENT IT
Operation of voltage sensitive appliances without a voltage surge protector	Any gasoline operated household generator will incur voltage variations causing damage to voltage sensitive appliances or could result in fire.	Always use a U.L. listed voltage sensitive surge protector to connect voltage sensitive appliances (TV, computer, stereo, etc.). **Failure to use a U.L. listed voltage surge protector will void the warranty on your generator.** **Notice:** A multiple outlet strip is not a surge protector. Make sure you use a U.L. listed voltage surge protector
Raising or suspending generators equipped with lift rings improperly	Generator could fall causing serious injury or death to you or others.	Always use proper connecting procedures as described in this manual when connecting cables, chains, or straps for raising or suspending generators equipped with lift rings.
	Improper raising or suspending can cause damage to the generator.	Always use cables, chains, or straps rated at 2000 lbs working load or more to raise or suspend generator.
Operating generator while suspended	Generator will not operate properly and will cause damage to the generator and could cause serious injury or death to you or others.	Never operate generator while suspended or in an unlevel position. Always operate generate on a flat, level surface.

⚠WARNING **RISK OF HOT SURFACES**



HAZARD	WHAT CAN HAPPEN	HOW TO PREVENT IT
Contact with hot engine and generator components.	Contact with hot surfaces, such as engines exhaust components, could result in serious burns.	During operation, touch only the control surfaces of the generator. Keep children away from the generator at all times. They may not be able to recognize the hazards of this product.

⚠WARNING **RISK OF MOVING PARTS**



HAZARD	WHAT CAN HAPPEN	HOW TO PREVENT IT
Contact with moving parts can result in serious injury.	The generator contains parts which rotate at high speed during operation. These parts are covered by guarding to prevent injury.	Never operate generator with guarding or cover plates removed. Avoid wearing loose fitting clothing or jewelry which could be caught by moving parts.

⚠WARNING **RISK FROM LIFTING**



HAZARD	WHAT CAN HAPPEN	HOW TO PREVENT IT
Lifting a very heavy object.	Serious injury can result from attempting to lift too heavy an object.	The generator is too heavy to be lifted by one person. Obtain assistance from others before you try to move it.

SPECIFICATIONS

MODEL	**PH350IS**
HORSE POWER	6.5
RATED/SURGE WATTS	3500/7500
VOLTAGE	120
AMPERAGE	29.2 A
PHASE	SINGLE
HERTZ	60 Hz
ENGINE SPEED	3600 RPM
MAX. AMBIENT TEMP.	104° F
FUEL CAPACITY	3.8 Quarts
RUN TIME @ 50%/100%	2.3/1.5 HOURS

ASSEMBLY

⚠CAUTION **Read this manual. Do not attempt to operate equipment until you have read this Manual for Safety, Operation, and Maintenance Instructions.**

NOTE: This manual is a general manual. Information in this manual may or may not pertain to your model. Please read carefully.

NOTE: Left and right describes the location of a part with the operator facing the outlet panel.

REMOVE GENERATOR FROM CARTON

- Open carton from top.
- Remove all carton inserts.
- Remove parts and manual kits and save for assembly.
- Cut down all four corners of the box and lay panels flat.
- Remove generator from carton.
- Discard all packaging.

OTHER LOOSE PARTS

1. Oil is supplied, see engine operator's manual for correct procedure to add oil and fuel to engine.

IMPORTANT: Before any attempt to start your generator be sure to check engine oil (See Engine Operator's manual)

2. Parts kit containing: protective bar (1 used), extension cord wraps (2 used), rubber bumper (1 used), screw, 5/16-18 x 1-1/4" (2 used), screw, 1/4-20 x 3/4" (1 used), 1/4-20 keps nut with washer (1 used), 5/16-18 flange nut (2 used), self threaded flange nut (4 used).

EXTENSION CORD WRAP FORMS AND PROTECTIVE BAR

1. The ends of the extension cord wrap forms are not pre-threaded. To make assembly easier use a 7/16" socket and ratchet to thread the self-threading nuts onto the ends of the extension cord wrap forms about ¼". Remove self-threading nuts and proceed to step 2.
2. Attach each extension cord wrap form (1) to panel assembly with self threading flange nuts (2), as shown. Tighten securely.
3. Attach protective bar (3) to frame with 5/16-18 x 1-1/4" screws (5) and 5/16-18 flange nuts (4). Tighten securely.

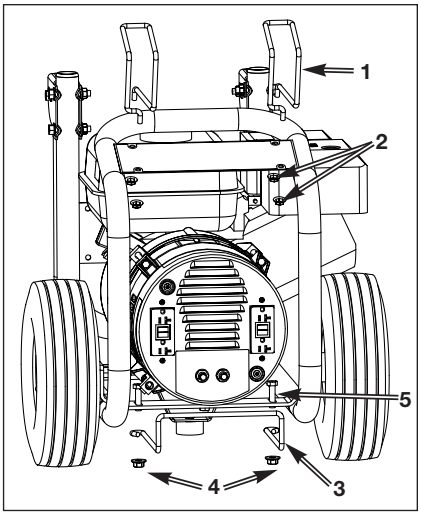

RUBBER BUMPER

1. Attach the rubber bumper (6) to the foot bracket with 1/4-20 x 3/4" screw (7) and 1/4-20 keps nut with washer (8).

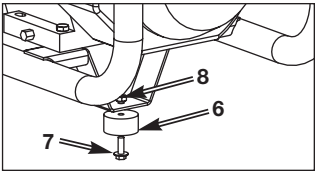

HANDLE

NOTE: Lubricate area where handles rotates in brackets with light oil.

⚠WARNING **Risk of moving parts. Keep fingers away from all moving parts. Contact with moving parts can result in serious injury. Keep children away from the generator at all times. They may not be able to recognize the hazards of this product.**



1. Raise handle and allow snap buttons to snap into place.

GROUNDING THE GENERATOR

A grounding lug is supplied with the generator for use when required by local electrical ordinances. Refer to article 250 of the National Electrical Code to clarify any needed grounding information. Your local electric company or a certified electrician should be able to help you with this information.

NOTE: Your engine is already grounded to the frame by a grounding strap.

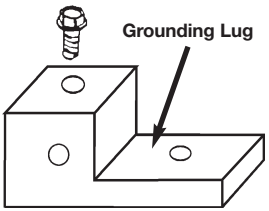

OBTAINING ELECTRICITY FROM THE GENERATOR

There are basically 2 ways to obtain electricity from a generator:

1. Use of extension cords directly from the generator to the appliance, lights, tools, etc.
2. Use of a double-throw transfer switch installed directly to the main electrical supply outside of house.

EXTENSION CORDS

When using an appliance or tool at a considerable distance from the generator, a 3-wire extension cord that has a 3-blade grounding plug and a 3-slot receptacle that accepts the tool's plug **MUST** be used in order to reduce the risk of electrical shock. A cord of adequate size must be used. Using the following chart to determine the minimum wire size required.

Extension Cord Wire Gauge Chart		
Cord Length	**Wire Gauge Size**	**Amperage**
0 to 100 ft.	12 ga.	*Up to 20 amp draw
0 to 100 ft.	10 ga.	Up to 30 amp draw

***NOTE:** When amperage exceeds 20 amp; a 12 gauge extension cord should not be used for long distances.

⚠CAUTION **An extension cord that is hot to the touch is overloaded. Repair or replace damaged extension cords immediately.**

DOUBLE THROW TRANSFER SWITCH

⚠WARNING Potential hazards exist when a portable electric generator is connected to the main electrical supply coming into the house. It is at that point that the electrical generator could feed back into the utility company's system causing possible electrocution of workers who are repairing the electrical lines.

To avoid back feeding of electricity into utility systems, a double-throw transfer switch must be installed between the generator and utility power. The Double-Throw Transfer Switch should be installed by a licensed electrician and in compliance with all state and local electrical codes. **(When installing a Double-Throw Transfer Switch, a minimum of 10 gauge wiring must be used.)**

The electrician should also install a sub-panel to isolate the circuits you would want to use during an emergency or electrical power outage. Your generator will not be large enough to handle the load of all the lights, appliances, TV, etc. at one time. To select which items to run during the electrical power outage, see **Wattage Calculation** section in this manual.

OPERATION

KNOW YOUR GENERATOR

Read this General Manual and Safety Rules before operation of your Generator. Compare the illustration in your parts manual with your generator to familiarize yourself with the location of various controls and adjustments. Save all manuals for future references.

GENERATOR CAPACITY

IMPORTANT: Exceeding the rated capacity of your generator can result in serious damage to your generator and connected electrical devices. See the **Wattage Calculation** section in this manual to assist you in determining the appliances and tools that can be run with the wattage capacity of your generator.

CIRCUIT BREAKERS

Each receptacle has a circuit breaker to protect the generator from overloading. If the circuit breaker trips, unplug all electrical loads from the generator. Let the circuit breaker cool down. Push circuit breaker button to reset.

LOW OIL PROTECTION

Your generator engine is equipped with Low Oil Shutdown. Low Oil Shutdown is a safety device designed to protect your engine from damage in the event the oil level in the crankcase is low.

If while the engine is running, the oil gets low, it will automatically shut itself down and will not restart until the oil is added. If the oil is low before start-up, the generator will not start until oil is added.

NOTE: The Low Oil Shutdown mechanism is very sensitive. You must fill the engine to the full mark on the dipstick to inactivate this safety device.

BEFORE START UP

⚠CAUTION **This generator has been shipped from the factory without oil in the crankcase. Operating the unit without oil can damage the engine.**

⚠CAUTION **Always check engine oil level before every start. Running engine low of oil or out of oil could result in serious damage to the engine.**

Follow the steps listed below before starting generator:

1. Check engine oil. Refer to the Engine Operator's Manual for correct grade and quantity of oil.
2. Check fuel level, fill as required. Make sure generator is turned off and has been allowed time to cool down. Use clean, fresh, regular unleaded gasoline with a minimum of 87 octane. Do not mix oil with gasoline.

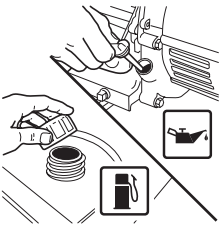

⚠CAUTION **Never fill fuel tank completely. Fill tank to 1/2" below the bottom of the filler neck to provide space for fuel expansion. Wipe any fuel spillage from engine and equipment before starting engine.**

⚠WARNING **Never fill fuel tank indoors. Never fill fuel tank when engine is running or hot. Do not smoke when filling fuel tank.**

⚠CAUTION **Never run engine indoors or in enclosed, poor ventilated areas, engine exhaust contains carbon monoxide, an odorless and deadly gas.**

3. Make sure generator is grounded in accordance with local requirements.
4. All electrical loads **MUST** be disconnected.

⚠CAUTION **Engine speed has been factory set to provide safe operation. Tampering with the engine speed adjustment could result in overheating of attachments and could cause a fire. Never attempt to "speed-up" the engine to obtain more performance. Both the output voltage and frequency will be thrown out of standard by this practice, endangering attachments and the user.**

⚠CAUTION **You MUST unplug any load from the generator before starting to prevent permanent damage to any appliances.**

TO START THE ENGINE

⚠CAUTION **Never run engine indoors or in enclosed, poor ventilated areas, engine exhaust contains carbon monoxide, an odorless and deadly gas.**

1. Open the fuel shut-off valve on engine.



2. Move the choke control located on the engine to "CHOKE" position.

NOTE: No choke is required on warm engines. Make sure choke is in the "RUN" position on warm engine starts.



4. Move the ON/OFF switch on engine to the ON position.

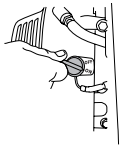

5. Grasp handle on rope starter and pull slowly until resistance is felt. Let the rope rewind slowly. Pull rope with a rapid full arm stroke. Let rope rewind slowly. Repeat if necessary.



NOTE: IF ENGINE OIL LEVEL IS TOO LOW, ENGINE WILL NOT START. CHECK OIL LEVEL AND ADD IF NECESSARY.

6. When engine starts, gradually move the choke to the "RUN" position.



IMPORTANT: Allow generator to run at no load for 5 minutes upon each initial start-up to allow engine and generator to stabilize.

STOPPING ENGINE

1. Disconnect all electrical loads.
2. Turn ON/OFF switch to "OFF" position.

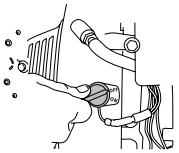

3. Close fuel shut-off valve.



CONNECTING ELECTRICAL LOADS

1. Let engine run and warm up for five minutes after starting with no electrical load.

Connect loads in the following manner to prevent damage to equipment:

2. Connect inductive load equipment first, inductive loads consist of refrigerators, freezers, water pumps, air conditioners, or small hand tools. Connect the items that require the most wattage first. See **Wattage Calculation** Section in this manual.
3. Connect the lights next.
4. Voltage sensitive equipment should be the last equipment connected to the generator. Plug voltage sensitive appliances such at TV's, VCR's, microwaves, ovens, computers, and cordless telephones into a UL listed voltage surge protector, then connect the UL listed voltage surge protector to the generator.

⚠CAUTION **Failure to connect and operate equipment in this sequence can cause damage to equipment and will void the warranty on your generator.**

Follow the wattage calculation table in the Wattage Calculation section of this manual. Overloading the generator will cause power fluctuations and can damage equipment and appliances.

Porter-Cable Corporation will only be responsible for damage to customer's equipment when the generator is determined to be defective. This determination will only be made by an authorized representative of Porter-Cable Corporation and this decision will be final. Porter-Cable Corporation reserves the right to inspect the electrical connections at the customer's site of operation and test the generator for proper operation before any determination of liability is made. Failure to maintain the equipment or wiring for inspection will void any claim for damages by the customer. Porter-Cable Corporation will not be responsible for equipment damaged as a result of voltage surges, improper operation or improper installation of the generator.

MAINTENANCE

CUSTOMER RESPONSIBILITIES TABLE

MAINTENANCE TASK	Before each use	Every 25 Hours of Every Season	Every 50 Hours of Every Season	Every 100 Hours of Every Season
Check oil level	X	See Note 2		
Change oil			See Note 1	
Clean Air Filter Assembly		X		
Check Spark Plug		X		X
Prepare Unit for Storage	Prepare unit for storage if it is to remain idle for more than 30 days.			

Note 1: Change oil after first two (2) operating hours and every 50 operating hours thereafter, more often if operated in extreme dusty or dirty conditions.

Note 2: Check oil after 5 hours of operation.

GENERAL RECOMMENDATIONS

The warranty of the generator does not cover items that have been subjected to operator abuse or negligence. To receive full value from the warranty, operator must maintain the generator as instructed in this manual.

ENGINE MAINTENANCE

Refer to the Engine Operator's manual for service and maintenance of the engine.

GENERATOR MAINTENANCE

Your generator should be kept clean and dry at all times. The generator should not be stored or operated in environments that includes excessive moisture, dust or any corrosive vapors. If these substances are on the generator, clean with a cloth or soft bristle brush. Do not use a garden hose or anything with water pressure to clean the generator. Water may enter the cooling air slots and could possibly damage the rotor, stator and the internal windings of the gen head.

STORAGE

If you are going to store your generator for more than 30 days, use the following information as a guide to prepare the generator for storage.

⚠CAUTION **Never store generator with fuel in the tank indoors or in enclosed, poorly ventilated areas, where fumes can reach an open flame, spark or pilot light as on a furnace, water heater, clothes dryer or other gas appliances.**

ENGINE PREPARATION

1. Add fuel stabilizer to fuel tank to minimize the formation of fuel gum deposits during storage.
2. Run engine at least 10 minutes after adding stabilizer to allow it to enter the fuel system.
3. Next shut off engine.
4. Disconnect the spark plug wire and remove the spark plug.
5. Add one teaspoon of oil through the spark plug hole.
6. Place rag over spark plug hole and pull the recoil a few times to lubricate the combustion chamber.
7. Replace the spark plug, but do not connect the spark plug wire.

NOTE: If a fuel stabilizer is not used, all gasoline must be drained from the tank and carburetor to prevent gum deposits from forming on these parts and causing possible malfunction of the engine.

GENERATOR

- Clean the generator as outlined in the **Maintenance** Section on this manual.
- Check that cooling air slots and openings on generator are open and unobstructed.

WATTAGE CALCULATIONS

IMPORTANT

Never exceed the rated capacity of your generator. Serious damage to the generator or appliance could result from an overload.

1. Starting and running wattage requirements should always be calculated when matching a generators wattage capacity to the appliance or tool.
2. There are two types of electrical appliances that can be powered by your generator:
   - A. Items such as radios, light bulbs, television sets, and microwaves have a "resistive load". Starting wattage and running wattage are the same.
   - B. Items such as refrigerators, air compressors, washer, dryer, and hand tools that use an electrical motor have an "inductive load". Inductive load appliances and tools require approximately 2 to 4 times the listed wattage for **starting** the equipment. This initial load only lasts for a few seconds on start-up but is very important when figuring your total wattage to be used.
   - C. Always start your largest electric motor first, and then plug in other items, one at a time.

NOTE: On 120-volt loads the maximum starting wattage should **NOT** exceed one half of the rated generator wattage. Example: a 5000 rated wattage generator = 2500 maximum starting wattage.

DETERMINING WATTAGE REQUIREMENTS

Before operating this generator list all of the appliances and/or tools that are going to operate at the same time. (Then determine the starting wattage requirements and the running wattage requirements by following example and/or refer to household wattage calculator.)

1. First total the running wattage of all appliances and/or tools that will be operated at the same time.

		Running Watts	Starting Watts
Example 1:			
Lights	=	100 Watts	0
Television	=	300 Watts	0
Slow Cooker	=	250 Watts	0
	TOTAL	=650 Watts	0

2. Next the starting wattages of any appliances and/or tools that will start and stop during operation.

	Running Watts	Starting Watts
Example 2:		
Small Refrigerator	500 Watts	2000 Watts
TOTAL	=500 Watts	2000 Watts

3. The running wattage of examples 1 & 2 totals 1150 watts. The starting wattage of the small refrigerator is 2000 watts which is 1500 watts more than the running watts. Take this difference of 1500 starting watts from the refrigerator and add to the total running watts of 1150.

Example 3: 1500 Starting Watts
1150 Running Watts
TOTAL =2650 Total Watts

Generator must have a maximum capacity of at least 2650 watts.

STARTING WATTAGE REQUIREMENTS

1. Some appliances and tools will list on the motor nameplate the starting and running voltage and amperage requirements. Use the following formula to convert voltage and amperage to wattage:

   Volts X Amp = Watts

   Example: **120 volts x 10 amps = 1200 watts**

2. To determine the approximate starting wattage requirement for most appliances and tools with inductive type motors, multiply the wattage that was calculated by 2 to 4 times to assure adequate generator capacity. If the nameplate information is not available use the values on the following chart as a guide.
3. Remember that the starting and running wattage for resistive loads are the same. (**Example:** a 100 watt light bulb requires only 100 watts to start.) Most resistive loads **will** be listed in wattage.

Application Guide

To select the right generator for your needs, total the wattage of the items to be run at the same time.

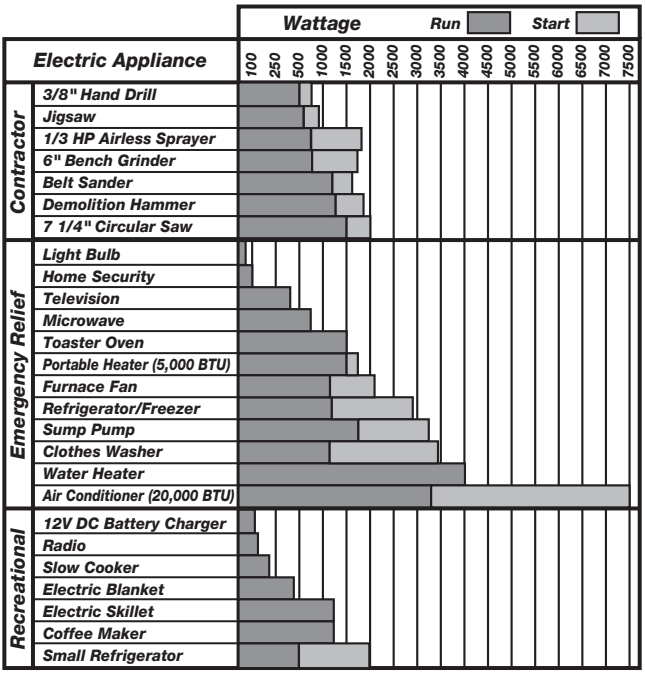

The wattage ratings shown are averages. Wattage requirements may vary with different brands of appliances.

HOUSEHOLD WATTAGE CALCULATOR

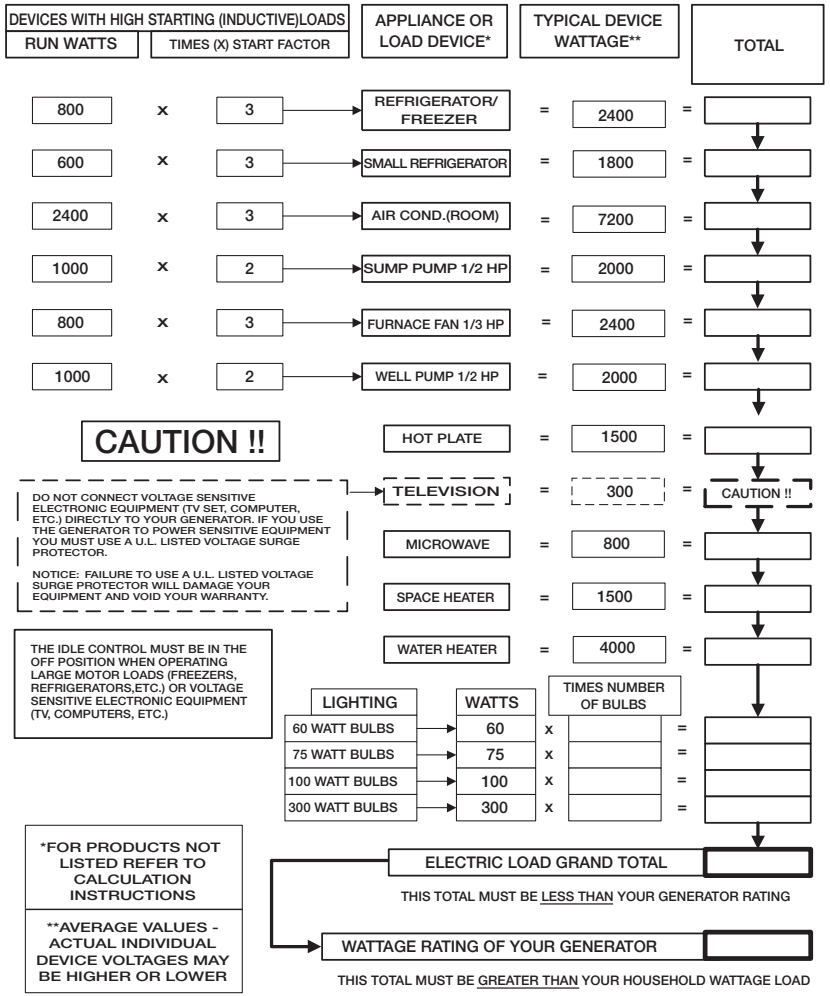

TROUBLESHOOTING GUIDE

PROBLEM	CAUSE	CORRECTION
Engine will not start	1. Low on fuel or oil. 2. Ignition switch in "Off" position. 3. Faulty spark plug. 4. Choke in wrong position. 5. Fuel shut-off valve in closed position 6. Unit loaded during start-up. 7. Spark plug wire loose.	1. Add fuel or oil. 2. Turn to "ON" position 3. Replace spark plug. 4. Adjust choke accordingly. 5. Open fuel shut-off valve. 6. Remove load from unit. 7. Attach wire to spark plug.
No electrical output	1. Faulty receptacle. 2. Circuit breaker kicked out. 3. Defective capacitor. 4. Faulty power cord. 5. GFCI switch breaker kicked out	1. Have Service Center replace. 2. Depress and reset. 3. Have Service Center replace capacitor. 4. Repair or replace cord. 5. Depress and reset
Repeated circuit breaker tripping	1. Overload 2. Faulty cords or equipment	1. Reduce load. 2. Check for damaged, bare, or frayed wires on equipment. Replace.
Generator overheating	1. Generator overloaded. 2. Insufficient ventilation.	1. Reduce load. 2. Move to adequate supply of fresh air.
Handle does not fold with ease.	1. Area where handle rotates in brackets not lubricated.	1. Lubricate area with light oil. 2. Loosen bolt going thru handle on both sides.

LIMITED WARRANTY

PORTER-CABLE CORPORATION warrants to the original purchaser that all products covered under this warranty are free from defects in material and workmanship. Products covered under this warranty include air compressors, air tools, service parts, pressure washers, and generators, which have the following warranty periods:

3 YEARS - Limited warranty on 2-stage oil-free air compressor pumps that operate at 1725 RPM.

2 YEARS - Limited warranty on oil-lubricated air compressor pumps.

1 YEAR - Limited warranty on all other air compressor components.

2 YEARS - Limited warranty on electric generator alternators.

1 YEAR - Limited warranty on other generator components.

2 YEARS - Limited warranty on pneumatic air tools as described in Porter-Cable general catalog.

1 YEAR - Limited warranty on pressure washers used in consumer applications (i.e. personal residential household usage only).

90 DAY - Pressure washers used for commercial applications (income producing) and service parts.

1 YEAR - Limited warranty on all accessories.

Porter-Cable will repair or replace, at **Porter-Cable**'s option, products or components which have failed within the warranty period. Service will be scheduled according to the normal work flow and business hours at the service center location, and the availability of replacement parts. All decisions of **Porter-Cable** Corporation with regard to this limited warranty shall be final.

This warranty gives you specific legal rights, and you may also have other rights which vary from state to state.

RESPONSIBILITY OF ORIGINAL PURCHASER (initial User):

- To process a warranty claim on this product, DO NOT return it to the retailer. The product must be evaluated by an **Porter-Cable** Authorized Warranty Service Center. For the location of the nearest **Porter-Cable** Authorized Warranty Service Center call 1-888-559-8550, 24 hours a day, 7 days a week.
- Retain original cash register sales receipt as proof of purchase for warranty work.
- Use reasonable care in the operation and maintenance of the product as described in the Owners Manual(s).
- Deliver or ship the product to the nearest **Porter-Cable** Authorized Warranty Service Center. Freight costs, if any, must be paid by the purchaser.
- Air compressors with 60 and 80 gallon tanks will be inspected at the site of installation. Contact the nearest **Porter-Cable** Authorized Warranty Service Center that provides on-site service calls, for service call arrangements.
- If the purchaser does not receive satisfactory results from the **Porter-Cable** Authorized Warranty Service Center, the purchaser should contact Porter-Cable.

THIS WARRANTY DOES NOT COVER:

- Merchandise sold as reconditioned, used as rental equipment, and floor or display models.
- Merchandise that has become damaged or inoperative because of ordinary wear, misuse*, cold, heat, rain, excessive humidity, freeze damage, use of improper chemicals, negligence, accident, failure to operate the product in accordance with the instructions provided in the Owners Manual(s) supplied with the product, improper maintenance, the use of accessories or attachments not recommended by **Porter-Cable**, or unauthorized repair or alterations.
  * An air compressor that pumps air more than 50% during a one hour period is considered misuse because the air compressor is undersized for the required air demand.
- Repair and transportation costs of merchandise determined not to be defective.
- Costs associated with assembly, required oil, adjustments or other installation and start-up costs.
- Expendable parts or accessories supplied with the product which are expected to become inoperative or unuseable after a reasonable period of use, including but not limited to sanding disks or pads, saw and shear blades, grinding stones, springs, chisels, nozzles, o-rings, air jets, washers and similar accessories.
- Merchandise sold by **Porter-Cable** which has been manufactured by and identified as the product of another company, such as gasoline engines. The product manufacturer's warranty, if any, will apply.
- **ANY INCIDENTAL, INDIRECT OR CONSEQUENTIAL LOSS, DAMAGE, OR EXPENSE THAT MAY RESULT FROM ANY DEFECT, FAILURE OR MALFUNCTION OF THE PRODUCT IS NOT COVERED BY THIS WARRANTY**. Some states do not allow the exclusion or limitation of incidental or consequential damages, so the above limitation or exclusion may not apply to you.
- **IMPLIED WARRANTIES, INCLUDING THOSE OF MERCHANTABILITY OR FITNESS FOR A PARTICULAR PURPOSE, ARE LIMITED TO ONE YEAR FROM THE DATE OF ORIGINAL PURCHASE.** Some states do not allow limitations on how long an implied warranty lasts, so the above limitations may not apply to you.

PORTER✦CABLE

Porter-Cable Corporation
Jackson, TN USA
1-888-559-8550

QUICK FACTS

CALL 1-888-559-8550 TO FIND A LOCAL AUTHORIZED SERVICE CENTER NEAR YOU FOR REPAIRS AND SERVICE PART PURCHASES

ENGINE GAS	Use clean, fresh gasoline with a minimum 87 octane rating. Do not add gasoline during or immediately after use.
ENGINE OIL	Refer to engine owner's manual for oil recommendations. Most generators are equipped with a low-oil shutdown. If the oil is low or if the Generator is not level, the engine will not start.
WATTAGE	Make wattage calculations before use. Refer to general operator's manual for further instructions.
WIRING	Contact an electrician for any wiring instructions. If wiring into a house, a double-throw transfer switch and a heavy duty cord set must be used.
BATTERY VOLT REG.	Use a standard (12V) lawn and garden battery with a minimum of 45 A.H. or 210 CCA. The voltage and frequency are regulated by the rpm's of the engine. Do not adjust the throttle or governor to achieve higher performance. This will only alter the factory Pre-set settings and damage anything connected to the generator. Be sure a volt/amp surge protector is used when sensitive electronic equipment is used, such as: televisions, computers, stereos, and etc… The damage of such equipment without the use of a protector WILL NOT be covered under warranty.
ENGINE	Do not adjust or attempt maintenance without consulting engine manual or an authorized engine service center.
STORAGE	Add stabilizer to fuel tank and run engine for 5 minutes before storage. When in long term storage, operate the generator every 60 days for at least 10 minutes with a load on it. This will prevent the loss of residual magnetism that produces the electricity.
OPERATION	Allow the generator to run 5 minutes at no load for the engine and the gen head to stabilize. Make sure the adequate size of extension cord is used. Refer to the Grounding Instructions/Extension Cord section of the owners manual. If the generator is operating equipment that is drawing half of the rated watts it is considered 50% load. Using all of the rated watts is considered 100% load.

ALWAYS REFER TO THE MANUALS SUPPLIED WITH THIS UNIT