AC INFINITY

AIRPLATE SERIES

CABINET COOLING SYSTEM

USER MANUAL

WELCOME

Thank you for choosing AC Infinity. We are committed to product quality and friendly customer service. If you have any questions or suggestions, please don't hesitate to contact us. Visit www.acinfinity.com and click contact for our contact information.

EMAIL
support@acinfinity.com

WEB
www.acinfinity.com

LOCATION
Los Angeles, CA

MANUAL CODE AP2007X1

PRODUCT	MODEL	UPC-A
AIRPLATE S1	AI-CFS80BA	854759004044
AIRPLATE S2	AI-APS2	854759004723
AIRPLATE S3	AI-CFS120BA	854759004006
AIRPLATE S5	AI-CFD80BA	854759004105
AIRPLATE S7	AI-CFD120BA	854759004068
AIRPLATE S9	AI-APS9	854759004549
AIRPLATE T3	AI-APT3	854759004372
AIRPLATE T7	AI-APT7	854759004389
AIRPLATE T8	AI-APT8	854759004945
AIRPLATE T8 WHITE	AI-APT8-W	819137020504
AIRPLATE T9	AI-APT9	854759004396
CONTROLLER 2	AI-ATC	854759004402
CONTROLLER 8	AI-TCD4	854759004730

MANUAL INDEX

Company Contact ..... Page 3
Manual Index ..... Page 5
Cabinet Cooling Guide ..... Page 6
Key Features ..... Page 7
Product Contents ..... Page 8
Changing Airflow Direction ..... Page 9
Mounting ..... Page 11
Powering ..... Page 14
Connecting More Fans ..... Page 15
S-Series Controller ..... Page 16
T-Series Controller Programming ..... Page 17
Multizone Controller Programming ..... Page 23
FAQ ..... Page 24
Other AC Infinity Products ..... Page 25
Warranty ..... Page 26

CABINET COOLING GUIDE

INTAKE AND EXHAUST

All cabinet fan systems should contain an intake and an exhaust variable, which can either be fans or ventilation holes. This is required to balance the static pressures between the inside and outside of the cabinet.

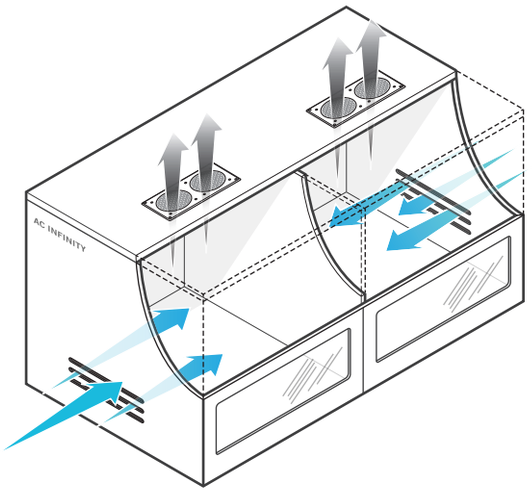

FAN POSITIONING

Due to natural convection, warmer air which is less dense than colder air will rise on its own. It is ideal to position fans near the top of the cabinet configured to exhaust out the warmer air and position fans near the bottom to push in colder air.

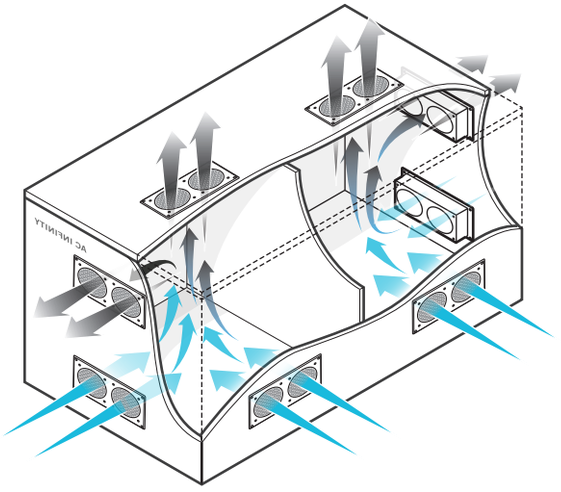

CFM REQUIREMENTS

A fan or set of fan's CFM rating measures the rate at which air flows into a space. To obtain the required CFM rating, divide the dimensions of a cabinet by 1728 to get the cubic feet area then multiply by three to account for various real world variables.

$$\frac{\text{SIZE OF CABINET}\ \text{L x W x H (inches)}}{1728} \times 3$$

KEY FEATURES

ALUMINIUM FRAME
Features an aluminium frame with a brushed black finish and CNC machined corners.

PROTECTIVE BACK
Fans are enclosed in a hard shell cover to prevent intrusions.

SMART CONTROLLER
(Sold separately or included if the T-SERIES was purchased)

LCD display enables temp monitoring, thermal control, speed control, alarms, and SMART energy mode.

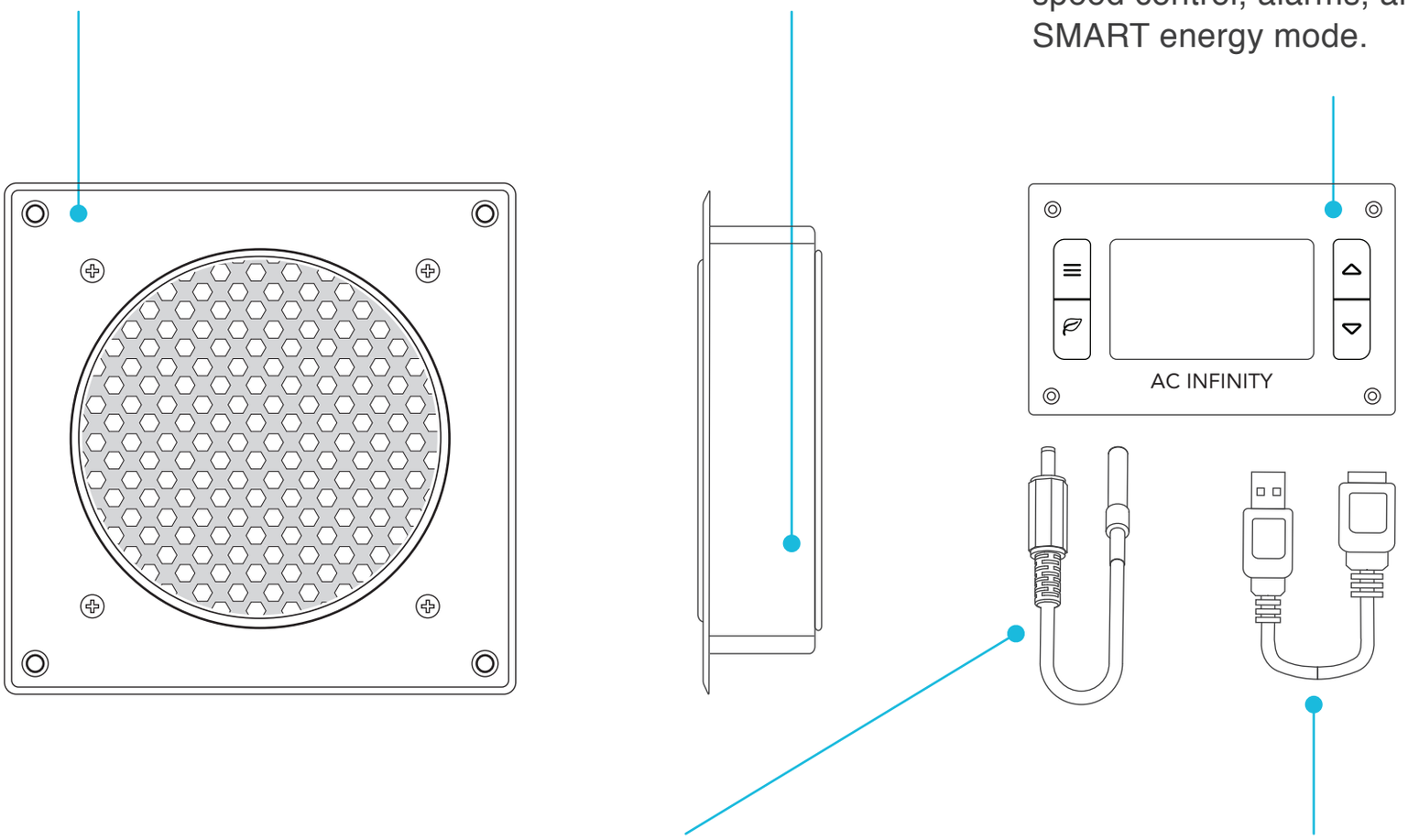

DUAL BALL BEARINGS
Fans contain long-life ball bearings rated at 67,000 hours. This feature also enables fans to be mounted in any direction.

THERMAL PROBE
The corded sensor probe constructed of stainless steel ensures an accurate temperature reading.

FAN EXPANSION PORTS
Each fan unit contains an USB port to daisy chain additional fan units. Up to six fans can share the same power source.

PRODUCT CONTENTS

S-SERIES

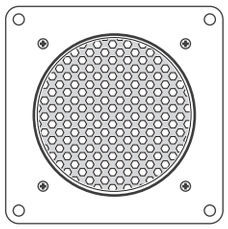

CABINET FAN UNIT (x1)

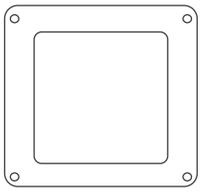

PLASTIC STENCIL (x1)

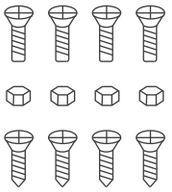

MOUNTING SCREW SET (x4)

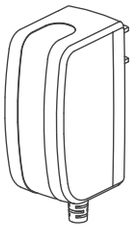

USB POWER ADAPTER (x1)

T-SERIES (Includes S-SERIES Fan Units)

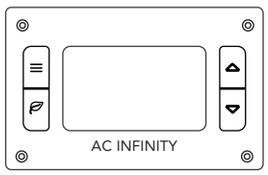

THERMAL CONTROLLER (x1)

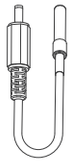

THERMAL PROBE (x1)

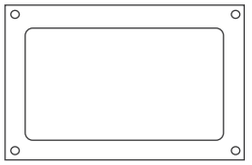

PLASTIC STENCIL (x1)

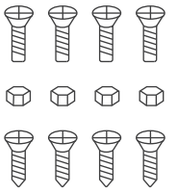

MOUNTING SCREW SET (x4)

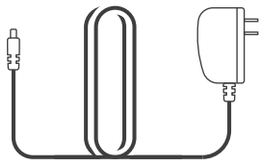

USB POWER ADAPTER (x1)

MULTIZONE CONTROLLER (Sold Seperately)

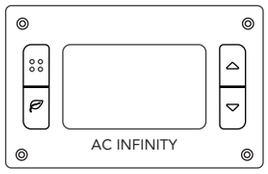

THERMAL CONTROLLER (x1)

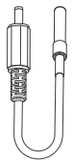

THERMAL PROBE (x4)

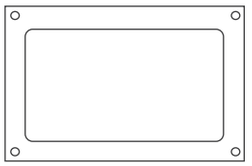

PLASTIC STENCIL (x1)

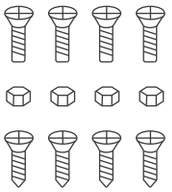

MOUNTING SCREW SET (x4)

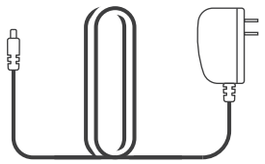

USB POWER ADAPTER (x1)

CHANGING FAN DIRECTION

STEP 1

The fans are currently drawing the air out of the metal plate. To have the fans blow air into the cabinet, use philips screw driver to remove all the screws from the front and backside of the unit. Once completed, you should have an aluminum fan and plastic cover. Each fan will have eight screws, one grill, and one fan guard per fan.

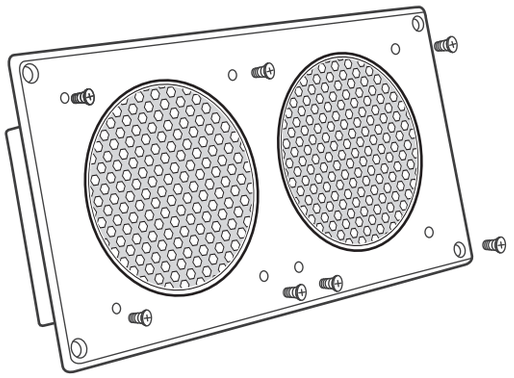

STEP 2

Identify the direction of the fans airflow, which is towards the black label at the center of the fan.
Then position the path of the fan's power cord so that it will run towards the black label. Be prepared to slip the cord through the plastic cover's cord gap.

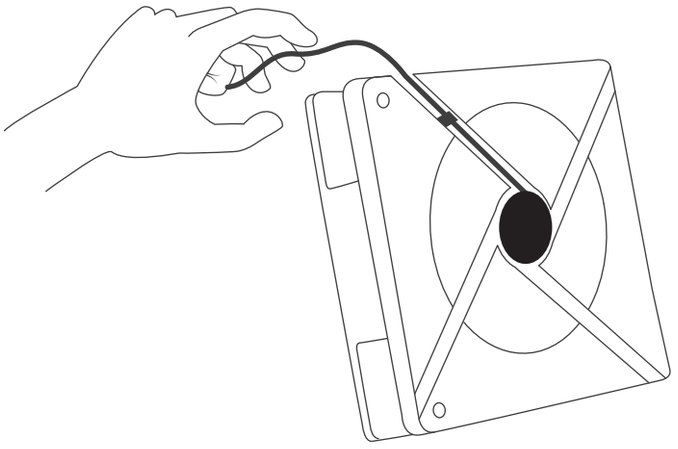

CHANGING FAN DIRECTION

STEP 3

Position the fan guard on the side of the fan that has the black label. Screw the plastic cover onto the fans with the fan guard in between. Please make sure the fan's power cord slips through the cord gap on the plastic cover.

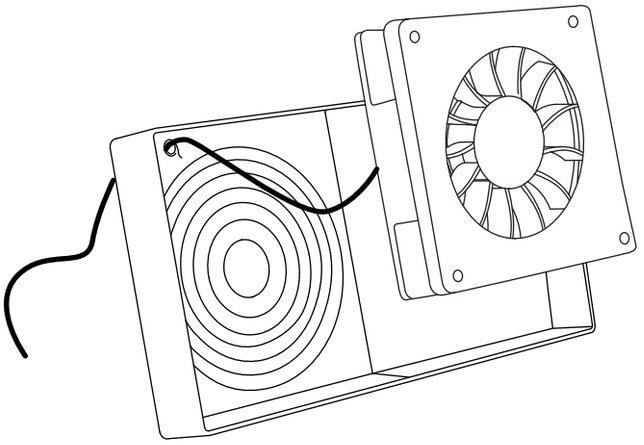

STEP 4

Lastly, position the grill on the opposite side which does not contain a black label, for each fan. Then use a Phillips screw driver to secure the aluminum frame back onto the fans with the grill in between.

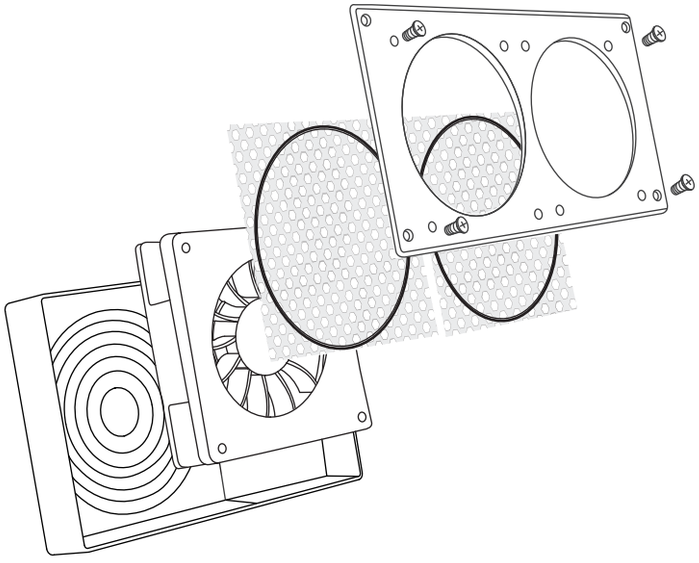

MOUNTING

STEP 1

Determine where you wish to mount the fan and controller unit (if purchased) on your cabinet or wall. Position the stencils and apply tape to the outer edges.

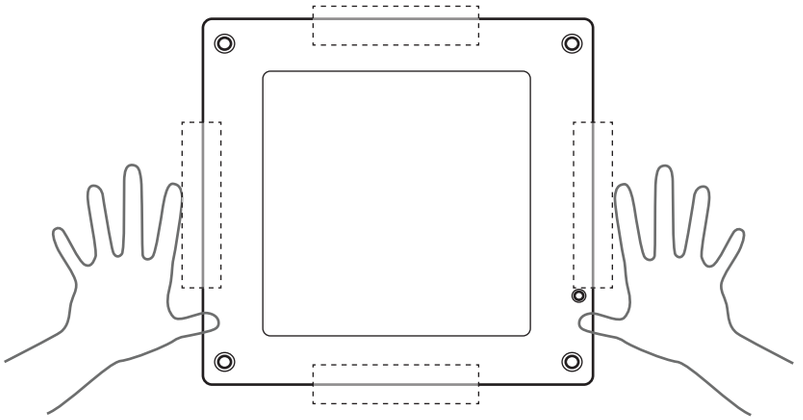

STEP 2

Use a pencil to outline the center square and four outer screw holes on the fan and thermo controller's stencils (if purchased). Check for accuracy before proceeding to the next step.

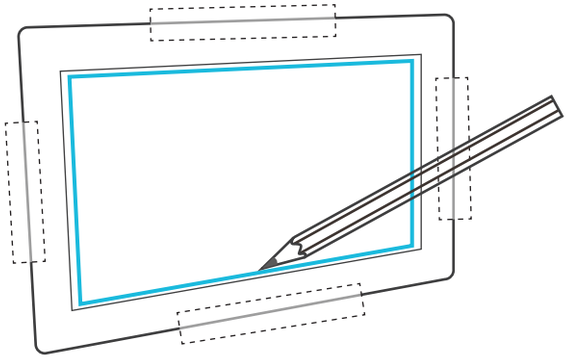

MOUNTING

STEP 3

Remove the plastic stencil and tape. If you prefer machine screws instead of wood screws to mount the fan and controller, use a power drill to create four screw holes. The Recommended drill bit size is 10/64” to 14/64”.

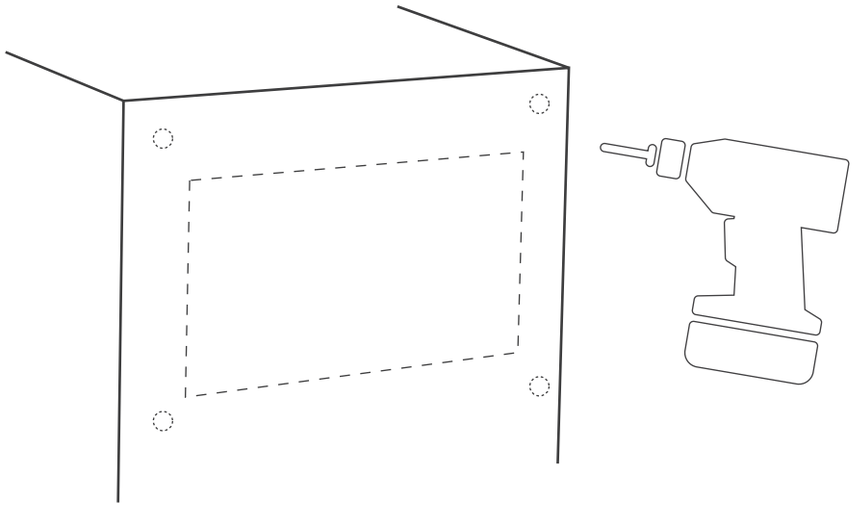

STEP 4

Using a saw, cut out the center piece as outlined by your markings from step one. You may need to first drill a hole at each of the corners to fit your saw through. A power jigsaw may be preferred for thicker wood.

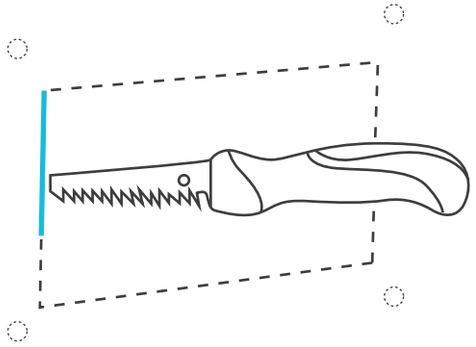

MOUNTING

STEP 5

Place the fan unit into the newly cut square so that each screw hole is properly aligned. Please make sure the cut center hole is large enough that the plastic backside of the fan does not come into contact with the cabinet. This is to minimize vibrations which cause noise.

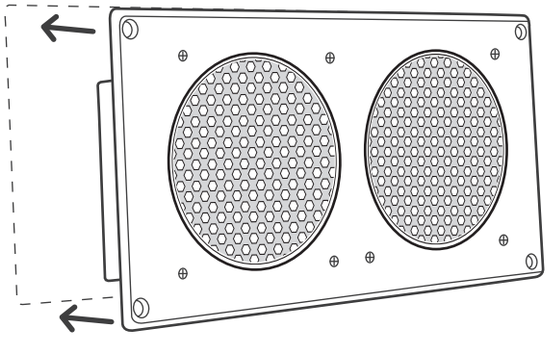

STEP 6

Using the four machine screws, secure the fan unit's frame onto the cabinet or wall. Push each screw through their corresponding hole located on the frame and wall. The included wood screws can also be used instead.Tighten the nuts on the other side.

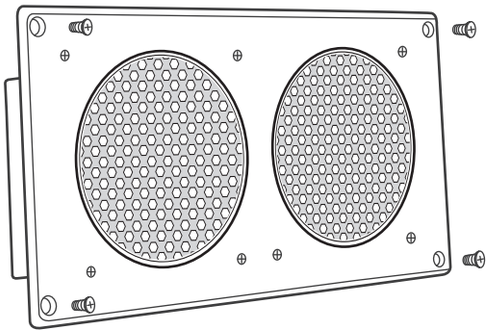

POWERING

S-SERIES

You can power the fan unit by plugging the unit's USB male connector into a standard USB port, or plugging the USB male connector into the included power adapter through an outlet. Then plugging the adapter into an outlet.

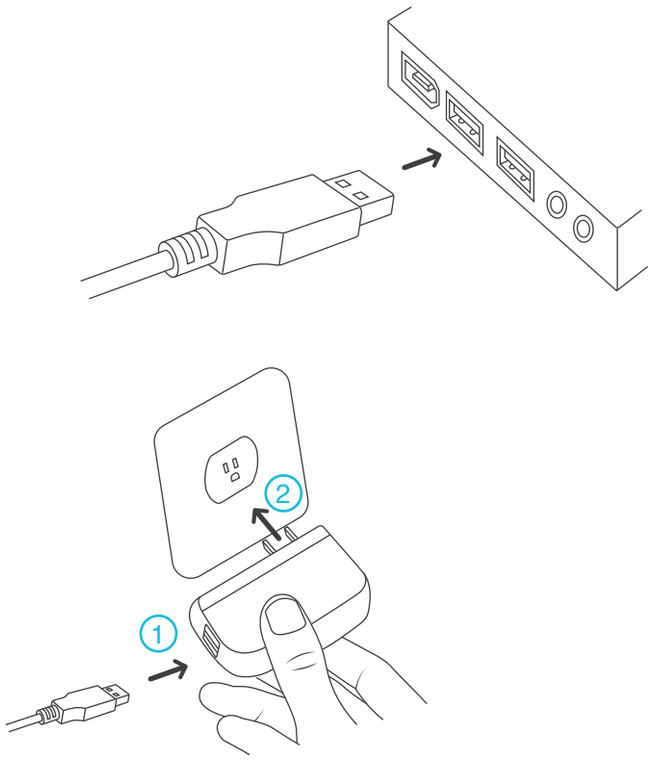

T-SERIES

Plug the fan unit's USB plug into the USB port located on the back of the thermal control unit. Then plug the wall adapter's male connector into the thermal controller's power plug, also located on the back. Lastly, plug the power adapter into an outlet.

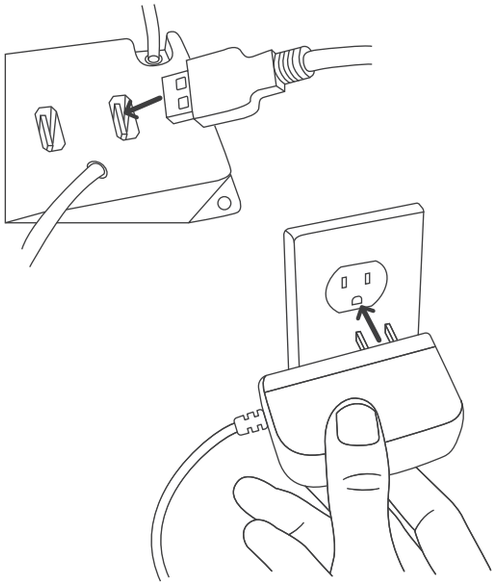

CONNECTING MORE FANS

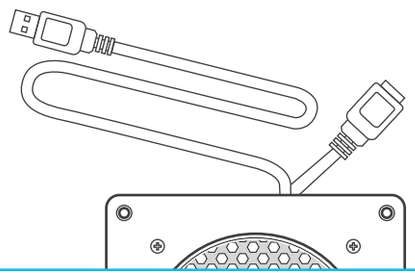

Each fan unit includes an USB port that enables you to connect an additonal fan. Up to four fans can share the same USB port, and up to six fans can share the same power outlet. Please see page 16 for limitations.

T-SERIES CONTROLLER

Thermal controllers can control up to six fans. Some models may contain more than one fan. For example AIRPLATE S7 contains two fans and AIRPLATE S9 contains three fans. Fan units connected to the thermal controller will share the same speed and temperature settings. If the fans contain an inline speed controller, please make sure their speed is set on high.

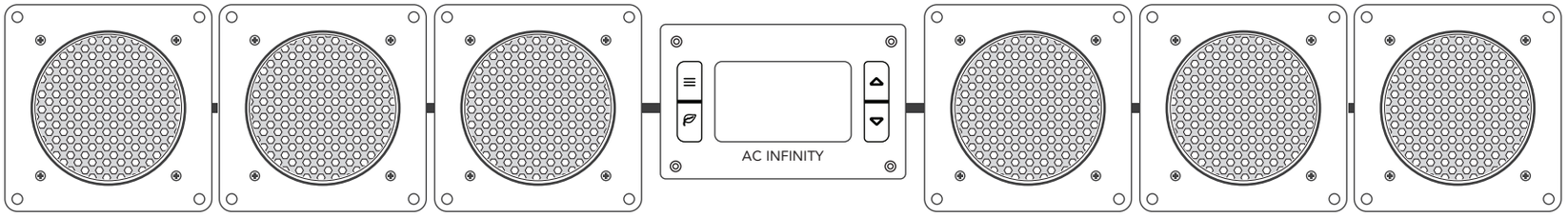

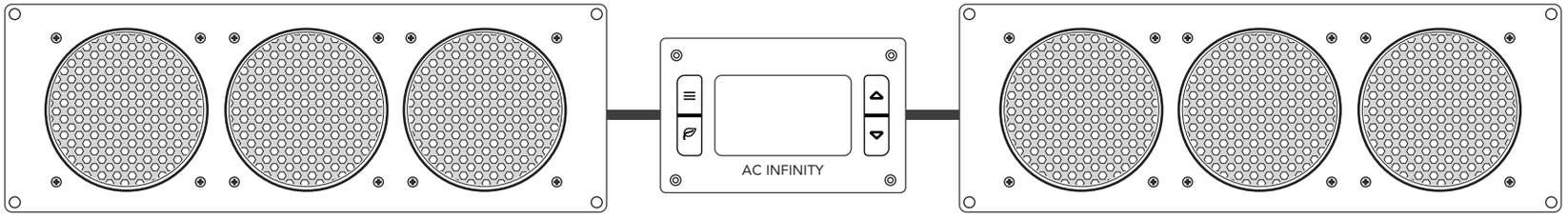

S-SERIES CONTROLLER

SPEED CONTROLLER

The speed controller located on the cord allows you to adjust the fan's speed from off to low, medium, and high. Any fans that are daisy chained will also have their speed changed. All setups with more than four daisy-chained fans must have their inlinespeed controller set to high to prevent overloading the speed controller, e.g. two AIRPLATE S9 units daisy-chained together must have their speeds set to high. Please note that AIRPLATE S3/T3 contains one fan, AIRPLATE S7/T7 contains two fans, and AIRPLATE S9/T9 contains three fans.

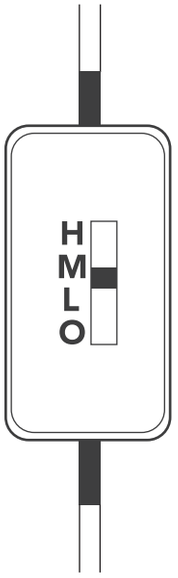

TURBO BOOST ADAPTER

The Boost Adapter is designed to maximize the performance of our fans. Using the adapter will increase the fan's speed by up to 25%. If the higher speed is too loud for your application, use the speed controller to reduce the noise level.

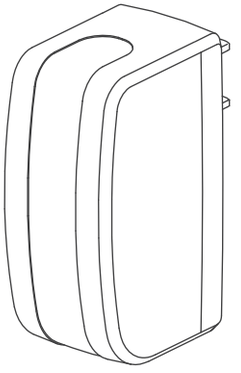

T-SERIES CONTROLLER

PROGRAMMING

1. MODE BUTTON
Cycles through the unit's modes: AUTO, SMART, OFF, ON, ALARM. Hold for three seconds will lock or unlock the display.

2. UP / DOWN BUTTON
The up and down buttons change the setting temp, alarm temp, display brightness, or the speed of the fan.

3. LEAF BUTTON
This turns the display off while allowing the programs to run. Holding will change degrees to Fahrenheit or Celsius.

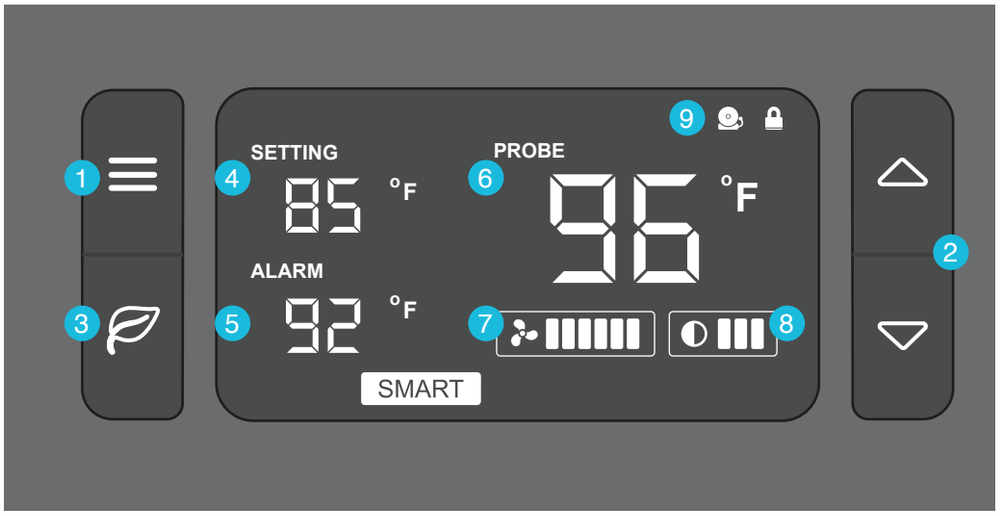

4. SETTING TEMP
Shows the temperature you set the fans to trigger in AUTO and SMART Mode.

5. ALARM TEMP
Shows the temperature that you set the fan's alarm system to trigger.

6. PROBE TEMP
Actively shows current temperature that the probe is measuring.

7. FAN SPEED
Shows what speed the fans are currently running at. Six speeds are available.

8. BRIGHTNESS
Shows the brightness of the display. Four settings are available.

9. ALERT ICONS
Flashes to indicate if alarm, or display lock is being triggered.

T-SERIES CONTROLLER
PROGRAMMING

QUICK START
Press the MODE button until you are on AUTO mode. This mode works like a thermostat. Then press the up and down triangle buttons to change the SETTING temperature on the screen. The PROBE temperature is what the thermal probe is measuring. When the PROBE temperature exceeds the SETTING temperature, the fans will start running.

ON MODE
In this mode, the fans will run non-stop regardless of temperature. Pressing the up and down buttons while in this mode will change the speed of the fan. Whichever speed is designated in this mode will also be the speed used in AUTO Mode and the max speed of the fans in SMART Mode.

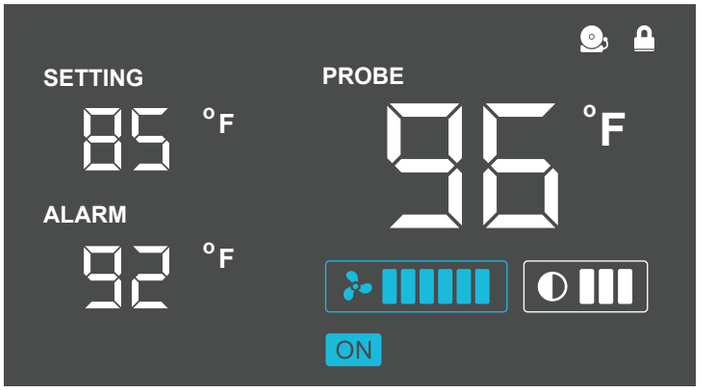

AUTO MODE
This is the thermostat setting where the fans will start running when the PROBE temperature reaches or surpasses the SETTING temperature. The SETTING temperature can be designated by pressing the up and down buttons while in this mode. Once the fans start running, the PROBE temperature would need to fall at least 4° F below the SETTING temp for the fans to stop running. This variation buffer can be changed to 2° F.
See page 21 for more information.

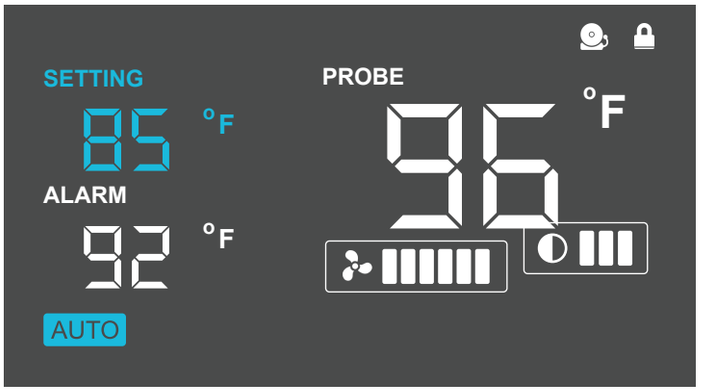

T-SERIES CONTROLLER
PROGRAMMING

OFF MODE
In this mode, the fans are powered off regardless of set temperature or set speed. The backlight setting can be increased or decreased by pressing the up or down buttons while in this mode. If the first and the third brightness bar light up and the device is left unattended for 30 seconds, the display will automatically dim its brightness back to the dimmest setting.

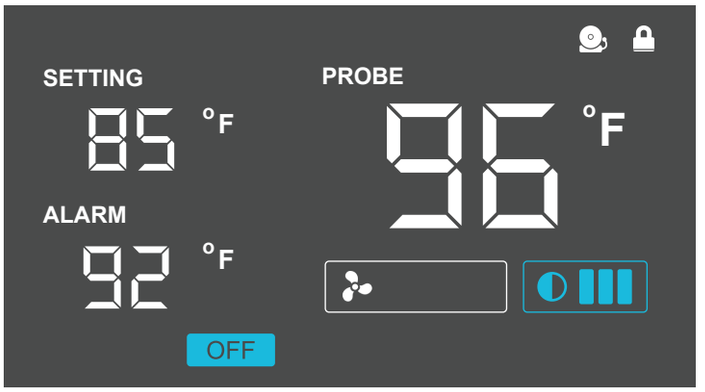

SMART MODE
This is the energy saving mode where the fans will change speed depending on the temperature. The SETTING temperature can be designated by pressing the up and down triangle buttons while in this mode. For every 4°F increment that the PROBE temperature is below the SETTING temperature, the speed of the fans will decrease by one level. This increment can be changed to 2°F; please see page 21 for more information. The fan speed you designated in ON Mode will also be the max speed the fan's can reach. This occurs when the PROBE temperature reaches or exceeds the SETTING temperature.

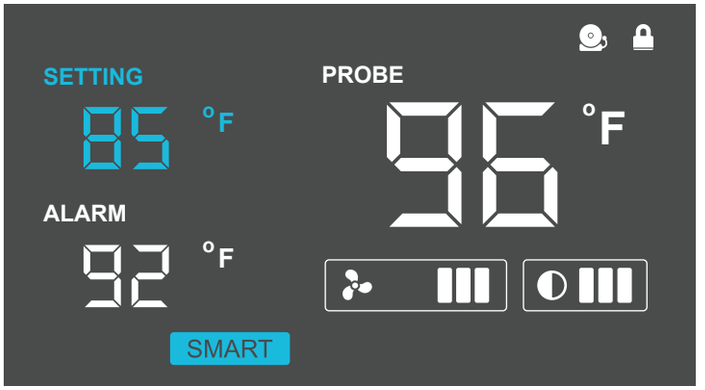

T-SERIES CONTROLLER
PROGRAMMING

ALARM SETTING

In this mode, you can set what temperature the system's alarm will trigger by pressing the up and down triangle buttons. When the PROBE temperature reaches or exceeds the ALARM temperature, the alarm will activate. The alarm will only activate while the controller is in ON, AUTO, or SMART Mode so please remember to exit ALARM Mode once the alarm has been set. When the alarm is triggered, the fan's will run at max speed regardless of mode and will make an audible beep every three seconds. This will keep occurring until the temperature drops below the ALARM temp or if any buttons are pressed. The alarm can be disabled by pressing the triangle button until the ALARM temp says " OFF"

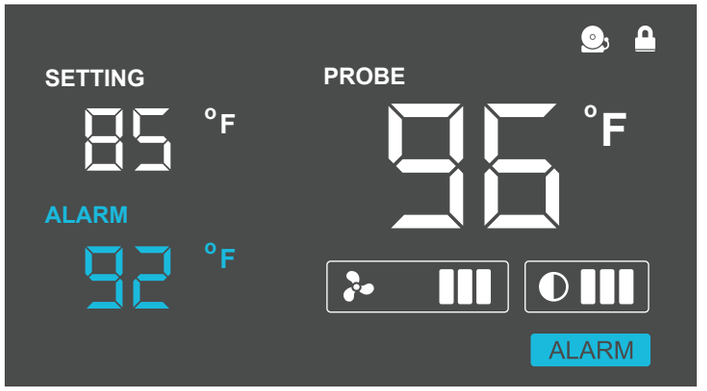

FAHRENHEIT OR CELSIUS

The temperatures displayed can be set to Fahrenheit or Celsius scale by holding the LEAF button until °F or °C is shown after the digits. All digits displayed will be automatically converted to the designated scale. (For Controller 8, hold the ZONE CHANGE button instead.)

T-SERIES CONTROLLER
PROGRAMMING

VARIATION BUFFER

In AUTO mode, a buffer is built in to prevent your fan from turning on and off too quickly due to small variations in the environment. When the PROBE temperature exceeds your SETTING temperature, the fan will start running immediately. However, the PROBE temperature will need to fall below your SETTING temperature by 4° Fahrenheit or 2° Celsius or more, to stop the fans from running. In SMART mode, the speed of the fan will decrease by one level for every 4° Fahrenheit or 2° Celsius that the PROBE temperature is below the SETTING temperature. To change this buffer or increment setting to 2° Fahrenheit or 1° Celsius, hold the MODE button and DOWN button together for three seconds. To change back to 4° Fahrenheit or 2° Celsius, hold the MODE button and UP button together for three seconds.

CONTROLLER LOCK

Holding the MODE button for three or more seconds will lock the controller. The controller will still work as programmed; however, pressing any buttons will not have an effect and will cause the screen lock icon to flash. This option was designed to prevent your controller settings from being changed by accident. Holding the MODE button again for three or more seconds will unlock the controller.

T-SERIES CONTROLLER
PROGRAMMING

ALERT ICONS
On the top right of the display there are two alert icons. They are visible to show that the system's functions are being monitored. They will flash when the controller wishes to alert you that a particular function is being triggered.

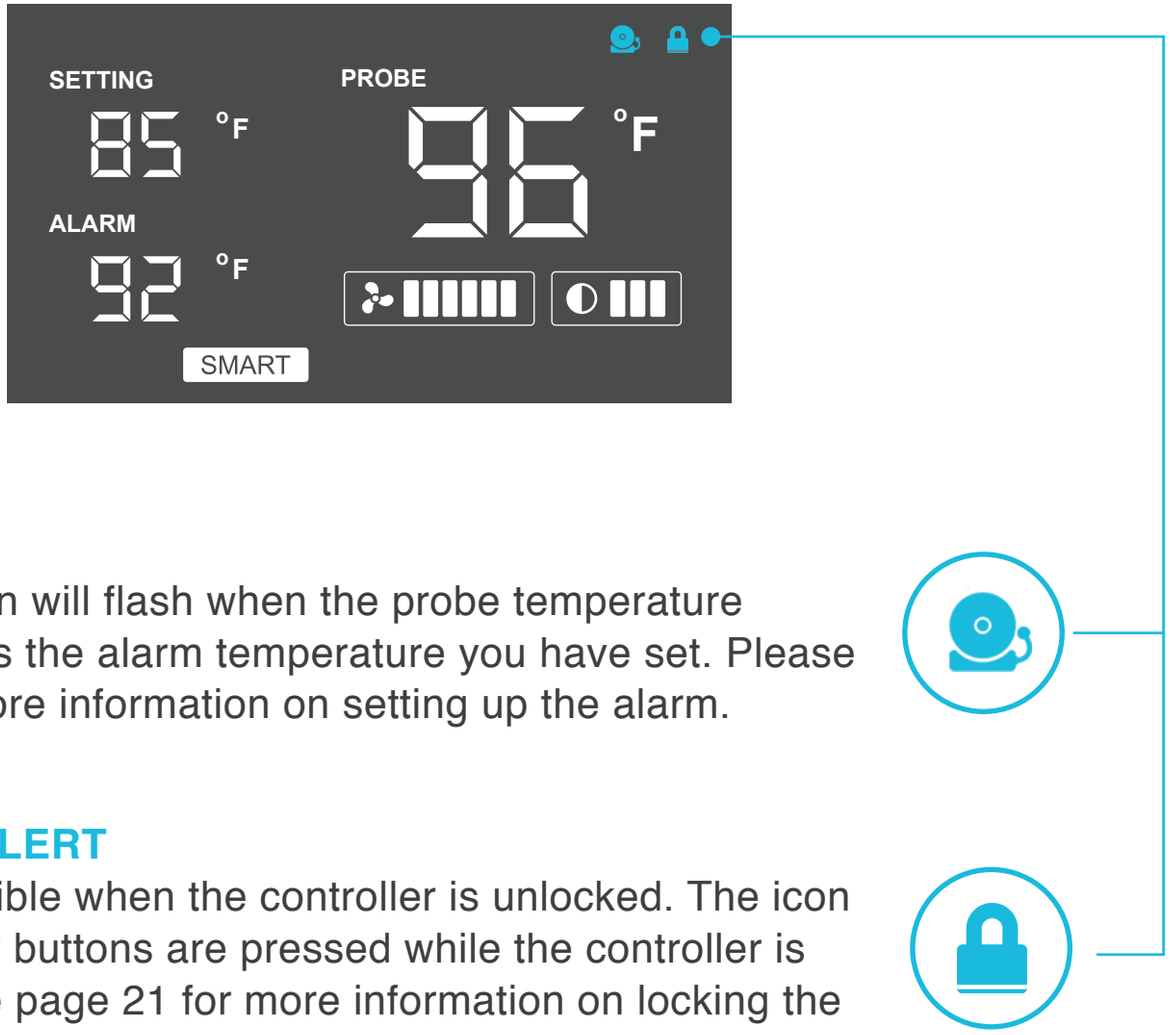

ALARM ALERT
The alarm alert icon will flash when the probe temperature reaches or exceeds the alarm temperature you have set. Please see page 20 for more information on setting up the alarm.

DISPLAY LOCK ALERT
This icon is not visible when the controller is unlocked. The icon will flash when any buttons are pressed while the controller is locked. Please see page 21 for more information on locking the display.

MULTIZONE CONTROLLER

CONTROLLER 8

MULTIZONE CONTROLLER

The Multizone controller enables you to control cooling fans in four different zones with independent programming settings for each zone. Pressing the zone change button will cycle through these zones as shown by A, B, C, and D icons on the LCD display. On the back side of the controller, there will be one probe and fan port underneath each corresponding A, B, C, and D designation.

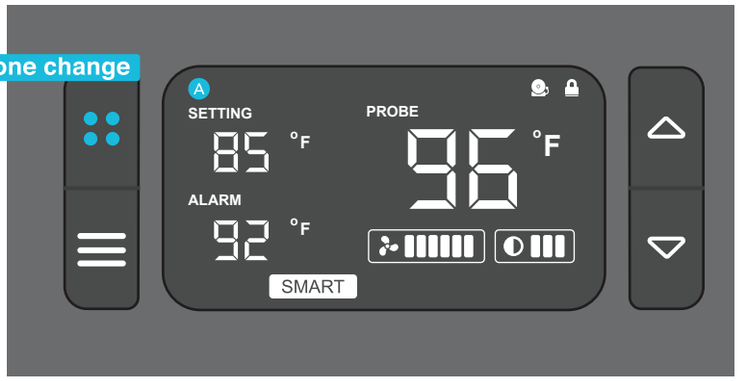

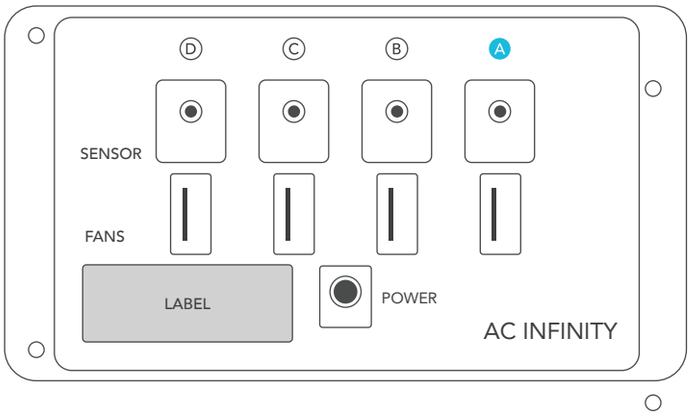

PROGRAMMING MODES

For every zone, you may press the MODE button to cycle through the programming modes: Auto, Smart, On, Off, and Alarm. The modes work the same way as the standard controller and each zone can have its own custom mode settings. Please refer to pages 17 to 22 for programming instructions but with the differences listed below.

OTHER SETTING DIFFERENCES

- Hold the ZONE button to set the display to Fahrenheit or Celsius, page 17.
- Hold the MODE button to lock or unlock the display, page 21.
- Hold ZONE and MODE buttons to turn the display off while programs run, page 17.
- Hold UP and DOWN buttons to reset the controller to factory settings.

AIRPLATE FAQ

AIRPLATE SERIES

For common questions on your fan unit we have created an faq for your convience, if you have any further questions that you don't see included plase email us at support@acinfinity.com and we would be happy to help you!

Q: Can I mount this cabinet fan vertically?
A: Yes. The AIRPLATE can be mounted in any orientation, including vertically.

Q: How do I flip the fan to create intake or exhaust airflow?
A: To flip the fan blades, unscrew the bolts from the frontplate and the body. Flip the fans within the body and screw the bolts back in. This does not apply to the AIRPLATE S2.

Q: Can I splice the cables to extend them or use my own probe?
A: We do not recommend hardwiring or splicing our fan's power wires. Such modifications may compromise electrical safety and will void this product's warranty.

Q: Does this fan fit with filters?
A: The AIRPLATE fan is not compatible with any filters.

Q: Will I be able to mount this fan on a wall?
A: This product is not specifically designed to be mounted on or through a wall.

Q: Is this fan fit for outside applications?
A: This product is not specifically designed for outside use.

Q: Is it normal to hear a humming sound after flipping the fan?
A: A humming noise that occurs after flipping the fan from exhaust to intake is normal and will not impact performance.

Q: How many additional fans can I connect with my cabinet fan?
A: Up to four fans can share the same USB power source. Up to six fans can share the same thermal controller or wall outlet power source.

AC INFINITY PRODUCTS

AIRCOM SERIES

The AIRCOM component fan system cools receivers, amplifiers, and other AV components. S-Series models feature a thermal trigger and speed control. T-Series features a LCD digital display with thermal and speed control, alarm alerts, failure triggers, and backup memory.

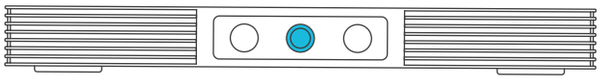

PRODUCT	MODEL	DIMENSIONS
AIRCOM S6	AI-ACS6	11.6 x 6.3 x 1.5 in.
AIRCOM S7	AI-ACS7	11.6 x 6.3 x 1.5 in.
AIRCOM S8	AI-ACS8	17 x 13.5 x 1.5 in.
AIRCOM S9	AI-ACS9	17 x 13.5 x 1.5 in.
AIRCOM T8	AI-ACT8	17 x 13.5 x 1.5 in.
AIRCOM T9	AI-ACT9	17 x 13.5 x 1.5 in.

MULTIFAN SERIES

The MULTIFAN series fans can be placed on top of AV components and electronics to exhaust hot air economically. It features an inline speed controller and can be powered by an USB port. The fans can also be powered through a power outlet with a Boost Speed Adapter (sold separately).

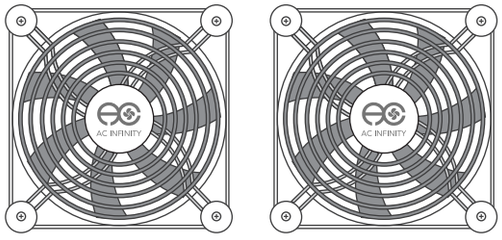

PRODUCT	MODEL	DIMENSIONS
MULTIFAN S1	AI-MPF80A	3.1 x 3.1 x 1 in.
MULTIFAN S3	AI-MPF120A	4.7 x 4.7 x 1 in.
MULTIFAN S4	AI-MPF140A	5.5 x 5.5 x 1 in.
MULTIFAN S5	AI-MPF80A2	3.1 x 3.1 x 1 in. /fan
MULTIFAN S7	AI-MPF120A2	4.7 x 4.7 x 1 in. /fan

WARRANTY

This warranty program is our commitment to you, the product sold by AC Infinity will be free from defects in manufacturing for a period of two years from the date of purchase. If a product is found to have a defect in material or workmanship, we will take the appropriate actions defined in this warranty to resolve any issues.

The warranty program applies to any order, purchase, receipt, or use of any products sold by AC Infinity or our authorized dealerships. The program covers products that have become defective, malfunctioned, or expressively if the product becomes unusable. The warranty program goes into effect on the date of purchase. The program will expire two years from the date of purchase. If your product becomes defective during that period, AC Infinity will replace your product with a new one or issue you a full refund.

The warranty program does not cover abuse or misuse. This includes physical damage, submersion of the product in water, incorrect Installation such as wrong voltage input, and misuse for any reason other than intended purposes. AC Infinity is not responsible for consequential loss or incidental damages of any nature caused by the product. We will not warrant damage from normal wear such as scratches and dings.

For more information about our dealers and distributors, please contact our customer service at support@acinfinity.com or (626) 923-6399 Monday to Friday (9:00 am to 5:00 pm PST).



If you are not 100% satisfied with this product, we will be happy to replace it or issue you a full refund. Please contact us!

COPYRIGHT © 2021 AC INFINITY INC. ALL RIGHTS RESERVED
No part of the materials including graphics or logos available in this booklet may be copied, photocopied, reproduced, translated or reduced to any electronic medium or machine readable form, in whole or in part, without specific permission from AC Infinity Inc.

www.acinfinity.com