HONDA
Power
Equipment

Owner's Manual

GENERATOR

EB3800X•EB5000X•EB6500X

Click here to save this manual to your computer.

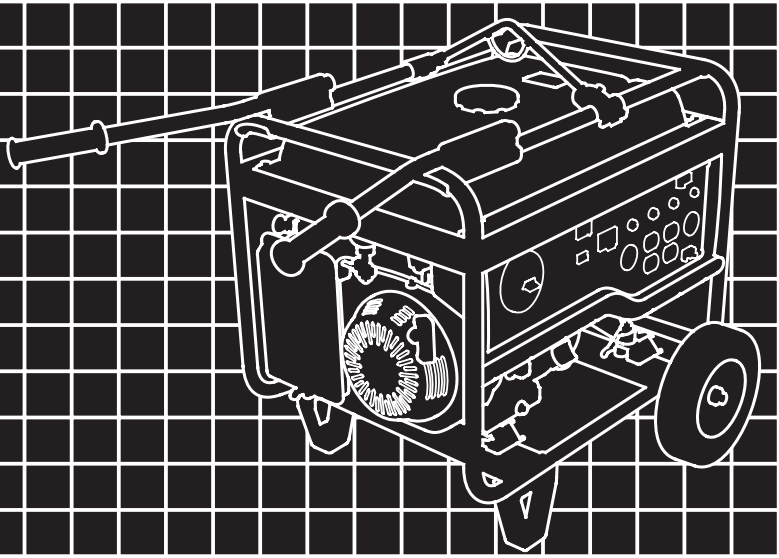

© 2003 Honda Motor Co., Ltd. -Al Rights Reserved

⚠ WARNING: ⚠

The engine exhaust from this product contains chemicals known to the State of California to cause cancer, birth defects or other reproductive harm.

⚠WARNING

Exhaust contains poisonous carbon monoxide gas that can build up to dangerous levels in closed areas.
Breathing carbon monoxide can cause unconsciousness or death.

Never run the generator in a closed, or even partly closed area where people may be present.

⚠WARNING

The generator is a potential source of electrical shock if misused. Do not expose the generator to moisture, rain or snow. Do not let the generator get wet, and do not operate it with wet hands.

Keep this owner's manual handy so that you can refer to it at any time. This owner's manual is considered a permanent part of the generator and should remain with the generator if resold.

The information and specifications included in this publication were in effect at the time of approval for printing. Honda Motor Co., Ltd. reserves the right, however, to discontinue or change specifications or design at any time without notice and without incurring any obligation whatever. No part of this publication may be reproduced without written permission.

Congratulations on your selection of a Honda generator. We are certain you will be pleased with your purchase of one of the finest generators on the market.

We want to help you get the best results from your new generator and to operate it safely. This manual contains the information on how to do that; please read it carefully.

As you read this manual, you will find information preceded by a NOTICE symbol. That information is intended to help you avoid damage to your generator, other property, or the environment.

We suggest you read the warranty policy to fully understand its coverage and your responsibilities of ownership. The warranty policy is a separate document that should have been given to you by your dealer.

When your generator needs scheduled maintenance, keep in mind that your Honda servicing dealer is specially trained in servicing Honda generators. Your authorized Honda servicing dealer is dedicated to your satisfaction and will be pleased to answer your questions and concerns.

Best Wishes,
Honda Motor Co., Ltd.

A FEW WORDS ABOUT SAFETY

Your safety and the safety of others are very important. And using this generator safely is an important responsibility.

To help you make informed decisions about safety, we have provided operating procedures and other information on labels and in this manual. This information alerts you to potential hazards that could hurt you or others.

Of course, it is not practical or possible to warn you about all the hazards associated with operating or maintaining a generator. You must use your own good judgement.

You will find important safety information in a variety of forms, including:

- **Safety Labels** — on the generator.
- **Safety Messages** — preceded by a safety alert symbol ⚠ and one of three signal words, DANGER, WARNING, or CAUTION.

  These signal words mean:

  ⚠ DANGER — You WILL be KILLED or SERIOUSLY HURT if you don't follow instructions.

  ⚠ WARNING — You CAN be KILLED or SERIOUSLY HURT if you don't follow instructions.

  ⚠ CAUTION — You CAN be HURT if you don't follow instructions.

- **Safety Headings** — such as *IMPORTANT SAFETY INFORMATION*.
- **Safety Section** — such as *GENERATOR SAFETY*.
- **Instructions** — how to use this generator correctly and safely.

This entire book is filled with important safety information — please read it carefully.

CONTENTS

GENERATOR SAFETY 5
- Safety Label Locations 5
- Important Safety Information 6

COMPONENT IDENTIFICATION 8
CONTROLS 10
- Engine Switch 10
- Starter Grip 10
- Fuel Valve Lever 11
- Choke Rod 11
- Voltage Selector Switch (Dual Voltage System) 12
- Ground Terminal 12
- Oil Alert® System 13
- Auto Throttle® System 13
- Circuit Breaker 14
- Circuit Protector 15
- Ground Fault Circuit Interrupter (GFCI) 16

GENERATOR USE 20
- Connections to a Building's Electrical System 20
- Ground System 20
- Special Requirements 20
- AC Applications 21
- AC Operation 22
- AC Receptacle Selection 23
- Auto Throttle® System 29
- High Altitude Operation 30

PRE-OPERATION CHECK 31
- Engine Oil 31
- Refueling 32
- Fuel Recommendations 33

STARTING THE ENGINE/STOPPING THE ENGINE 34
MAINTENANCE 36
- The Importance of Maintenance 36
- Maintenance Safety 37
- Maintenance Schedule 38
- Engine Oil Change 39
- Air Cleaner Service 40
- Fuel Sediment Cup Cleaning 41
- Spark Plug Service 42
- Spark Arrester Maintenance 43

STORAGE 44
Storage Preparation 44
Cleaning 44
Fuel 44
Engine Oil 47
Storage Precautions 48
Removal From Storage 48
TRANSPORTING 49
TROUBLESHOOTING 50
TECHNICAL INFORMATION 52
Emission Control System Information 52
Air Index 54
WIRING DIAGRAM 55
SPECIFICATIONS 57
ASSEMBLY 60
WARRANTY SERVICE INFORMATION 68
DEALER LOCATOR INFORMATION 68
CUSTOMER SERVICE INFORMATION 68
Honda PUBLICATIONS 69
INDEX 70

SAFETY LABEL LOCATION

These labels warn you of potential hazards that can cause serious injury. Read them carefully.

If a label comes off or becomes hard to read, contact your Honda generator dealer for a replacement.

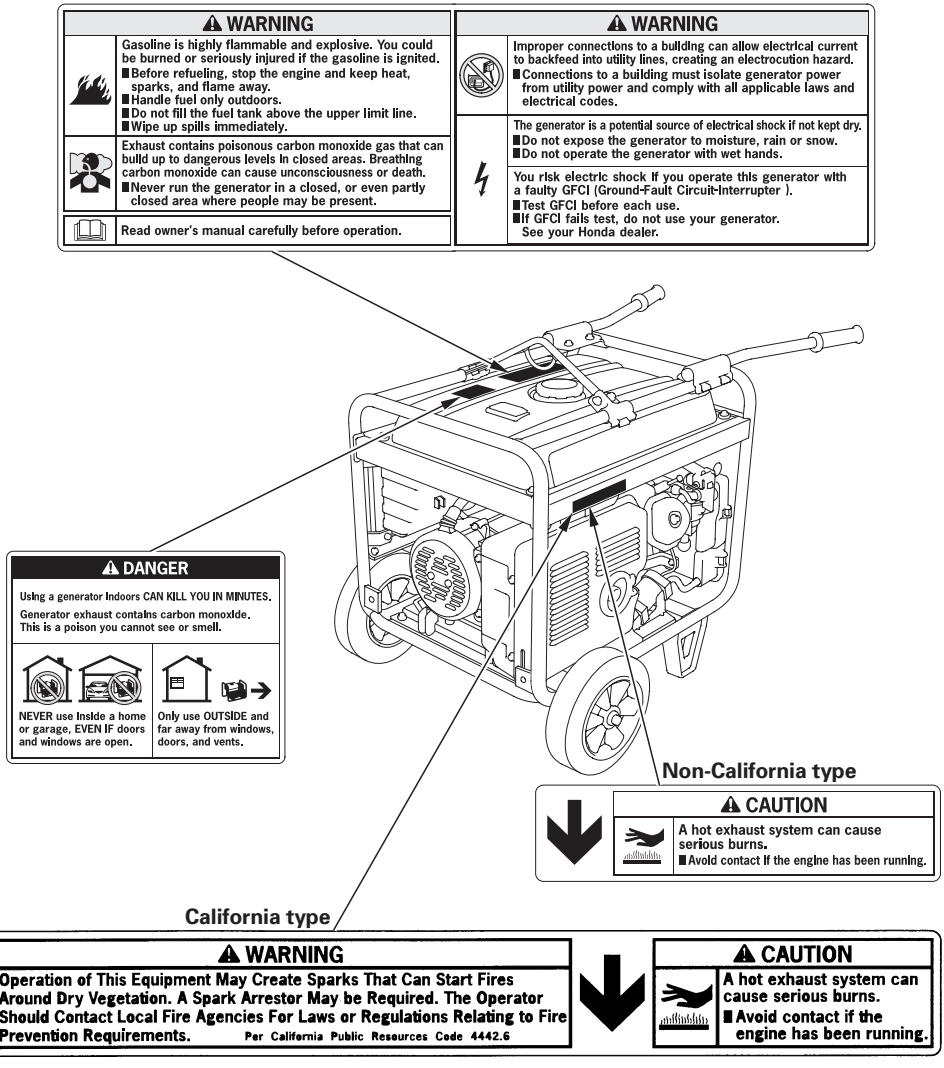

IMPORTANT SAFETY INFORMATION

Honda generators are designed to give safe and dependable service if operated according to instructions. Read and understand this owner's manual before operating your generator. You can help prevent accidents by being familiar with your generator's controls and by observing safe operating procedures.

Operator Responsibility

- Know how to stop the generator quickly in case of emergency. Understand the use of all generator controls, output receptacles, and connections.

- Be sure that anyone who operates the generator receives proper instruction. Do not let children operate the generator without parental supervision.

Carbon Monoxide Hazards

- Exhaust contains poisonous carbon monoxide, a colorless and odorless gas. Breathing carbon monoxide can cause loss of consciousness and may lead to death.

- If you run the generator in a confined or even partly enclosed area, the air you breathe could contain dangerous amount of exhaust gas.

- Never run your generator inside a garage, house, or near open windows or doors.

Electric Shock Hazards

- The generator produces enough electric power to cause a serious shock or electrocution if misused.

- Using a generator or electrical appliance in wet conditions, such as rain or snow, or near a pool or sprinkler system, or when your hands are wet, could result in electrocution. Keep the generator dry.

- If the generator is stored outdoors, unprotected from the weather, check the ground-fault circuit Interrupter (GFCI), and all other electrical components on the control panel, before each use. Moisture or ice can cause a malfunction or short circuit in electrical components that could result in electrocution.

- Do not connect to a building's electrical system unless an isolation switch has been installed by a qualified electrician.

- Do not connect to swimming pool equipment installed before adoption of the 1965 national electric code.

Fire and Burn Hazards

- The exhaust system gets hot enough to ignite some materials.
  - —Keep the generator at least 3 feet (1 meter) away from buildings and other equipment during operation.
  - —Do not enclose the generator in any structure.
  - —Keep flammable materials away from the generator.

- The muffler becomes very hot during operation and remains hot for a while after stopping the engine. Be careful not to touch the muffler while it is hot. Let the engine cool before storing the generator indoors.

- Gasoline is extremely flammable and is explosive under certain conditions. Do not smoke or allow flames or sparks where the generator is refueled or where gasoline is stored. Refuel in a well-ventilated area with the engine stopped.

- Fuel vapors are extremely flammable and may ignite after the engine has started. Make sure that any spilled fuel has been wiped up before starting the generator.

COMPONENT IDENTIFICATION

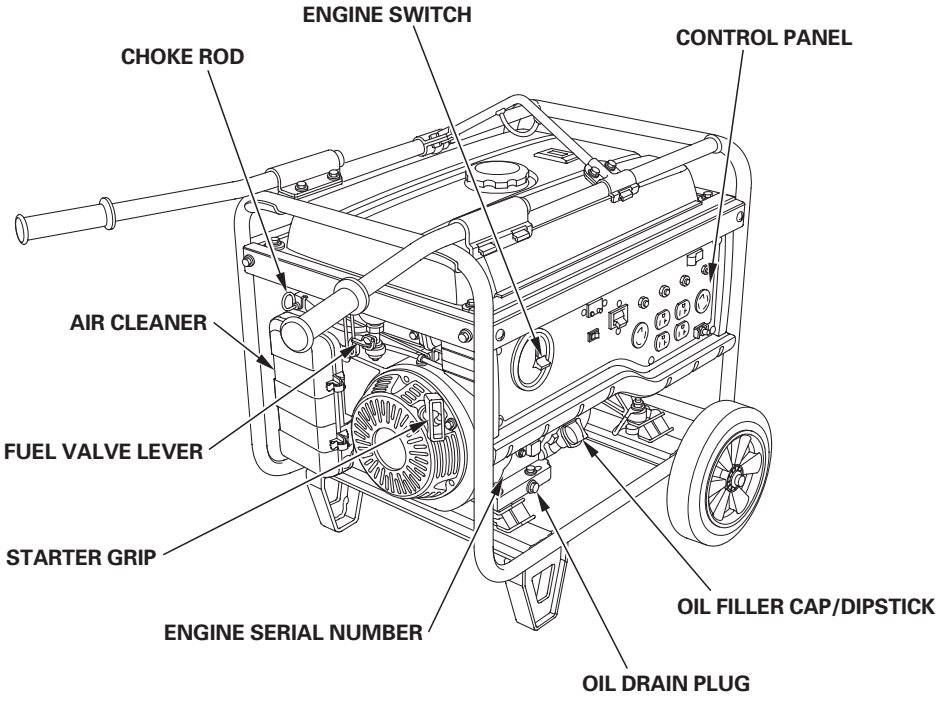

CONTROL PANEL

*1: Except EB3800X

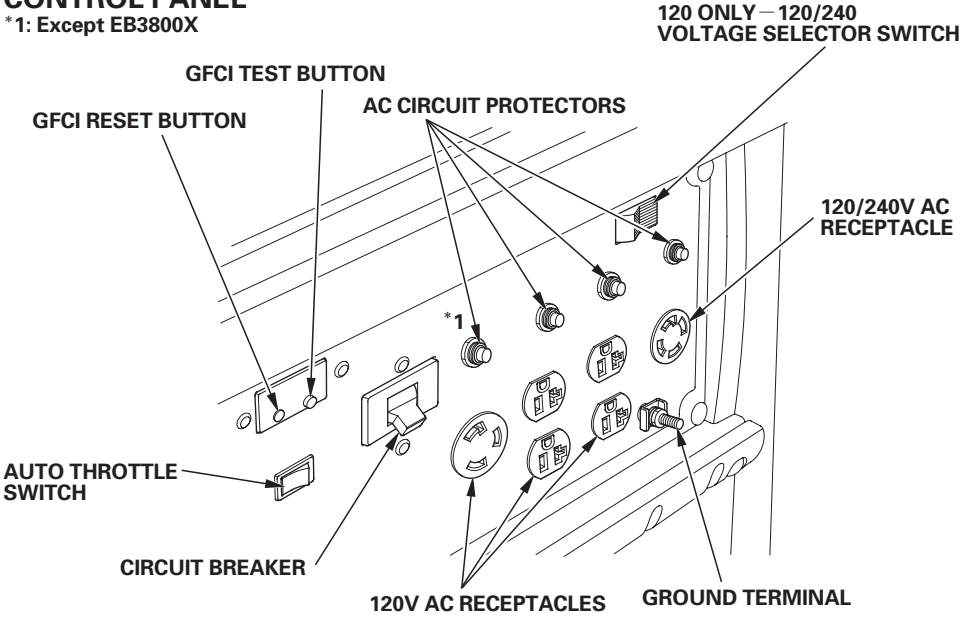

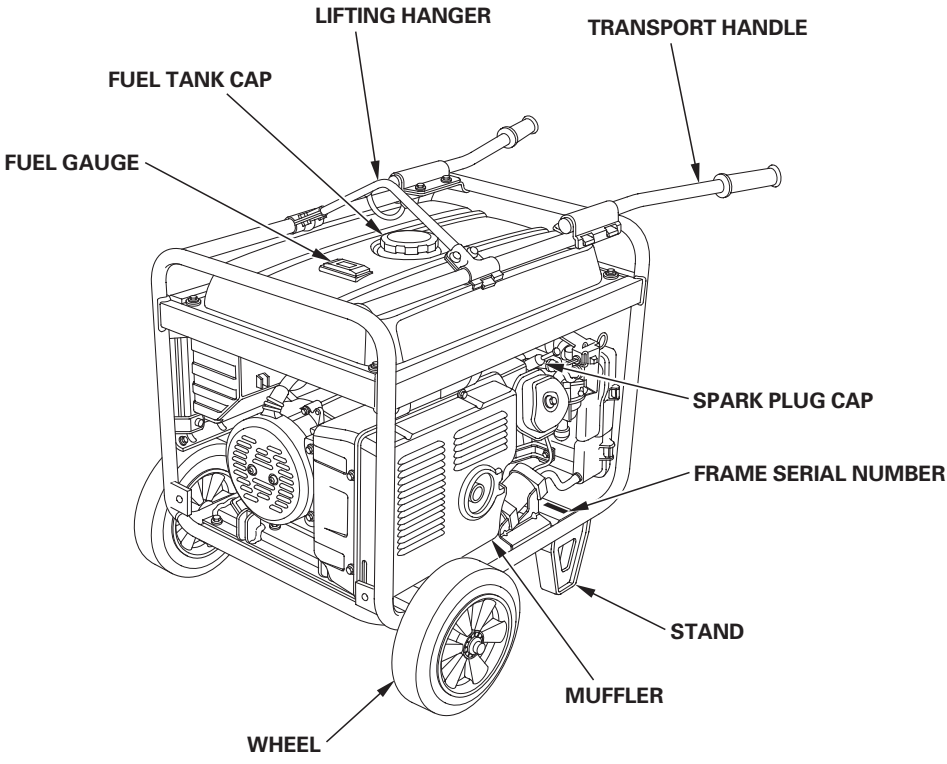

*Record the engine and frame serial numbers and date of purchase for your future reference. Refer to these serial numbers when ordering parts and when making technical or warranty inquiries (see page 68).

Engine serial number:_____

Frame serial number:_____

Date of purchase:_____

Engine Switch
To start and stop the engine.
Switch position:
OFF: To stop the engine.
ON: To run the engine.

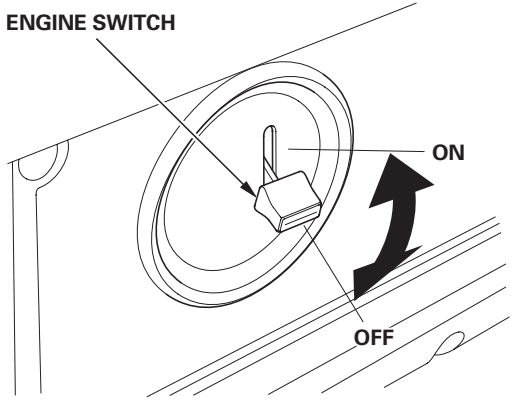

Starter Grip
To start the engine, pull the starter grip lightly until resistance is felt, and then pull briskly.

NOTICE

Do not allow the starter grip to snap back against the engine. Return it gently to prevent damage to the starter.

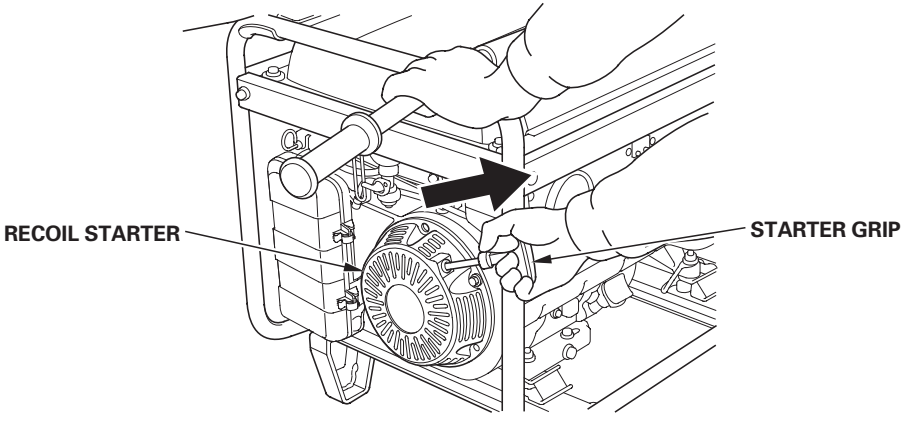

Fuel Valve Lever

The fuel valve is located between the fuel tank and carburetor. When the valve lever is in the ON position, fuel is allowed to flow from the fuel tank to the carburetor. Be sure to return the fuel valve lever to the OFF position after stopping the engine.

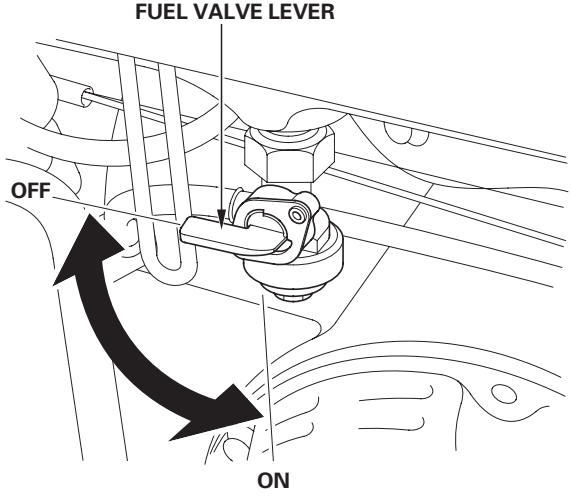

Choke Rod

The choke is used to provide an enriched fuel mixture when starting a cold engine. It can be opened and closed by operating the choke rod manually. Pull the rod out toward CLOSED to enrich the mixture for cold starting.

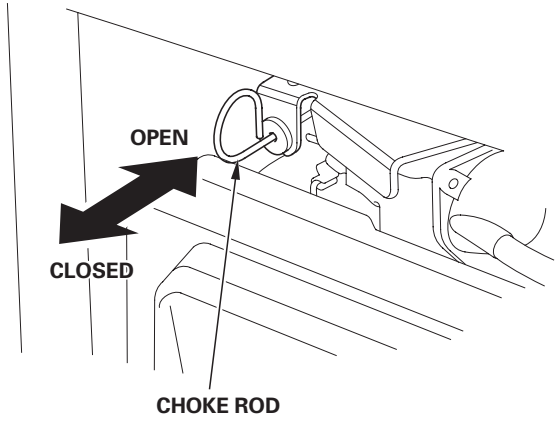

Voltage Selector Switch (Dual Voltage System)
The voltage selector switch switches the main power carrying windings of the generator to produce ''120V ONLY'' or ''120/240V''. If a 240V appliance is connected to the 4-prong receptacle, the switch must be in the ''120/240V'' position. If only a 120V appliance is being connected to any of the 120V 3-prong receptacles, select the ''120V ONLY'' position.

Switch Position

120/240V: The 120V and 120/240V receptacles can be used simultaneously.

120V ONLY: ONLY the 120V receptacles can be used. Do not use the 120/240V receptacle in this position. The most power will be available at the 30A 120V locking plug receptacle.

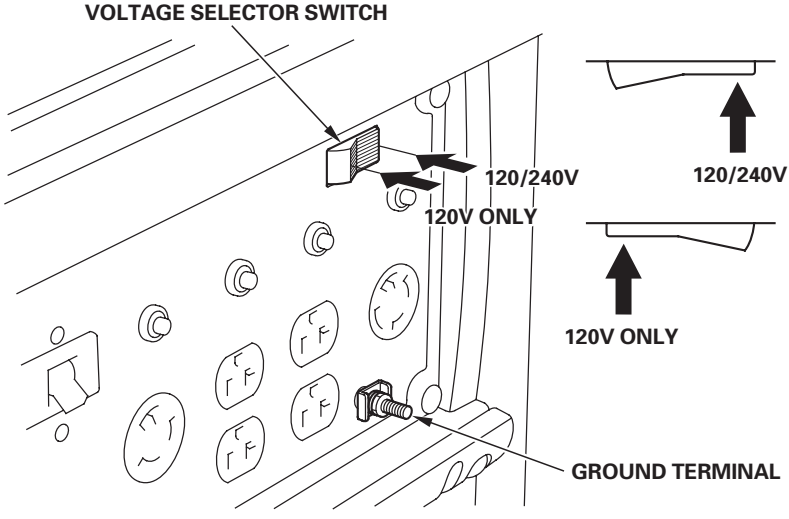

Ground Terminal
The generator ground terminal is connected to the frame of the generator, the metal non-current-carrying parts of the generator, and the ground terminals of each receptacle.

Before using the ground terminal, consult a qualified electrician, electrical inspector, or local agency having jurisdiction for local codes or ordinances that apply to the intended use of the generator.

Oil Alert® System

The Oil Alert® system is designed to prevent engine damage caused by an insufficient amount of oil in the crankcase. Before the oil level in the crankcase can fall below a safe limit, the Oil Alert system will automatically stop the engine (the engine switch will remain in the ON position). The Oil Alert system should not take the place of checking the oil level before each use.

If the engine stops and will not restart, check the engine oil level (see page 31) before troubleshooting in other areas.

Auto Throttle® System

The Auto Throttle® system automatically reduces engine speed when all loads are turned off or disconnected. When appliances are turned on or reconnected, the engine returns to the rated speed.

Switch Position

AUTO: Recommended to minimize fuel consumption and further reduce noise levels when no load is applied to the generator.

OFF: The Auto Throttle system does not operate.
Recommended to minimize warm-up time when the generator is started and when starting a load with large start-up power equipments.

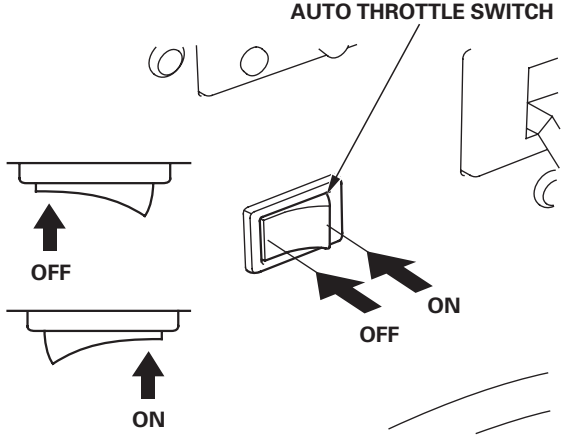

Circuit Breaker
The circuit breaker will automatically switch OFF if there is a short circuit or a significant overload of the generator at the receptacle, or if the ground fault circuit interrupter (GFCI) detects a ground fault current.

Check the following if the circuit breaker switches OFF automatically:

- When the GFCI RESET button is extended (page 18):
  — Unplug all appliances from the receptacles and check the appliance for any defects as described in TROUBLESHOOTING (page 50).

  After making repairs, push the GFCI RESET button then turn the circuit breaker ON.

- When the GFCI RESET button is not extended:
  — Check that the appliance is working properly and does not exceed the rated load capacity of the circuit before switching the circuit breaker ON again.

The circuit breaker may be used to switch the generator power on or off.

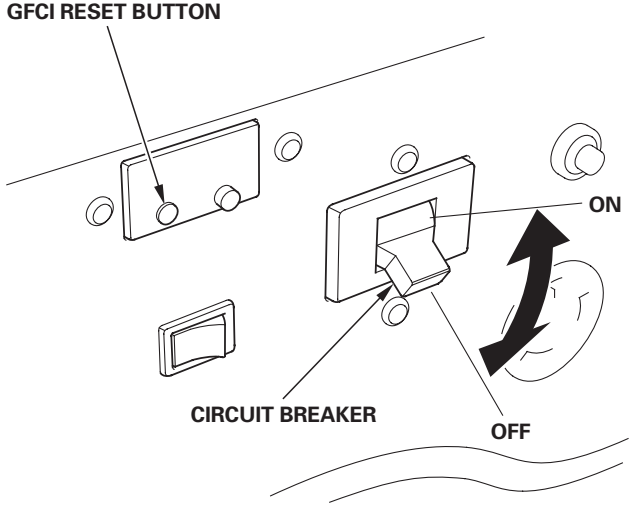

Circuit Protector

The circuit protectors will automatically switch OFF if there is a short circuit or a significant overload of the generator at the 20A 120V, 30A 120V locking plug, or 120/240V locking plug receptacle. If a circuit protector switches OFF automatically, check that the appliance is working properly and does not exceed the rated load capacity of the circuit before resetting the circuit protector ON.

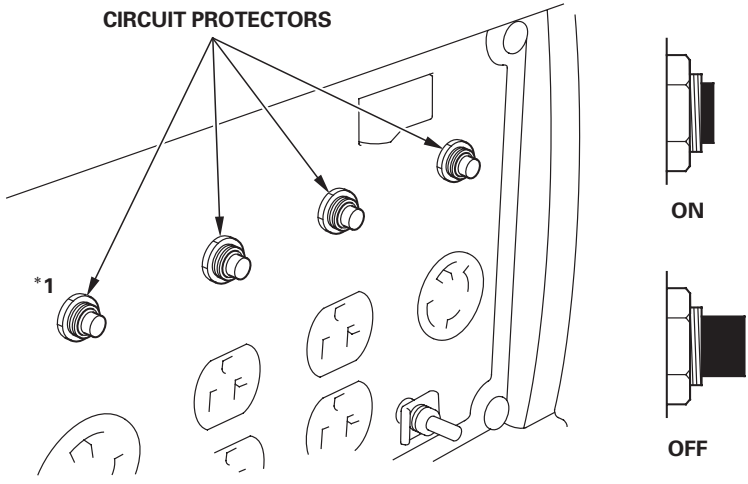

*1: Except EB3800X

Ground Fault Circuit Interrupter (GFCI)

⚠WARNING

Using the generator in rain or snow or near water can lead to death from electric shock. Keep the generator dry.

All receptacles on the generator are protected by a ground fault circuit interrupter (GFCI) for protection against the shock hazard of ground fault current. The GFCI has TEST and RESET buttons and is connected to the circuit breaker.

An example of ground fault current is the current that would flow through a person who is using an appliance with faulty insulation and, at the same time, is in contact with an electrical ground such as a plumbing fixture, wet floor, or earth.

The ground fault circuit interrupter will not protect against short circuits or overloads. The circuit breaker in the control panel that supplies power to the circuit provides that protection (refer to circuit breaker on page 14).

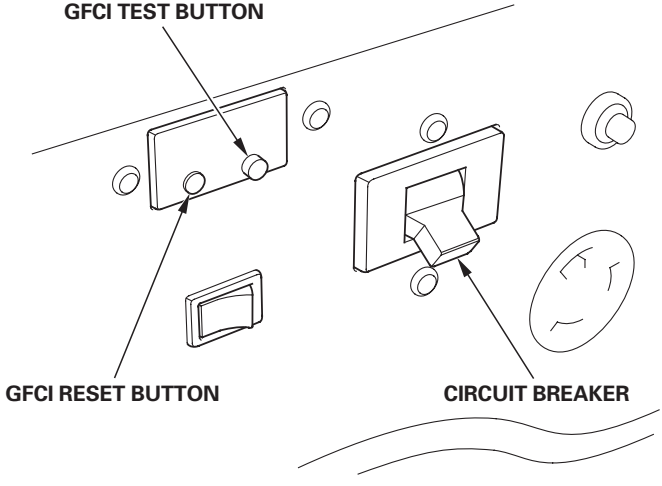

Observe the following precautions to ensure proper GFCI operation and to reduce shock hazards:

- Use grounded 3-conductor extension cords, tools, and appliances, or double-insulated tools and appliances.
- Inspect cords and plugs, and replace if damaged.
- Do not use cord lengths greater than 164 feet (50 meters), and do not use multiple tools and appliances with built-in noise filters. Such use may activate the GFCI and trip the circuit breaker.

Inspection:

Always check GFCI operation before using the generator.

⚠WARNING

You risk electric shock if you operate this generator with a faulty GFCI (ground fault circuit interrupter).

Test GFCI before use.

If the GFCI fails testing, do not use your generator. Contact your Honda dealer.

1. Unplug all tools and appliances from the generator.
2. Start the engine.
3. Turn the circuit breaker to the ON position.
4. Turn the Auto Throttle switch to the OFF position.
5. Press the GFCI TEST button. The RESET button should extend, and the circuit breaker should switch to the OFF position.

   If the GFCI and circuit breaker do not function as described, take the generator to an authorized Honda generator dealer for repair.

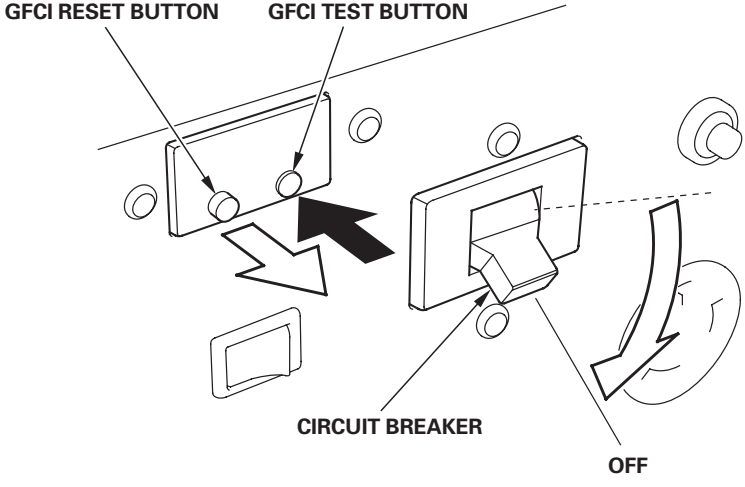

6. Press the GFCI RESET button. The RESET button should stay in, flush with its base plate.

   With the RESET button in and engine running, turn the circuit breaker to the ON position. The circuit breaker should remain in the ON position. The circuit breaker will not remain in the ON position if the RESET button is extended.

   If the GFCI and circuit breaker do not function as described, take the generator to an authorized Honda generator dealer for repair.

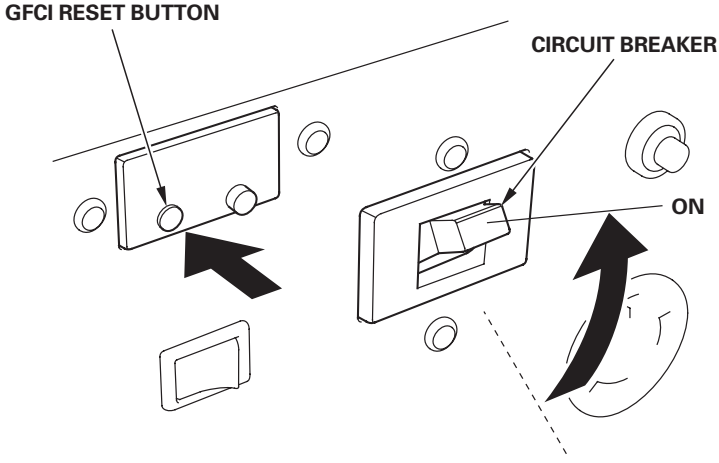

During generator use, if the GFCI RESET button extends and the circuit breaker trips, this usually indicates a faulty power tool, appliance, or cord.

If that occurs, perform test steps 1 through 6 to verify that the GFCI and circuit breaker are in proper working order. If the GFCI and circuit breaker test correctly, then you will know that the fault is in the power tool, appliance, or cord. Repair or replace the faulty power tool, appliance, or cord before further use.

GENERATOR USE

Connections to a Building's Electrical System

Connections for standby power to a building's electrical system must be made by a qualified electrician. The connection must isolate the generator power from utility power, and must comply with all applicable laws and electrical codes. A transfer switch, which isolates generator power from utility power, is available through authorized Honda generator dealers.

⚠WARNING

Improper connections to a building's electrical system can allow electrical current from the generator to backfeed into the utility lines. Such backfeed may electrocute utility company workers or others who contact the lines during a power outage, and the generator may explode, burn, or cause fires when utility power is restored. Consult the utility company or a qualified electrician.

Ground System

Honda portable generators have a system ground that connects generator frame components to the ground terminals in the AC output receptacles. The system ground is not connected to the AC neutral wire. If the generator is tested by a receptacle tester, it will show the same ground circuit condition as for a home receptacle.

Special Requirements

There may be Federal or State Occupational Safety and Health Administration (OSHA) regulations, local codes, or ordinances that apply to the intended use of the generator. Please consult a qualified electrician, electrical inspector, or the local agency having jurisdiction.

- In some areas, generators are required to be registered with local utility companies.
- If the generator is used at a construction site, there may be additional regulations that must be observed.

AC Applications
Before connecting an appliance or power cord to the generator:

- Make sure that it is in good working order. Faulty appliances or power cords can create a potential for electrical shock.

- If an appliance begins to operate abnormally, becomes sluggish, or stops suddenly, turn it off immediately. Disconnect the appliance, and determine whether the problem is the appliance or the rated load capacity of the generator has been exceeded.

- Make sure that the electrical rating of the tool or appliance does not exceed that of the generator. Never exceed the maximum power rating of the generator. Power levels between rated and maximum may be used for no more than 30 minutes.

NOTICE

Substantial overloading will open the circuit breaker. Exceeding the time limit for maximum power operation or slightly overloading the generator may not switch the circuit breaker or circuit protector OFF, but will shorten the service life of the generator.

Limit operation requiring maximum power to 30 minutes.
Maximum power is:
EB3800X: 3.8 kVA
EB5000X: 5.0 kVA
EB6500X: 6.5 kVA
For continuous operation (longer than 30 minutes), do not exceed the rated power.
Rated power is:
EB3800X: 3.3 kVA
EB5000X: 4.5 kVA
EB6500X: 5.5 kVA
The total power requirements (VA) of all appliances connected must be considered. Appliance and power tool manufacturers usually list rating information near the model number or serial number.

AC Operation

1. Check GFCI operation before each use (see page 18).
2. Start the engine (see page 34).
3. Turn the voltage selector switch to either position.
   With the voltage selector switch in the ''120/240V'' position, you can use the 120V and 120/240V receptacles simultaneously. If you are NOT using the 120/240V receptacle, then select the ''120V ONLY'' position.
4. Make sure that the GFCI RESET button is pushed in (flush with its base plate).
5. Switch ON the AC circuit breaker.
6. Plug in the appliance.

NOTICE

Be sure that all appliances are in good working order before connecting them to the generator. If an appliance begins to operate abnormally, becomes sluggish, or stops suddenly, turn off the ignition switch lever immediately. Then disconnect the appliance and examine it for signs of malfunction.

Most motorized appliances require more than their rated power for startup.

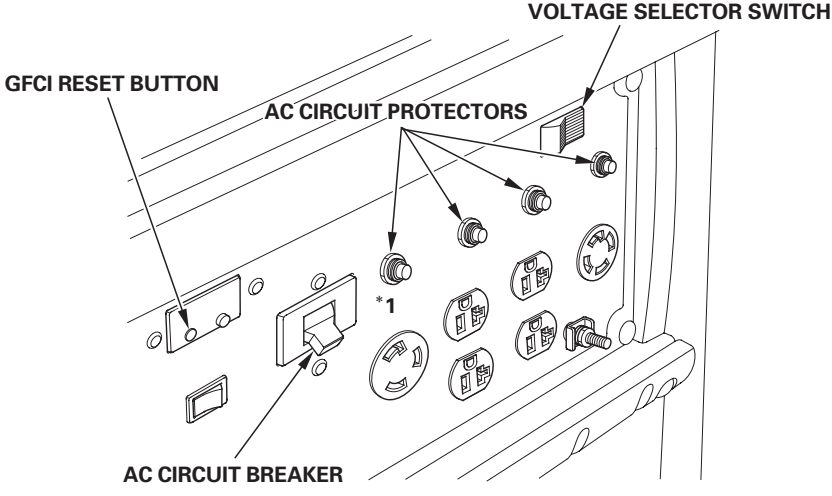

*1: Except EB3800X

Do not exceed the current limit specified for any one receptacle. If an overloaded circuit causes the AC circuit breaker or circuit protector to switch OFF, reduce the electrical load on the circuit, wait a few minutes and then reset the circuit breaker or circuit protector.

AC Receptacle Selection

The control panel, shown below, has a voltage selector switch and four receptacles. Receptacle #4, the 240-volt receptacle, has two powered terminals, 4A and 4B.

EB3800X:

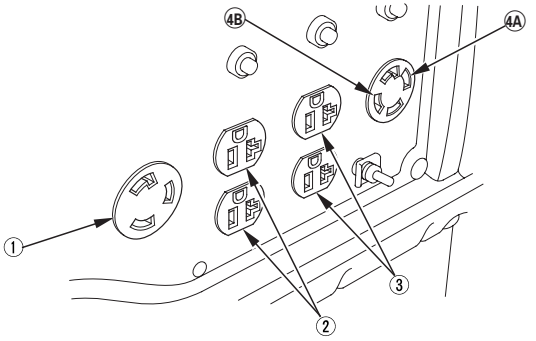

① 120V 30A
② 120V 20A (in total)
③ 120V 20A (in total)
④A & ④B 120/240V 20A

Power Producing Circuits

This generator is equipped with two power generating circuits. When the voltage selector switch is in the 120V/240V position, each of the two power producing circuits supplies power to specific receptacles. When the voltage selector switch is in the 120V ONLY position, the power producing circuits operate in parallel, sharing the total load connected to terminal 4A and receptacles 1, 2, and 3.

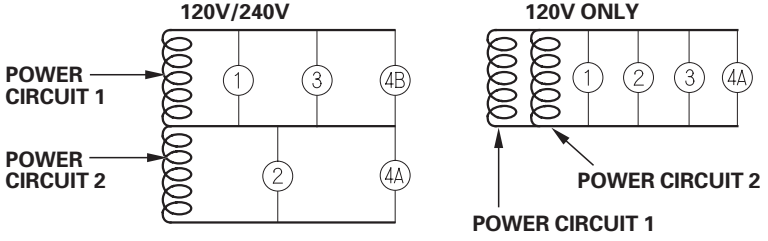

Voltage Selector Switch

The power available to each receptacle depends on the position of the voltage selector switch.

Switch Position	Receptacle	Available Power
120V ONLY	1	27.5A at 120V
	2	20A at 120V
	3	20A at 120V
	4A	20A at 120V
	4B	None
120V/240V	1	13.8A at 120V
	2	13.8A at 120V
	3	13.8A at 120V
	4A-4B	13.8A at 240V

120V ONLY Position
When the voltage selector switch is in the 120V ONLY position, you do not need to spread the load over the receptacles. You must, however, make sure the load on any receptacle does not exceed its available power shown in the preceding table and the total load does not exceed 27.5 amps.

120V/240V Position
When the voltage selector switch is in the 120V/240V position, you must balance the load. Divide the load between the two sets of receptacles shown below. Balancing is necessary because each set of receptacles is powered by only one power producing circuit that can produce a maximum of 13.8 amps.

Set of Receptacles	Total Current Available	Power Producing Circuit
1 + 3 + 4B	13.8A	1
2 + 4A	13.8A	2

The control panel, shown below, has a voltage selector switch and four receptacles. Receptacle # 4, the 240-volt receptacle, has two powered terminals, 4A and 4B.

EB5000X:

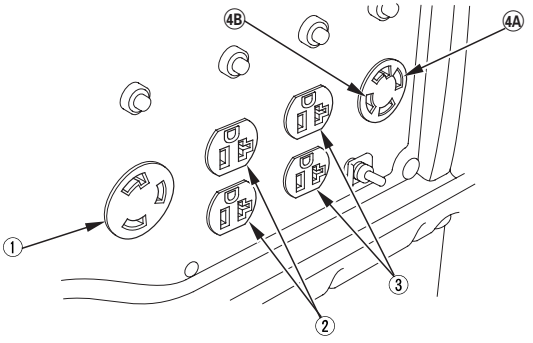

① 120V 30A
② 120V 20A (in total)
③ 120V 20A (in total)
④A & ④B 120/240V 30A

Power Producing Circuits

This generator is equipped with two power generating circuits. When the voltage selector switch is in the 120V/240V position, each of the two power producing circuits supplies power to specific receptacles. When the voltage selector switch is in the 120V ONLY position, the power producing circuits operate in parallel, sharing the total load connected to terminal 4A and receptacles 1, 2, and 3.

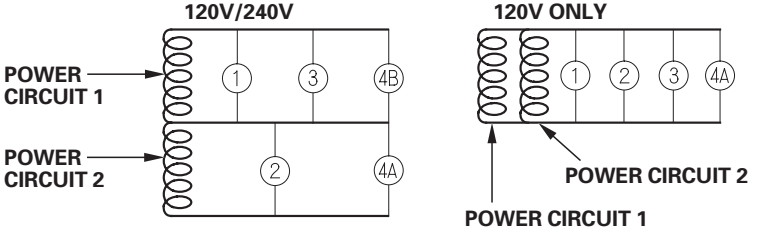

Voltage Selector Switch

The power available to each receptacle depends on the position of the voltage selector switch.

Switch Position	Receptacle	Available Power
120V ONLY	1	30A at 120V
	2	20A at 120V
	3	20A at 120V
	4A	30A at 120V
	4B	None
120V/240V	1	18.8A at 120V
	2	18.8A at 120V
	3	18.8A at 120V
	4A-4B	18.8A at 240V

120V ONLY Position
When the voltage selector switch is in the 120V ONLY position, you do not need to spread the load over the receptacles. You must, however, make sure the load on any receptacle does not exceed its available power shown in the preceding table and the total load does not exceed 37.5 amps.

120V/240V Position
When the voltage selector switch is in the 120V/240V position, you must balance the load. Divide the load between the two sets of receptacles shown below. Balancing is necessary because each set of receptacles is powered by only one power producing circuit that can produce a maximum of 18.8 amps.

Set of Receptacles	Total Current Available	Power Producing Circuit
1 + 3 + 4B	18.8A	1
2 + 4A	18.8A	2

The control panel, shown below, has a voltage selector switch and four receptacles. Receptacle # 4, the 240-volt receptacle, has two powered terminals, 4A and 4B.

EB6500X:

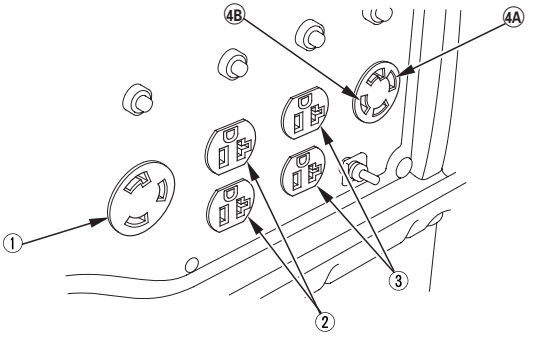

① 120V 30A
② 120V 20A (in total)
③ 120V 20A (in total)
④A & ④B 120/240V 30A

Power Producing Circuits

This generator is equipped with two power generating circuits. When the voltage selector switch is in the 120V/240V position, each of the two power producing circuits supplies power to specific receptacles. When the voltage selector switch is in the 120V ONLY position, the power producing circuits operate in parallel, sharing the total load connected to terminal 4A and receptacles 1, 2, and 3.

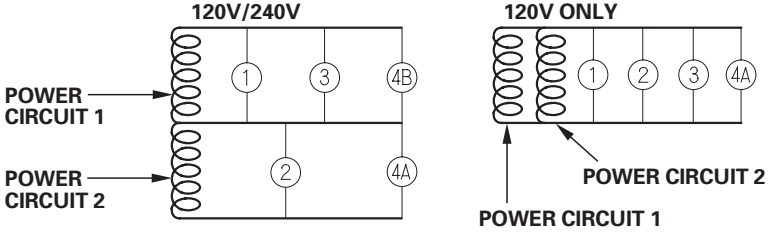

Voltage Selector Switch

The power available to each receptacle depends on the position of the voltage selector switch.

Switch Position	Receptacle	Available Power
120V ONLY	1	30A at 120V
	2	20A at 120V
	3	20A at 120V
	4A	30A at 120V
	4B	None
120V/240V	1	22.9A at 120V
	2	20A at 120V
	3	20A at 120V
	4A-4B	22.9A at 240V

120V ONLY Position

When the voltage selector switch is in the 120V ONLY position, you do not need to spread the load over the receptacles. You must, however, make sure the load on any receptacle does not exceed its available power shown in the preceding table and the total load does not exceed 45.8 amps.

120V/240V Position

When the voltage selector switch is in the 120V/240V position, you must balance the load. Divide the load between the two sets of receptacles shown below. Balancing is necessary because each set of receptacles is powered by only one power producing circuit that can produce a maximum of 22.9 amps.

Set of Receptacles	Total Current Available	Power Producing Circuit
1 + 3 + 4B	22.9A	1
2 + 4A	22.9A	2

Auto Throttle® System
With the switch in the AUTO position, engine speed is automatically reduced when ALL loads are turned OFF or disconnected. When appliances are turned ON or reconnected, the engine returns to rated speed. In the OFF position, the Auto Throttle system does not operate. The Auto Throttle system will not respond to electrical loads of less than 1 ampere or intermittent loads such as a staple gun. Turn the Auto Throttle switch to the OFF position to operate loads of less than 1 amp.

Appliances with large start-up power demands may not allow the engine to reach normal operating rpm when they are connected to the generator. Push the Auto Throttle switch to the OFF position and connect the appliance to the generator. If the engine still will not reach normal operating speed, check that the appliance does not exceed the rated load capacity of the generator.

To avoid extended warm-up periods, keep the switch OFF until the engine reaches operating temperature.

The Auto Throttle system is not effective for use with appliances that require only momentary power. If the tool or appliance will be turned ON and OFF quickly, the Auto Throttle switch should be in the OFF position.

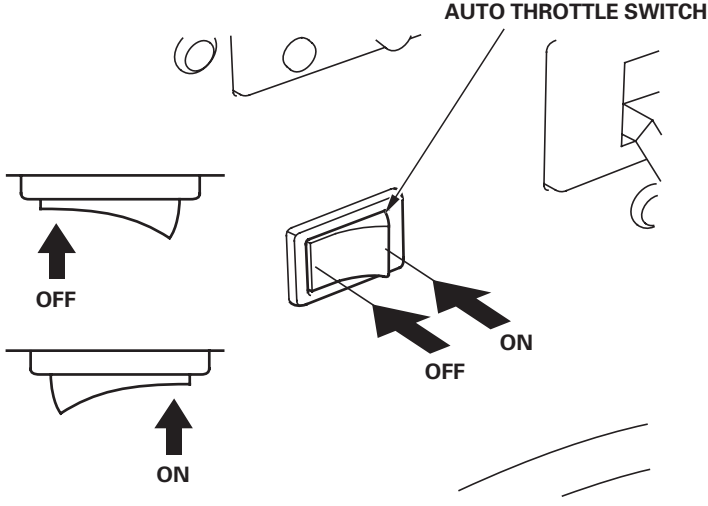

High Altitude Operation
At high altitude, the standard carburetor air/fuel mixture will be too rich. Performance will decrease, and fuel consumption will increase. A very rich mixture will also foul the spark plug and cause hard starting. Operation at an altitude that differs from that at which this engine was certified, for extended periods of time, may increase emissions.

High altitude performance can be improved by specific modifications to the carburetor. If you always operate your generator at altitudes above 5,000 feet (1,500 meters), have your dealer perform this carburetor modification. This engine, when operated at high altitude with the carburetor modifications for high altitude use, will meet each emission standard throughout its useful life.

Even with carburetor modification, engine horsepower will decrease about 3.5% for each 1,000-foot (300-meter) increase in altitude. The effect of altitude on horsepower will be greater than this if no carburetor modification is made.

NOTICE

When the carburetor has been modified for high altitude operation, the air/fuel mixture will be too lean for low altitude use. Operation at altitudes below 5,000 feet (1,500 meters) with a modified carburetor may cause the engine to overheat and result in serious engine damage. For use at low altitudes, have your servicing dealer return the carburetor to original factory specifications.

Engine Oil

Check the oil level BEFORE EACH USE with the generator on a level surface and the engine stopped.

Use 4-stroke motor oil that meets or exceeds the requirements for API service category SJ or later (or equivalent). Always check the API SERVICE label on the oil container to be sure it includes the letters SJ or later (or equivalent).

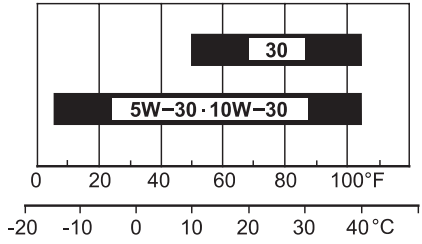

AMBIENT TEMPERATURE

SAE 10W-30 is recommended for general, all-temperature use. Other viscosities shown in the chart may be used when the average temperature in your area is within the indicated range.

1. Remove the oil filler cap/dipstick and wipe the dipstick clean.
2. Check the oil level by inserting the dipstick into the filler neck without screwing it in.
3. If the level is low, fill to the upper limit of the oil filler neck with the recommended oil.

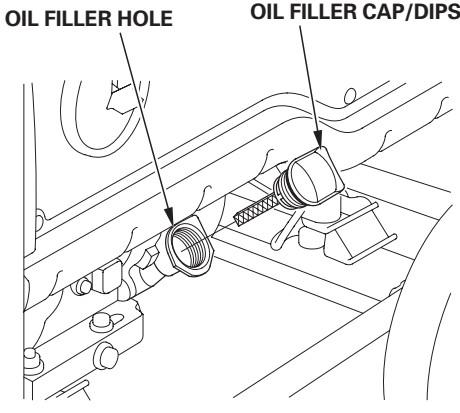

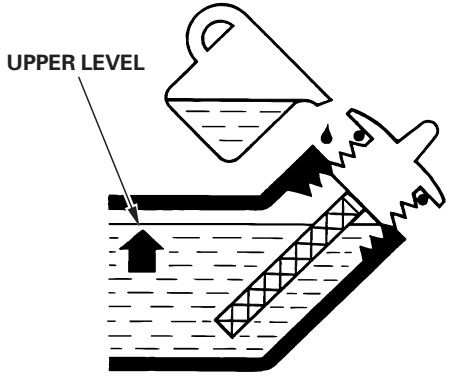

Refueling
With the engine stopped, check the fuel level gauge. Refill the fuel tank if the fuel level is low.

⚠WARNING

Gasoline is highly flammable and explosive.

You can be burned or seriously injured when handling fuel.

- **Stop engine and keep heat, sparks, and flame away.**
- **Refuel only outdoors.**
- **Wipe up spills immediately.**

Refuel in a well-ventilated area with the engine stopped. If the engine has been running, allow it to cool first. Refuel carefully to avoid spilling fuel. Do not fill above the upper limit mark.

Never refuel the engine inside a building where gasoline fumes may reach flames or sparks. Keep gasoline away from appliance pilot lights, barbecues, electric appliances, power tools, etc.

Spilled fuel is not only a fire hazard, it causes environmental damage. Wipe up spills immediately.

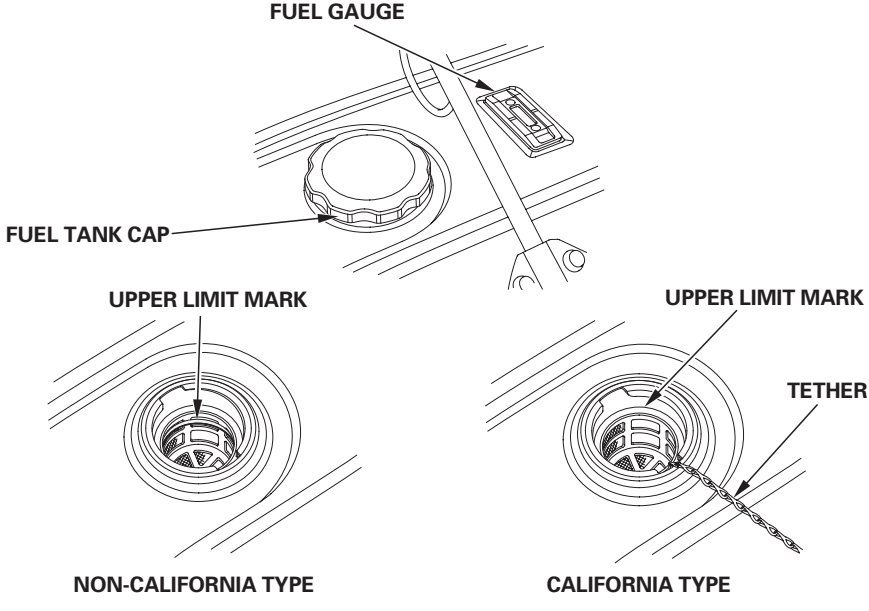

NOTICE

Fuel can damage paint and plastic. Be careful not to spill fuel when filling your fuel tank. Damage caused by spilled fuel is not covered under warranty.

After refueling, reinstall the fuel tank cap securely.

Fuel Recommendations

This engine is certified to operate on regular unleaded gasoline with a pump octane rating of 86 or higher.

Never use stale or contaminated gasoline or an oil/gasoline mixture. Avoid getting dirt or water in the fuel tank.

You may use regular unleaded gasoline containing no more than 10% ethanol (E10) or 5% methanol by volume. In addition, methanol must contain cosolvents and corrosion inhibitors.

Use of fuels with content of ethanol or methanol greater than shown above may cause starting and/or performance problems. It may also damage metal, rubber, and plastic parts of the fuel system.

Engine damage or performance problems that result from using a fuel with percentages of ethanol or methanol greater than shown above are not covered under warranty.

STARTING THE ENGINE/STOPPING THE ENGINE

Starting the Engine

For your safety, do not operate the generator in an enclosed area such as a garage. Your generator's exhaust contains poisonous carbon monoxide gas that can collect rapidly in an enclosed area and cause illness or death.

⚠WARNING

Exhaust contains poisonous carbon monoxide gas that can build up to dangerous levels in closed areas.
Breathing carbon monoxide can cause unconsciousness or death.
Never run the generator in a closed, or even partly closed area where people may be present.

To prevent a possible fire, keep the generator at least 3 feet (1 meter) away from building walls and other equipment during operation. Do not place flammable objects close to the engine.

NOTICE

Operating this generator less than 3 feet (1 meter) from a building or other obstruction can cause overheating and damage the generator. For proper cooling, allow at least 3 feet (1 meter) of empty space above and around the generator.

Refer to *AC Operation* (see page 22) for connecting loads to the generator.

1. Perform the *PRE-OPERATION CHECK* (see page 31).
2. Make sure that the AC circuit breaker is in the OFF position. The generator may be hard to start if a load is connected.
3. Turn the fuel valve lever to the ON position.
4. Pull the choke rod to the CLOSE position.
5. Make sure the Auto Throttle switch is in the OFF position, or more time will be required for warm up.
6. Move the engine switch to the ON position.
7. Pull the starter grip lightly until resistance is felt, then pull briskly.

NOTICE

Do not allow the starter grip to snap back against the engine. Return it gently to prevent damage to the starter.

8. Push the choke rod to the OPEN position as the engine warms up.
9. If you wish to use the Auto Throttle system, turn the Auto Throttle switch to the AUTO position after the engine has warmed up for 2 or 3 minutes.

Stopping the Engine
In an emergency:
To stop the engine in an emergency, move the engine switch to the OFF position.

In normal use:
1. Turn the AC circuit breaker to the OFF position.
2. Move the engine switch to the OFF position.
3. Turn the fuel valve lever to the OFF position.

MAINTENANCE

The Importance of Maintenance

Good maintenance is essential for safe, economical, and trouble free operation. It will also help reduce air pollution.

⚠WARNING

Improper maintenance, or failure to correct a problem before operation, can cause a malfunction in which you can be seriously hurt or killed.

Always follow the inspection and maintenance recommendations and schedules in this owner's manual.

To help you properly care for your generator, the following pages include a maintenance schedule, routine inspection procedures, and simple maintenance procedures using basic hand tools. Other service tasks that are more difficult or require special tools are best handled by professionals and are normally performed by a Honda technician or other qualified mechanic.

The maintenance schedule applies to normal operating conditions. If you operate your generator under severe conditions, such as sustained high-load or high-temperature operation, or use it in unusually wet or dusty conditions, consult your servicing dealer for recommendations applicable to your individual needs and use.

Maintenance, replacement, or repair of the emission control devices and systems may be performed by any engine repair establishment or individual, using parts that are ''certified'' to EPA standards.

Maintenance Safety

Some of the most important safety precautions follow. However, we cannot warn you of every conceivable hazard that can arise in performing maintenance. Only you can decide whether or not you should perform a given task.

⚠WARNING

Failure to properly follow maintenance instructions and precautions can cause you to be seriously hurt or killed.

Always follow the procedures and precautions in the owner's manual.

Safety Precautions

- Make sure the engine is off before you begin any maintenance or repairs. This will eliminate several potential hazards:

  — **Carbon monoxide poisoning from engine exhaust.**
  Operate outside away from open windows or doors.

  — **Burns from hot parts.**
  Let the engine and exhaust system cool before touching.

  — **Injury from moving parts.**
  Do not run the engine unless instructed to do so.

- Read the instructions before you begin, and make sure you have the tools and skills required.

- To reduce the possibility of fire or explosion, be careful when working around gasoline. Use only a non-flammable solvent, not gasoline, to clean parts. Keep cigarettes, sparks, and flames away from all fuel-related parts.

Remember that your servicing dealer knows your generator best and is fully equipped to maintain and repair it.

To ensure the best quality and reliability, use only new, Honda Genuine parts or their equivalents for repair or replacement.

Maintenance Schedule

REGULAR SERVICE PERIOD (3) ITEM Performed at every indicated month or operating hour interval, whichever comes first.		Each use	First month or 20 Hrs.	Every 3 months or 50 Hrs.	Every 6 months or 100 Hrs.	Every year or 300 Hrs.
Engine oil	Check level	○				
	Change		○		○	
Air cleaner	Check	○				
	Clean			○(1)		
GFCI	Check	○				
Canister (California type)	Check	Every 2 years (2)				
Purge tube (California type)	Check	Every 2 years (2)				
Charge tube (California type)	Check	Every 2 years (2)				
Sediment cup	Clean				○	
Spark plug	Check-adjust				○	
	Replace					○
Spark arrester	Clean				○	
Idle speed	Check-adjust					○(2)
Valve clearance	Check-adjust					○(2)
Combustion chamber	Clean	After every 500 Hrs.(2)				
Fuel tank and filter	Clean				○(2)	
Fuel tube	Check	Every 2 years (Replace if necessary)(2)				

(1)Service more frequently when used in dusty areas.
(2)These items should be serviced by an authorized Honda generator dealer, unless the owner has the proper tools and is mechanically proficient. See the Honda Shop Manual.
(3)For commercial use, log hours of operation to determine proper maintenance intervals.

Failure to follow this maintenance schedule could result in non-warrantable failures.

Engine Oil Change

Drain the oil while the engine is warm to assure rapid and complete draining.

1. Place a suitable container below the engine to catch the oil, then remove the oil drain plug and sealing washer, remove the oil filler cap/dipstick, and drain the oil.
2. Reinstall the oil drain plug and a new sealing washer. Tighten the plug securely.
3. Refill with the recommended oil (see page 31) and check the oil level.

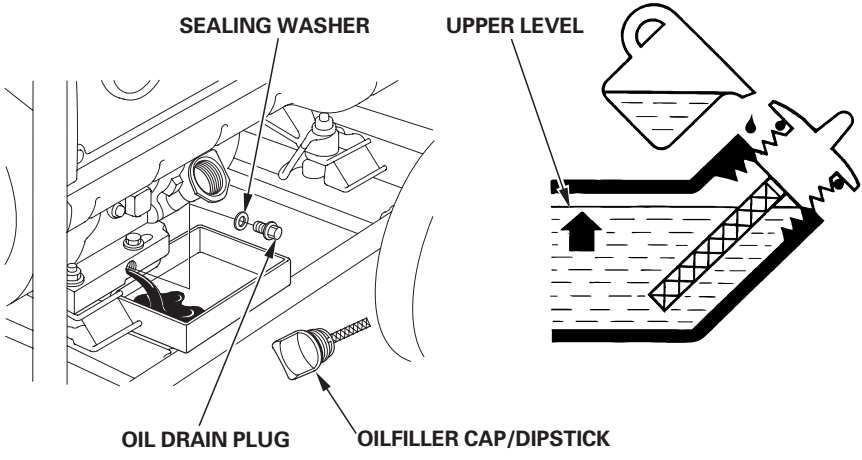

Wash your hands with soap and water after handling used oil.

NOTICE

Improper disposal of engine oil can be harmful to the environment. If you change your own oil, please dispose of it properly. Put it in a sealed container, and take it to a recycling center. Do not discard it in a trash bin, dump it on the ground, or pour it down a drain.

Air Cleaner Service

A dirty air cleaner will restrict air flow to the carburetor. To prevent carburetor malfunction, service the air cleaner regularly. Service more frequently when operating the generator in extremely dusty areas.

NOTICE

Operating the engine without an air filter or with a damaged air filter will allow dirt to enter the engine, causing rapid engine wear. This type of damage is not covered by the Distributor's Limited Warranty.

1. Unsnap the two air cleaner cover clips, remove the air cleaner cover, and remove the element.

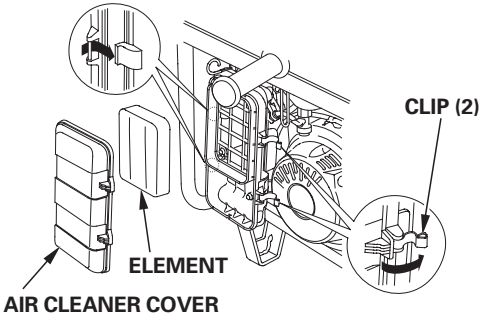

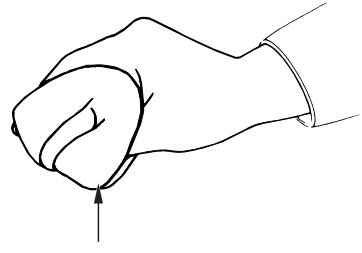

2. Wash the air cleaner element in a solution of household detergent and warm water, then rinse thoroughly, or wash in nonflammable or high flashpoint solvent. Allow the air cleaner element to dry thoroughly.
3. Soak the air cleaner element in clean engine oil and squeeze out the excess oil. The engine will smoke during initial startup if too much oil is left in the air cleaner element.
4. Reinstall the air cleaner element and the cover.

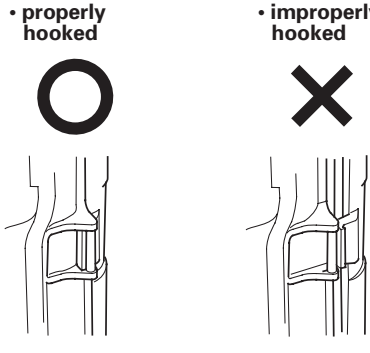

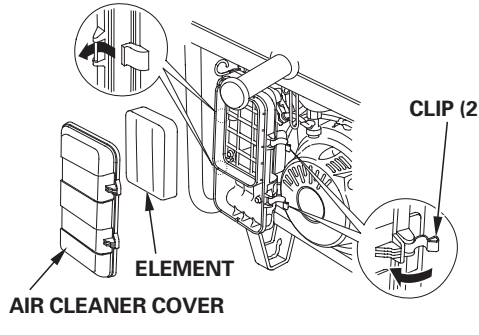

Fuel Sediment Cup Cleaning

The sediment cup prevents dirt or water that may be in the fuel tank from entering the carburetor. If the engine has not been run for a long time, the sediment cup should be cleaned.

1. Turn the fuel valve lever to the OFF position. Remove the sediment cup, O-ring, and filter.
2. Clean the sediment cup and filter in nonflammable or high flash point solvent.
3. Reinstall the filter, new O-ring, and sediment cup.
4. Turn the fuel valve lever ON and check for leaks.

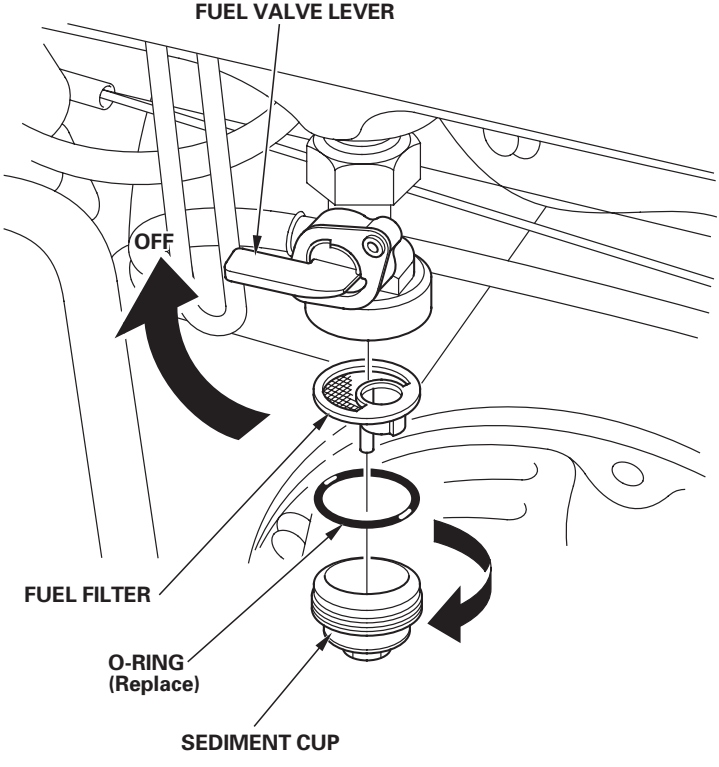

Spark Plug Service
In order to service the spark plug, you will need a spark plug wrench (commercially available).

Recommended spark plugs: BPR5ES (NGK), W16EPR-U (DENSO)

To ensure proper engine operation, the spark plug must be properly gapped and free of deposits.

NOTICE

An incorrect spark plug can cause engine damage.

If the engine has been running, let it to cool before servicing the spark plug.

1. Remove the spark plug cap.
2. Clean any dirt from around the spark plug base.
3. Use a spark plug wrench to remove the spark plug.

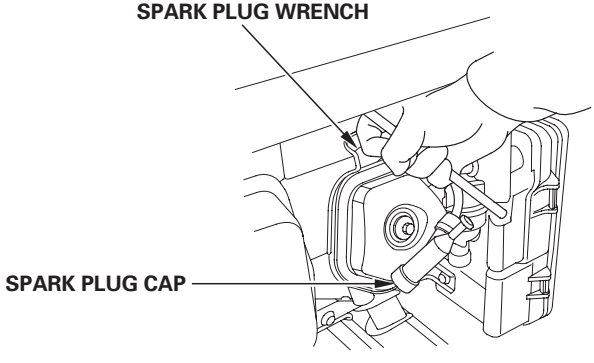

4. Visually inspect the spark plug. Discard it if the insulator is cracked, chipped, or fouled.
5. Measure the spark plug electrode gap with a wire-type feeler gauge. Correct the gap, if necessary, by carefully bending the side electrode.
   The gap should be:
   0.028–0.031 in (0.7–0.8 mm)

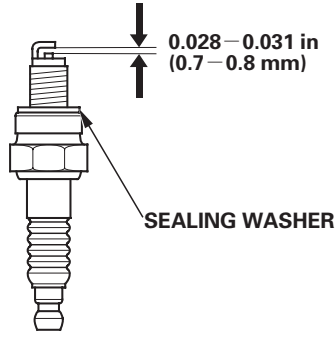

6. Check that the spark plug sealing washer is in good condition, and thread the spark plug in by hand to prevent cross-threading.
7. After the spark plug is seated, tighten with a spark plug wrench to compress the washer.

   — If installing a new spark plug, tighten 1/2 turn after the spark plug seats to compress the washer. If reinstalling a used spark plug, tighten 1/8 — 1/4 turn after the spark plug seats to compress the washer.

NOTICE

A loose spark plug can overheat and damage the engine.
Overtightening the spark plug can damage the threads in the cylinder head.

Spark Arrester Maintenance

If the generator has been running, the muffler will be very hot. Allow it to cool before proceeding.

NOTICE

The spark arrester must be serviced every 100 hours to maintain its efficiency.

Clean the spark arrester as follows:

1. Loosen the screw by the exhaust port of the muffler and remove the spark arrester.
2. Use a brush to remove carbon deposits from the spark arrester screen.
   Inspect the screen for breaks or tears and replace it if necessary.
3. Install the spark arrester in the reverse order of removal.

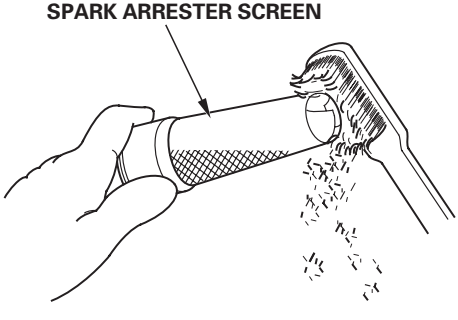

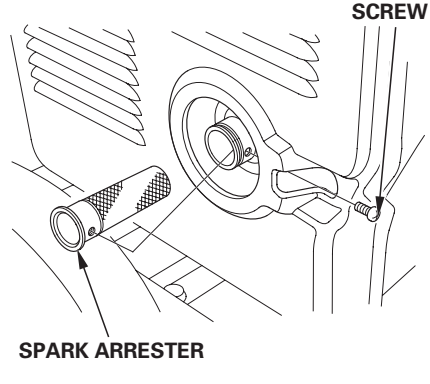

STORAGE

Storage Preparation

Proper storage preparation is essential for keeping your generator trouble-free and looking good. The following steps will help to keep rust and corrosion from impairing your generator's function and appearance, and will make the engine easier to start when you use the generator again.

Cleaning

Wipe the generator with a moist cloth. After the generator has dried, touch up any damaged paint, and coat other areas that may rust with a light film of oil.

Fuel

NOTICE

Depending on the region where you operate your equipment, fuel formulations may deteriorate and oxidize rapidly. Fuel deterioration and oxidation can occur in as little as 30 days and may cause damage to the carburetor and/or fuel system. Please check with your servicing dealer for local storage recommendations.

Gasoline will oxidize and deteriorate in storage. Old gasoline will cause hard starting, and it leaves gum deposits that clog the fuel system. If the gasoline in your generator deteriorates during storage, you may need to have the carburetor and other fuel system components serviced or replaced.
The length of time that gasoline can be left in your fuel tank and carburetor without causing functional problems will vary with such factors as gasoline blend, your storage temperatures, and whether the fuel tank is partially or completely filled. The air in a partially filled fuel tank promotes fuel deterioration. Very warm storage temperatures accelerate fuel deterioration. Fuel deterioration problems may occur within a few months, or even less if the gasoline was not fresh when you filled the fuel tank.

The *Distributor's Limited Warranty* does not cover fuel system damage or engine performance problems resulting from neglected storage preparation.
You can extend fuel storage life by adding a gasoline stabilizer that is formulated for that purpose, or you can avoid fuel deterioration problems by draining the carburetor, sediment cup (if applicable) and/or fuel tank.

Service according to the table below:

STORAGE TIME	RECOMMENDED SERVICE PROCEDURE TO PREVENT HARD STARTING
Less than 1 month	No preparation required
1 to 2 months	Fill with fresh gasoline and add gasoline stabilizer *.
2 months to 1 year	Fill with fresh gasoline and add gasoline stabilizer *. Drain the carburetor float bowl (page 46). Drain the fuel sediment cup (page 41).
1 year or more	Fill with fresh gasoline and add gasoline stabilizer *. Drain the carburetor float bowl (page 46). Drain the fuel sediment cup (page 41). Remove the spark plug. Put a teaspoon of engine oil into the cylinder. Turn the engine slowly with the pull rope to distribute the oil. Reinstall the spark plug. Change the engine oil (page 39). After removal from storage, drain the stored gasoline into a suitable container, and fill with fresh gasoline before starting.
*Use gasoline stabilizers that are formulated to extend storage life. Follow the manufacturer's instructions for use. Contact your authorized Honda generator dealer for stabilizer recommendations.	

Draining the Fuel Tank and Carburetor

⚠WARNING

Gasoline is highly flammable and explosive.

You can be burned or seriously injured when handling fuel.

- **Stop the engine and keep heat, sparks, and flame away.**
- **Handle fuel only outdoors.**
- **Wipe up spills immediately.**

1. Drain the carburetor by loosening the drain screw. Drain the gasoline into a suitable container.

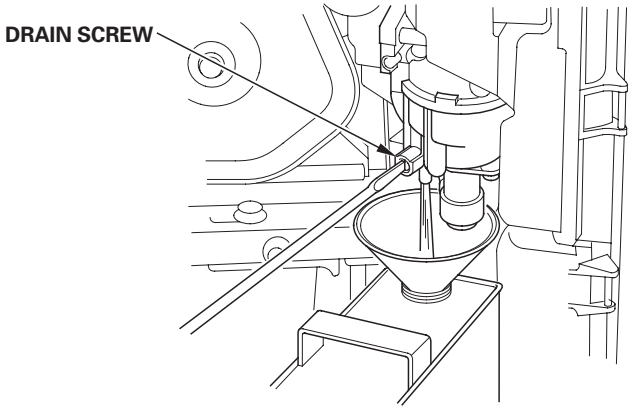

2. Place a suitable gasoline container below the sediment cup, and use a funnel to avoid spilling gasoline.

3. Remove the sediment cup (see page 41), and then turn the fuel valve lever to the ON position.

4. Allow the gasoline to drain completely, and then install the sediment cup (see page 41).

Engine Oil

1. Change the engine oil (see page 39).

2. Remove the spark plug (see page 42).

3. Pour a teaspoon (5 — 10 cc) of clean engine oil into the cylinder.

4. Pull the starter grip several times to distribute the oil in the cylinder.

5. Reinstall the spark plug.

6. Slowly pull the starter grip until resistance is felt. At this point, the piston is coming up on its compression stroke and both the intake and exhaust valves are closed. Storing the engine in this position will help to protect it from internal corrosion. Return the starter grip gently.

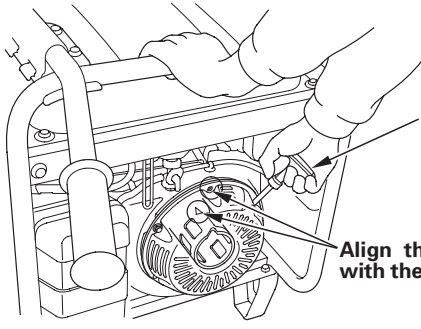

Storage Precautions

If your generator will be stored with gasoline in the fuel tank and carburetor, it is important to reduce the hazard of gasoline vapor ignition.

Select a well ventilated storage area away from any appliance that operates with a flame, such as a furnace, water heater, or clothes dryer. Also avoid any area with a spark-producing electric motor, or where power tools are operated.

If possible, avoid storage areas with high humidity, because that promotes rust and corrosion.

Unless all fuel has been drained from the fuel tank, leave the fuel valve in the OFF position to reduce the possibility of leakage.

Place the generator on a level surface. Tilting can cause fuel or oil leakage.

With the engine and exhaust system cool, cover the generator to keep out dust. A hot engine and exhaust system can ignite or melt some materials.

Do not use sheet plastic as a dust cover. A nonporous cover will trap moisture around the generator, promoting rust and corrosion.

Removal From Storage

Check your generator as described in the *PRE-OPERATION CHECK* chapter of this manual (see page 31).

If the fuel was drained during storage preparation, fill the tank with fresh gasoline. If you keep a container of gasoline for refueling, be sure that it contains only fresh gasoline. Gasoline oxidizes and deteriorates over time, causing hard starting.

If the cylinder was coated with oil during storage preparation, the engine may smoke briefly at startup. This is normal.

When transporting the generator, turn the engine switch and the fuel valve OFF. Keep the generator level to prevent fuel spillage. Fuel vapor or spilled fuel may ignite.

⚠WARNING

Contact with a hot engine or exhaust system can cause serious burns or fires. Let the engine cool before transporting or storing the generator.

Take care not to drop or strike the generator when transporting. Do not place heavy objects on the generator.

When transporting the generator by loading it on to a vehicle, secure to the generator frame as shown.

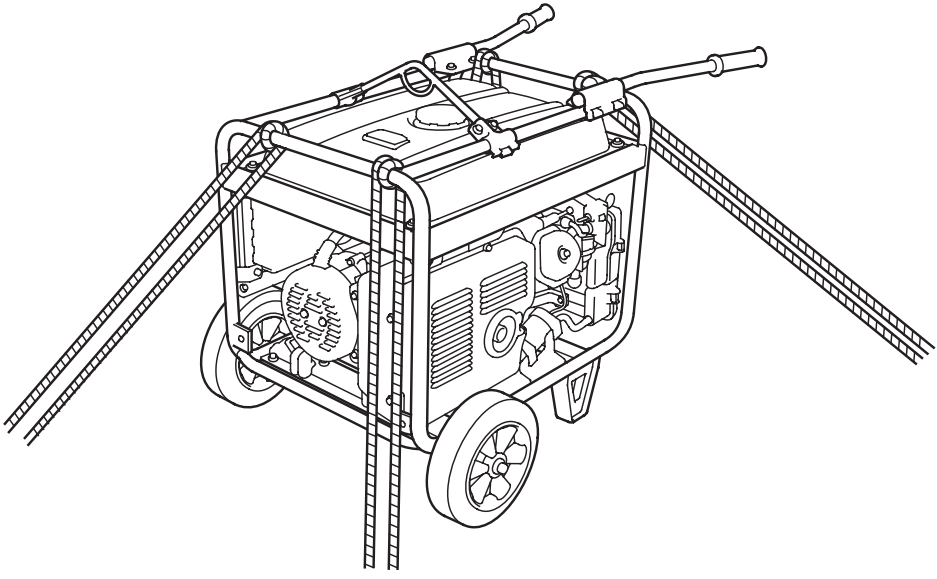

TROUBLESHOOTING

When the engine will not start:

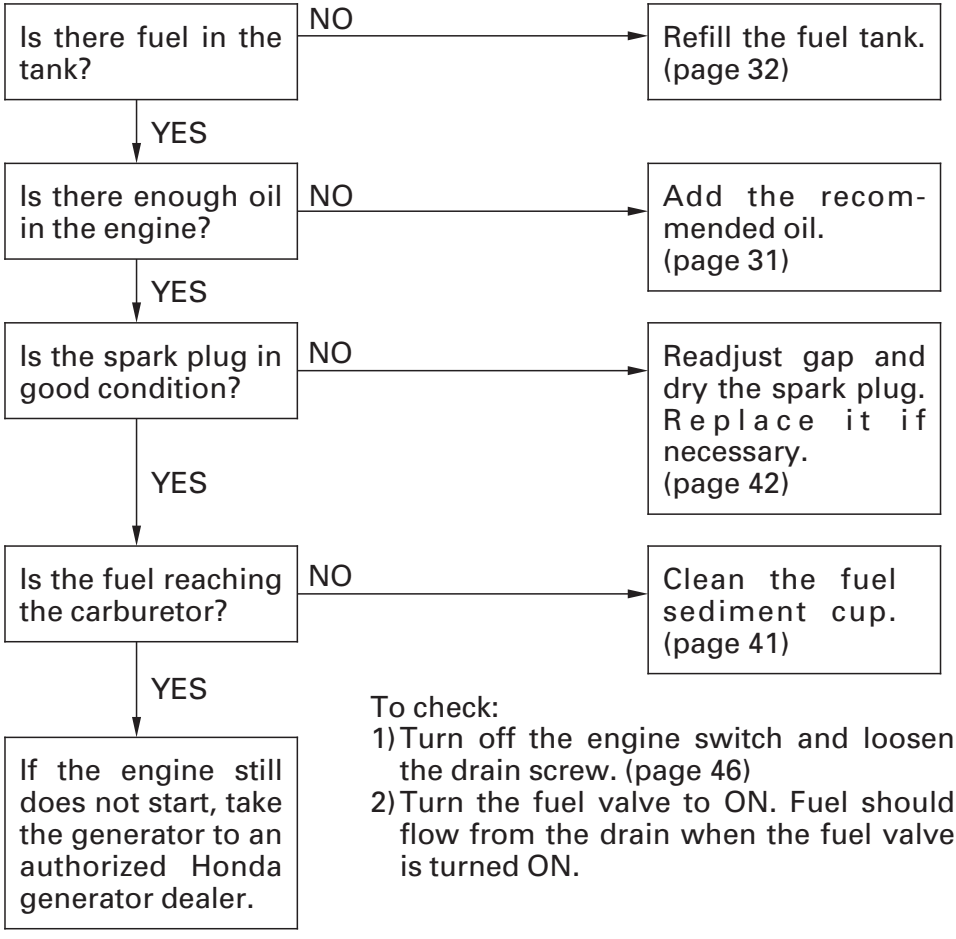

To check:

1) Turn off the engine switch and loosen the drain screw. (page 46)
2) Turn the fuel valve to ON. Fuel should flow from the drain when the fuel valve is turned ON.

No electricity at the AC receptacles:

〈When the GFCI RESET button is extended〉

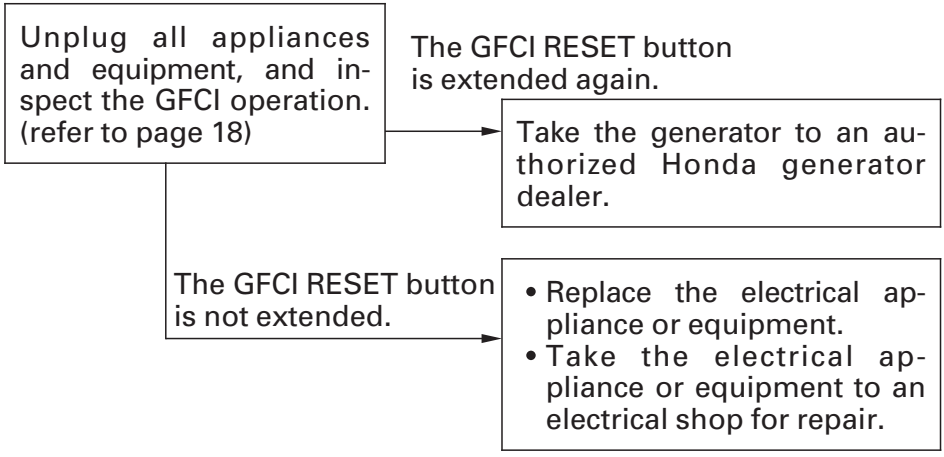

〈When the GFCI RESET button is not extended〉

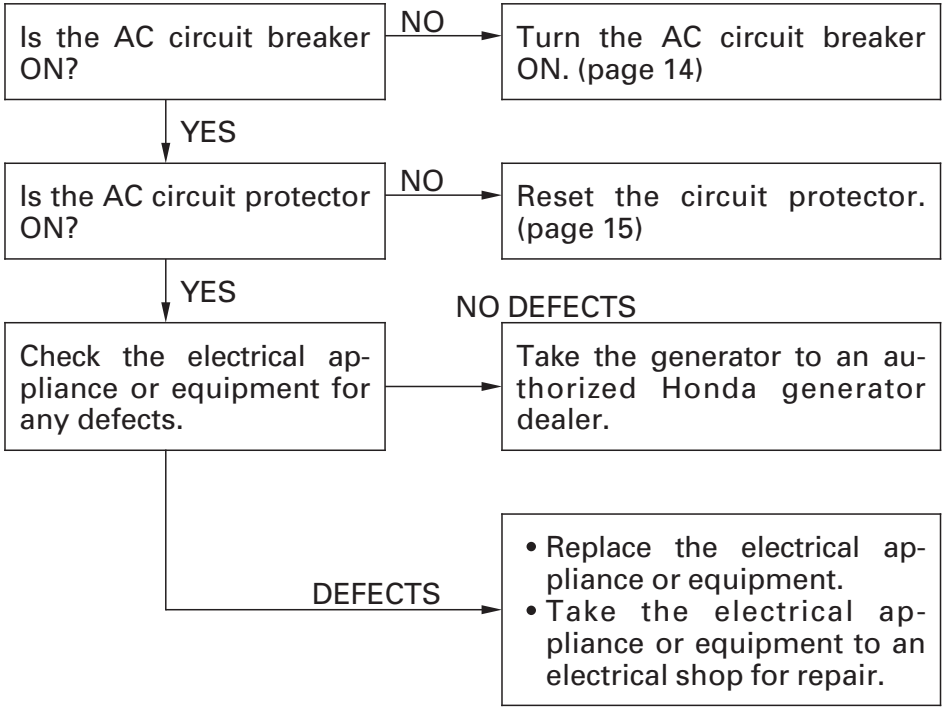

Emission Control System Information

Source of Emissions

The combustion process produces carbon monoxide, oxides of nitrogen, and hydrocarbons. Control of hydrocarbons and oxides of nitrogen are very important because, under certain conditions, they react to form photochemical smog when subjected to sunlight. Carbon monoxide does not react in the same way, but it is toxic.

Honda utilizes appropriate air/fuel ratios and other emissions control systems to reduce the emissions of carbon monoxide, oxides of nitrogen, and hydrocarbons.
Additionally, Honda fuel systems utilize components and control technologies to reduce evaporative emissions.

The U.S. and California Clean Air Acts

EPA and California regulations require all manufacturers to furnish written instructions describing the operation and maintenance of emission control systems.

The following instructions and procedures must be followed in order to keep the emissions from your Honda engine within the emission standards.

Tampering and Altering

Tampering with or altering the emission control system may increase emissions beyond the legal limit. Among those acts that constitute tampering are:

- Removal or alteration of any part of the intake, fuel, or exhaust systems.

- Altering or defeating the governor linkage or speed-adjusting mechanism to cause the engine to operate outside its design parameters.

Problems That May Affect Emissions

If you are aware of any of the following symptoms, have your engine inspected and repaired by your servicing dealer.

- Hard starting or stalling after starting.
- Rough idle.
- Misfiring or backfiring under load.
- Afterburning (backfiring).
- Black exhaust smoke or high fuel consumption.

Replacement Parts

The emission control systems on your Honda engine were designed, built, and certified to conform with applicable emission regulations. We recommend the use of Honda Genuine parts whenever you have maintenance done. These original-design replacement parts are manufactured to the same standards as the original parts, so you can be confident of their performance. The use of replacement parts that are not of the original design and quality may impair the effectiveness of your emission control system.

A manufacturer of an aftermarket part assumes the responsibility that the part will not adversely affect emission performance. The manufacturer or rebuilder of the part must certify that use of the part will not result in a failure of the engine to comply with emission regulations.

Maintenance

Follow the *Maintenance Schedule* on page 38. Remember that this schedule is based on the assumption that your machine will be used for its designed purpose. Sustained high-load or high-temperature operation, or use in unusually wet or dusty conditions, will require more frequent service.

Air Index
(Models certified for sale in California)

An Air Index Information label is applied to engines certified to an emission durability time period in accordance with the requirements of the California Air Resources Board.

The bar graph is intended to provide you, our customer, the ability to compare the emissions performance of available engines. The lower the Air Index, the less pollution.

The durability description is intended to provide you with information relating to the engine's emission durability period. The descriptive term indicates the useful life period for the engine's emission control system. See your *Emission Control System Warranty* for additional information.

Descriptive Term	Applicable to Emission Durability Period
Moderate	50 hours (0—80 cc, inclusive) 125 hours (greater than 80 cc)
Intermediate	125 hours (0—80 cc, inclusive) 250 hours (greater than 80 cc)
Extended	300 hours (0—80 cc, inclusive) 500 hours (greater than 80 cc) 1,000 hours (225 cc and greater)

EB3800X

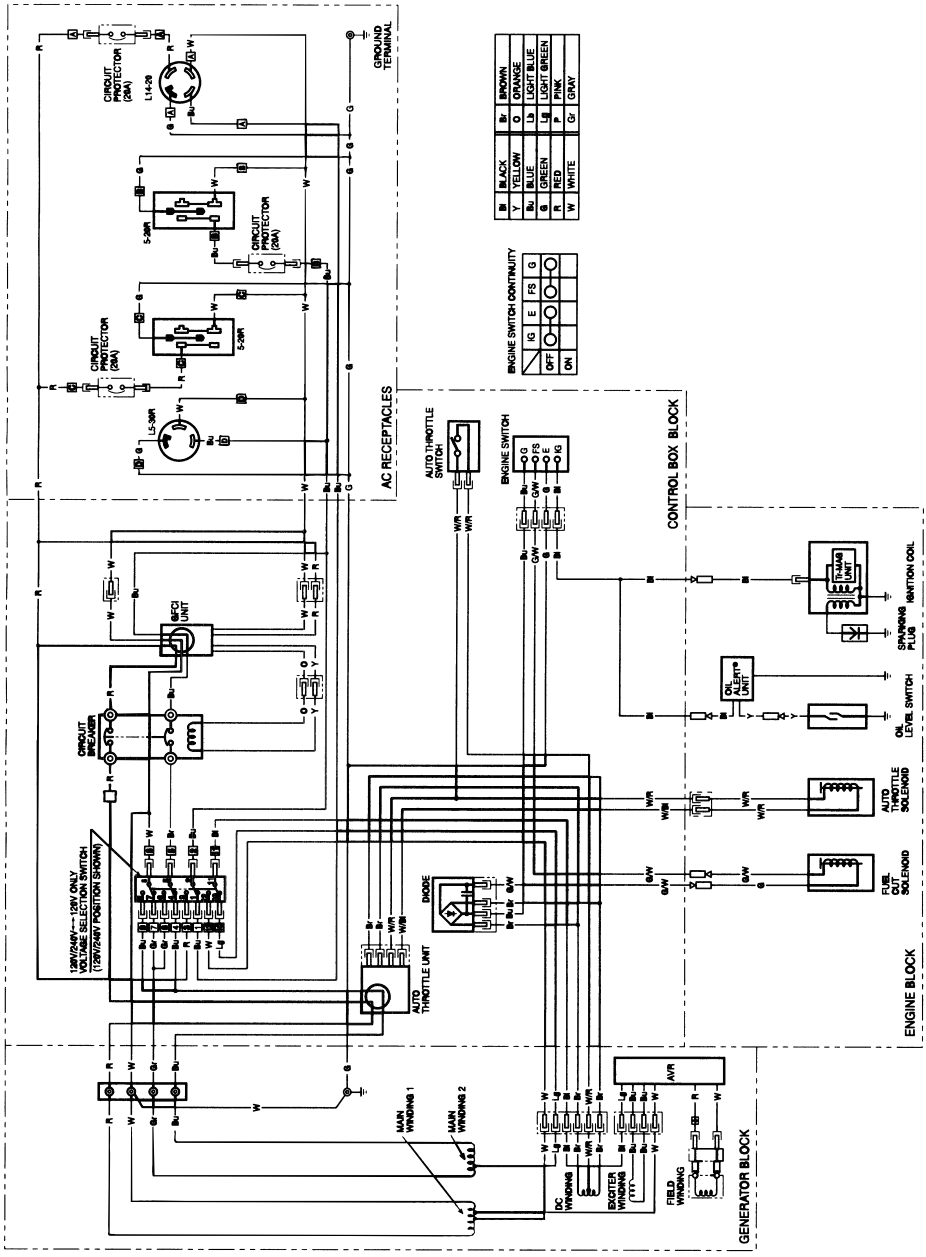
CIRCUIT PROTECTOR (20A)
L14-20
GROUND TERMINAL
5-30R
CIRCUIT PROTECTOR (20A)
CIRCUIT PROTECTOR (20A)
5-30R
L5-30R
AC RECEPTACLES
AUTO THROTTLE SWITCH
ENGINE SWITCH
CONTROL BOX BLOCK
GFCI UNIT
CIRCUIT BREAKER
120V/240V~ 120V ONLY VOLTAGE SELECTION SWITCH (120V/240V POSITION SHOWN)
DIODE
AUTO THROTTLE UNIT
TRIAC UNIT
IGNITION COIL
SPARKING PLUG
OIL ALERT® UNIT
OIL LEVEL SWITCH
AUTO THROTTLE SOLENOID
FUEL CUT-OFF SOLENOID
ENGINE BLOCK
AVR
MAIN WINDING 1
MAIN WINDING 2
DC WINDING
EXCITER WINDING
FIELD WINDING
GENERATOR BLOCK
ENGINE SWITCH CONTINUITY
IG
E
FS
G
OFF
ON
Br BROWN
O ORANGE
Lb LIGHT BLUE
Lg LIGHT GREEN
P PINK
Gr GRAY
Bl BLACK
Y YELLOW
Bu BLUE
G GREEN
R RED
W WHITE

EB5000X, EB6500X

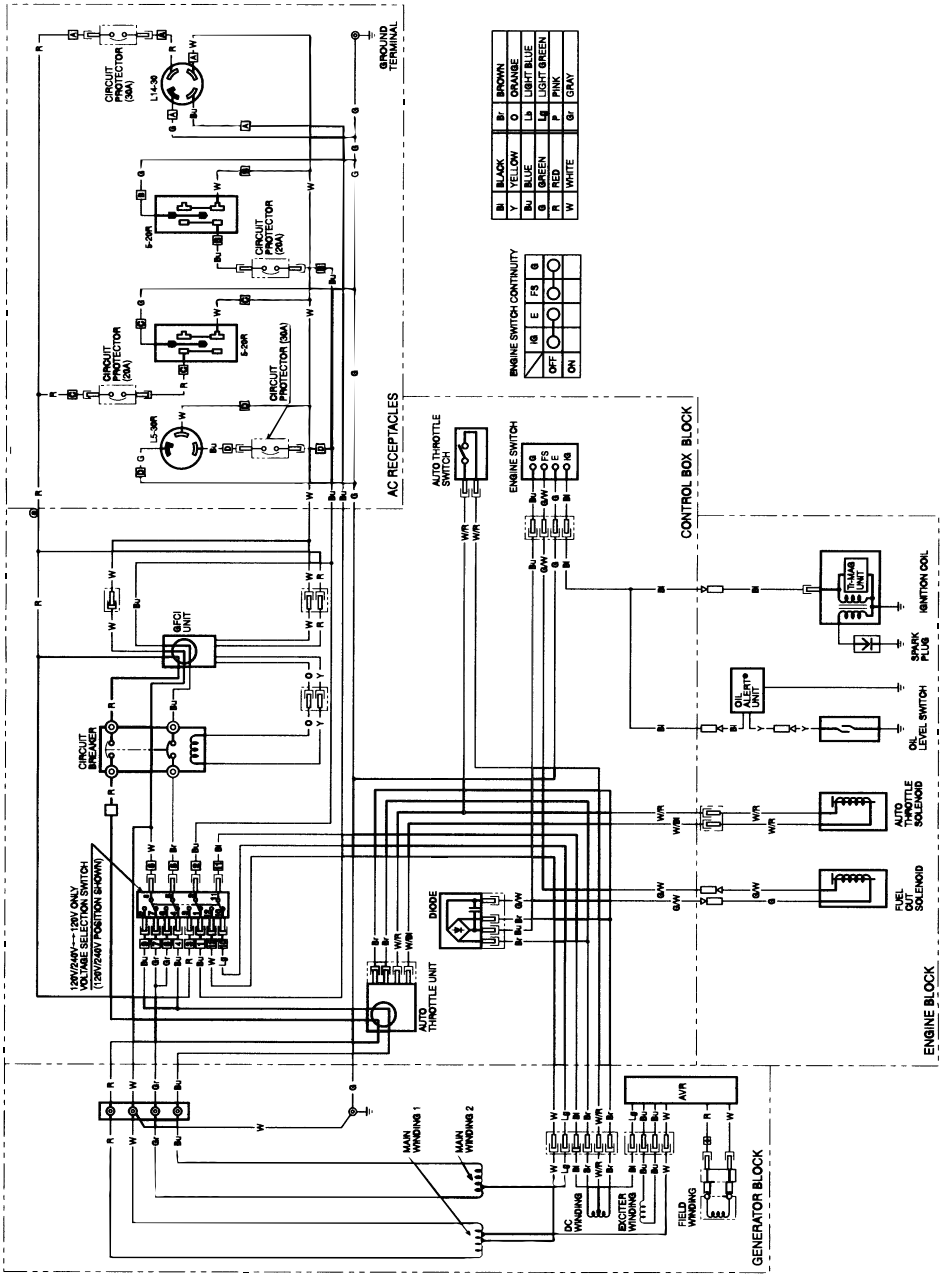

Dimensions

Model	EB3800X	
Type	California type (AC type)	Non-California type (AN type)
Description code	EAJC	
Length	40.9 in (1,040 mm)	
Width	27.2 in (691 mm)	
Height	30.4 in (773 mm)	
Dry mass [weight]	186.3 lbs (84.5 kg)	185 lbs (84 kg)

Engine

Model	GX240	
Type	California type (AC type)	Non-California type (AN type)
Engine type	4-stroke, overhead valve, single cylinder	
Displacement [Bore × Stroke]	14.8 cu-in (242 cm^3) [2.9 × 2.3 in (73.0 × 58.0 mm)]	
Compression ratio	8.2 : 1	
Engine speed	3,600 rpm	
Cooling system	Forced air cooling	
Ignition system	Transistorized magneto	
Oil capacity	1.2 US qt (1.1 L)	
Fuel tank capacity	6.21 US gal (23.5 L)	
Spark plug	BPR5ES (NGK) , W16EPR-U (DENSO)	

Generator

Model		EB3800X
AC output	Rated voltage	120/240 V
	Rated frequency	60 Hz
	Rated current	27.5/13.8 A
	Rated output	3.3 kVA
	Maximum output	3.8 kVA

Tuneup Specifications

ITEM	SPECIFICATION	MAINTENANCE
Spark plug gap	0.028－0.031 in (0.7－0.8 mm)	Refer to page 42
Valve clearance	IN: 0.15 ± 0.02 mm (cold) EX: 0.20 ± 0.02 mm (cold)	See your authorized Honda dealer.
Other specifications	No other adjustments needed.	

Specifications may vary according to the types, and are subject to change without notice.

Dimensions

Model	EB5000X	
Type	California type (AC, ACH type)	Non-California type (AN, ANH type)
Description code	EAKC	
Length	41.3 in (1,049 mm)	
Width	27.2 in (691 mm)	
Height	30.4 in (773 mm)	
Dry mass [weight]	215.6 lbs (97.8 kg)	214.5 lbs (97.3 kg)

Engine

Model	GX340	
Type	California type (AC, ACH type)	Non-California type (AN, ANH type)
Engine type	4-stroke, overhead valve, single cylinder	
Displacement [Bore × Stroke]	20.6 cu-in (337 cm^3) [3.2 × 2.5 in (82.0 × 64.0 mm)]	
Compression ratio	8.0 : 1	
Engine speed	3,600 rpm	
Cooling system	Forced air cooling	
Ignition system	Transistorized magneto	
Oil capacity	1.2 US qt (1.1 L)	
Fuel tank capacity	6.21 US gal (23.5 L)	
Spark plug	BPR5ES (NGK) , W16EPR-U (DENSO)	

Generator

Model		EB5000X
AC output	Rated voltage	120/240 V
	Rated frequency	60 Hz
	Rated current	37.5/18.8 A
	Rated output	4.5 kVA
	Maximum output	5.0 kVA

Tuneup Specifications

ITEM	SPECIFICATION	MAINTENANCE
Spark plug gap	0.028－0.031 in (0.7－0.8 mm)	Refer to page 42
Valve clearance	IN: 0.15 ± 0.02 mm (cold) EX: 0.20 ± 0.02 mm (cold)	See your authorized Honda dealer.
Other specifications	No other adjustments needed.	

Specifications may vary according to the types, and are subject to change without notice.

Dimensions

Model	EB6500X	
Type	California type (AC, ACH type)	Non-California type (AN, ANH type)
Description code	EALC	
Length	41.9 in (1,064 mm)	
Width	27.2 in (691 mm)	
Height	30.4 in (773 mm)	
Dry mass [weight]	220.7 lbs (100.1 kg)	219.6 lbs (99.6 kg)

Engine

Model	GX390	
Type	California type (AC, ACH type)	Non-California type (AN, ANH type)
Engine type	4-stroke, overhead valve, single cylinder	
Displacement [Bore × Stroke]	23.7 cu-in (389 cm^3) [3.5 × 2.5 in (88.0 × 64.0 mm)]	
Compression ratio	8.0 : 1	
Engine speed	3,600 rpm	
Cooling system	Forced air cooling	
Ignition system	Transistorized magneto	
Oil capacity	1.2 US qt (1.1 L)	
Fuel tank capacity	6.21 US gal (23.5 L)	
Spark plug	BPR5ES (NGK) , W16EPR-U (DENSO)	

Generator

Model		EB6500X
AC output	Rated voltage	120/240 V
	Rated frequency	60 Hz
	Rated current	45.8/22.9 A
	Rated output	5.5 kVA
	Maximum output	6.5 kVA

Tuneup Specifications

ITEM	SPECIFICATION	MAINTENANCE
Spark plug gap	0.028－0.031 in (0.7－0.8 mm)	Refer to page 42
Valve clearance	IN: 0.15 ± 0.02 mm (cold) EX: 0.20 ± 0.02 mm (cold)	See your authorized Honda dealer.
Other specifications	No other adjustments needed.	

Specifications may vary according to the types, and are subject to change without notice.

ASSEMBLY

The Importance of Proper Assembly

Proper assembly is essential to operator safety and the reliability of the machine. Any error or oversight made by the person assembling and servicing a unit can easily result in faulty operation, damage to the machine, or injury to the operator.

⚠WARNING

Improper assembly can cause an unsafe condition that can lead to serious injury or death.

Follow the procedures and precautions in the assembly instructions carefully.

Some of the most important safety precautions are given below. However, we cannot warn you of every conceivable hazard that can arise in performing this assembly. Only you can decide whether or not you should perform a given task.

⚠WARNING

Failure to properly follow instructions and precautions can cause you to be seriously hurt or killed.

Follow the procedures and precautions in this manual carefully.

Important Safety Precautions

- Make sure you have a clear understanding of all basic shop safety practices and that you are wearing appropriate clothing and safety equipment. When performing this assembly, be especially careful of the following:

  ☐ Read the instructions before you begin, and be sure you have the tools and skills required to perform the tasks safely.

- Make sure the engine is off before you begin any maintenance or repairs. This will help eliminate several potential hazards:

  ☐ **Carbon monoxide poisoning from engine exhaust.**
  Operate outside away from open windows or doors.

  ☐ **Burns from hot parts.**
  Let the engine and exhaust system cool before touching.

  ☐ **Injury from moving parts.**
  Do not run the engine unless the instruction tells you to do so. Even then, keep your hands, fingers, and clothing away. Do not run the engine when any protective guard or shield is removed.

- To reduce the possibility of a fire or explosion, be careful when working around gasoline or batteries. Use only a non-flammable solvent, not gasoline, to clean parts. Keep all cigarettes, sparks, and flames away from all fuel-related parts.

Unpacking

1. Remove the generator and loose parts box from the carton.

2. Compare the loose parts with the inventory list below.

Tools Required: 12 mm wrench (2), pliers

Loose Parts (Wheel kit, hanger and handle)

Check all loose parts against the following list. Contact your dealer if any of the loose parts shown below are not included with your generator.

Ref. No.	Description	Qty.
1	Wheel	2
2	Axle	1
3	Left upper handle assy	1
4	Right upper handle assy	1
5	Left handle bracket	1
6	Right handle bracket	1
7	Stand	2
8	Hanger	1
9	Hanger bracket	2
10	8×16 mm Flange bolt	16
11	20 mm Washer	2
12	4.0×28 mm Cotter pin	2
13	8 mm Flange nut	4

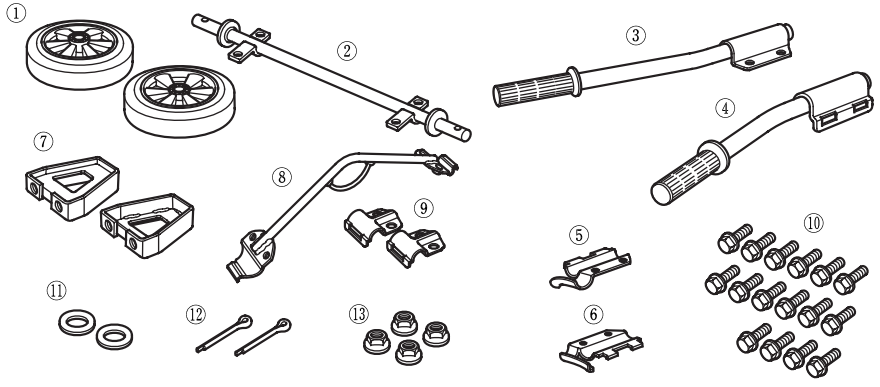

Hanger Kit Installation

1. Position the hanger at the generator's balance point as shown below.

2. Fit the end tabs of the hanger through the bracket slots, and bolt the brackets to the hanger and tighten securely.

TORQUE: 17 — 22 lbf·ft (24 — 29 N·m , 2.4 — 3.0 kgf·m)

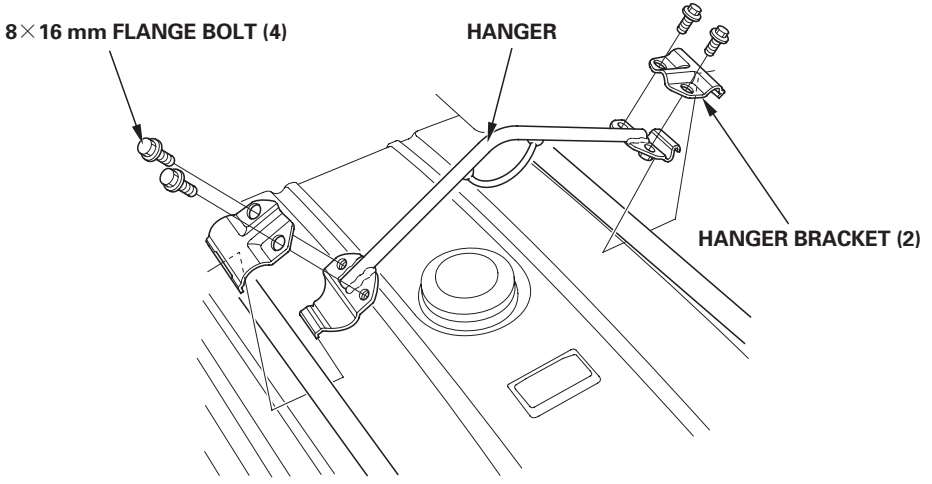

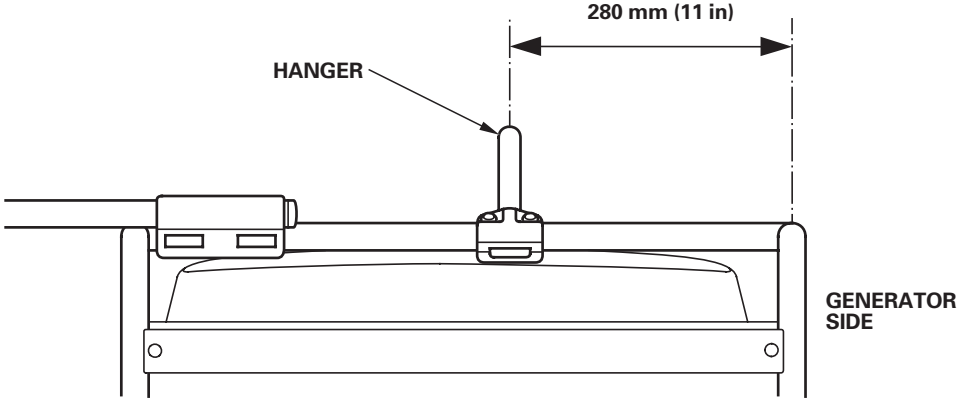

Handle Installation

Install the right and left handles on the generator upper frame using the brackets and 6 flange bolts.

TORQUE: 17 — 22 lbf·ft (24 — 29 N·m , 2.4 — 3.0 kgf·m)

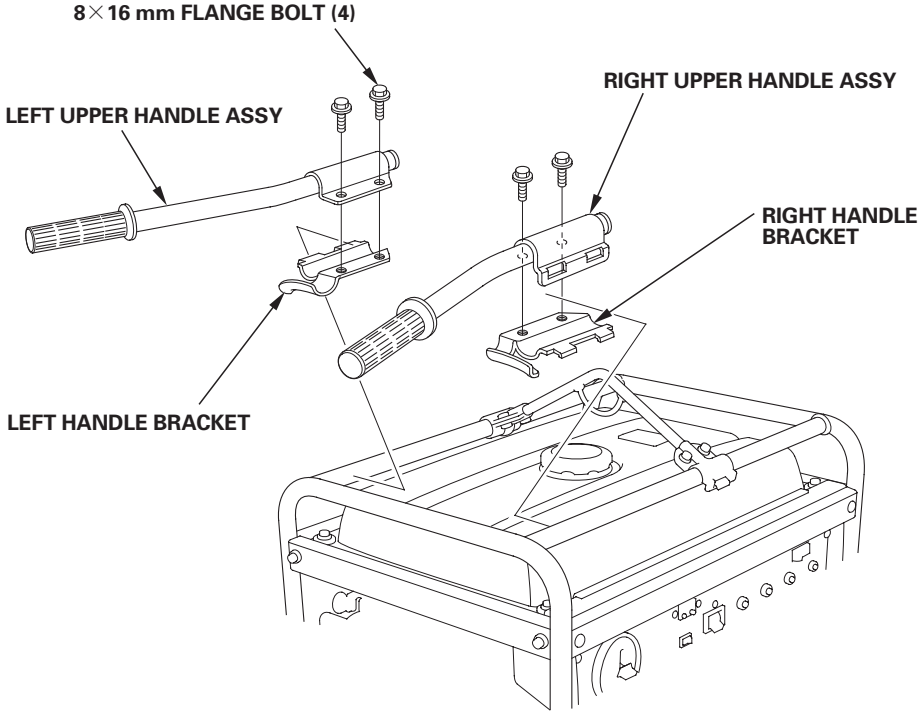

Wheel Kit Installation

1. Apply grease to the axle shaft as shown below, and install the two wheels on the axle shaft using the washers and split pins.

2. Install the axle assembly on the generator using four 8 × 16 mm flange bolts and 8 mm flange nuts.

3. Install the two stands on the under frame using four 8 × 16 mm flange bolts.

TORQUE: 17 — 22 lbf·ft (24 — 29 N·m , 2.4 — 3.0 kgf·m)

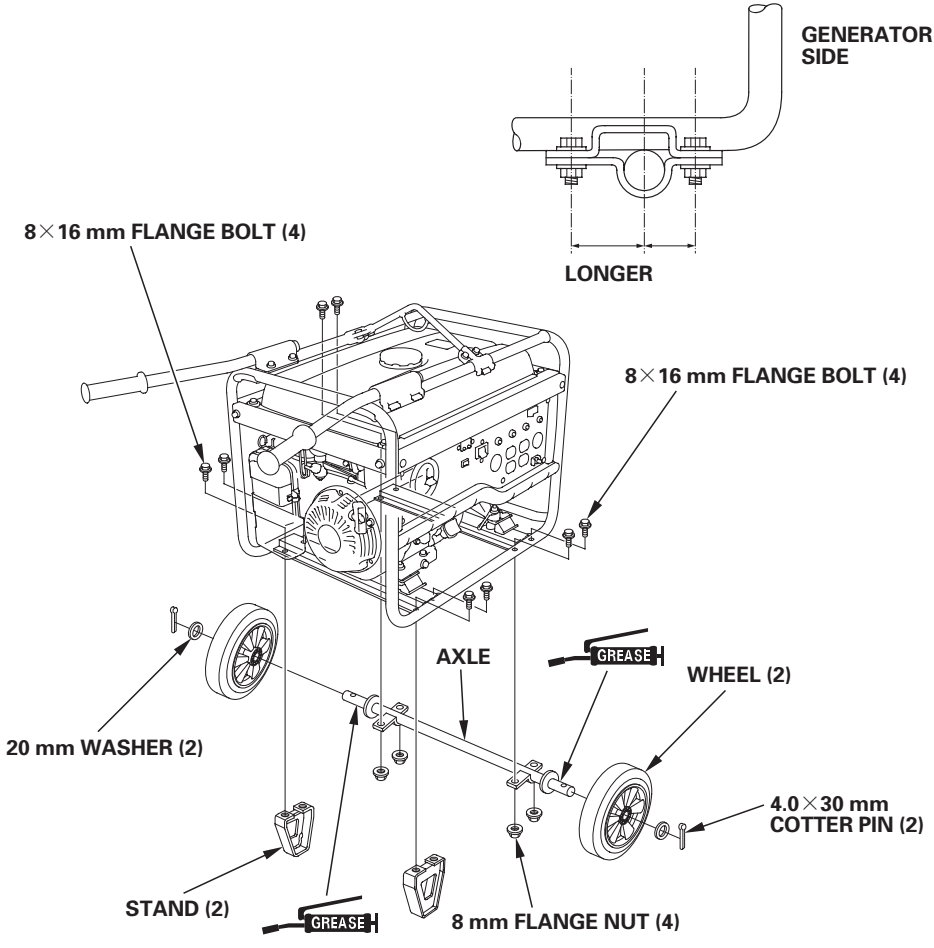

Engine Oil

The generator is shipped **WITHOUT OIL** in the engine.

Place the generator on a level surface. Add enough of the recommended oil to bring the oil level to the top of the oil filler neck.

Use a 4-stroke motor oil that meets the requirements for API service category SJ or later (or equivalent).

SAE 10W-30 is recommended for general, all-temperature use. Other viscosities in the chart may be used when the temperature in your area is within the indicated range.

Do not overfill the engine with oil. If the engine is overfilled, the excess oil may get transferred to the air cleaner housing and air filter.

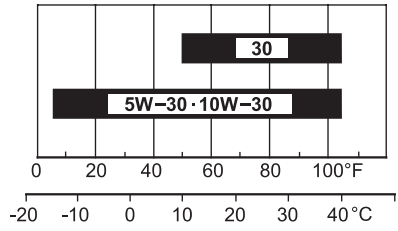

AMBIENT TEMPERATURE

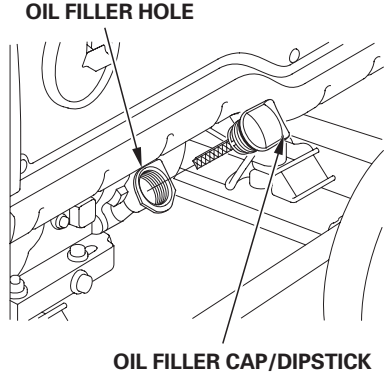

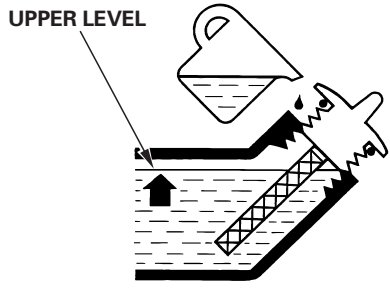

Fuel

Refer to page 32 .

BEFORE OPERATION

Before using your generator, you should become familiar with information contained in the following chapters and sections:

- **GENERATOR SAFETY** (page 5)
- **CONTROLS** (page 10)
- **GENERATOR USE** (page 20)
- **STARTING THE ENGINE** (page 34)
- **STOPPING THE ENGINE** (page 35)

WARRANTY SERVICE INFORMATION

DEALER LOCATOR INFORMATION

To find an authorized Honda Servicing Dealer anywhere in the United States:

visit our web site:
www.hondapowerequipment.com/dealerlocator/

CUSTOMER SERVICE INFORMATION

Servicing dealership personnel are trained professionals. They should be able to answer most questions you may have. If you encounter a problem that your dealer does not solve to your satisfaction, please discuss it with the dealership's management. The Service Manager or General Manager can help. Almost all problems are solved in this way.

If you are dissatisfied with the decision made by the dealership's management, contact the Honda Power Equipment Customer Relations Office. You can write to:

American Honda Motor Co., Inc.
Power Equipment Division
Customer Relations Office
4900 Marconi Drive
Alpharetta, Georgia 30005-8847

Or telephone: (770) 497-6400 8:30 am to 7:00 pm ET

When you write or call, please give us this information:

- Model and serial number (see pages 8 and 9)
- Name of dealer who sold the generator to you
- Name and address of dealer who services your generator
- Date of purchase
- Your name, address, and telephone number
- A detailed description of the problem

Honda PUBLICATIONS

Shop Manual

This manual covers complete maintenance and overhaul procedures. It is intended to be used by a skilled technician.
Available through your Honda dealer or through Helm Inc. at 1 888-292-5395 or visit www.hondapowerequipment.com

Parts Catalog

This manual provides complete, illustrated parts lists. Available through your Honda dealer.

Accessories Catalog

Your authorized Honda power equipment dealer offers a wide selection of accessories (optional equipment) to make your generator even more useful.
Visit www.hondapowerequipment.com

INDEX

ASSEMBLY 57
COMPONENT IDENTIFICATION 8
CONTENTS 3
CONTROLS 10
- Auto Throttle® System 13
- Choke Rod 11
- Circuit Breaker 14
- Circuit Protector 15
- Engine Switch 10
- Fuel Valve Lever 11
- Ground Fault Circuit Interrupter (GFCI) 16
- Ground Terminal 12
- Oil Alert® System 13
- Starter Grip 10
- Voltage Selector Switch (Dual Voltage System) 12

GENERATOR SAFETY 5
- Important Safety Information 6
- Safety Label Locations 5

GENERATOR USE 20
- AC Applications 21
- AC Operation 22
- AC Receptacle Selection 23
- Auto Throttle® System 29
- Connections to a Building's Electrical System 20
- Ground System 20
- High Altitude Operation 30
- Special Requirements 20

MAINTENANCE 36
- Air Cleaner Service 40
- Engine Oil Change 39
- Fuel Sediment Cup Cleaning 41
- Maintenance Safety 37
- Maintenance Schedule 38
- Spark Arrester Maintenance 43
- Spark Plug Service 42
- The Importance of Maintenance 36

PRE-OPERATION CHECK 31
Engine Oil 31
Fuel Recommendations 33
Refueling 32
SPECIFICATIONS 54
STARTING THE ENGINE/STOPPING THE ENGINE 34
STORAGE 44
Storage Precautions 48
Storage Preparation 44
Removal From Storage 48
TECHNICAL INFORMATION 52
Air Index 54
Emission Control System Information 52
TRANSPORTING 49
TROUBLESHOOTING 50
WARRANTY SERVICE INFORMATION 68
CUSTOMER SERVICE INFORMATION 68
DEALER LOCATOR INFORMATION 68
Honda PUBLICATIONS 69
WIRING DIAGRAM 55

MEMO

HONDA

The Power of Dreams

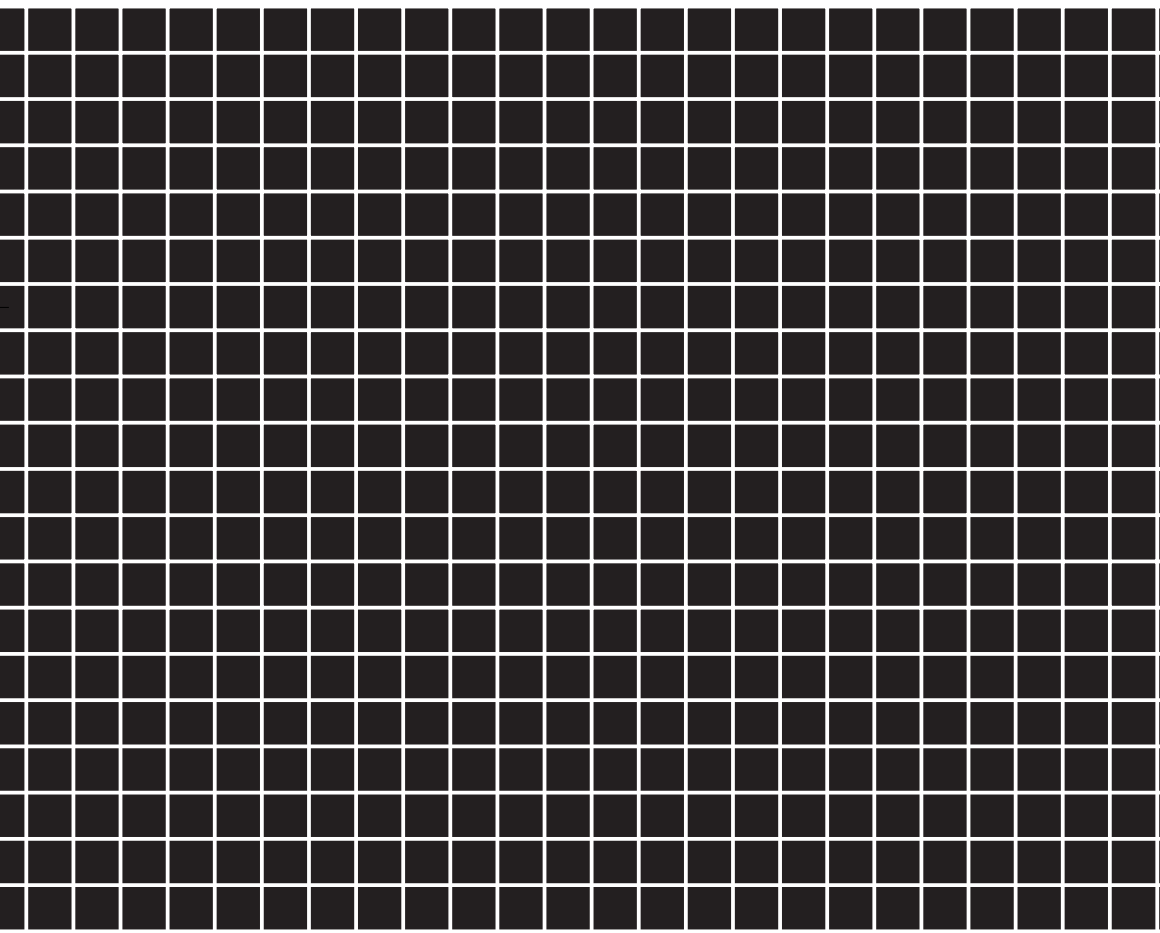

K2:EB5000X

00X31Z226060

EM3

AH 英 HC

Hi Printed in China