Empsterm

COFFEE MAKER

INSTRUCTION MANUAL

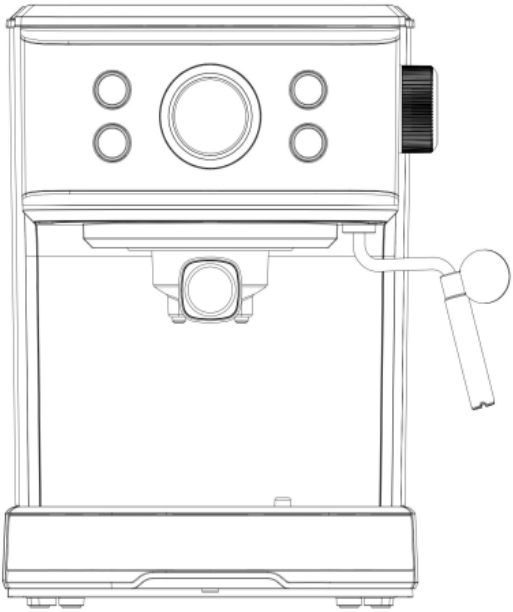

Model: EM-04E

Read this manual thoroughly before using and save it for future reference

shenzhenshiyouchuangdapindianzikejiyouxiangongsi

ADDRESS:ShenzhenshiLuohuqu JiabinluNo.4028TaipingyangShangmaodashaBArea1711

IMPORTANT SAFEGUARDS

Before using the electrical appliance, the following basic precautions should always be followed including the following:

1. Read all instructions.

2. Before using check that the voltage of wall outlet corresponds to rated voltage marked on the rating plate.

3. This appliance has been incorporated with a grounded plug. Please ensure the wall outlet in your house is well earthed.

4. To protect against fire, electric shock and injury to persons do not immerse cord, plug in water or other liquid.

5. Remove plug from wall outlet before cleaning and when not in use. Allow appliance cool down completely before taking off, attaching components or before cleaning.

6. Do not operate any appliance with a damaged cord or plug or after the appliance malfunctions, or is dropped or damaged in any manner, return appliance to the nearest authorized service facility for examination, repair or electrical or mechanical adjustment.

7. The use of accessory attachments not recommended by the appliance manufacturer may result in fire, electric shock or injury to persons.

8. Place appliance on flat surface or table, do not hang power cord over the edge of table or counter.

9. Ensure power cord do not touch hot surface of appliance.

10. Do not place the coffee maker on hot surface or beside fire in order to avoid being damaged.

11. To disconnect, remove plug from wall outlet. Always hold the plug. But never pull the cord.

12. Do not use appliance for other than intended use and place it in a dry environment.

13. Close supervision is necessary when your appliance is being used near children.

14. Be careful not to get burned by the steam.

15. Do not touch the hot surface of appliance. Use handle or knobs.

16. Do not let the coffee maker operate without water.

17. Do not remove the metal funnel when appliance is brewing coffee or when releasing steam.

18. Connect plug to wall outlet before using and turn any switch off before plug is removed from wall outlet.

19. This appliance can be used by children aged from 8 years and above and persons with reduced physical, sensory or mental capabilities or lack of experience and knowledge if they have been given supervision or instruction concerning use of the appliance in a safe way and understand the hazards involved. Children shall not play with the appliance. Cleaning and user maintenance shall not be made by children unless they are older than 8 and supervised.

20. Children should be supervised to ensure that they do not play with the appliance.

21. Operating or storing environment temperature shall be more than 0°C.

22. This appliance is intended to be used in household and similar applications such as:

– staff kitchen areas in shops, offices and other working environments;

– farm houses;

– by clients in hotels, motels and other residential type environments;

– bed and breakfast type environments.

23. Do not use outdoors.

24. SAVE THESE INSTRUCTIONS.

25. If you do not use the product for a long time, you need to turn on the power and then release for 3 minutes before leaving this product.

26.If you cut off power during steam release, residual heat will make product continue to release steam.

for a length of time, the product will stop releasing steam immediately once you turn off steam knobsteam.

KNOW YOUR COFFEE MAKER

A. Drip tray
B. Removable shelf
C. Base
D. Funnel handle
E. Metal funnel
F. 1 Cup steel mesh
G. 2 Cup steel mesh
H. Steam button
I. Power buttone
J. 2-cup coffee button
K. 1-cup coffe button
L.Top cover
M. Water handle
N.Water tank cover
O. Water tank
P. Main body
Q. Coffee spoon
R.Steam control knob
S. Steam wand
T. Froth devic
U.Capsule filter
V. Capsule funnel

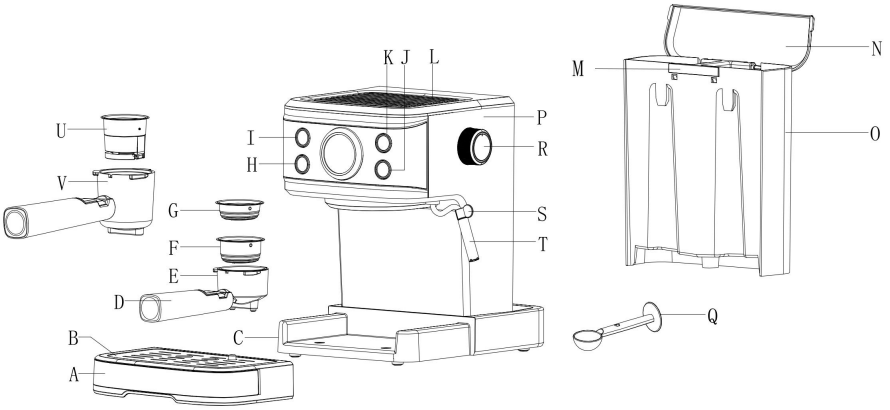

BEFORE THE FIRST USE

To ensure the first cup of coffee tastes excellent, you should rinse the coffee maker with warm water as follows:

1. Open water tank cover, fill water into water tank, water level should not exceed the “MAX” mark in water tank. Then replace the water tank cover.

Note: the appliance is supplied with a detachable water tank for easy cleaning, you can fill water tank with water first, and then attach water tank into the appliance.

2. Set steel mesh into metal funnel (no coffee in steel mesh), make sure the tube on the funnel aligns

with groove in the appliance, then insert the funnel into the appliance from the “ ” position, and fix them into coffee maker firmly by turning it anticlockwise until it is at the “ ” position.

3. Place an jug on removable cup shelf. Make sure steam control knob is on the OFF position.
4. Connect into power source, press power button, power indicator flashes, the machine begins preheating, after power indicator is solidly on, the preheating is completed
5. Press 2-cup coffee button, the unit will pump water for about 25s, pour out water in the cup then clean them thoroughly, now the appliance is ready for making coffee.

Note: There may be noise when pumping water for the first time, it is normal that the appliance is releasing the air inside. After about 20s, the noise will disappear.

PREHEATING

To make a cup of good hot Espresso coffee,

we recommend you should preheat the appliance beforemaking coffee, including metal funnel,

steel mesh and cup, so that the coffee flavour can not beinfluenced by cold parts.

1. Remove detachable water tank and open water tank cover to fill it with desired water, the water level should not exceed the “MAX” mark in the tank. Then replace water tank
2. Set steel mesh into metal funnel, make sure the tube on the funnel aligns with groove in the appliance, then insert the funnel into the appliance from the “ ” position, and fix them into coffee maker firmly by turning it anticlockwise until it is at the “ ” position.
3. Place an espresso cup on removable cup shelf.
4. Then connect appliance to power supply. Make sure steam control knob is on the OFF position.
5. Press power button, power indicator flashes, the machine begins preheating, after power indicator is solidly on, it means that preheating is completed, press 2-cup coffee button, the machine pumps water, when there is water flowing out, press this coffee button again to stop pumping water immediately. The purpose of this step is to pump the water of water tank into boiler.
6. When power indicator is solidly on, it indicates the preheating is finished

MAKE ESPRESSO

1. Remove funnel by turning it clockwise. Add ground coffee into steel mesh with measuring spoon, a spoon of ground coffee powder can make about a cup of top-grade coffee, then press ground coffee powder tightly with the tamper.
2. Set steel mesh into metal funnel, make sure the tube on the funnel aligns with groove in the appliance, then insert the funnel into the appliance from the “ ” position, and fix them into coffee maker firmly by turning it anticlockwise until it is at the “ ” position.
3. Place a cup on removable cup shelf.

4. After preheating is completed, press 1-cup or 2-cup coffee button, the product will start brewing, working time for 1-cup coffee is 15 seconds and 25 seconds for 2-cup coffee .
5. At the time corresponding coffee button indicator is to be illuminated, when the time up ，

coffee maker stops working automatically ,and the corresponding coffee button indicator will off.

6. Press and hold 1-cup button for 3 seconds, 1-cup button flashes, entering setting mode, press 1-cup button again to start dispensing coffee, when the specified time is reached, press 1 cup button to complete setting which can be memorized by the unit. Working duration for 1-cup coffee can be set up to 45s.Press and hold 2-cup button for 3 seconds, 2-cup button flashes, entering setting mode, press 2-cup button again to start dispensing coffee, when the specified time is reached, press 2 cup button to complete setting which can be memorized by the unit. Working duration for 1-cup coffee can be set up to 90s.

   WARNING: Do not leave the coffee maker unattended during making coffee, as you need operate manually sometimes!

7. After finish making coffee, take metal funnel out by turning it clockwise, then pour coffee residue out with steel mesh pressed by press bar.
8. Let them cool down completely, then rinse under running water.

USING THE PORTA-FILTER FOR OriginalLine NESPRESSO® CAPSULES

Note: The filter only matches Nespresso® capsules.

1. Lift the lid of the OriginalLine Nespresso® capsule filter. Place the OriginalLine Nespresso® capsule inside the filter and then close the lid.



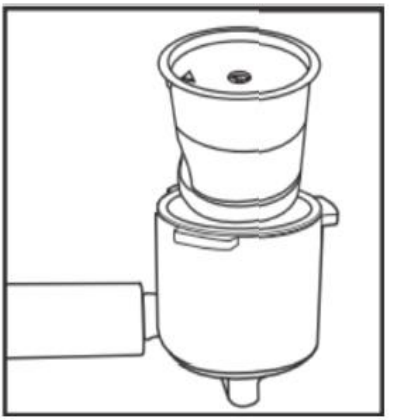

2. Set the OriginalLine Nespresso® capsule filter into capsule funnel, then put the capsule funnel under the metal funnel holder ,then insert the funnel into the appliance from the " " position, and fix them into coffee maker firmly by turning it anticlockwise until it is at the " " position.

3. place the hot cup (yourself cup) on removable cup shelf.

4. After preheating is completed, you should press 1-cup or 2-cup coffee button , wait for a moment, there will be coffee flowing out.working time for 1-cup coffee is 15 seconds and 25 seconds for 2-cup

coffee . working time is Max 60s, unit will automatically stop working if no any operation within 60s.

5. After finishing making coffee, press power button, and all the indicator r go out and the coffee maker stops working, your coffee is ready now.

6. You can take the metal funnel out by turning clockwise, then pour the capsule filter.

7. Let them cool down completely, then rinse under running water.

MAKE CAPPUCCINO/FROTHED MILK

You get a cup of cappuccino when you top up a cup of espresso with frothed milk.

Method:

1. Prepare espresso first with container big enough according to the part **"MAKE ESPRESSO"**, make sure that steam control knob is at the OFF position.
2. Press Steam button, Coffee button indicator will be extinguished, wait until Steam button indicator is illuminated.

Note: During operation, Steam button indicator will cycle on and off to maintain desired temperature.

3. Fill a jug with about 100 ml of milk for each cappuccino to be prepared, you are recommended to use whole milk at refrigerator temperature (not hot!).

Note: In choosing the size of jug, it is recommended the diameter is not less than 70±5mm, and bear in mind that the milk increases in volume by 2 times, make sure the height of jug is enough.

4. Turn steam control knob slowly anti-clockwise, steam will come out from frothing nozzle

Note: Never turn steam control button rapidly, as the steam will accumulate rapidly within short time which may increase a potential risk of explosion.

5. Insert frothing nozzle into the milk about two centimetre, froth milk in the way of moving vessel round up and down.
6. When the required result is reached, turn steam control knob to OFF position.

Note: Clean steam outlet with wet sponge immediately after steam stops producing, but care not to hurt!

7. Pour the frothed milk into the espresso prepared, now the cappuccino is ready. Sweeten to taste and if desired, sprinkle the froth with a little cocoa powder.
8. Press Power button to cut off power. All indicators will be extinguished.

Note: If you want to make coffee immediately after making steam, coffee indicator will flash for alarming upon pressing coffee button, at this time you should turn steam control knob to the ON position to pump hot water in order to let unit cool down.

AUTOMATIC POWER OFF FUNCTION

If there is no any operation within 25 minutes, the unit will power off automatically.

CLEANING AND MAINTENANCE:

1.Turn off coffee maker and let the coffee maker cool down completely before cleaning.

2. Clean housing of coffee maker with moisture-proof sponge often and clean water tank, drip tray and removable cup shelf regularly then dry them.

Note: Do not clean with alcohol or solvent cleanser. Never immerse the housing in water for cleaning.

3. Detach metal funnel by turning it clockwise, get rid of coffee residue inside, then clean it with cleanser, but at last rinse with clear water.

4. Clean all the attachments in the water and dry them thoroughly.

5. After the machine works for 500 cycles (including coffee, steam and other functions), all the indicators quickly flash 5 times at the same time once preheating is completed, reminding you of descaling, if you do not descale, this will happen every time when you use the machine; in standby state, at the same time press and hold Manual coffee button and 2-cup coffee button for 3s, and the two indicators quickly flash 3 times, reminding you of cancelling descaling, and the number of working cycles returns to zero.

CLEANING MINERAL DEPOSITS

1. To make sure your coffee maker operates efficiently, internal piping is clean and the flavor of coffee is optimal, you should clean away the mineral deposits left every 2-3 months.

2.Fill water tank with water and descaler to the MAX level (the proportion of water and descaler is 4:1, the detail refers to the instruction of descaler. Please use “household descaler”, you can use the citric acid (obtainable from chemist’s or drug stores) instead of the descaler (the one hundred parts of water and three parts of citric acid).

3.According to the preheating program, put the metal funnel (without coffee powder in it) and jug in place. Brew water as per **“ PREHEATING”**

4. Press Power button, power indicator will be flashes, press Coffee button, make sure steam control knob is in the Off position, when there is water flowing out, press Coffee button to stop pumping, and wait for a moment, the coffee maker begins to preheat

5. When Power button indicator is solidly on, it shows preheating is finished. Press Coffee button and make two cups of coffee (about 2Oz). press Coffee button to stop pumping.

6. Press Steam button, Coffee button indicator will be extinguished, wait until Steam button indicator is illuminated. Make steam for 2min by turning steam control knob, then turn steam control knob to the OFF position to stop making steam. Press Power button to turn off the unit immediately, make the descaler deposit inside the unit at least 15 minutes.

7. Press Power button to restart unit, wait until Power button indicator is solidly on,, then press Coffee

button to brew until no descaler is left.

8. Brew with tap water in the MAX level, repeat steps 4-6 for 3 times, then brew until no water is left in water tank.

TROUBLE SHOOTING

Symptom	Cause	Corrections
The metal parts in the tank have rust.	Descaler is not recommended type. It may corrode the metal parts in the tank.	Use the descaler recommended by manufacturer.
Water leaks from the bottom of coffee maker.	There is much water in the drip tray.	Please clean the drip tray.
	The coffee maker is malfunction.	Please contact with the authorized service facility for repairing.
Water leaks out of outer side of filter.	There is some coffee powder on filter edge.	Get rid of them.
Acid (vinegar) taste exists in Espresso coffee.	No clean correctly after cleaning mineral deposits.	Clean coffee maker per the content in “before the first use” for several times.
	Coffee powder is stored in a hot, wet place for a long time. The coffee powder turns bad.	Please use fresh coffee powder, or store unused coffee powder in a cool, dry place. After opening a package of coffee powder, reseal it tightly and store it in a refrigerator to maintain its freshness.
Coffee maker cannot work any more.	Power outlet is not plugged well.	Plug the power cord into a wall outlet correctly, if the appliance still does not work, please contact with the authorized service facility for repairing.
Steam cannot froth.	The steam indicator is not illuminated.	Only after the steam indicator is illuminated, the steam can be used to froth.
	The container is too big or the shape not fits.	Use high and narrow container.
	You have used skimmed milk	Use whole milk or half-skimmed milk

Do not take apart the appliance by yourself if the cause of failure is not found, you had better contact the qualified servicing center.

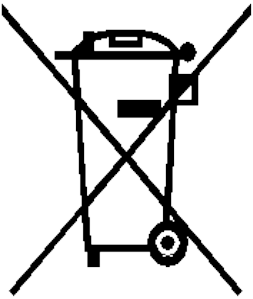

Environment friendly disposal

You can help protect the environment!
Please remember to respect the local regulations: hand in the non-working electrical equipment to an appropriate waste disposal center.