BUTLER
SPECIALTY COMPANY
Est. 1930
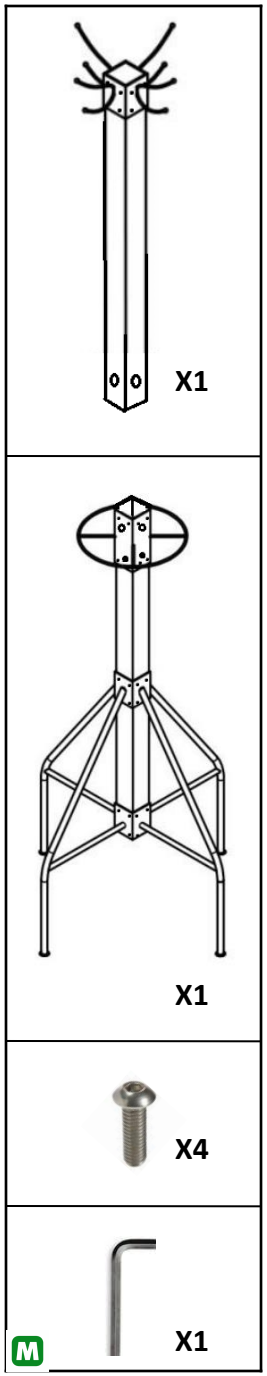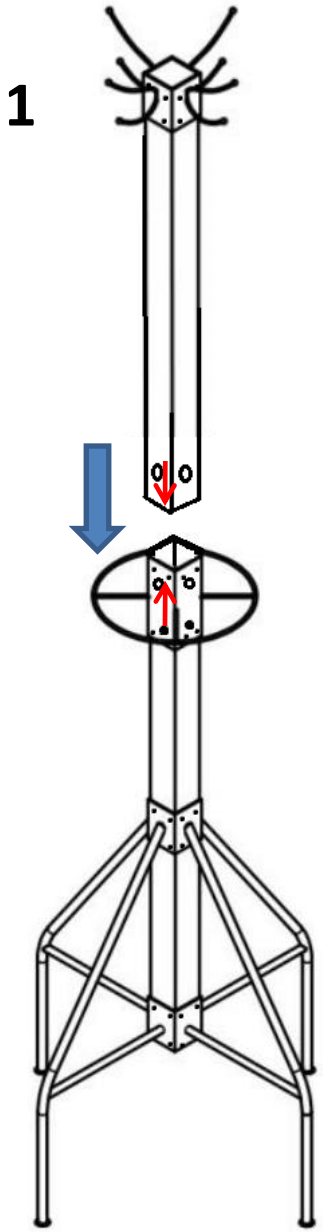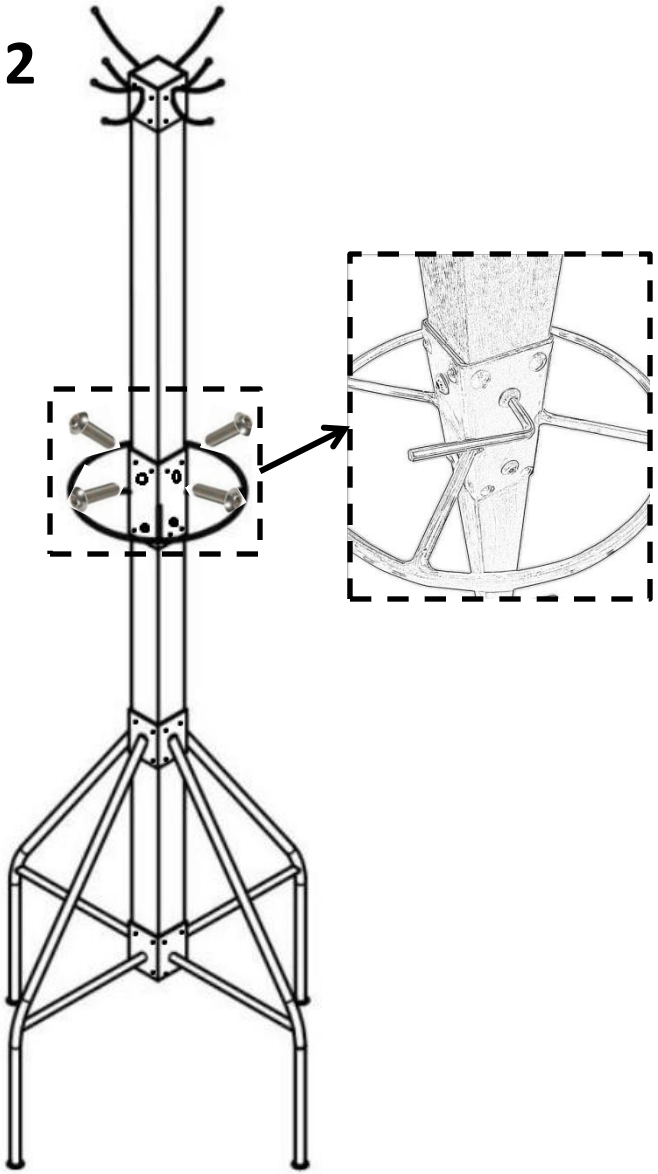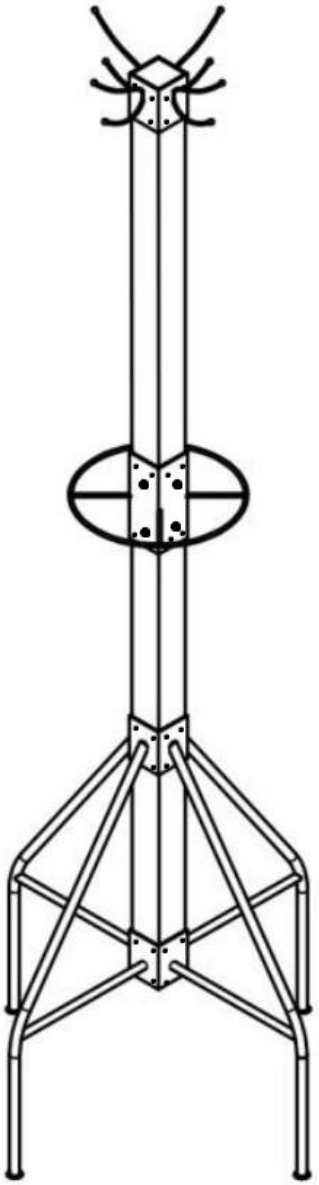
ASSEMBLY INSTRUCTION