

GF11000 Titan 32 Series Petrol Generator

User Manual

[Revision 1.0]

READ THIS MANUAL CAREFULLY BEFORE USE – FAILURE TO DO SO MAY RESULT IN INJURY, PROPERTY DAMAGE AND MAY VOID WARRANTY. • KEEP THIS MANUAL FOR FUTURE REFERENCE. • Products covered by this manual may vary in appearance, assembly, inclusions, specifications, description, and packaging.

The product is NOT supplied with engine oil, although traces of oil from the manufacturing process may be present. It is essential to add adequate engine oil of the correct type to the engine before use. **Failure to add engine oil will void the product warranty**.

THE BATTERY MAY HAVE SOME CHARGE ON ARRIVAL, IT IS IMPORTANT HOWEVER THAT THE BATTERY IS CHARGED PRIOR TO USE.

Safety

Safety messages are designed to alert you to possible dangers or hazards that could cause death, injury or equipment or property damage if not understood or followed. Safety messages have the following symbols:



You WILL be KILLED or SERIOUSLY INJURED if you do not follow instructions.



You CAN be KILLED or SERIOUSLY INJURED if you do not follow instructions.



You CAN be INJURED if you do not follow instructions or equipment damage may occur.

It is vital that you read and understand this user manual before using the product, including safety warnings, and any assembly and operating instructions. Keep the manual for future reference.

Safety precautions and recommendations detailed here must be fully understood and followed to reduce the risk of injury, fire, explosion, electrical hazard, and/or property damage.

Safety information presented here is generic in nature – some advice may not be applicable to every product. The term "equipment" refers to the product, be it electrical mains powered, battery powered or combustion engine powered.

- **Before Use** - If you are not familiar with the safe operation/handling of the equipment or are in any way unsure of any aspect of suitability or correct use for your application, you should complete training conducted by a person or organization qualified in safe use and operation of this equipment, including fuel/electrical handling and safety.
- Do NOT operate the equipment in flammable or explosive environments, such as in the presence of flammable liquids, gases, or dust. The equipment may create sparks or heat that may ignite flammable substances.
- Keep clear of moving parts.
- Equipment may be a potential source of electric shock or injury if misused.
- Do NOT operate the equipment if it is damaged, malfunctioning or is in an excessively worn state.
- Do NOT allow others to use the equipment unless they have read this manual and are adequately trained.
- Keep packaging away from children - risk of suffocation! Operators must use the equipment correctly. When using the equipment, consider conditions and pay due care to persons and property.

General Work Area Safety

- Work areas should be clean and well it.
- Do not operate the equipment if bystanders, animals etc are within operating range of the equipment or the general work area.
- If devices are provided for connecting dust extraction / collection facilities, ensure these are connected and used properly. Dust collection can reduce dust-related hazards.

General Personal Safety

- Wear appropriate protective equipment when operating, servicing, or when in the operating area of the equipment to help protect from eye and ear injury, poisoning, burns, cutting and crush injuries. Protective equipment such as safety goggles, respirators, non-slip safety footwear, hard hat, hearing protection etc should be used for appropriate equipment / conditions. Other people nearby should also wear appropriate personal protective equipment. Do not wear loose clothing or jewellery, which can be caught in moving parts. Keep hair and clothing away from the equipment.
- Stay alert and use common sense when operating the equipment. Do not over-reach. Always maintain secure footing and balance.
- Do not use the equipment if tired or under the influence of drugs, alcohol, or medication.
- This equipment is not intended for use by persons with reduced physical, sensory, or mental capabilities.

General Fuel Safety

- Petrol/fuel/gasoline is extremely flammable – keep clear of naked flames or other ignition sources.
- Do not spill fuel. If you spill fuel, wipe it off the equipment immediately – if fuel gets on your clothing, change clothing.
- Do NOT smoke near fuel or when refuelling.
- Always shut off the engine before refuelling.
- Do NOT refuel a hot engine.
- Open the fuel cap carefully to allow any pressure build-up in the tank to release slowly.
- Always refuel in well-ventilated areas.
- Always check for fuel leakage. If fuel leakage is found, do not start, or run the engine until all leaks are fixed.

General Carbon-Monoxide Safety

- Using a combustion engine indoors **CAN KILL IN MINUTES**. Engine exhaust contains carbon-monoxide – a poison you cannot smell or see.
- Use combustion engines OUTSIDE only, and far away from windows, doors, and vents.

General Equipment Use and Care

- Keep packaging away from children and pets, potential risk of suffocation or choking.
- The equipment is designed for domestic use only.
- Handle the equipment safely and carefully.
- Before use, inspect the equipment for misalignment or binding of moving parts, loose components, damage, or any other condition that may affect its operation. If damaged, have the equipment repaired by an authorised service centre or technician before use.
- Prevent unintentional starting of the equipment - ensure equipment and power switches are in the OFF position before connecting or moving equipment. Do not carry equipment with hands or fingers touching any controls. Remove any tools or other items that are not a part of the equipment from it before starting or switching on.
- Do not force the equipment. Use the correct equipment for your application. Equipment will perform better and be safer when used within its design and usage parameters.
- Use the equipment and accessories etc. in accordance with these instructions, considering working conditions and the work to be performed. Using the equipment for operations different from those intended could result in hazardous situations.
- Always keep equipment components (engines, hoses, handles, controls, frames, housings, guards etc) and accessories (cutting tools, nozzles, bits etc) properly maintained. Keep the equipment clean and, where applicable, properly lubricated.
- Store the equipment out of reach of children or untrained persons. To avoid burns or fire hazards, let the equipment cool completely before transporting or storing. Never place or store the equipment near flammable materials, combustible gases, or liquids etc.
- The equipment is not weather-proof, and should not be stored in direct sunlight, at high ambient temperatures or locations that are damp or humid.
- Do not clean equipment with solvents, flammable liquids, or harsh abrasives.
- For specific equipment safety use and care, see Equipment Safety.

© GenPower

General Electrical Safety

- Inspect electrical equipment, extension cords, power bars, and electrical fittings for damage or wear before each use. Repair or replace damaged equipment immediately.
- Ensure all power sources conform to equipment voltage requirements and are disconnected before connecting or disconnecting equipment.
- When wiring electrically powered equipment, follow all electrical and safety codes.
- Always use a Residual Current Device (RCD) (GFCI) / Earth Leakage Circuit Breaker / Safety Switch when operating this item (electrical items only).
- High voltage / high current power lines may be present. Use extreme caution to avoid contact or interference with power lines. Electrical shock can be fatal.

General Electrical Safety

- Electrically grounded equipment must have an approved cord and plug and be connected to a grounded electrical outlet.
- Do NOT bypass the ON/OFF switch and operate equipment by connecting and disconnecting the electrical cord.
- Do NOT use equipment that has exposed wiring, damaged switches, covers or guards.
- Do NOT use electrical equipment in wet conditions or in damp locations.
- Do NOT use electrical cords to lift, move or carry equipment.
- Do NOT coil or knot electrical cords, and ensure electrical cords are not trip hazards.

General Service Information

- The equipment must be serviced or repaired at authorised service centres by qualified personnel only.
- Replacement parts must be original equipment manufacturer (OEM) to ensure equipment safety is maintained.
- Do NOT attempt any maintenance or repair work not described in this manual.
- After use, the equipment and components may still be hot – allow the equipment to cool and disconnect spark plugs and/or electrical power sources and/or batteries from it before adjusting, changing accessories, or performing repair or maintenance.
- Do NOT adjust while the equipment is running.
- Perform service-related activities in suitable conditions, such as a workshop.
- Replace worn, damaged or missing warning/safety labels immediately.

Child Choking Hazard!



- **WARNING: CHOKING HAZARD - CHILDREN UNDER 8 YRS. CAN CHOKE OR SUFFOCATE ON SMALL PARTS. ADULT SUPERVISION REQUIRED.**
- Carefully inspect anything a baby or child could gain access to, including this product & packaging.
- Dangers include anything of a size that could become stuck or lodged in a baby or child's airway.
- Dangers include things like raw, hard fruit and vegetable pieces, large pieces of meat, bones or sausage skins, popcorn, nuts, hard lollies and corn chips, small magnets and batteries, coins, beads, marbles and small uninflated balloons, broken toys and smaller toys, buttons, keys, and coins. But there are also many more.
- Pay particular attention to accessories, nuts, bolts, screws, washers, caps, covers, loose parts, parts that could be removed or break off, pieces of packaging, staples, tape etc.
- In the case of any doubt, secure the item of concern in an appropriate manner, or completely remove the possibility of access by a baby or child.

CO WARNING

⚠ DANGER ⚠

Using an engine or wood/charcoal/gas fuelled appliance indoors CAN KILL YOU IN MINUTES. Engine exhaust and wood/charcoal/gas fumes contain carbon monoxide. This is a poison you cannot see or smell.

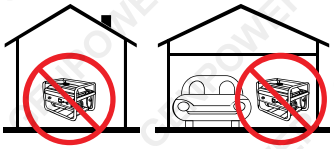

NEVER use inside a building, home, garage, boat, caravan or tent EVEN IF doors and windows are open.

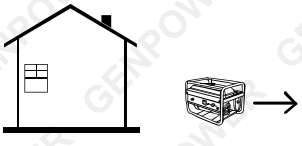

Only use OUTSIDE and far away from windows, doors, and vents.

Avoid other hazards - READ MANUAL BEFORE USE.

GENERAL:
- Do not operate in a hazardous location. Such areas include where there is a risk of explosion of petrol fumes, leaking gas or explosive dusts.
- Do not operate in a confined area where exhaust gases or wood/charcoal/gas fumes could reach dangerous concentrations.

PRODUCTS FEATURING AN ENGINE
- Follow all warnings in the section titled "GENERAL".
- Explosion hazard - never smoke while refuelling.
- Take care not to spill fuel. When refuelling the engine, ensure that the engine has been allowed to cool. Prevent spilling of fuel as this may also ignite with a hot engine.
- Never refuel while engine is running.

GENERATORS
- Follow all warnings in the sections titled "GENERAL" and "PRODUCTS FEATURING AN ENGINE".
- The output of this generator is potentially lethal. The generator should not be connected to a fixed electrical installation except by an appropriately licensed person.
- Not weatherproof – protect your machine. This machine is not weatherproof and should not be exposed to direct sunlight, high ambient temperature, damp conditions, wet conditions or high humidity conditions.

Hazardous Components!

- **BE AWARE THAT THE EQUIPMENT MAY INCLUDE HAZARDOUS COMPONENTS, SUCH AS HOT SURFACES AND MOVING PARTS.**
- **MOVING PARTS CAN CAUSE SERIOUS INJURY AND EVEN DEATH IF USED IMPROPERLY OR WITHOUT SUFFICIENT PPE.**
- **DO NOT USE THIS EQUIPMENT ON UNEVEN SURFACES AND ALWAYS MAINTAIN GOOD BALANCE WHEN USING THIS EQUIPMENT. FAILURE TO DO SO MAY CAUSE SERIOUS INJURY.**
- **MAINTAIN A SECURE GRIP OF THE TRIGGER ASSEMBLY AT ALL TIMES.**

Safety Precautions

- **DANGER: OPERATE THE GENERATOR OUTDOORS ONLY. EXHAUST FUMES CONTAIN CARBON MONOXIDE (CO), AN INVISIBLE AND ODOURLESS GAS THAT CAN CAUSE UNCONSCIOUSNESS OR DEATH.**

- **WARNING: DO NOT OPERATE THE GENERATOR IN RAIN OR WET CONDITIONS. STORE IT IN A DRY, ENCLOSED AREA WHEN NOT IN USE.**
- **WARNING: KEEP THE GENERATOR CLEAN. IMMEDIATELY REMOVE ANY PETROL OR OIL SPILLED ON OR AROUND IT.**
- **DANGER: NEVER CONNECT THE GENERATOR DIRECTLY TO MAINS POWER OR ANOTHER POWER SOURCE.**
- **WARNING: CORRECTLY EARTH THE GENERATOR AND CHECK THE EARTH CONNECTION BEFORE EACH USE.**
- **WARNING: DO NOT TOUCH HOT SURFACES. CONTACT MAY CAUSE SERIOUS BURNS.**

DANGER: ELECTROCUTION HAZARD

Electricity can cause death or serious injury.

- Never use bare wires to connect electrical equipment. Use an approved plug that complies with applicable regulations.
- Do not touch exposed wires while the generator is operating.
- Keep children and bystanders a safe distance from the generator.
- Do not operate the generator unless it is fully assembled as described in this manual.
- Earth the generator correctly and check the earth connection before each use. Earthing requirements vary by location; consult a licensed electrician.
- Do not use damaged plugs, leads or accessories.
- If the circuit breaker requires replacement, use one with the same rating and specifications. Contact an authorised service agent.

DANGER: FIRE HAZARD

Petrol is highly flammable, and the generator becomes hot during operation.

- Never refuel the generator while it is operating.
- Switch off the generator and allow it to cool before refuelling.
- Keep flames, sparks and other ignition sources away. Do not smoke while refuelling.
- Avoid spilling petrol. If a spill occurs, clean it up immediately and wait until all remaining petrol has evaporated before starting the generator.
- Keep flammable materials at least 2 m from the generator during operation.
- Before long-term storage, add fuel stabiliser or drain the fuel tank and carburettor bowl safely.

Caution: Moving-parts hazard

High-speed moving parts can cause injury.

- Keep hands, clothing and other objects away from moving parts while the generator is operating.
- Check the surrounding area and ensure the generator cannot endanger people or nearby equipment.
- Do not lift or move the generator while it is operating. Switch it off and wait until all moving parts have stopped.

Operating Requirements

- Do not place objects on the generator.
- The wheels are intended only for moving the generator over short distances. Long-distance transport may damage them.
- Do not exceed the generator's rated output. Refer to page 14 for the typical power requirements of common household appliances.
- Maintain the generator as specified in the Maintenance section.
- Operate and store the generator in a clean, dry, low-dust area to prevent damage and extend its service life.

DANGER

Running combustion engines in confined areas CAN KILL IN MINUTES. Engine exhaust fumes contain carbon-monoxide – a deadly gas that you cannot smell or see.



NEVER run a combustion engine in confined areas EVEN IF windows and doors are open. ONLY run petrol engines OUTDOORS and away from doors, windows, and vents.

Do not operate the equipment in hazardous locations, such as where there may be a risk of fire or explosions from flammable liquids, gases or dust.

Do not operate the equipment in confined areas where exhaust gases, smoke or fumes could reach dangerous concentrations.

Do not refuel a combustion engine while it is running on or hot.

Never smoke while refueling combustion engines or handling flammable substances.

For generators, the electrical output is potentially lethal and must only be connected to a fixed electrical installation by an appropriately licensed person.

Be aware that the equipment may include hazardous components, such as blades, hot surfaces and moving parts.

Handle any flammable substance with extreme caution.

© GenPower

Safety Symbols

The product may have safety warning labels attached to it, explained below. Understand the symbols on your product and their meanings. If any stickers become unreadable, unattached etc., replace them.

 **Flammable Material Hazard** Flammable liquids, gases, or substances etc may present. Avoid ignition sources and open flames. Danger of fire.	 **Read User Manual** Read and fully understand product safety warnings, operation, procedures etc before using the product.	 **Use Hand Protection** Wear appropriate hand protection and take due care as the product or use of the product may present hand hazards.	 **Carbon-Monoxide Hazard** Do not use the product in confined areas or without adequate ventilation. Carbon-monoxide poisoning can be fatal.
 **Electrocution / Electrical Shock Hazard** High voltage or high current electricity may be present or required by the product. Take due care when handling electrical products, cables, plugs and leads. Electrical shock can be fatal.	 **Toxic Fumes / Dust Hazard** Using the product or by-products from use may produce fumes, smoke or particles that could be harmful if inhaled. Wear appropriate breathing protection and have adequate ventilation.	 **Explosive Material Hazard** Combustible liquids, gases, or substances etc may be present. Avoid ignition sources and open flames. Danger of explosion.	 **Cutting / Amputation Hazard** The product may have blades, edges or mechanical devices that can cause severe cut injury to fingers, limbs etc. Take due care when handling and using the product.
 **Crush Hazard** The product may have blades, edges or mechanical devices that can cause severe crush injury to fingers, limbs etc. Take due care when handling and using the product.	 **Single Operator Only** The product must be operated by a single person only. More than one person operating the product may introduce additional hazards.	 **Use Face Protection** Wear appropriate full-face protection and take due care as the product or use of the product may present face and eye hazards.	 **Use Foot Protection** Wear appropriate foot protection and take due care as the product or use of the product may present foot hazards.
 **Use Eye / Ear / Head Protection** Wear appropriate eye and / or ear and / or head protection and take due care as the product or use of the product may present eye, hearing, and head hazards.	 **Running Hazard** Do not run on or near the product as doing so may present a fall hazard.	 **Diving Hazard** Do not dive into the product as doing so may present a neck / head injury hazard.	 **Adult Supervision Required** Always supervise children and other users of a product to prevent drowning or injury.
 **Skin Penetration / Puncture Hazard** The product may produce pressure, emit liquids or objects that can cause severe injury to fingers, limbs, blood etc. Take due care when handling and using the product.	 **Hot Surface Hazard** Be aware that the product may produce high temperatures and hot surfaces that can cause burn injuries.	 **Flying Debris Hazard** Be aware that the product or use of the product may present hazards produced by flying debris. Wear appropriate clothing and protective devices.	 **Moving Parts Hazard** Be aware that the product contains or uses mechanical devices that move or rotate. Always wait for moving parts to stop fully before handling the product, adjusting, maintenance etc.

© GenPower

 **Carbon-Monoxide Hazard** Do not use the product in confined areas or without adequate ventilation. Carbon-monoxide poisoning can be fatal.	 **Pull Hazard** Be aware that the product contains or uses mechanical devices that can pull in objects and can cause severe injury to fingers, limbs etc. Take due care when handling and using the product.	 **Slope / Fall Injury Hazard** Be aware that using the product on sloping surfaces or in slippery conditions may present additional dangers from falls and contact with blades, moving parts, hot surfaces etc.	 **"Slam Dunk" Warning** Do NOT attempt "slam dunk" manoeuvres as this may result in severe injury due to falling, product breakage or collapse etc.
 **Electrocution / Electrical Shock Hazard - Outdoor** High voltage or high current electricity may be present or required by the product. Do NOT use in rain, damp, or wet conditions. Electrical shock can be fatal.	 **Electrocution / Electrical Shock Hazard - Disconnect** High voltage or high current electricity may be present or required by the product. Always disconnect the product from the electrical supply before handling the product, adjusting, maintenance etc.	 **Power Line Electrocution Hazard** High voltage / high current power lines may be present. Use extreme caution to avoid contact or interference with power lines. Electrical shock can be fatal.	 **"Kick-Back" Hazard** High level of "kick-back" hazard that can cause the machine to suddenly rotate towards operator. Kick-back injury can be fatal.
 **Winch Operator Position Hazard** Do NOT stand between winch and load. Do NOT use winch to move people.	 **Winch Lift Hazard** Do NOT LIFT load vertically. Use machine to PULL only.	 **Cable Hazard** Ensure that load bearing cable is not kinked or knotted.	 **Winch Cable Hazard** Ensure that there is a minimum number of cable coils on winching mechanism.
 **Winch Hook Hazard** Carry hook to load – do NOT throw or run.	 **Flash / Blinding Hazard** Wear appropriate eye protection for welding. Direct exposure to weld arcs may cause permanent eye injury.	 **Laser Hazard** Laser may be in use – do NOT look directly at laser or allow others to.	 **Choking Hazard** Children under 8 yrs. Can choke or suffocate on small parts. Adult supervision required.

© GenPower

Table of Contents

Safety **2**
Safety Symbols 6
Parts Identification **9**
Features **10**
Before Operation **11**
Earthing the Generator 11
Add Engine Oil 11
Add Petrol 11
Connect the Battery 12
Operation **13**
Starting the Engine 13
Stopping the Engine 14
Emergency Shutdown 14
Storage 14
Power Management **16**
Lead-Acid Battery Care and Maintenance **17**
Top 3 Battery Care Requirements 17
Maintenance **18**
Replacing the Engine Oil 18
Cleaning the Air Filter 19
Cleaning the Fuel Sediment Cup 19
Inspecting and Cleaning the Spark Plug 20
Valve Clearance 20
Troubleshooting **21**
Specifications **22**

© GenPower

Parts Identification

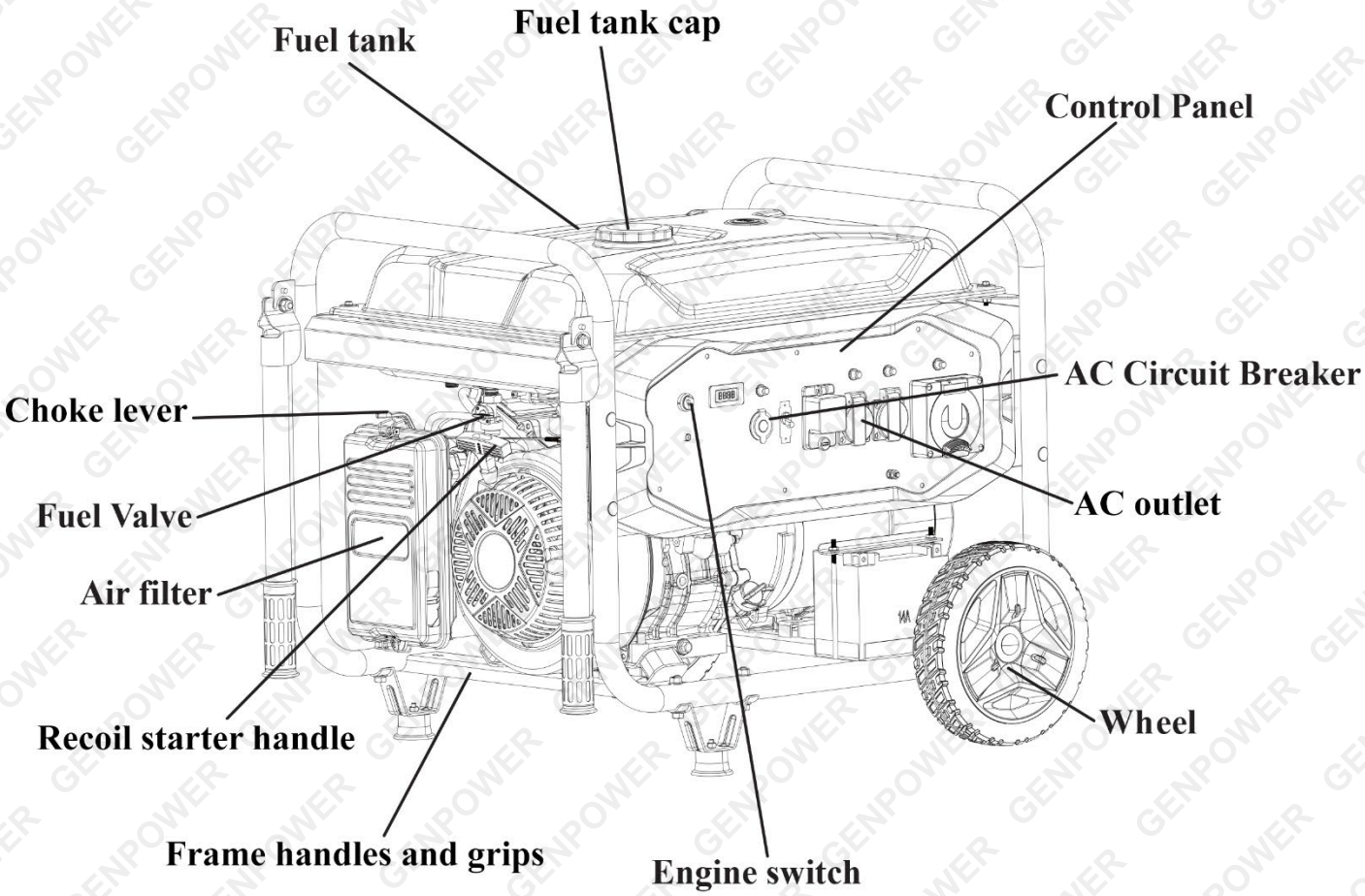

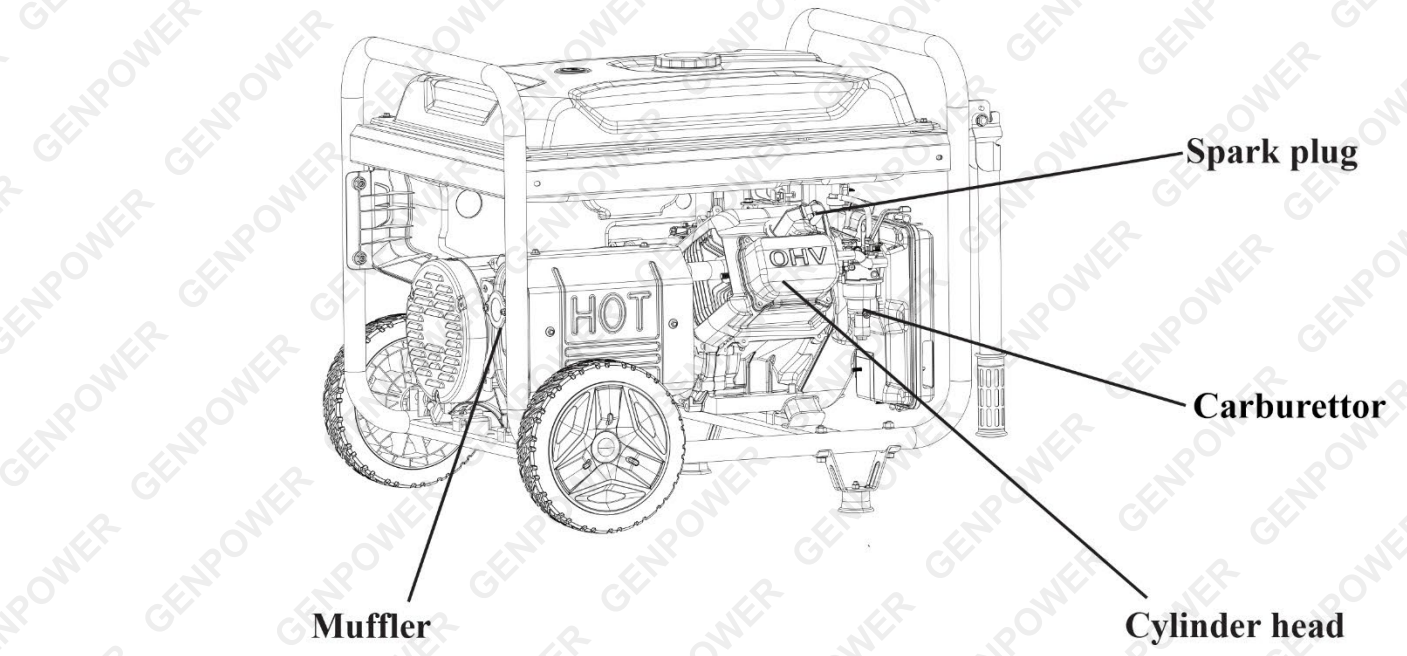

© GenPower

Features

- **Know Your Generator**: Read and understand this manual before operating the generator. Familiarise yourself with all controls, operating procedures and safety requirements.
- **AC Circuit Breaker:** Protects the generator against electrical overload. Press the reset button to reset the circuit breaker after it trips.
- **Air Filter:** Limits the amount of dirt and dust entering the engine during operation.
- **Choke Lever:** Assists with starting a cold engine.
- **Fuel Tank:** Fuel tank capacity varies by model: 15 L or 25 L.
- **Fuel Valve:** Controls the flow of fuel from the tank to the engine. Open the valve before starting and close it after use.
- **Earth Terminal:** Provides an earth connection to help protect against electric shock. Consult a licensed electrician about applicable earthing requirements.
- **Low-Oil Shutdown:** Automatically stops the engine when the crankcase oil level is too low.
- **Oil Filler Cap/Dipstick:** Remove the oil filler cap/dipstick to check the oil level or add oil.
- **Oil Drain Plug:** Remove the oil drain plug to drain the engine oil.
- **Recoil Starter Handle:** Pull the recoil starter handle to start the engine manually.

Before Operation

Earthing the Generator

Earthing requirements depend on how and where the generator is used. Have the earthing arrangement checked by a licensed electrician before use. Do not install an earth stake unless required for the intended configuration.

IMPORTANT! Australian electrical-safety guidance also recommends following the generator's specified earthing arrangement and using a licensed electrician for connections to premises wiring. WA Building and Energy

Add Engine Oil

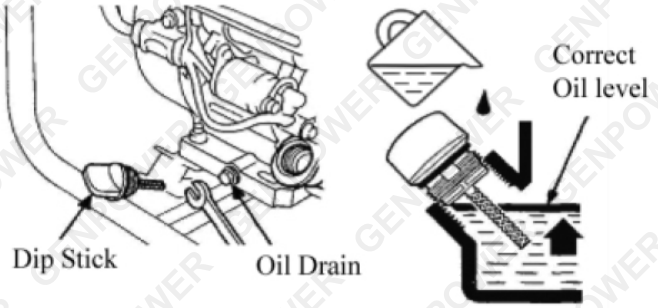

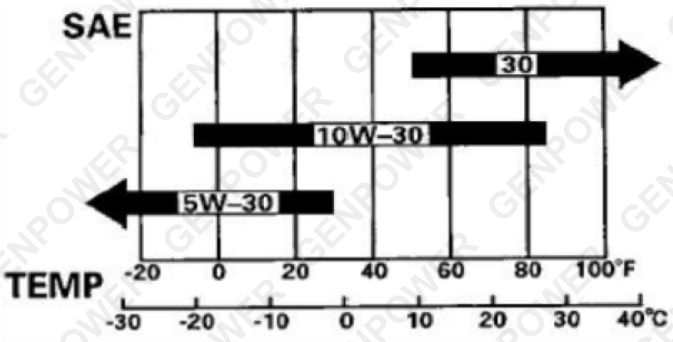

1. Place the generator on a firm, level surface.
2. Remove the oil filler cap/dipstick.
3. Add SAE 10W-30 engine oil. Select another viscosity only when required for the operating temperature.
4. Fill to the upper edge of the oil filler opening. Do not overfill.
5. Refit the oil filler cap/dipstick securely.

Wipe up spilled oil immediately to prevent fire and slipping hazards.

Add Petrol

1. Switch off the generator and allow it to cool.
2. Remove the fuel tank cap.
3. Add fresh, ethanol-free unleaded petrol with a minimum rating of 91 RON. Premium 95 or 98 RON petrol may also be used.
4. Do not fill above the bottom of the fuel strainer.
5. Refit the fuel tank cap securely.

WARNING: Petrol and petrol vapours are highly flammable. Refuel outdoors, away from flames, sparks and other ignition sources. Never refuel while the generator is operating or hot.

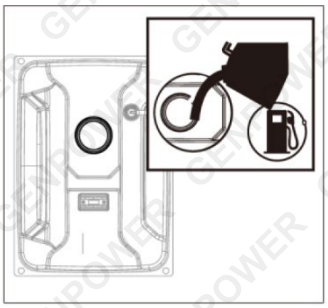

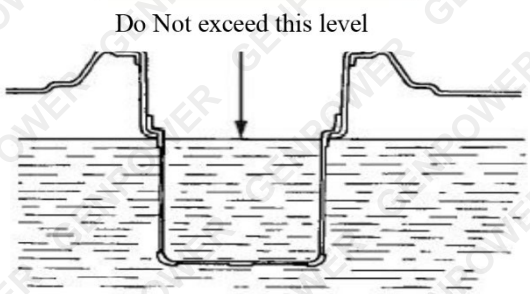

Connect the Battery

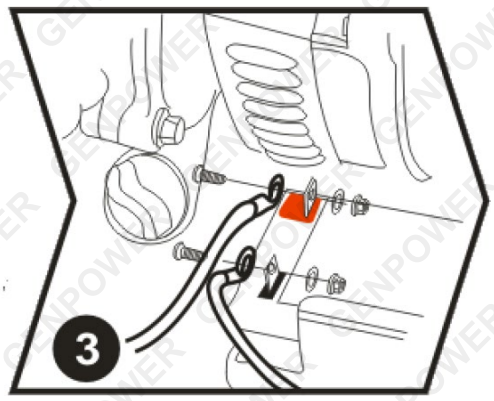

Electric-start models only

1. Ensure the engine switch is in the OFF position.
2. Connect the red cable to the positive (+) terminal.
3. Connect the black cable to the negative (−) terminal.
4. Tighten the terminal nuts securely.
5. Fit the protective rubber covers over both terminals.

WARNING: Do not allow the positive and negative terminals to contact each other. A short circuit may cause sparks, burns or battery damage.

© GenPower

Operation

Starting the Engine

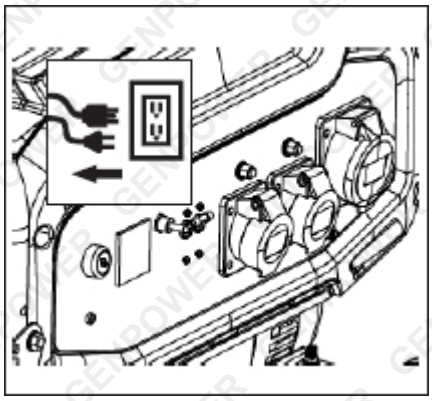

1. Disconnect all electrical loads and set the AC circuit breaker to OFF.

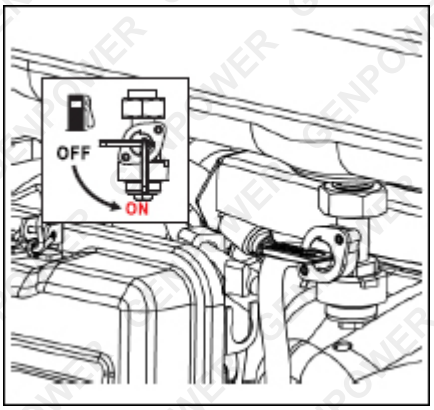

2. Turn the fuel valve to ON.

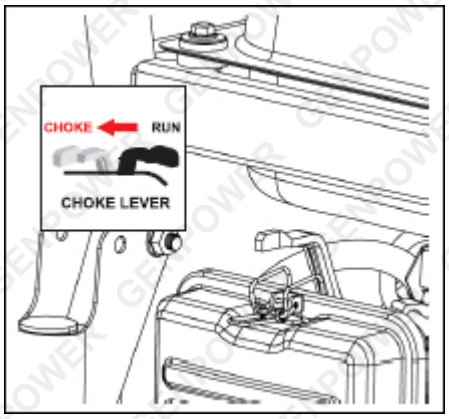

3. For a cold engine, move the choke lever to CHOKE. When restarting a warm engine, leave it in RUN.

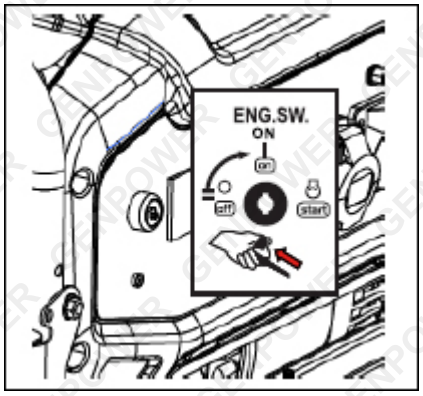

4. Turn the engine switch to ON.

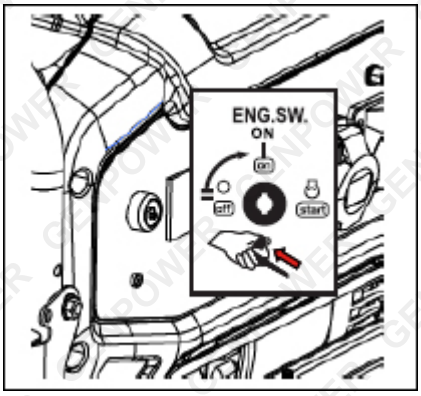

5. Start the engine:

Electric-start models: Turn the engine switch to START. Release it when the engine starts. Do not operate the starter for more than 3 seconds at a time. Wait at least 10 seconds before trying again.

Manual-start models: Pull the recoil starter handle slowly until resistance is felt, then pull firmly. Guide the handle back gently; do not allow it to snap back.

© GenPower

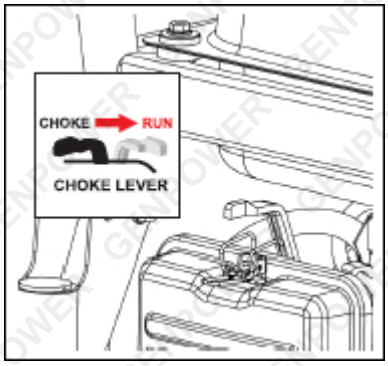

6. Allow the engine to run for 10–20 seconds, then gradually move the choke lever to RUN.

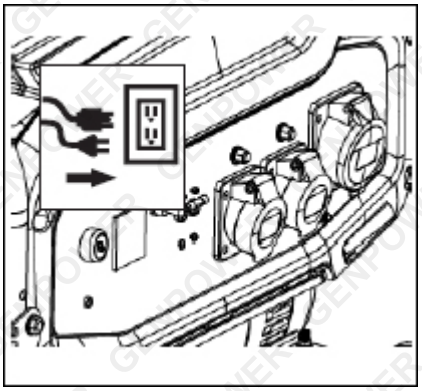

7. Check that the generator is operating normally, then set the AC circuit breaker to ON.

8. Connect appliances one at a time, beginning with the appliance requiring the highest starting power.

IMPORTANT: The combined load must not exceed the generator's rated output. Ensure each connected appliance is operating normally before connecting the next one.

Stopping the Engine

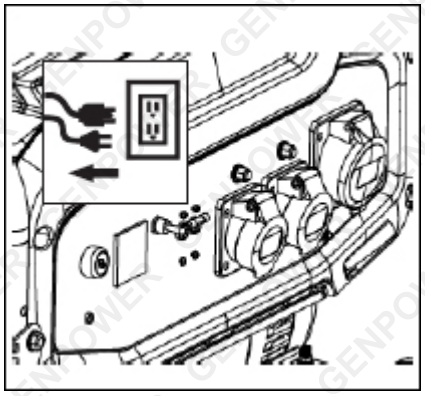

1. Switch off and disconnect all electrical loads.

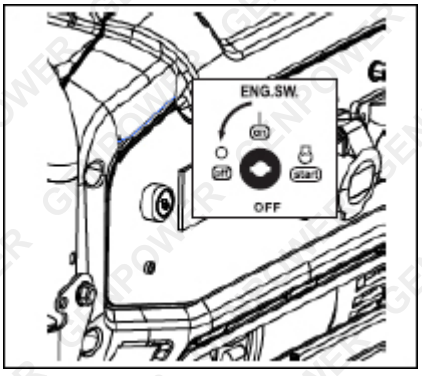

2. Turn the engine switch to OFF.

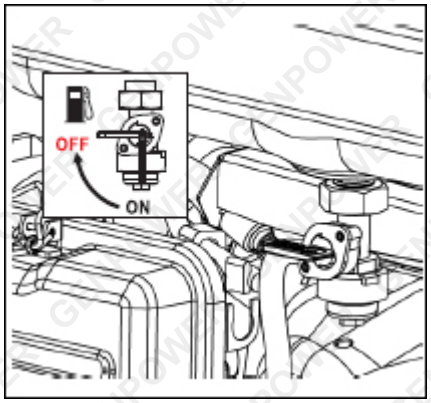

3. Turn the fuel valve to OFF.

Emergency Shutdown

Immediately turn the engine switch to OFF.

WARNING: The generator remains hot after shutdown. Allow it to cool completely before touching, moving, covering or storing it.

Storage

Store the generator in a clean, dry and well-ventilated area, protected from rain, moisture, dust and high temperatures. Cover it only after it has cooled completely.

For long-term storage, either:

- add a suitable fuel stabiliser according to its instructions; or
- drain the fuel tank and carburettor bowl into an approved petrol container, then securely refit the carburettor drain bolt.

Dispose of unwanted petrol in accordance with local regulations.

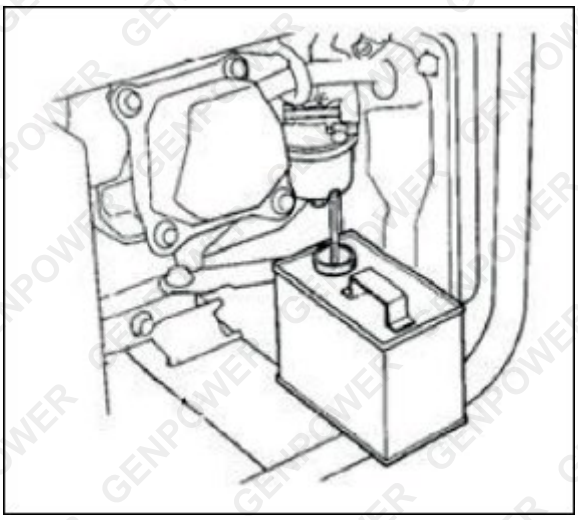

Power Management

The values below are indicative only. Check each appliance's rating label for its actual running and starting

Equipment	Running power	Starting power
69 cm flat-screen television	500 W	800 W
Energy-saving lamp	5–50 W	5–50 W
Electric cooker	1,000 W	1,000 W
Desktop computer	800 W	800 W
DVD player	100 W	100 W
Refrigerator	800 W	1,600 W
Washing machine	300 W	600 W
Electric fan	50 W	100 W
Air conditioner	1,500 W	3,000 W
Welding machine	2,500 W	5,000 W
Rotary hammer drill	1,000 W	1,500 W
Water pump	800 W	1,200 W

Some appliances require more power when starting than during normal operation. Ensure the combined running load and any starting surge do not exceed the generator's rated capacity. Connect appliances one at a time.

© GenPower

Lead-Acid Battery Care and Maintenance

Top 3 Battery Care Requirements

1. **Charge battery before first use**. The battery may arrive with some charge, regardless of this the battery must be charged on the initial charge and for each subsequent charge.
2. **Charge battery immediately when it is depleted.** Do not store a depleted battery. This will permanently impact the life of the battery. If the battery is going to be stored for a period of time, fully charge the battery before storing.

To ensure the battery maintains optimum performance, follow the guidelines outlined below.

- For best results, charge batteries in temperatures between 10°C and 30°C
- When battery is charged, disconnect the charger from the power supply and remove the battery from the charger.
- Inspect the terminals, screws, clamps and cables for breakage, damage, or loose connections. These should be clean, tight, and free of corrosion.
- Use only with the battery charger specified by the manufacturer.
- Ensure that the battery charger electrical cord is not subjected to damage or stress. Do not operate the battery charger if it has a damaged electrical cord or plug.
- Do not use the charger in wet areas or expose it to rain or water.
- Keep the battery clean, dry, free of dirt and grime. A dirty battery can discharge across the grime on top of the battery casing.
- Apply a thin coating of high temperature grease to posts and cable connections for added protection.
- Inspect the battery case for obvious signs of physical damage or warpage. This usually indicates the battery has been overheated or has been overcharged.
- Batteries can explode in the presence of an ignition source, such as a pilot light. To reduce the risk of serious personal injury, never use any cordless product in the presence of open flame. Exploding batteries can propel debris and chemicals.
- Do not open the battery – danger of short-circuiting and/or explosion.
- Do not attempt to destroy or disassemble the battery pack or remove any of its components.
- Do not touch the battery terminals with metal objects and/or body parts as short-circuit and/or personal injury may result.
- Explosion hazard – protect the battery against heat, for example, direct sunlight and fire. Do not store batteries in vehicles or locations subject to heat.
- Explosion hazard – do not open and/or short-circuit the battery.
- Poison hazard – battery leakage (liquid ejection). Under extreme conditions, liquid may be ejected from the battery – avoid contact. If contact accidentally occurs, immediately seek medical attention, and flush with water. If liquid contacts eyes, immediately seek medical attention, flush with clean water for at least 10 minutes. Liquid ejected from the battery may cause irritation or burns.
- Dispose of non-serviceable batteries in an environmentally responsible manner and according to local regulations.

Failure to adhere to the requirements above may result in the battery becoming inoperative or battery life being reduced. In extreme cases or abuse, battery overheating, or fire may result.

© GenPower

Maintenance

Regular maintenance helps ensure safe, economical and reliable operation. Perform each maintenance task at the specified operating hours or elapsed time, whichever occurs first.

WARNING: Switch off the generator, allow it to cool and disconnect the spark plug lead before performing maintenance.

Interval	Maintenance task
Before each use	Check the engine oil level. Inspect the air filter.
After the first 20 hours or first month	Replace the engine oil.
Every 50 hours or 3 months	Clean the air filter.*
Every 100 hours or 6 months	Replace the engine oil. Clean the fuel strainer bowl. Inspect and clean the spark plug.
Every 300 hours or 12 months	Replace the spark plug. Check and adjust the valve clearance.**
Every 300 hours	Clean the cylinder head and combustion chamber.**
Every 2 years	Clean the fuel tank and strainer. Replace the fuel hose.**

** Service the air filter more frequently when operating in dusty conditions.*

*** This maintenance must be performed by an authorised service agent appointed by the manufacturer.*

Replacing the Engine Oil

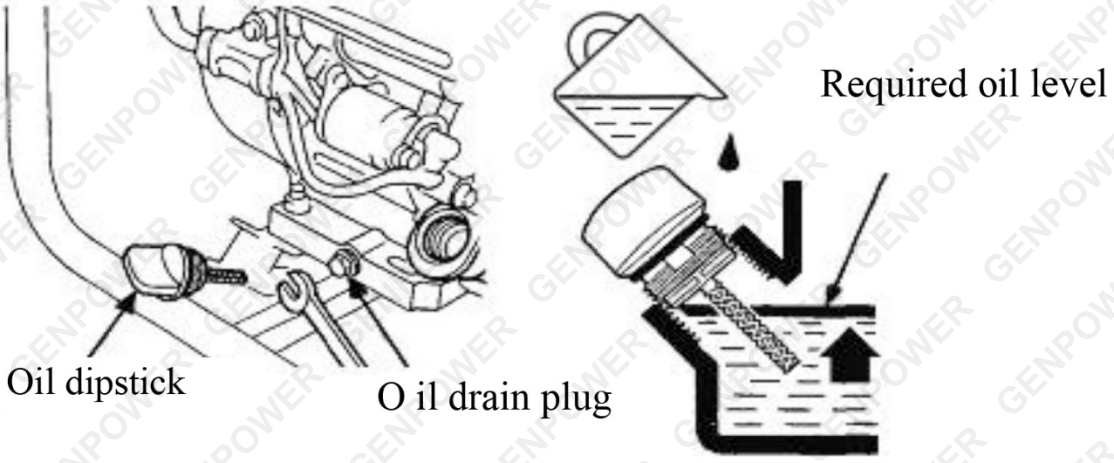

Cleaning the Air Filter

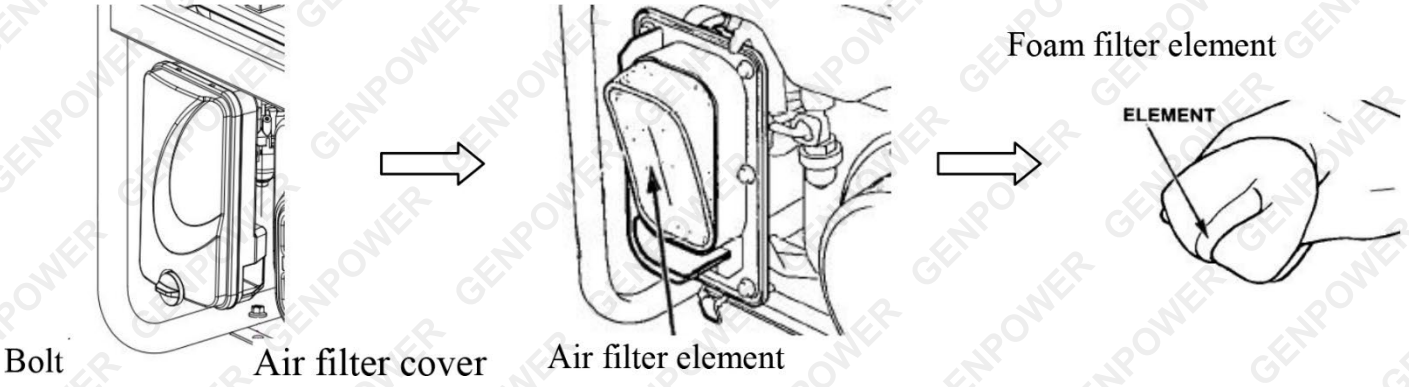

The reusable foam filter element can be washed and re-oiled.

1. Remove the retaining bolt and air filter cover.
2. Remove the foam filter element.
3. Wash the element in warm water with mild detergent.
4. Rinse thoroughly, then squeeze it in a clean cloth. Do not twist it.
5. Allow the element to dry completely.
6. Soak it in clean engine oil, then squeeze out the excess oil using a clean, dry cloth.
7. Refit the filter element, cover and retaining bolt securely.

IMPORTANT: Do not operate the generator without the air filter installed.

Cleaning the Fuel Sediment Cup

WARNING: Switch off the engine and allow it to cool. Work in a well-ventilated area away from flames, sparks and other ignition sources.

1. Turn the fuel valve to OFF.
2. Remove the sediment cup, O-ring and strainer.
3. Clean the sediment cup and strainer with an approved non-flammable solvent or high-flashpoint solvent.
4. Inspect the O-ring and replace it if damaged.
5. Refit the strainer, O-ring and sediment cup. Tighten the cup securely.
6. Turn the fuel valve to ON and check for leaks. Do not operate the generator if a leak is present.

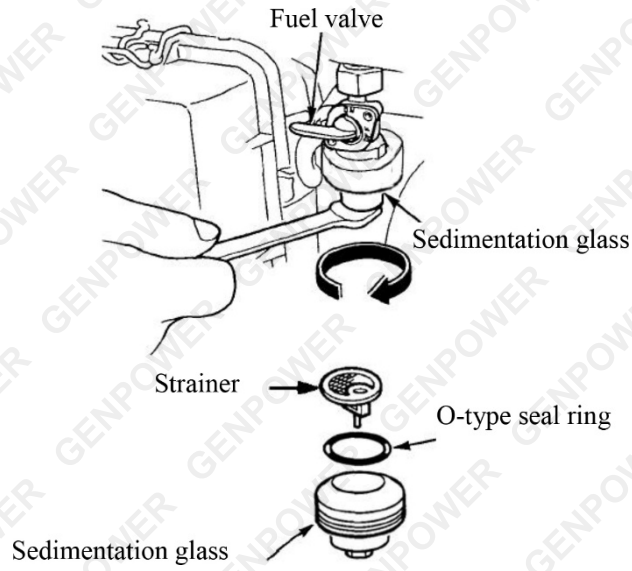

© GenPower

Inspecting and Cleaning the Spark Plug

Recommended spark plug: F7RTC

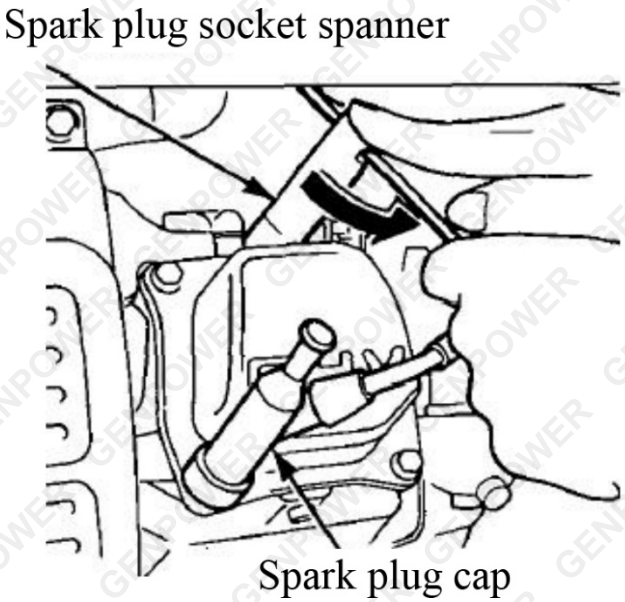

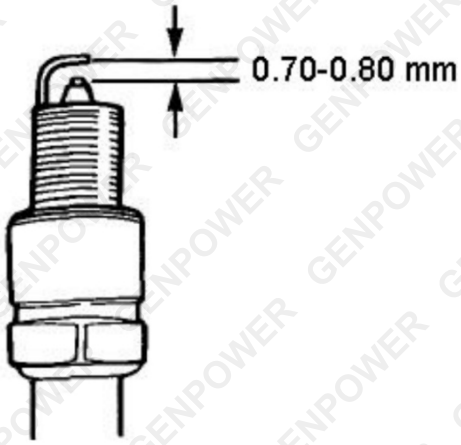

WARNING: Switch off the engine and allow it to cool before servicing the spark plug.

1. Remove the spark plug cap.
2. Clean around the base of the spark plug to prevent debris entering the cylinder.
3. Remove the spark plug using a spark plug socket spanner.
4. Inspect the insulator, electrodes and sealing washer. Replace the spark plug if it is damaged, heavily worn or cracked.
5. Remove light deposits with a suitable spark plug brush.
6. Measure the electrode gap with a feeler gauge. The correct gap is 0.70–0.80 mm.
7. Install the spark plug by hand to avoid cross-threading, then tighten it securely with the socket spanner.
8. Refit the spark plug cap firmly.

Valve Clearance

Valve-clearance inspection and adjustment must be performed on a cold engine by an authorised service agent appointed by the manufacturer.

- **Intake valve clearance: 0.10 mm**
- **Exhaust valve clearance: 0.15 mm**

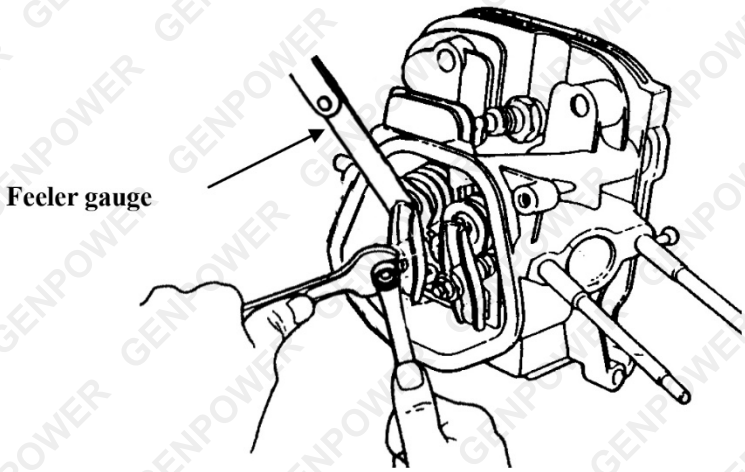

Troubleshooting

Fault	Possible cause	Corrective action
Engine will not start	Fuel tank is empty	Fill the fuel tank with petrol.
	Fuel valve is OFF	Turn the fuel valve to ON.
	Fuel valve or strainer is blocked	Clean the fuel sediment cup and strainer.
	Engine oil level is low	Add the correct engine oil to the specified level.
	Engine switch is OFF	Turn the engine switch to ON.
	Spark plug is dirty, damaged or worn	Clean or replace the spark plug.
No electrical output	AC circuit breaker is OFF or has tripped	Disconnect the loads, correct any overload, then reset the circuit breaker.
	Plug is not connected securely	Remove and securely reconnect the plug.
Engine runs unevenly	Choke lever is in the wrong position	Move the choke lever to RUN after the engine warms up.
White smoke	Engine is overheated or overloaded	Switch off the generator, allow it to cool and reduce the load. Check that ventilation openings are clear.
	Petrol is contaminated or stale	Drain it safely and refill with fresh, clean petrol.
Black smoke	Air filter is dirty	Clean the air filter element.
	Load is too high	Reduce the load to within the generator's rated output.
Blue smoke	Engine oil is overfilled	Drain the excess oil to the correct level.
	Incorrect engine oil is being used	Replace it with engine oil of the specified type and viscosity.
Reduced power	Spark plug is dirty, damaged or worn	Clean or replace the spark plug.
	Valve clearance is incorrect	Have an authorised service agent adjust the valve clearance.

IMPORTANT: If the fault persists, stop using the generator and contact an authorised service agent appointed by the manufacturer.

Operating Conditions

- Ambient temperature: −15°C to 40°C
- Relative humidity: below 95%
- Altitude: below 1,000 m above sea level

Rated output applies only under the specified operating conditions. At altitudes above 1,000 m, the generator's load may need to be reduced. Contact the manufacturer for the applicable derating requirements.

DANGER: Never operate the generator indoors or in an enclosed or poorly ventilated area, even at a reduced load.

Specifications

Power Type	Petrol
Peak Output	11,000 W (11 kW)
Continuous Rated Output	10,000 W (10 kW)
Fuel Capacity	36 L
Runtime	Up to 14 hours at 25% load; 9 hours at 50% load; 5 hours at 100% load
Engine Type	Single-cylinder, four-stroke, forced-air-cooled OHV
Engine Displacement	550 cc
Engine Output	14.2 kW (19 hp)
Oil Capacity	1.1 L
Noise Level	83 dB(A) at 50% load; 86.5 dB(A) at 100% load, measured at 7 m
Starting System	Electric key start
Power Outlets	1 × 32 A outlet and 2 × 15 A outlets
AC Output	240 V, 50 Hz
Alternator Type	Self-excited, two-pole, copper-wound alternator
Wheel Size	254 mm (10 inches)

© GenPower

Some experts believe that the incorrect or prolonged use of almost any product may cause serious injury or death. To help reduce your risk of serious injury or death, refer to the information below. For more information, see www.datastreamserver.com/safety

- Consult all documentation, packaging, and product labelling before use. Note that some products feature documentation available online. It is recommended to print and retain the documentation.
- Before each use, check the product for loose/broken/damaged/missing parts, wear, or leaks (if applicable). Never use a product with loose/broken/damaged/missing parts, wear, or leaks.
- Products must be inspected and serviced (if applicable) by a qualified technician every 6 months. This is based on average residential use by persons of average size and strength, and on a property of average metropolitan size. Use beyond these recommendations may require more frequent inspections/servicing.
- Ensure that all users of the product have completed a suitable industry recognised training course before being allowed access to the product.
- The product has been supplied by a general merchandise retailer that may not be familiar with your specific application or description of application. Be sure to attain third-party approval from a qualified specialist for your application before use, regardless of any assurances from the retailer or its representatives.
- This product is not intended for use where fail-safe operation is required. As with any product (for example, automobile, computer, toaster), there is the possibility of technical issues that may require the repair or replacement of parts, or the product itself. If the possibility of such failure and the associated time it may take to rectify could in any way inconvenience the user, business, or employee, or financially affect the user, business, or employee, then the product is not suitable for your requirements. This product is not intended for use where incorrect operation or a failure of any kind, including but not limited to, a condition requiring product return, replacement, parts replacement, or service by a technician may cause financial loss, loss of employee time or an inconvenience requiring compensation.
- If this product has been purchased in error when considering the information presented here, contact the retailer directly for details of their returns policy, if required.

edisons.com.au

© GenPower. All rights reserved. No part of this document, including descriptive content, concepts, ideas, diagrams, or images may be reproduced or transmitted in any form or by any means, electronic or mechanical, including photocopying, scanning, or recording, or any information storage and retrieval system, without express permission or consent from the publisher.