POWERED BY Wenoker

USER MANUAL

ROWING MACHINE

Model: RW702

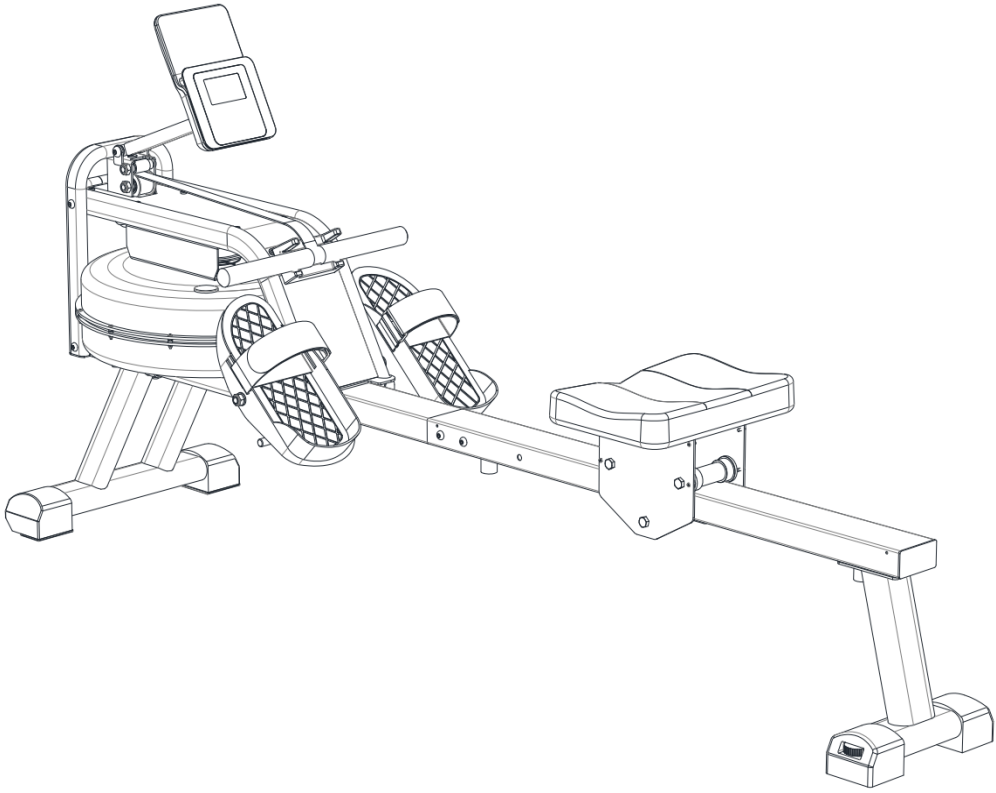

Questions or Concerns?

IMPORTANT!

Please read all details before use, and keep this user manual for future reference.

PLEASE CONTACT US BEFORE THE RETURN: Mon-Fri,9:00 am-5:00 pm PST/PDT

servicestar2024@outlook.com

Contents

Safety Instructions	002
Specification	006
Parts List	007
Explosion	008
Explosion List	009
Assembly Instruction	010
Water Injection and Managerment	012
Moving	014
Instruction of Monitor	015
APP Setup Instruction	017
Troubleshooting	018
Warm-up	019
Exercise Phase	020
Exercise Guide	021
Warranty Information	022

Hey!

Please register your warranty to keep yourself protected!



Email your item model to
servicestar2024@outlook.com

Safety Instructions

Please keep this instruction manual in a safe place for future reference.

- It is very important to read the instruction manual carefully before assembling and using the training equipment. Only with proper installation, maintenance and use of the training equipment can safe and effective training be achieved, and it is important to make sure that all users are familiar with all the warnings and precautions of the training equipment.
- Before using the training equipment, the user should consult a doctor about his/her physical condition to prevent safety accidents from occurring during the training process, so that the training cannot be carried out normally. If the user is undergoing treatment for a medical condition such as heart, blood pressure, cholesterol, etc., it is important to consult a physician prior to training.
- Always pay attention to the condition of your body when training, incorrect training methods may affect your health. If you have the following discomfort symptoms (including: headache, chest tightness, irregular heartbeat, shortness of breath, halo, dizziness and nausea, etc.), please stop the training immediately, and you must get a doctor's examination and confirmation in time, and you must get a doctor's permission before you can continue the training.
- Keep children and pets away from the training equipment, which is intended for adult use only.
- Place the training equipment on a hard, flat surface with a protective layer on the floor or carpet to prevent damage to the ground, and ensure that the perimeter of the training equipment is spaced at least 1.6ft/0.5m away from each obstacle.
- Before using the training equipment, please check all the bolts and nuts that need to be locked to ensure that they are locked and safe to use.
- Safe use of the training device can only be ensured by regular repair and maintenance of the parts that are susceptible to damage, wear and tear, and breakage.
- It must be ensured that the device is used in accordance with the guidelines in the instruction manual. When defective parts are found during assembly or servicing, or when abnormal noises are heard during use, stop operation and use immediately and ensure that all problems are resolved before proceeding. Ensure that all problems are solved before continuing.
- When using the training equipment, please pay attention to the dress, try to wear simple clothes, avoid wearing wide clothes, because wide clothes may be stuck in the equipment.

- This training device is not intended for medical use.
- When lifting or moving the device, do so in a safe manner and, if necessary, using proper handling methods, or with the assistance of others.
- When placing the training device in an upright position, always place it against a wall or in front of a fixed surface, and always place it in a safe position away from children to prevent injuries.
- Do not allow two or more people to use the equipment at the same time.
- The rower is a speed-related training device.
- This machine is only for home use, and the maximum load capacity of 160kg/353lbs.

Instructions for safe use
Maintenance

- The quality of the water in the tank requires maintenance in stages. We strongly recommend the use of regular municipal tap water, which contains the elements that make the water tank from corrosion by bacteria, algae, etc. Chlorine and other chemicals are present in the water tank.
- The chlorine in the tank must be renewed by means of purification tablets (or water bluer). Chlorine breaks down with light: in direct sunlight, chlorine decomposition time is about 3 months; under artificial lighting conditions, chlorine decomposes in about 2 years.
- If you notice that the water is starting to deteriorate, add a purification tablet (or water bluer) to the water tank immediately. If the water becomes cloudy, we recommend emptying the tank and rinsing it with clean water. Refilling it with clean tap water and adding a purification tablet.
- Do not add chlorine bleach to the water tank as this can cause irreparable damage to the tank which is made of polycarbonate material.
- In order to maintain the beauty and integrity of your rower, it is essential to consistently clean the equipment, please clean the exterior of the machine promptly of any dust. The track surface must be kept clean to avoid dust clogging the seat rollers. Track surfaces can be cleaned with a damp cloth. The surface of the water tank can also be cleaned. but be sure to read the instructions for the cleaner beforehand. Do not use cleaning agents containing chlorates or ammonia.

- Ropes, pulleys and connecting points are wearing parts and should be inspected regularly and replaced when they are worn out to ensure normal and safe use. safe use.
- When the parts of the rower are damaged, they should be replaced immediately.

Precautions

- Testing and precautions before use.
- **Slides:** Before sitting on the rower, inspect the seat wheels and slides for dirt and debris. Small objects will obstruct the seat wheels and slide rails and damage their surfaces.
- **Fasteners:** The frame bolts need to be checked regularly for tightness. They should be checked at the end of the first month of use and every 12 months.
- When storing your rower vertically, choose a suitable location.
- Choose a flat surface to use your rower on to avoid rocking and premature wear.

Warnings

- Consult your physician before beginning any exercise. For individuals over 35 years of age or with pre-existing health problems, it is especially important. Read all instructions before using any equipment.

CE	This symbol stands for " Conformité Européene ", which means " Conformity with EU directives". With the CE-marking the manufacturer confirms that this product complies with applicable European directives and regulations.
UK CA	This symbol stands for "UK Conformity Assessed", which means "Conformity with British Standards11. With the UKCA-marking the manufacturer confirms that this product complies with applicable British Standards.

SIMPLIFIED EU DECLARATION OF CONFORMITY

- Hereby, XIAMEN DERBY HEALTH TECHNOLOGY CO.LTD. declares that the fitness equipment RW623-50 is in compliance with Directive 2014/53/EU.
- The full text of the EU declaration of conformity is available at the following email address:
  servicestar2024@outlook.com

NOTES ON DISPOSAL



Packaging materials are raw materials and can be recycled. Separate the packaging materials correctly and dispose of them properly in the interest of the environment.

Your local administration can provide additional information.



Used devices do not belong in household waste!

Dispose of used devices properly! Doing so helps fulfill our responsibility to protect the environment.Your local administration can provide information on collection points and opening hours.



Batteries do not belong in household waste!

As the end user, you are legally required to return discharged batteries to a collection point. You can take your old batteries to the public collection points in your community, or you can take them to any place where batteries of that type are being sold.

Specification

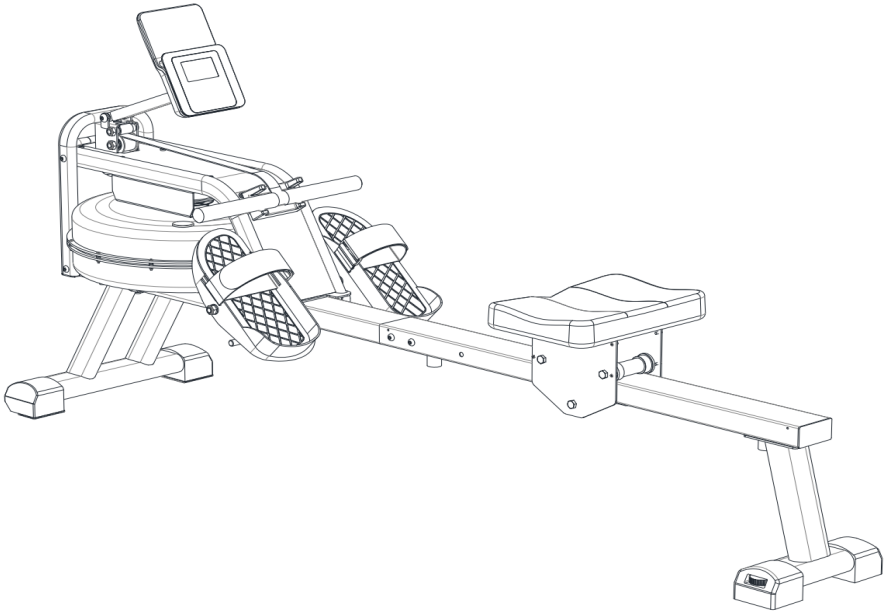

Model:	RW702
Name:	Wenoker Rowing Machine
Power:	AAA Battery x 2
Max Load:	352 lbs(160kg)
Product Dimensions:	72.64*17.32*33.46 inch(1845*440*850 mm)
Net Weight:	52.0 bs(26.2 kg)

Parts List

Be sure to check that each part and accessory is complete.

A:Main Frame

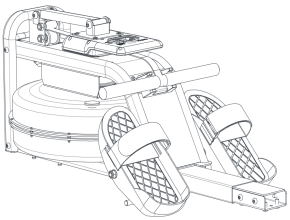

B: Front Rail assembly

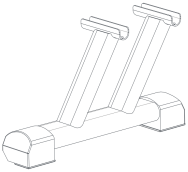

C: Rear Rail assembly

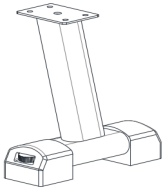

D:Seat group

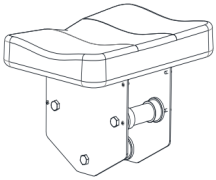

E:Buffer cushion



F: Screw kit

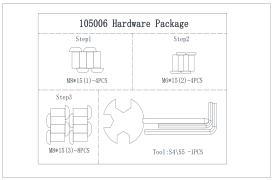

G:Manual

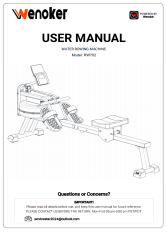

H: Water purification tablets

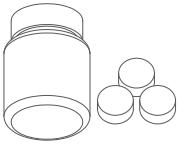

I: Rail connection plate

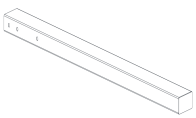

J: Water pump



Explosion

Be sure to check that each part and accessory is complete.

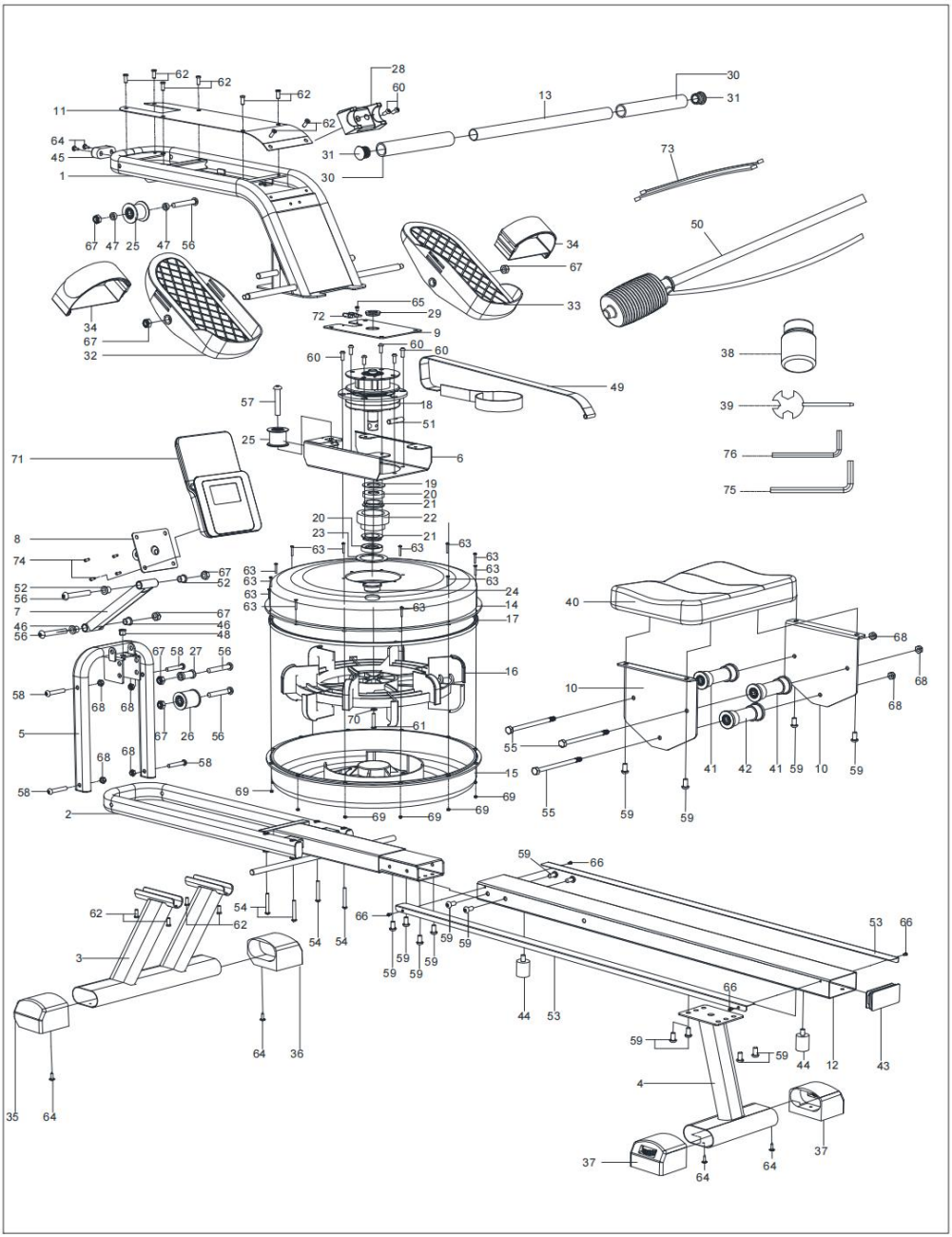

Explosion List

Be sure to check that each part and accessory is complete.

NO.	Name	Specification	Q'ty	NO.	Name	Specification	Q'ty
1	Main Frame	Assembly	1	39	Cross spanner	Cross 13 14 17	1
2	Chassis assembly	Assembly	1	40	Seat cushion	PU /320*260*52	1
3	Front Tube assembly	Assembly	1	41	Seat cushion wheel set	Nylon/ φ38*φ33*91.4	2
4	Back Tube assembly	Assembly	1	42	Seat cushion rollers	Nylon/ φ42*φ33*91.4	1
5	Front U Tube assembly	Assembly	1	43	Plugs	PP/ 40*80	2
6	Water Tank Fixed assembly	Assembly	1	44	buffer cushion	rubber/ φ25*32*M8	2
7	Monitor Support Base	Assembly	1	45	Front footrest	rubber/53*23*20	1
8	Monitor Display	Assembly	1	46	Plastic bushing	PP/ φ18*φ10.2*13	2
9	Fixed Board	δ2	1	47	PVC Tube 5	φ 16*φ10.2*4.5	2
10	Seat support Board	δ3	2	48	fipple	φ 14.5*φ12*φ4*12	1
11	Decorative cover plate	δ 1.5	1	49	Webbing	25*3100	1
12	Short orbital tube	40*80	1	50	Water pump	PE/570 White+Red	2
13	Handle Tube	Q235/ φ25*390	1	51	Retaining pin	SUS304/ φ10*40	1
14	Tank top cover	PC/ φ445*69.5	1	52	Powdered bushing	φ 18*φ14*φ10*10	2
15	Tank Lower Cover	PC/ φ445*69.5	1	53	Aluminium sidebar	AL6061/946*27*15* δ2.0	2
16	Pulp No. 2	ABS/ φ330*106	1	54	Hexagonal bolt	M6×45×10×S10	4
17	Water Tank Seal	Silicone/ φ430*7	1	55	Hexagonal bolt	M8×120x20×S14	3
18	Rotary assembly	Nylon/ φ140*134	1	56	Screws	M10×65×15×S6	5
19	Rubber washers 2	Silicone/ φ42*φ25* δ2	1	57	Screws	M10×55×15×S6	1
20	TC Skeleton Oil Seal	NBR/ φ20*φ40*8	2	58	Screws	M8*50×S5	4
21	Rubber washers	Silicone/ φ40*7	2	59	Screws	M8×15×S5	16
22	Seal Retainer	Nylon/ φ60*φ45*32	1	60	Screws	M6×15×S5	12
23	Rubber Sealing washers	Silicone/ φ60*φ45* δ 1	1	61	Screws	SU304/M6×30×S5	1
24	Tank Port Plugs	Silicone/ φ31.3*10.4	1	62	Screws	M6×15×S5	12
25	Small webbing wheel	POM/ φ51*φ38*32	2	63	Screws	M3x17xΦ6	12
26	Small webbing wheel 1	POM/ φ41*φ34*35	1	64	Screws	ST4.2x19xΦ 11	6
27	Roller	POM/ φ19*φ10.3*32.5	1	65	Screws	M4x6xΦ7	1
28	Handlebar Mount	ABS/96*54*40	1	66	Screws	M4x4xΦ7	4
29	Spindle bushing	POM/ φ30*φ17*15	1	67	Nylon Nut	M10x1.25xH12xS17	7
30	Grip	φ30*3*180	2	68	Nylon Nut	M8xH7.5xS13	7
31	25 Semi-circular stopper	PP/配 25*1.5	2	69	Nylon Nut	M3xH3.8xS6	12
32	Left pedal	PP/305*125*85	1	70	Flat washer	SU304/d6×Φ 16×1	1
33	Right pedal	PP/305*125*85	1	71	Monitor	B31320	1
34	38 Wide straps	Nylon webbing/38*800	2	72	Sensor wire	Cable 200mm	2
35	Front Adjustable Foot Rest Left	PP/ 40*80	1	73	Monitor centre line	Cable 400mm	2
36	Front Adjustable Foot Rest Right	PP/ 40*80	1	74	Screws	M4x6xΦ7	4
37	Rear Adjustable Foot Rest	PP/ 40*80	2	75	Allen spanner S5	30*80*5 S5	1
38	Water purification film	φ30*3	1	76	Allen spanner S4	25*60*4 S4	1

Tips | Scan QR code to get installation video

Preparation:

1. Before installation, please confirm that there is sufficient space around the site.
2. Please use the tools provided with the vehicle or your own special tools for installation.
3. Before installation, confirm that all components are complete.

Step 1A

1)Take out the bolts-M8*15(1)from the card board，and insert the Rear Rail assembly(D) into the Rail connecting plate(B);
2)Then attach the Buffer cushion(H)into the Rail connecting plate(B);

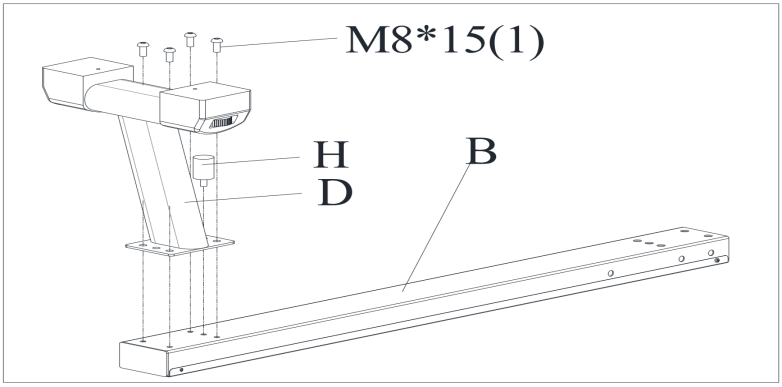

Step 1B

Install the seat(E)into the Rail connecting plate(B);

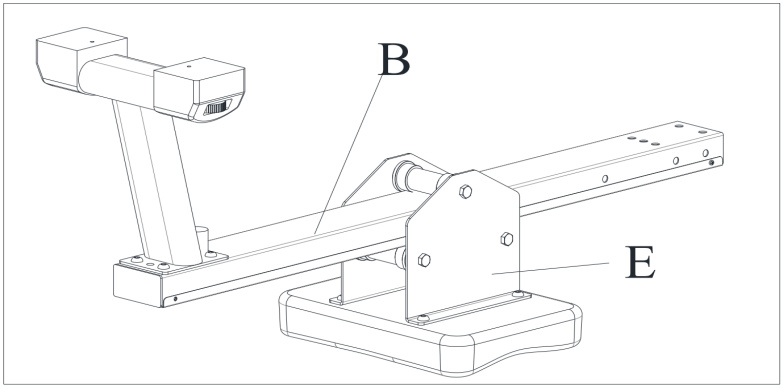

Step 2

Use the M6*15(2) bolts to lock the Front Rail assembly(C)into the Main Frame(A);

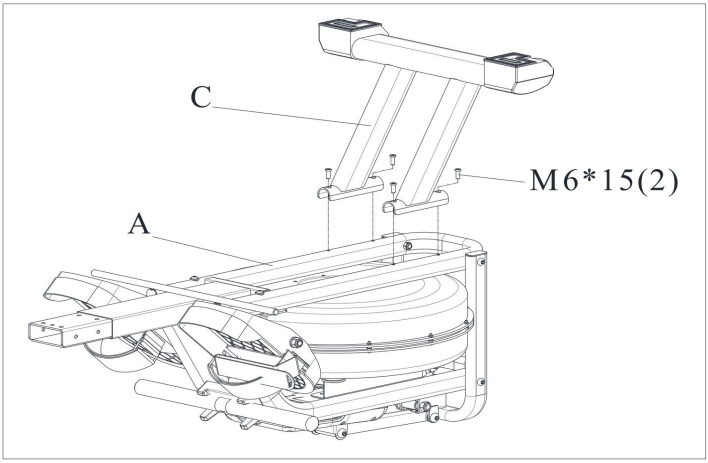

Step 3

1)Use the M8*15(3)bolts install the Assembled rail assembly previously into the Main Frame(A);
2)Then attach the Buffer cushion(H) into the Rail connecting plate(B);

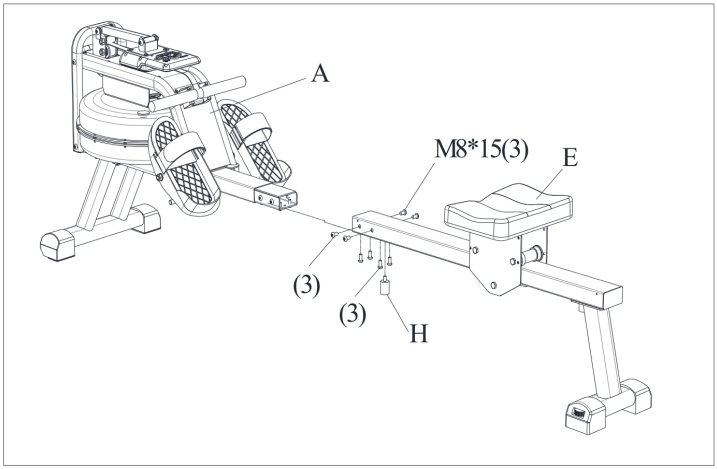

Water Injection and Management

1. Water injection

NOTE: When filling with water, use a dry cloth under the tank to prevent wetting floors and carpets.

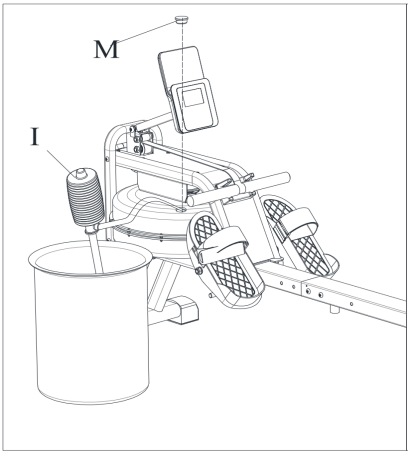

Steps:

1) Remove the Tank Plug (M) on the tank.

2) Inject water following Fig:

①Place a large bucket of water next to the rowing machine and insert the water pump(C) spout into the tank and the bottom hose into the tank.

②Start the motorized water pump (I) to start filling up water.

③Check the amount of water filled by the water level scale on the side of the water tank.

Caution! Do not over!

④Turn off the pump after filling water to the desired level.

⑤ Make sure that the tank plug has been re-plugged.

Note: If the local water quality is bad, it is recommended to use distilled water instead of tap water.

2. Regular water replacement

Note: In case of water discoloration or bacterial or algal bloom, please change the water source in time.

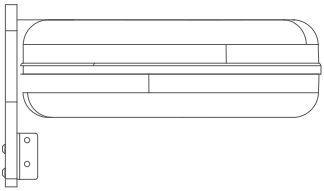

3. Water replacement

NOTE: When filling with water, use a dry cloth pad under the tank to prevent wetting floors and carpets.

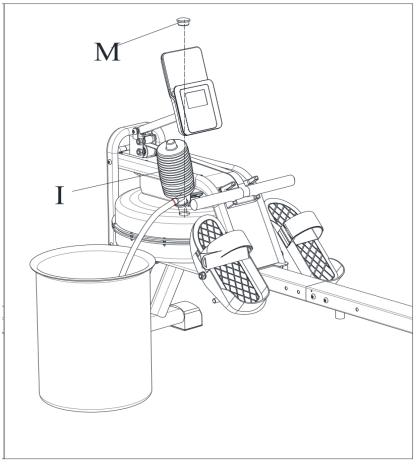

STEPS

1) Remove the water tank plug(M).

2)Replace water following Fig:

Insert the hose at the bottom of the water pump(I) into the water tank of the rower, and the outlet of the water pump(I) into the water bucket.

3)Turn on the water pump(I) to drain the water.

NOTE: When using the water pump, please plug in the power supply and press the top switch button to ensure proper drainage.

Water Level Marker

The resistance depends on the amount of water in the tank, please fill the water according to the water level mark.
Do not exceed this water level mark.
If water is added above the maximum water level, damage to the product will not be covered by the warranty.

Caution

Refill the water purification tablets every 3 months or as needed. If the water quality has become very turbid, replace the water in the water tank.
2)The water replaced in the tank is not suitable for re-use and should be disposed of as waste water.
3)If the water tank is not used for a long period of time, please empty the water tank.

Moving

1)When storing the product,firstly move the seat assembly (E) to the front limit switches (H)；

2)Then lift the footplate by hand until the rolling wheels at the front end of the track touch the ground and then you can move the machine to where you want to place it as you wish.

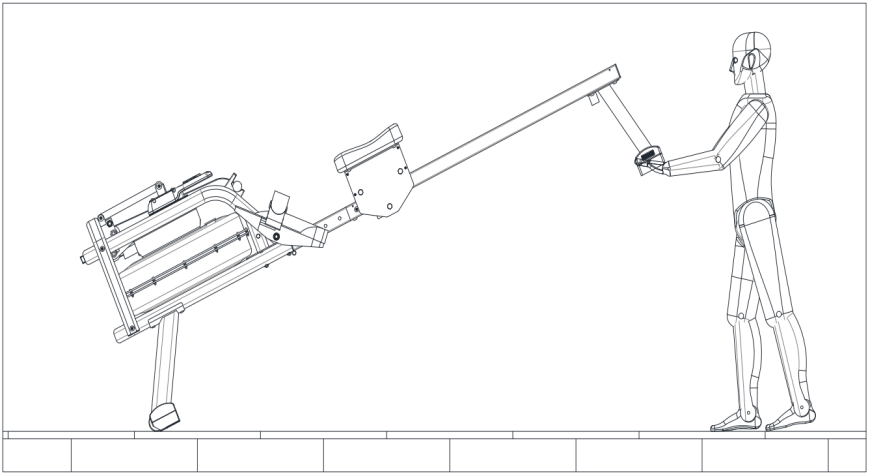

BUTTONS

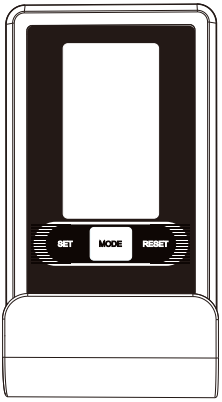

1. MODE
Press this button to changeover display time time, calories, total strokes, distance and total distance(ODO).
2. SET
In setting status, press this button and changeover choose the “MODE” button to increase setting value in relevant flashing window for TIME, DIST and CAL..
3. RESET
In setting status, press this button to reset the value in relevant flashing window for TIME, DIST and CAL.
In monitor status, hold this button for 3 seconds to reset all values to zero.

FUNCTIONS

1. SCAN
In scanning mode, the time, calories, counts, distance, total counts, and the 5 statuses are displayed in a cyclic sequence every 4 seconds.
2. COUNT
Display instantaneous Counts and the range is 0~9999 Counts.
3. TMR
Count the total time from exercise start to the end and the range is 0:00 ~ 99:59 Minute
4. DST
Count the total distance from exercise start to the end and the range is 0.0 ~ 9999KM OR Mile.
5. CAL
Count the total calories consumed from exercise start to the end and the range is 0.0 ~ 9999 KCAL
6. TCNT
Count the total strokes after installing the batteries
7. AUTO START/STOP
1)Without any signal of exercise or operation for 4minutes, the power will turn off automatically.
2)Once receive exercise or operation signal, the monitor will turn on automatically.

SETTING:

Press MODE to choose the display window that needs to be pre-set, and the value in relevant window will flash. Then press SET to increase the value to reach your want alarm time, alarm distance or alarm calorie. Hold SET to increase the value rapidly.Press RESET to reset value in relevant flashing window.

FunctionScope	ScanTime	4Seconds
	TMR	0:00~99minute:59seconds
	COUNT	0-9999Counts
	DST	0~999.9Kilometre
	CAL	0~9999Kilocalorie
	TCNT	0~9999Counts
Battery		AAABatteryx2
OperatingTemperatureRange		32℉~104℉
Storagetemperaturerange		14℉~168℉

Note:

1.During motion execution, after 4 minutes without pressing any button, RPM signal or heartbeat signal input, the buzzer will sound for 0.5 seconds to enter standby.
2.When the display becomes dim or illegible, remove the battery and replace with SIZE AAA UM4 R03
3.When there is no signal input, check that the connection cable is connected.

BATTERY REPLACE

When the display becomes dim or illegible, remove the battery and replace it with SIZE AAA UM4 R03.

APP Setup Instruction

Download and Use of KINOMAP

App Store

Google Play

Search, download & install Kinomap over Apple Store or Google Play depending on your smartphone system.

【1】Enter Kinomap to select [More] page;
【2】Select to add more fitness equipment;
【3】Select and click Rowing machine icon;
【4】Tap FiteShow entrance;
【5】Tap the matching devices like 'SPAX-RW-XXXX' (X means random digit) to pair;
【6】Find related videos to start your favorite running mode.

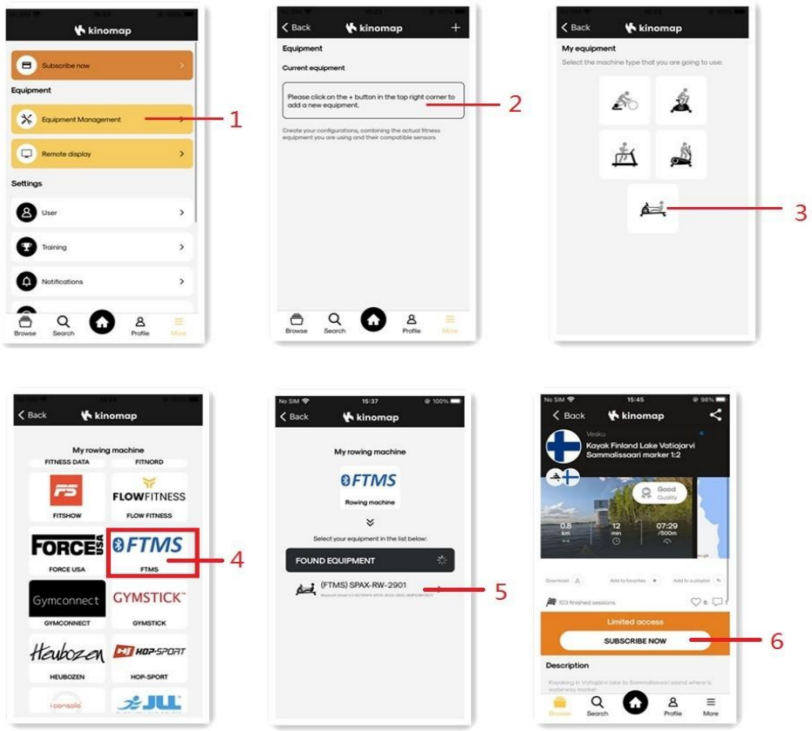

Troubleshooting

Questions	Possible solutions
What should be done when there is noise in rowing?	You can apply some car polishing wax on belt.
What should be done when the rower can not be connectted to the APP?	Check whether other members are connected to Bluetooth at the same time. If so, unbind and reconnect.
	The rowing machine is still malfunctioning. Please contact Customer Support (see page 23).
What should be done when the water discolors or becomes muddy?	Change the placement location of the rowing machine to reduce the direct solar radiation.
	Change the water or conduct water treatment pursuant to the description of the manual. Consider the use of distilled water for water injection anew.

Warm-up

Do stretches before exercising. Warm muscles are easier to stretch, so start with a 5-10 minute warm-up, then do some stretches shown below - 5 times, 10 seconds or more per leg. Do it again after the workout.

1. Stretch down

Bend your knees slightly, slowly bend your body forward, relax your back and shoulders, and try to touch your toes with your hands. Hold for 10-15 seconds, then relax.
Repeat 3 times (see Figure 1).



2. Seated hamstring stretch

Sit with one leg straight. Bring the other leg in so that it is snug on the inside of the straightened leg. Try to touch your feet with your hand's toe. Hold for 10-15 seconds, then relax.
Repeat 3 times for each leg (see Figure 2).



3. Calf and Achilles tendon stretch

Stand with both hands against the wall or a tree, put one foot behind another. Keep the back leg straight and your heel on the ground, lean toward a wall or a tree. Hold for 10-15 seconds, then relax. Repeat 3 times for each leg (see Figure 3).

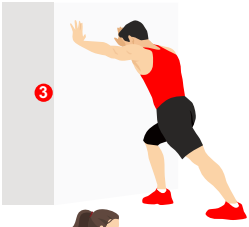

4. Quadriceps stretch

Reach back with your right hand, grab your right foot and slowly pull it toward your hips until you feel the muscles in the front of your thigh tense.Hold for 10-15 seconds, then relax.
Repeat 3 times for each leg (see Figure4).



5. Sartorius (inner thigh muscle) stretch

Sit with your feet facing each other and your knees facing out. Grab your feet with both hands and pull toward your groin.
Hold for 10-15 seconds, then relax.
Repeat 3 times(see Figure5).



Note: This machine is full body training equipment, please follow the above steps to warm up.

This is the stage where you put the effort in. After regular use, the muscles in your legs will become stronger. It is important to maintain a steady tempo throughout. The rate of work should be sufficient to raise your heart beat into the target zone shown on the graph below.

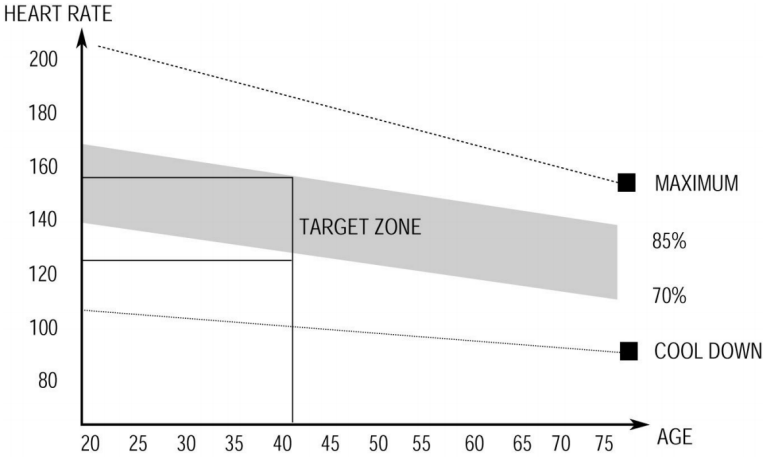

This stage should last for a minimum of 12 minutes for most people.

The Cool Down Phase

This stage is to let your cardio-vascular system and muscles wind down. This is a repeat of the warm up exercise e.g. reduce your tempo, continue for approximately 5 minutes. The stretching exercises should be repeated remembering not to force or jerk your muscles into the stretch. As you get fitter you may wish to train longer and harder. It is advisable to train at least three times a week, and if possible, space your workouts evenly throughout the week.

Muscle Toning

To tone muscle while on your trainer you will need to have the resistance set quite high. This will put more strain on our leg muscles and may mean you cannot train for as long as you would like. If you are also trying to improve your fitness you need to alter your training program. You should train as normal during the warm up and cool down phases, but towards the end of the exercise phase you should increase resistance, making your legs work harder than normal. You may have to reduce your speed to keep your heart rate in the target zone.

Calorie Burning

The important factor here is the amount of effort you put in. The harder and longer you work the more calories you will burn. Effectively this is the same as if you were training to improve your fitness, the difference is the goal.

1.Ready Status

Arms straight ahead, shoulders relaxed, head up, eyes forward, feet and calves compressed vertically.

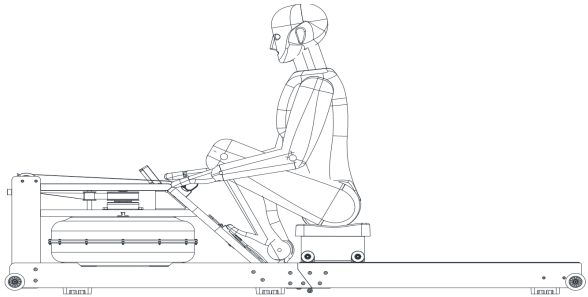

2. During sliding

Grab your arms with your hands and keep your body in the correct position and angle, slowly open your legs and board your legs forward.

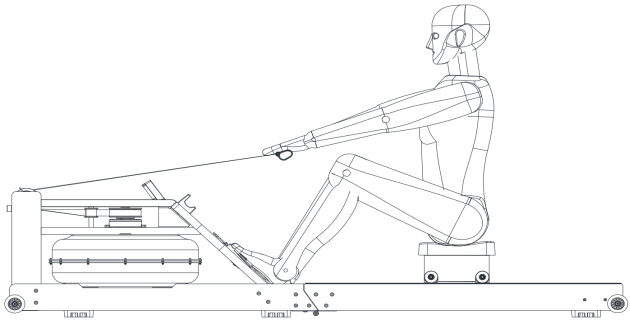

3. Back to the position

Straighten your legs forwards, pull the handles to your chest, relax your shoulders and look forward with your eyes. After a few phases of rowing practice on your own, mastering the correct rowing position and the rhythm of the rowing motion, the technique will be easier compared to normal rowing and you will soon experience the benefits of rowing machine training.

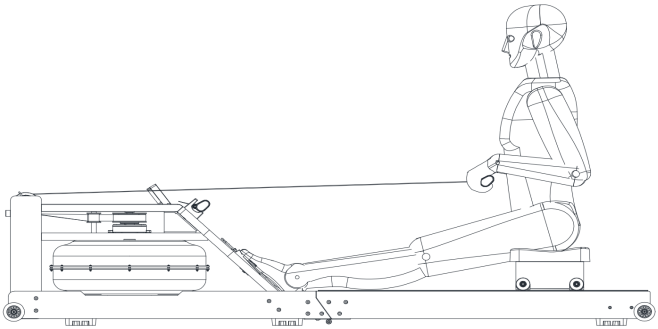

Warranty Information

Product Name	Water Rowing Machine
Model	RW702
Default Warranty Period	12 Months
For your own reference, we strongly recommend that you record your order number and date of purchase.	
Date of Purchase	
Serial Number	

Terms & Policy

The Wenoker products are premium in material, craftsmanship, and service. Wenoker 1-year limited warranty is effective from the date of purchase.
Wenoker will replace defective products based on eligibility. Refunds are available to the original purchasers of our products within the first 30 days of purchase. This warranty extends only to personal use, doesn't apply to the commercial, rental, or any other uses for which the product is not intended for. There are no warranties other than the warranties expressly set forth with each product.

This warranty is non-transferable. Wenoker is not responsible for any damages, losses or inconveniences caused by equipment's failure, user's negligence, user's abuse, or improper operation that does not follow the included user manual.

This warranty does not apply to the following situations:

- Damage due to abuse, accident, alteration or vandalism.
- Improper or inadequate maintenance.
- Damage in return transit.
- Unsupervised use by children under 18 years old.

Wenoker and its subsidiaries are only responsible for damages caused by the intended use or as instructed in the user manual. Some states do not allow this exclusion or limitation of incidental or consequential losses, so the above disclaimer may not apply to you. This warranty gives you specific legal rights and you may also have other rights, which may vary from state to state.

All expressed and implied warranties, including the warranty of merchantability, are limited to the period of the limited warranty.

Warranty Information

Additional 12-month Warranty:

You can enjoy an additional 12-month warranty. Just active your warranty by sending the product's model name your order number via ***servicestar2024@outlook.com***, to register your new product for the extended warranty.

Defective Products & Returns:

Should your product prove defective within the specified warranty period, please contact the Customer Support via ***servicestar2024@outlook.com*** with your invoice and order number. ***DO NOT*** dispose of your product before contacting us. Once our Customer Support team has approved your request, please return the product with a copy of your invoice and order number.

Customer Support

Your satisfaction is our goal! Should you encounter any issues or have any questions about your new product, feel free to contact our Customer Support Team via ***servicestar2024@outlook.com***

*** Please have your Order ID and serial number (usually on the rear foot pipe) ready before contacting Customer Support.**

EC REP

Company: XDH Tech
Address: 2 Rue Coysevox Bureau 3
Lyon, 69001,France
E-mail: xdh.tech@outlook.com
TEL.: 00330652768898
Name: Dinghao Xue

EC REP

Company:
KOVA ASSOCIATES LTD
Address:
72a Kingston Road.Portsmouth,
Hampshire,PO2 7PA, United
Kingdom

Manufacturer: XIAMEN DERBY HEALTH TECHNOLOGY CO.LTD.

Address: Factory building, 3/F, No. 133, Tongji North Road, Tong 'an District, Xiamen, Fujian China

Warning:
Changes or modifications to this unit not expressly approved by the party responsible for compliance could void the user's authority to operate the equipment.

NOTE: This device complies with part 15 of the FCC Rules. Operation is subject to the following two conditions:
(1) This device may not cause harmful interference, and
(2) this device must accept any interference received, including interference that may cause undesired operation.

FCC Statement:
This equipment has been tested and found to comply with the limits for a Class B digital device, pursuant to part 15 of the FCC Rules. These limits are designed to provide reasonable protection against harmful interference in a residential installation. This equipment generates, uses and can radiate radio frequency energy and, if not installed and used in accordance with the instructions, may cause harmful interference to radio communications. However, there is no guarantee that interference will not occur in a particular installation.
If this equipment does cause harmful interference to radio or television reception, which can be determined by turning the equipment off and on, the user is encouraged to try to correct the interference by one or more of the following measures:
–Reorient or relocate the receiving antenna.
–Increase the separation between the equipment and receiver.
–Connect the equipment into an outlet on a circuit different from that to which the receiver is connected.
–Consult the dealer or an experienced radio/TV technician for help.

RF exposure compliance statement:
This device has been evaluated to meet the general RF exposure requirement

This equipment should be installed and operated with minimum distance 20cm between the radiator and your body.



Made in China