Form No. 3442-884 Rev A

Jack Mount Kit

Z Master® 4000 Series Riding Mower

Model No. 144-2676

Installation Instructions

Safety

Safety and Instructional Decals

Safety decals and instructions are easily visible to the operator and are located near any area of potential danger. Replace any decal that is damaged or missing.

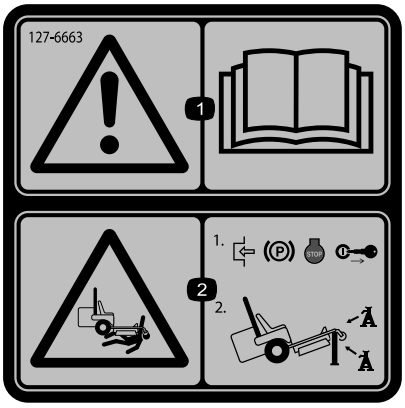

decal127-6663

127-6663

1. Warning—read the *Operator's Manual*.
2. Crushing hazard—engage the parking brake, shut off the engine, and remove the key; support the machine using jackstands.

© 2020—The Toro® Company
8111 Lyndale Avenue South
Bloomington, MN 55420

Register at www.Toro.com.

CE

Original Instructions (EN)
Printed in the USA
All Rights Reserved

3442-884

Installation

Loose Parts

Use the chart below to verify that all parts have been shipped.

Description	Qty.	Use
No parts required	–	Prepare the machine.
Jack mount Carriage bolt (3/8 x 1 inch) Locknut (3/8 inch)	1 2 2	Install the jack mount.

Note: Note: Determine the left and right sides of the machine from the normal operating position.

Preparing the Machine

1. Park the machine on a level surface.
2. Disengage the blade-control switch.
3. Move the motion-control levers outward to the NEUTRAL-LOCK position.
4. Engage the parking brake.
5. Shut off the engine and remove the key.

Installing the Jack Mount

If you have the Bagger Kit installed, you need to install the jack mount on the right side of the frame (Figure 1).

1. Align the holes in the jack mount with the holes in the front of the frame (Figure 1).
2. Secure the jack mount to the front and underside of the frame using 2 carriage bolts (3/8 x 1 inch) and 2 locknuts (3/8 inch) as shown in Figure 1.

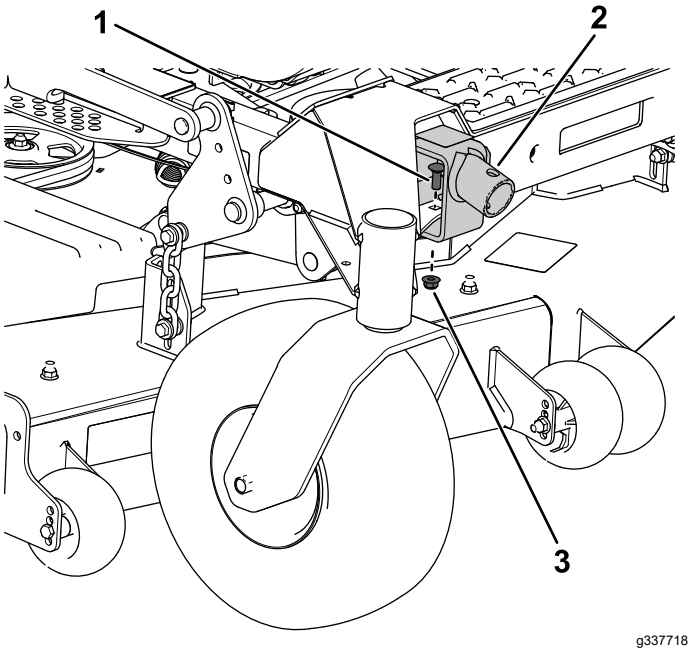

Figure 1

1. Carriage bolt (3/8 x 1 inch)
2. Jack mount
3. Locknut (3/8 inch)

3. Torque the 2 locknuts (3/8 inch) to 37 to 45 N·m (27 to 33 ft-lb).

Operation

Using the Jack Mount

⚠ WARNING

The machine could fall onto someone and cause serious injury or death.

- **Do not keep the machine raised on the jack for extended periods of time.**
- **Always use a jack on a level surface.**
- **Ensure that the jack is secured properly to the jack mount using a jack pin.**
- **Do not rely solely on the jack for support. Use adequate jack stands or equivalent support.**
- **Do not mount or dismount the mower while the jack is raised.**
- **Before each use, ensure that the jack and jack mount work properly and that there are no signs of damage.**

Note: Use only a manufacturer-approved jack rated at 907 kg (2,000 lb) or higher lift capacity with the jack mount.

1. Park the machine on a level surface, disengage the blade-control switch, move the motion-control levers outward to the NEUTRAL-LOCK position, and engage the parking brake.
2. Shut off the engine, remove the key, and wait for all moving parts to stop before leaving the operating position.
3. Raise the mower deck to the TRANSPORT position.
4. Attach the jack to the jack mount using a jack pin (Figure 2).

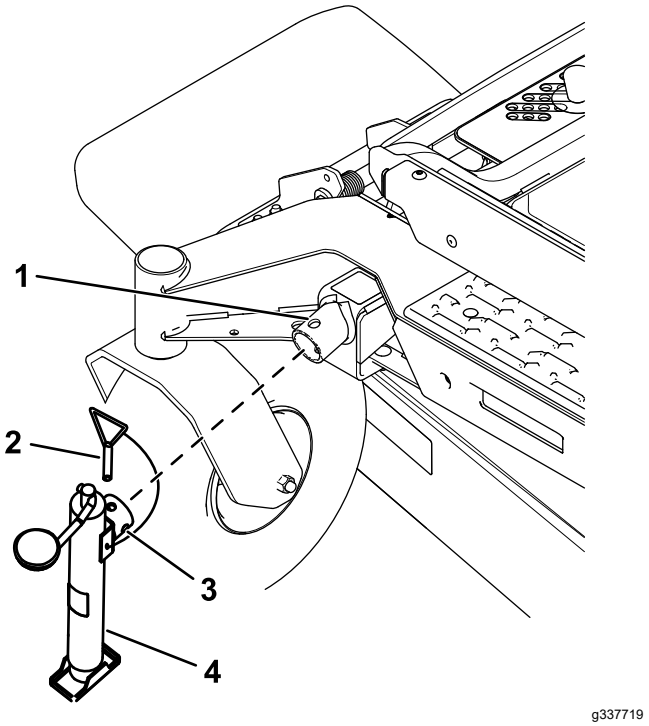

Figure 2

1. Jack mount
2. Jack pin
3. Jack tube
4. Jack

5. Use the jack to raise the machine to the desired height.

⚠ WARNING

Raising the machine could cause a fuel leak. Fuel is extremely flammable and highly explosive.

- **Check for any fuel leaks before performing maintenance.**
- **If you see a fuel leak, immediately lower the machine, drain the fuel, and wipe up the spill.**

6. Support the machine with jack stands; refer to the machine *Operator's Manual* for jack stand placement.
7. When finished, use the jack to lower the machine, then remove the jack.

Note: Do not operate the machine with the jack attached.