ENGLISH

FORNO®
Commerciale



FORNO COMMERCIALE 36" GAS SALAMANDER

FCMGS0114-36

SANITATION C US

ANSI Z83.11 • CSA 1.8-(2016) Food Service Equip.
Conforms to ANSI STD Z83.11-2016
Certified to CSA STD 1.8-2016 Food Service Equip.
CONFORMS TO NSF/ANSI 4:2020

INSTRUCTION MANUAL

Read these instructions carefully before using your appliance, and keep it carefully.
If you follow the instructions, your appliance will provide you with many years of good service.

08/2026

TABLE OF CONTENTS

Customer Care	4
Installation and Operation	6
Conversion to LP gas orifice	11
Warranty	12

Customer Care

Thank you for purchasing a Forno product. Please read the entire instruction manual before operating your new appliance for the first time. Whether you are an occasional user or an expert, it will be beneficial to familiarize yourself with the safety practices, features, operation and care recommendations of your appliance.

Both the model and serial number are listed inside the product. For warranty purposes, you will also need the date of purchase .

Record this information below for future reference.

Product Information Service Information

Model Number : _____

Serial Number :

Date of Purchase :_____

Purchase Address And Phone:

_____

_____

_____

Service Information

Use these numbers in any correspondence or services calls concerning your product.

If you received a damaged product, immediately contact Forno.

To save time and money, before you call for serviced, check the troubleshooting guide. It listed the causes of minor operation problems that you can correct yourself.

“Need some quick help? Simply scan the qr code and get access to our fast support form. We’re always here to assist you with any questions or concerns you may have. So, don’t hesitate to reach out!”

Services in Canada and Untied States

Keep the instruction manual handy to answer your questions. If you don’t understand something or need more assistance, please visit our website for fast support. Please provide us your name, number, address,serial number of the product that troubleshooting, proof of purchase, and a short description of the issue. A customer service representative will contact you as soon as possible. All warranty work needs to be authorized by FORNO customer service. All our authorized service providers are carefully selected and rigorously trained by us.

IMPORTANT FOR YOUR SAFETY

THIS MANUAL HAS BEEN PREPARED FOR PERSONNEL QUALIFIED TO INSTALL GAS EQUIPMENT,WHO SHOULD PERFORM THE INITIAL FIELD START-UP AND ADJUSTMENTS OF THE EQUIPMENT COVERED BY THIS MANUAL.

POST IN A PROMINENT LOCATION THE INSTRUCTIONS TO BE FOLLOWED IN THE EVE NT THE SMELL OF GAS IS DETECTED. THIS INFORMATION CAN BE OBTAINED FROM THE LOCAL GAS SUPPLIER.

IMPORTANT

IN THE EVENT A GAS ODOR IS DETECTED, SHUT DOWN UNITS AT MAINSHUTOFF VALVE AND CONTACT THE LOCAL GAS COMPANY OR GAS SUPPLIER FOR SERVICE.

FOR YOUR SAFETY

DO NOT STORE OR USE GASOLINE OR OTHER FLAMMABLE VAPORS OR LIQUIDS IN THE VICINITY OF THIS OR ANY OTHER APPLIANCE,

WARNING

improper installation,adjustment,alteration,service or maintenance can cause property damage, injury, or death. Read the installation,operating and maintenance instructions thoroughly befor installing or servicing this equipment.

INSTALLATION,OPERATION AND CARE OF SALAMANDER BROILERS

GENERAL

Salamander Broilers are produced with quality workmanship and material. Proper installation, usage,and maintenance of your broiler will result in many years of satisfactory performance.

It is suggested that you thoroughly read this entire manual and carefully follow all of the instructions provided.

Product parameter:

Model FCMGS0114-36	BTU	Orifice size		Regulator pressure	
		Nat.	LP	Nat.	LP
36”SALAMANDER BROILER	35000	#31	#52	5”WC	10”WC

INSTALLATION

Before installing, verify that the type of gas supply (natural or propane) agrees with the specifications on the rating plate located underneath the broiler rack drip tray. If the supply and equipment requirements do not agree, do not proceed with the installation. Contact your dealer immediately.

UNPACKING

Immediately after unpacking, check for possible shipping damage. If the broiler is found to be damaged, save the packaging material and contact the carrier within 15 days of delivery.

Before installing, verify that the type of gas (natural or propane) and the clearance dimensions (see below) agree with the specifications on the rating plate which is located under the crumb tray on the right side.

Part Accessories

No.	Accessory	Q'TY	Fig
1	Support Legs	4	
2	flat net	1	
3	Manual	1	
4	Regulator	1	
5	Orifice	1	

LINE DRAWING

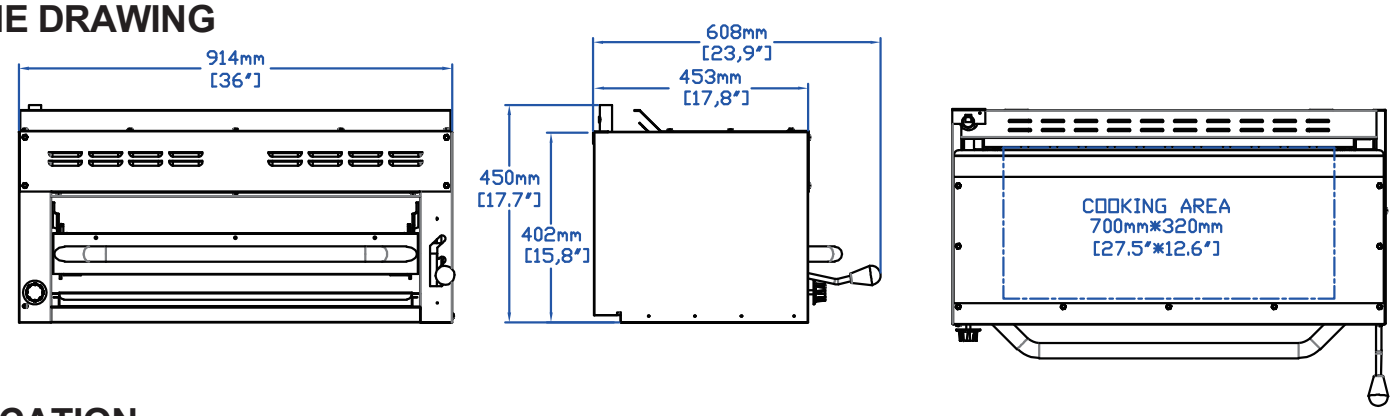

LOCATION

The equipment area must be kept free and clear of combustible substances.

Minimum Clearance	Combustible Construction	Non-Combustible Construction
Rear	2”	0”
Sides	2”	0”
Bottom	0”	0”

The installation location must allow adequate clearances for servicing and proper operation.

A minimum front clearance of 24" is required.

Do not obstruct the flow of combustion and ventilation air. Adequate clearance for air openings into the combustion chamber must be provided. Make sure there is an ad equate supply of air in the room to replace air taken out by the ventilating system. Do not permit fans to blow directly at the broiler. Avoid wall-type fans which create air cross currents with in the room. A void open windows next to the broiler. Maintain an 18" (46 cm) clearance from the top of the broiler flue vent to the filters of the hood venting system.

INSTALLATION CODES AND STANDARDS

The broiler must be installed in accordance with:

In the United States of America:

1. State and local codes.

2. National Fuel Gas Code, ANSI-Z223.1/NFPA #54 (latest edition). This shall include but not be limited to: NFPA #54 Section 10.3.5.2 for Venting. Copies maybe obtained from The American Gas Association Accredited Standards Committee Z223, @ 400N. Capita l St. NW, Washing ton, DC 20001 or the Secretary Standards Council, NFP A, 1 Battery march Park Quincy, MA 02169 -7471

NOTE: In the Commonwealth of Massachusetts
Al l gas appliances vented through a ventilation hood or exhaust system equipped with a damper or with a power means of exhaust shall comply with 248 CMR.

3. NFPA Standard # 96 Vapor Removal from Cooking Equipment , latest edition, available from the National Fire Protection Association, Batterymarch Park , Quincy, MA 02269. In Canada:

1. Local codes.
2. CAN/CSA-B 149.1 Natural Gas Installation (latest edition)
3. CAN/CSA-B 149.2 Propane Installation Code (latest edition), available from the Canadian Gas Association, 178 Rexdale Blvd., Etobicoke, Ontario, Canada M9W 1R3

The appliance and its individual shutoff valve must be disconnected from the gas supply piping system during any pressure testing of that system at test pressures in excess of 1/2 psi(3.5kPa).

The appliance must be isolated from the gas supply piping system by closing its individual pressures equal to or less than 1/2 psi (3.5 kPa).

GAS CONNECTIONS

Codes require that a gas shutoff valve be installed in the gas line ahead of the broiler.

NATURAL GAS: Standard orifices are set at 5" W .C. (Water Column). A pressure regulator is supplied and must be installed when the broiler is connected to the gas supply.

LP GAS: Standard or if ices are set at 10" W .C.(Water Column). A pressure regulator is supplied and must be installed when the broiler is connected to the gas supply.

The gas supply line must be %" or larger. If flexible or semi-rigid connections are used, the inside diameter must be the equivalent of %" iron pip e or larger. All connections of the flexible and semi-rigid type must comply with all local and national requirements. Make sure gas piping is clean and free of dirt, piping compound, and obstructions.

WARNING: PRIOR TO LIGHTING, CHECK ALL JOINTS IN THE GAS SUPPLY LINE FOR LEAKS. USE SOAP AND WATER SOLUTION. DO NOT USE AN OPEN FLAME.

After piping has been checked for leaks, all piping receiving gas should be fully purged to remove air.

GAS PRESSURE REGULATOR INSTALLATION

Gas regulator pressure is preset at 5" Water Column (W .C.) for natural gas, and 10” W .C.
For propane gas. Minor adjustments may be required based on site specific gas pressure.

Install the regulator as close to the salamander broiler on the gas supply line as possible. Make sure that the arrow on the underside of the regulator is oriented in the direction of gas flow to the salamander broiler(Fig. 1) and the regulator is positioned with the vent plug and adjustment screw upright (Fig. 2).

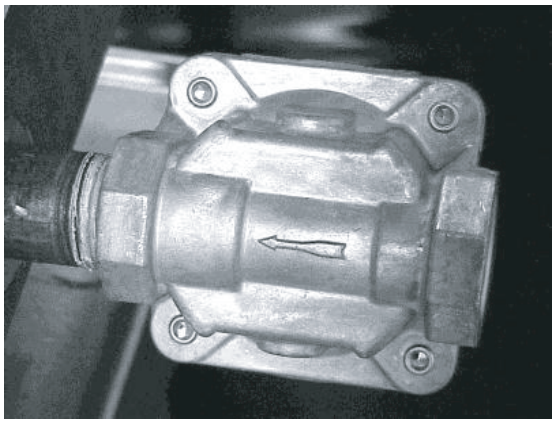

Fig.1

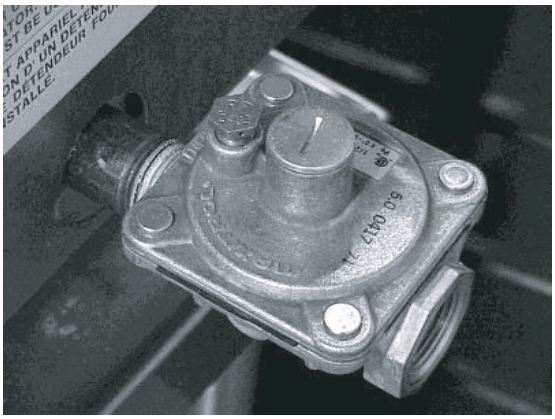

Fig.2

The minimum supply pressure (upstream of the regulator) should be 7-9” W .C. for natural gas and 11 -12” W .C. for propane gas. At no time should the regulator be connected to supply pressure greater than ½ psi (3.5 k Pa) or 14” W .C.

FLUE CONNECTIONS

DO NOT obstruct the flow of flue gases from the flue located on the rear of the broiler. It is recommended that the flue gases be ventilated to the outside of the building through a ventilation system installed by qualified personnel.

Information on the construction an d installation of ventilating hoods may be obtained from the standard f or "Vapor Removal from Cooking Equipment," NFPA No. 96 (latest edit ion), available from the National Fire Protection Association, Batterymarch Park, Quincy, MA 02269.

ASSEMBLY

Salamander Broiler place on a Counter top.

1. Unpack the leg kits package, it should be inside salamander.
2. Turn tighten four legs into bottom of salamander.
3. Put salamander on table or other counter top.
4. Adjust legs, let salamander be leveled and stabled.
5. Connect gas supply pipe with salamander input pipe.

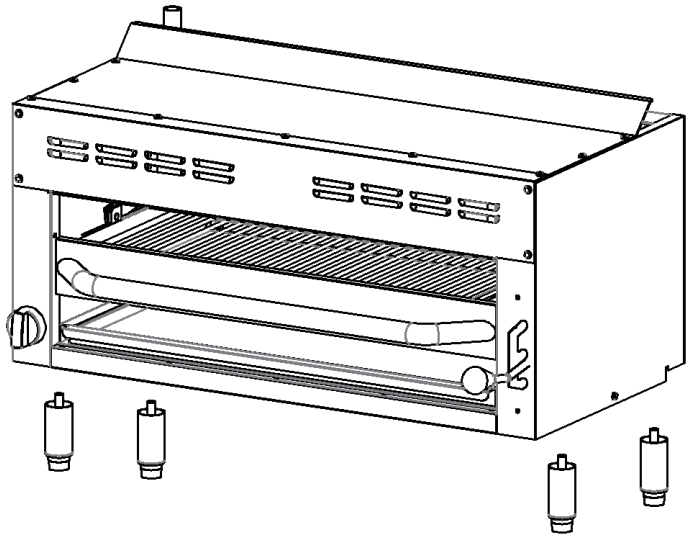

Fig.3

OPERATION

WARNING: THE BROILER AND ITS PARTS ARE HOT. BE CAREFUL WHEN OPERATING, CLEANING OR SERVICING THE BROILER.

CONTROLS

Angled Handle ： —Elevates or lowers the broiling grid to different positions. Grasp the handle and pull towards broiler cavity. This releases the mechanism and allows the lifting handle to move into the desired position.

Burner Valve ： — Regulate the flow of gas to the burners. Gas flow is increased by turning the valve counterclockwise.

Drip Tray ： —Collects grease and waste which is diverted by the tilt of the drip shield.
DO NOT allow the drip tray to overflow. Empty the drip tray when three-quarters full to reduce the possibility of spillage.

Rack Handle ： — Glides the grid forward for easy loading and unloading. To operate, pull straight out.

LIGHTING, RELIGHTING AND SHUTDOWN INSTRUCTION S

1. Turn all burner valves to OFF position
2. Turn gas shutoff valve ON, and wait 1~5 minutes
3. Light standing pilot with a lit taper .
Adjust pilot to ¼" high flame, if necessary, by turning pilot valve adjusting screw counterclockwise to increase or clockwise to decrease flame.
4. Turn burner valve to ON position.
5. lf burner does not light, turn main gas supply OFF and repeat steps 1 through 4.

RACK POSTION AND GAS SETTING

Each operator will find the optimum rack position and gas setting for various products; however, it is recommended that gas input be reduced first when lower rack temperatures are desired. Further reduction in rack temperatures, if necessary, can then be obtained by lowering rack position. Infrared burner must use the full gas setting. Max and minimum temperatures can be achieved at the following settings:

CLEANING

1. Allow broiler to cool.
2. To remove broiler rack for cleaning, adjust broiler rack to center position.

Parts Diagram

Conversion to LP gas orifice

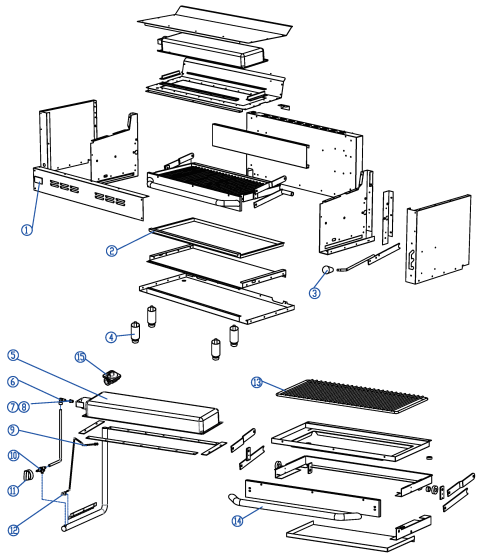

Salamander Explosion Drawing and Spare Parts List		
NO.	PART NO.	Q'TY
1	Nameplate	1
2	Tray	1
3	Knob for handle	1
4	Adjustable foot	4
5	Burner	1
6	Elbow	1
7	Orifice NG	1
8	Orifice LP	1
9	Pilot tube and head	1
10	Gas valve	1
11	Knob	1
12	Pilot valve	1
13	Rack	1
14	Rack handle	1
15	Regulator	1

Conversion to LP gas orifice

1. Take out the screws on the top cover, then take off the top cover, You can see the orifice is on the left side of the salamander broiler as below Fig.7 shows.



Fig.7

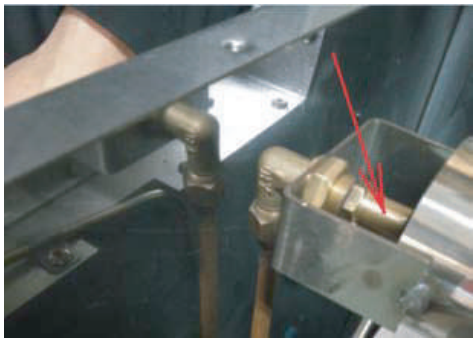

Fig.8

2. As Fig. 8 shows, unscrew and remove the Nat. gas orifice [#31(ф3.2mm)] turning counter-clockwise, then screw in the LP gas orifice [#52(ф1.68mm)] clockwise.

3. Change the pressure regulator spring kit to LP gas model, set at 10" W .C. (Water Column).

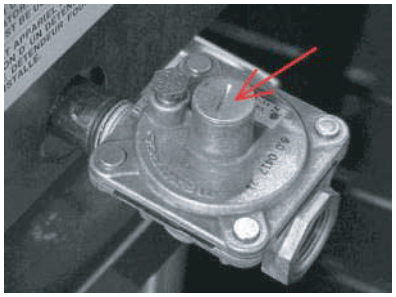

Fig.9



Fig.10

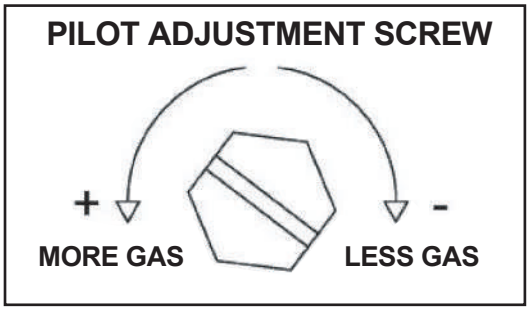

4. Turn pilot adjustment screw clockwise, then light standing pilot and adjust flame to be 1/4" high.

Warranty

What this limited warranty covers:

- This limited warranty provided by Forno Appliances applies exclusively to the original Forno appliance ("Product") sold to the original purchaser ("Purchaser") by an authorized Forno dealer, distributor, or retailer, and installed in the United States or Canada. The Product must remain within the country of original purchase.
- This warranty is valid for a period of one (1) year from the date of original retail purchase and covers parts and labor.
- The warranty period may vary depending on the retailer or authorized dealer from whom the product was purchased. Please refer to your retailer's warranty terms or proof of purchase to confirm the applicable warranty coverage and duration for your product.
- This warranty is strictly limited to commercial use. Any residential use of the Product will void this warranty.
- Forno Appliances will repair or replace, at its discretion, any component or part that proves to be defective due to manufacturing defects in materials or workmanship under normal commercial use during the warranty period. Repair or replacement will be performed by a Forno Authorized Service provider during normal working hours.
- This warranty does not cover installation, misuse, abuse, improper maintenance, or normal wear and tear. The Purchaser is responsible for ensuring the Product is reasonably accessible for service.
- Warranty coverage is non-transferable. In the event of replacement of parts or the entire Product, the replacement will assume the remaining warranty period from the original purchase date. The warranty period will not be extended.

Important

Retain proof of original purchase to establish the warranty period. Forno's liability on any claim of any kind, with respect to the goods and/or services provided, shall in no event exceed the value of the product, service, or part thereof which has given rise to the claim.

30-Day Cosmetic Warranty

The Purchaser must inspect the Product at the time of delivery. Forno warrants that the Product is free from manufacturing-related cosmetic defects in materials and workmanship for a period of thirty (30) days from the date of original retail purchase.This coverage includes:

- Paint blemishes
- Chips
- Visible finish defects

Cosmetic warranty does NOT cover:

- Damage resulting from improper transportation, handling, or installation (including dents, warping, deformation, or damaged components, cracked or damaged glass components)
- Minor color variations in painted or enameled parts
- Differences caused by lighting conditions, installation location, or similar factors
- Stains, corrosion, or discoloration caused by external substances or environmental conditions
- Labor costs
- Display models, floor models, B-stock, open-box, "as-is" products, or demo units

What Exclusion: What is not covered

- Installation services at the time of purchase or during product replacement.
- Use of the Product in any residential or non-commercial application
- Use of the Product for purposes other than its intended use
- Service or repairs performed by anyone other than a Forno Authorized Service provider
- Damage or repair services required to correct work performed by unauthorized parties or the use of unauthorized parts.
- Installation not in accordance with local/state/county fire codes, electrical codes, gas codes, plumbing codes, building codes, laws or regulations.
- Defects or damage due to improper storage of the Product.
- Defects, damage or missing parts on products sold out of the original factory packaging or from displays.
- Service calls or repairs to correct an incorrect installation of the Product and/or related accessories.
- Replacement of parts/service calls to connect, convert or otherwise repair the electrical wiring and/or gas line in order to properly use the product.
- Replacement of parts/service calls to provide instructions and information on the use of the Product.
- Replacement of parts or service calls to correct issues arising from use of the Product in a manner inconsistent with normal and customary commercial use.
- Replacement of parts/service calls due to wear and tear of components such as seals, knobs, pan supports, shelving, cutlery baskets, buttons, touch displays, scratched or broken ceramic-glass tops.
- Replacement of parts/service calls for lack of/improper maintenance, including but not limited to: build up of residues, stains, scratches, discoloration, corrosion.
- Defects and damages arising from accidents, alteration, misuse, abuse or improper installation.
- Defects and damages arising from Product transport, logistics and handling. Inspection of the product must be made at time of delivery. Following receipt and inspection, the selling dealer/delivery company must be notified of any issues arising from handling, transport and logistics.
- Defects or damage resulting from external forces beyond the control of Forno Appliances, including but not limited to wind, rain, sand, fire, flooding, mudslides, freezing temperatures, excessive moisture or prolonged exposure to humidity, power surges, lightning, structural failures surrounding the appliance, or other natural phenomena.
- Products whose serial number has been altered/damaged/tampered with. In no case shall Forno be held liable or responsible for damage to surrounding property, including furniture, cabinetry, flooring, panels, and other structures surrounding the Product. Forno is neither liable nor responsible for the Product if it is located in a remote area or an area where certified trained technicians are not reasonably available. Purchaser must bear any transportation and delivery costs of the Product to the nearest Authorized Service Center or the additional travel expenses of a certified trained technician.

DISCLAIMER OF WARRANTIES AND LIMITATION OF LIABILITY

There are no warranties, either express or implied, other than those listed and described above, including but not limited to any implied warranties of merchantability or fitness for a particular purpose, that shall apply after the express warranty period stated above.

No other express warranty or guarantee given by any person, firm, or corporation with respect to this Product shall be binding on Forno.

Forno shall not be liable for any loss of revenue or profits, failure to realize expected savings or other benefits, time away from work, loss of food or beverages, travel or lodging expenses, costs to rent or purchase replacement appliances, or any remodeling or construction expenses.

Forno shall also not be liable for any indirect, incidental, special, or consequential damages arising from the use, misuse, or inability to use this Product, regardless of the legal theory on which the claim is based, and even if Forno has been advised of the possibility of such damages.

In no event shall Forno's total liability exceed the purchase price of the Product giving rise to the claim.

The Purchaser assumes all risk and liability for any loss, damage, or injury to persons or property resulting from the use, misuse, or inability to use the Product, except where such damage is directly caused by the negligence of Forno.

This limited warranty is non-transferable, applies only to the original Purchaser, and constitutes the Purchaser's exclusive remedy.

FORNO®
Commerciale

FOR
FAST SUPPORT
EMAIL AT **INFO@FORNO.CA**

Customer Support: Call 1-866-231-8893 or email: info@forno.ca