Honeywell

115 Can Beverage Cooler User Manual

Read and save these instructions before use

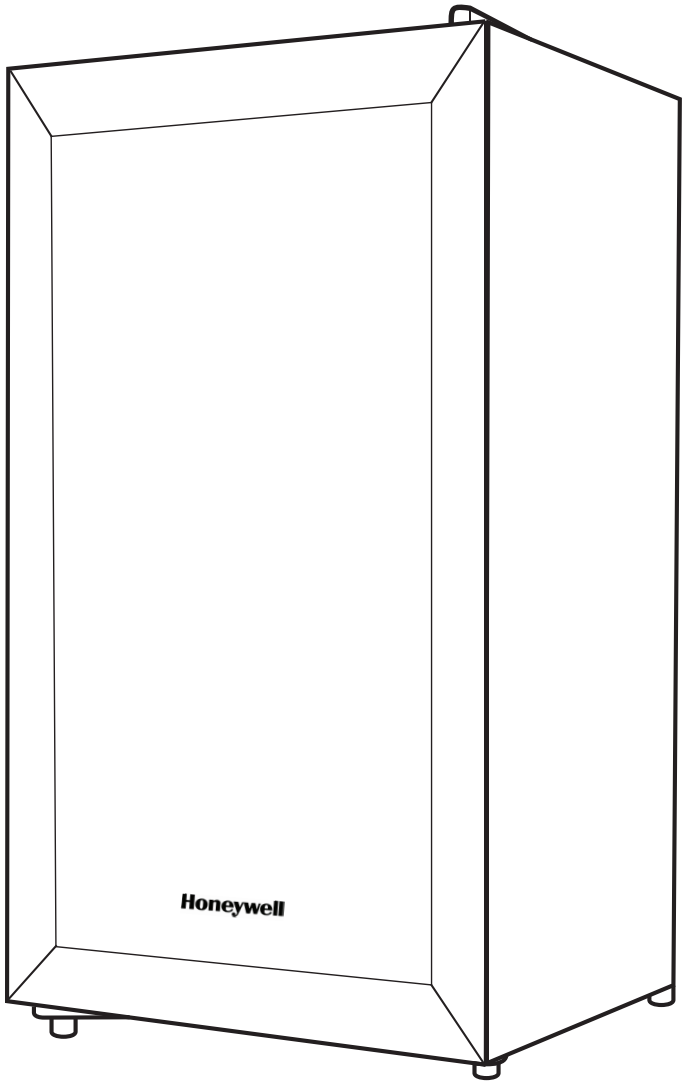

H115BCB
H115BCS

CONTENTS

1 Safety Warnings

1.1 Warning 1-2

1.2 Meaning of safety warning symbols 3

1.3 Electricity related warnings 3

1.4 Related warnings for use 4

1.5 Warnings related to placing items 4

1.6 Warnings for energy 5

1.7 Warnings related to disposal 5

2 Installation Instructions

2.1 Before using your beverage cooler 6

2.2 Names of Components 7

2.3 Reversing the Door 7-9

3 Operation Istructions

3.1 Controls 9

3.2 Storage 9

3.3 Shelves 9

4 Care and Maintenance 10

5 Troubleshooting 11-12

1 SAFETY WARNINGS

1.1 Warning



WARNING: risk of fire / flammable materials

Plug into its own individual electrical outlet with a voltage rating that matches the rating label on the cooler (115V/60Hz). Use receptacles that cannot be turned off by a switch or pull chain. Be sure that the plug is fully inserted into the receptacle.

Plug into a grounded 3-prong outlet. Do not under any circumstances cut or remove the third ground prong from the power cord supplied.

To protect against electric shock, do not immerse the Beverage cooler, plug or cord in water or other liquids.

Never unplug the cooler by pulling the power cord. To disconnect the Beverage cooler, always grip the plug firmly and pull straight out from the wall outlet.

Repair or replace immediately all power cords that have become frayed or otherwise damaged. Do not use a cord that shows cracks or abrasion damage along its length or at either end.

Do not connect or disconnect the electric plug when your hands are wet.

Unplug the appliance or disconnect power before cleaning or servicing. Failure to do so can result in electrical shock or death.

Do not attempt to repair or replace any part of your appliance unless it is specifically recommended in this material. All other servicing should be referred to a qualified technician.

4. If the supply cord is damaged, it must be replaced by the manufacturer, its service agent or similarly qualified persons in order to avoid a hazard.

5. To avoid a hazard due to instability of the appliance, it must be fixed in accordance with the instructions.

6. When positioning the appliance, ensure the supply cord is not trapped or damaged.

7. Do not locate multiple portable socket-outlets or portable power supplies at the rear of the appliance.

8. Keep ventilation openings, in the appliance enclosure or in the built-in structure, clear of obstruction.

9. Do not use mechanical devices or other means to accelerate the defrosting process,other than those recommended by the manufacturer.

10. Do not damage the refrigerant circuit.
11. Do not use electrical appliances inside the drink storage compartments of the appliance, unless they are of the type recommended by the manufacturer.

– Opening the door for long periods can cause a significant increase of the temperature in the compartments of the appliance.

– Clean regularly surfaces that can come in contact with drink and accessible drainage systems.

– Clean water tanks if they have not been used for 48 h, flush the water system connected to a water supply if water has not been drawn for 5 days.

– If the refrigerating appliance is left empty for long periods, switch off, defrost, clean, dry, and leave the door open to prevent mould developing within the appliance.

WARNING: Do not use solvent-based cleaning agents of abrasives on the interior. These cleaners may damage or discolour the interior.

WARNING: Do not use this apparatus for other than its intended purpose.

DANGER – Risk of fire or explosion. Flammable refrigerant used.

DO NOT use mechanical devices to defrost refrigerator. DO NOT puncture refrigerant tubing.

DANGER – Risk of fire or explosion. Flammable refrigerant used. To be repaired only by trained service personnel. DO NOT puncture refrigerant tubing.

CAUTION – Risk of fire or explosion. Flammable refrigerant used. Consult repair manual / owner's guide before attempting to service this product. All safety precautions must be followed.

CAUTION – Risk of fire or explosion. Dispose of property in accordance with federal or local regulations. Flammable refrigerant used.

CAUTION – Risk of fire or explosion due to puncture of refrigerant tubing. Follow handling instructions carefully. Flammable refrigerant used.

CAUTION – To prevent a child from being entrapped, keep out of reach of children and not in the vicinity of the cooler.

Read all instructions before using the beverage cooler.

Before you throw away your old beverage cooler, take off the door but leave the shelves in place so that children may not easily climb inside.

Never clean appliance parts with flammable fluids. The fumes can create a fire hazard or explosion.

Do not store or use gasoline or any other flammable vapors and liquids in the vicinity of this or any other appliance. The fumes can create a fire hazard or explosion.

1.2 Meaning of Safety Warning Symbols

 Prohibition Symbols	The symbols indicate prohibited matters, and those behaviors are forbidden. Non-compliance with the instructions may result in product damages or endanger the personal safety of users.
 Warning Symbols	The symbols indicate matters that must be followed, and those behaviors must be strictly executed in line with the operation requirements. Non-compliance with the instructions may result in product damages or endanger the personal safety of users.
 Note Symbols	The symbols indicate matters to pay attention to, and these behaviors shall be specially noted. Due precautions are needed or minor or moderate injuries or damages of the product will be caused.

This manual contains important safety information that should be observed by users.

1.3 Electricity Related Warnings

- Do not pull the power cord when pulling the power plug of the cooler. Please firmly grasp the plug and pull it out from the socket directly.



- Do not damage the power cord under any condition, do not use when the power cord is damaged or the plug is worn.
- Worn or damaged power cord should be replaced in manufacturer authorized maintenance stations.



- The power plug should be firmly contacted with the socket or else a fire might be caused. Please ensure that the grounding electrode of the power socket is equipped with a reliable grounding line.



- Please turn off the valve of the leaking gas and then open the doors and windows in case of leakage of gas and other flammable gases. Do not unplug the cooler and other electrical appliances considering that spark may cause a fire.



- To ensure safety, it is not recommended that to place regulators, rice cookers, microwave ovens and other appliances on the top of the beverage cooler, those recommended by the manufacturer are not included. Do not use electrical appliances in the food pantry.

1.4 Related Warnings for Use



- Do not arbitrarily disassemble or reconstruct the cooler, nor damage the refrigerant circuit; maintenance of the appliance must be conducted by a specialist.
- Damaged power cord must be replaced by the manufacturer, its maintenance department or related professionals in order to avoid danger.



- The gaps between cooler door and cooler body are small, be noted not to put your hand in these areas to prevent from squeezing the finger. Please be gentle when closing or opening the cooler door to avoid falling articles.



- Do not give package and other components to children to play. The bending board and plastic film may cause suffocation. Do not allow children to enter or climb the cooler to prevent that children are sealed in the cooler or children are injured by the falling cooler.
- Do not spray or wash the cooler; do not put the cooler in moist places easy to be splashed with water so as not to affect the electrical insulation properties of the cooler.
- Do not use cooler body, cooler door, etc. as pedal or support.



- Do not place heavy objects on the top of the cooler considering that objects may fall when opening or closing the door, and accidental injuries might be caused.
- Please pull out the plug in case of power failure or cleaning. Do not connect the cooler to power supply within five minutes to prevent damages to the compressor due to successive starts.

1.5 Warnings Related to Placing Items



- Do not put flammable, explosive, volatile and highly corrosive items in the cooler to prevent damages to the product or fire accidents.
- Do not place flammable items near the cooler to avoid fires



- This product is intended for beverages. However, according to national standards, it shall not be used for other purposes, such as storage of blood, drugs or biological products.

1.6 Warnings for Energy

01 Cooler might not operate consistently when sited for an extended period of time below the cold end of the range of temperatures for which the cooler appliance is designed.

02 The need to not exceed the storage time(s) recommended by the beverage manufacturers for any kind of beverage.

03 The precautions necessary to prevent an undue rise in the temperature of the beverage while defrosting the cooler.

04 The fact that a rise in temperature of the beverage during manual defrosting, maintenance or cleaning could shorten the storage life.

05 The necessity that, for doors or lids fitted with locks and keys, the keys be kept out of the reach of children and not in the vicinity of the cooler appliance, in order to prevent children from being locked inside.

1.7 Warnings Related to Disposal

Refrigerant and cyclopentane foaming material used for the cooler are flammable. Therefore, when the cooler is scrapped, it shall be kept away from any fire source and be recovered by a recovering company with corresponding qualification other than be disposed of by combustion, so as to prevent damage to the environment or any other harm.

When the cooler is scrapped, disassemble the doors, and remove gasket of door and shelves; put the doors and shelves in a proper place, so as to prevent trapping of any child.



Correct Disposal of this product:

This marking indicates that this product should not be disposed with other wastes. To prevent possible harm to the environment or human health from uncontrolled waste disposal, recycle it responsibly to promote the sustainable reuse of material resources. To return your used device, please use the return and collection systems or contact the retailer where the product was purchased. They can take this product for environmental safe recycling.

2 INSTALLATION INSTRUCTIONS

2.1 Before Using Your Beverage Cooler

Remove the exterior and interior packaging.

Check to be sure you have all of the following parts:

- Shelves
- Instruction Manual

IMPORTANT: Before connecting this Beverage cooler to a power source, let it stand upright for approximately 24 hours. This will reduce the possibility of a malfunction in the cooling system from handling during transportation.

Clean the interior surface with lukewarm water using a soft cloth.

Warning: Improper use of the grounded plug can result in the risk of electrical shock. If the power cord is damaged, have it replaced by an authorized service center.

- The Beverage cooler should always be plugged into its own individual electrical outlet which has a voltage rating that matches the rating label on the Beverage cooler. This provides the best performance and also prevents overloading house wiring circuits that could cause a fire hazard from overheated.
- Do not under any circumstances cut or remove the third ground prong from the power cord supplied.
- Do not use an extension cord or adapter plug. However, if you must use an extension cord, it is absolutely necessary that it be a UL-listed, 3-wire grounding type Beverage cooler extension cord having a grounding type plug and outlet and that the electrical rating of the cord is 10 amperes (minimum) and 115 volts.
- Do not use a cord that shows cracks or abrasion damage along its length or at either end.
- If the Beverage cooler is going to be used in an area that is prone to power surges/outages, it is suggested that you use a power surge protector. The surge protector that you select must have a surge block high enough to protect the Beverage cooler it is connected to. Damages due to power surges are not considered a manufacturer covered defect and will void your product warranty.
- Electrical Connection
- Warning: Improper use of the grounded plug can result in the risk of electrical shock. If the power cord is damaged, have it replaced by an authorized service center.
- The Beverage cooler should always be plugged into its own individual electrical outlet which has a voltage rating that matches the rating label on the Beverage cooler. This provides the best performance and also prevents overloading house wiring circuits that could cause a fire hazard from overheated.
- Do not under any circumstances cut or remove the third ground prong from the power cord supplied.
- Do not use an extension cord or adapter plug. However, if you must use an extension cord, it is absolutely necessary that it be a UL-listed, 3-wire grounding type Beverage cooler extension cord having a grounding type plug and outlet and that the electrical rating of the cord is 10 amperes (minimum) and 115 volts.
- Do not use a cord that shows cracks or abrasion damage along its length or at either end.
- If the Beverage cooler is going to be used in an area that is prone to power surges/outages, it is suggested that you use a power surge protector. The surge protector that you select must have a surge block high enough to protect the Beverage cooler it is connected to. Damages due to power surges are not considered a manufacturer covered defect and will void your product warranty.

2.2 Names of Components

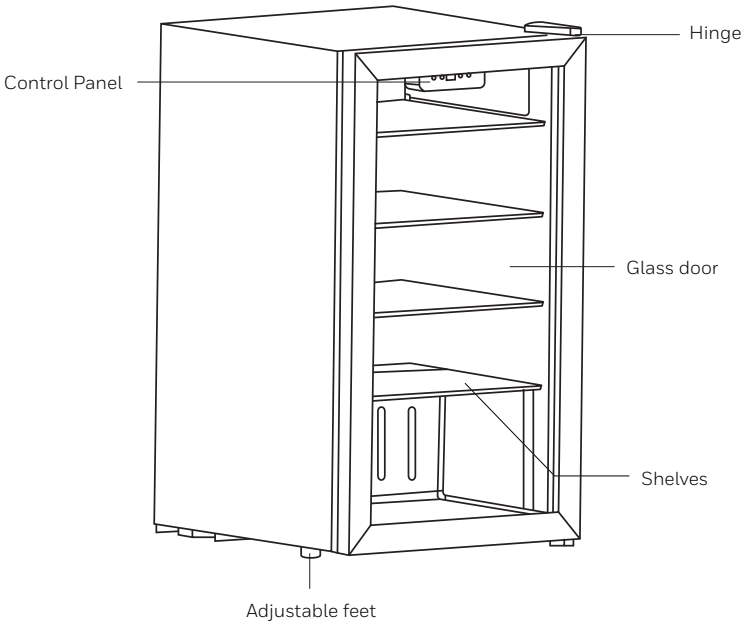

2.3 Reversing the Door

1. Remove the black plastic door hinge cover to expose the 4 upper hinge screws. You can do so by using a flathead screwdriver to pry it upward.

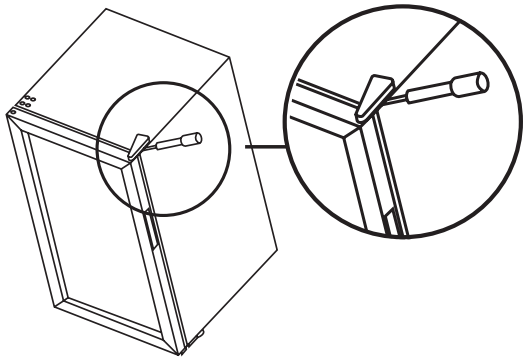

2. Unscrew the 4 screws of the upper hinge.

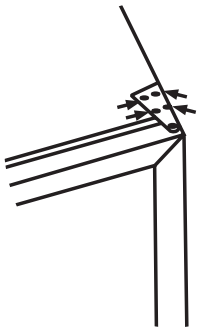

2.3 Reversing the Door

3. Turn the beverage cooler over to access the lower door hinge.

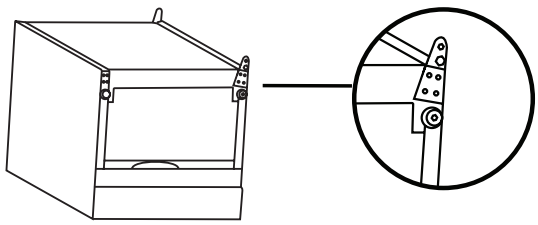

4. Unscrew the 4 screws of the lower hinge.

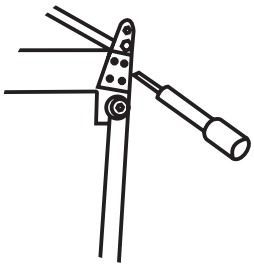

5. Remove the 4 black rubber plugs on the top of the beverage cooler in the front left corner. You can do so by sticking a blade, thin flathead screwdriver, or another sharp device to pry them upward.

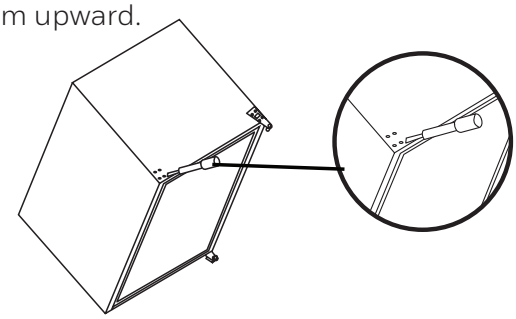

6. Remove the silver plug at the top left side of the door. You can do so by sticking a blade, thin flathead screwdriver, or another sharp device to pry them upward.

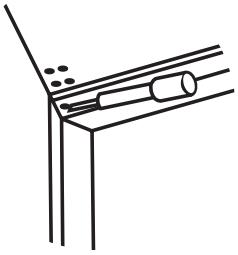

7. Keep the door body still, insert the lower door hinge into the left door hinge hole.

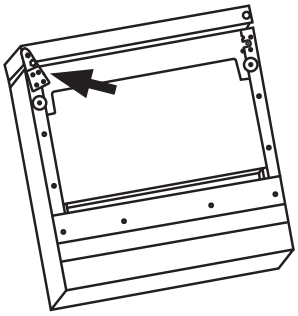

8. Screw the 4 lower hinge screws to secure the lower hinge.

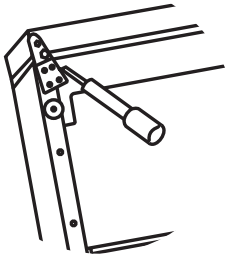

9. Insert the upper door hinge into the hole on the top left of the door.

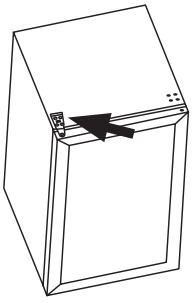

10. Screw the 4 upper hinge screws to secure the upper hinge and place the black plastic door hinge cover over the upper hinge.

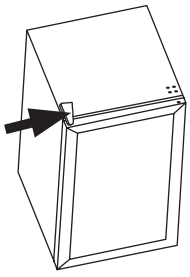

2.3 Reversing the Door

11. Push the 4 black rubber plugs into the 4 open screw holes on the top front right corner of the beverage cooler.

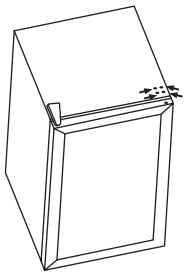

12. Push the silver plug into the top right side of the door.

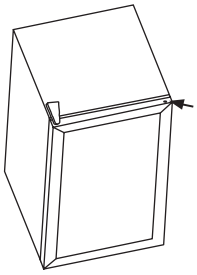

3 OPERATING YOUR BEVERAGE COOLER

3.1 Controls

After plugging the Beverage cooler into a wall outlet, the cooler would turn on automatically and the LED screen would show the temperature inside of the cooler.
After setting your desired serving temperature, allow the cooler to cool down for 3 to 4 hours before placing beverage bottles in the Beverage cooler.

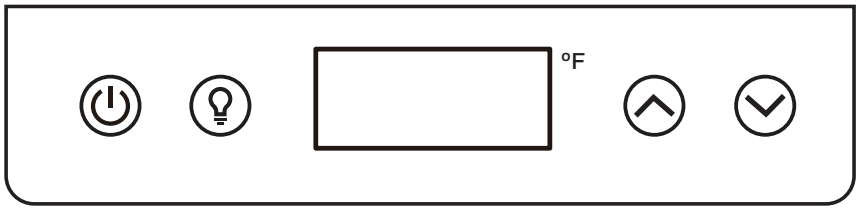

Temperature setting range: (34-64°F)

Touch the power button to turn on the appliance. Press power button for 3 seconds to turn off the appliance.

Touch the lightbulb button to turn ON/OFF the interior LED lighting.
Touch the + button to increase or the - button to decrease the temperature of the selected zone.

3.2 Storage

Many cans and bottles may differ in size and dimensions. As such the actual number of bottles you may be able to store may vary.

3.3 Shelves

To remove the shelves from the track, as shown in figure.

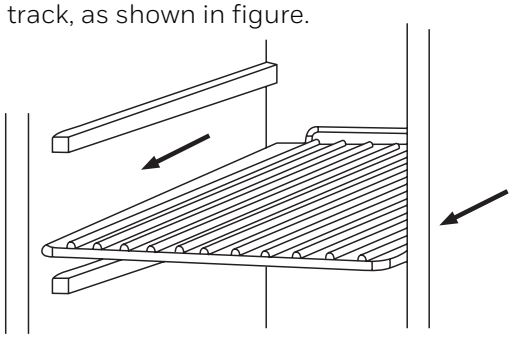

4 CARE & MAINTENANCE

4.1 Cleaning your beverage cooler

IMPORTANT: Always unplug the cooler before cleaning or performing maintenance. Never use harsh cleansers or scouring pads to clean any part of the cooler.

- Turn off the power, unplug the Beverage cooler, and remove all items including shelves.
- Wash the inside surfaces with warm water and baking soda solution. The solution should be about 2 tablespoons of baking soda to a quart of water.
- Wash the shelves with a mild detergent solution.
- Wring excess water out of the sponge or cloth when cleaning the area near the controls, or any electrical parts.
- Wash the outside cabinet with warm water and a mild liquid detergent. Rinse well and wipe dry with a clean soft cloth. Do not use steel wool or steel brush to rub the stainless steel, which will contaminate the stainless steel with steel particles and rusting may occur.

Power Failure

Most power failures are corrected within a few hours and should not affect the temperature of your Beverage cooler. If the power is off for an extended period of time, proper steps should be taken to protect your contents.

Vacation Time

Leave the Beverage cooler operating during vacations of less than three weeks. For periods longer than this, turn the Beverage cooler off and leave the door slightly ajar to prevent odor from building inside the Beverage cooler.

Moving Your Beverage Cooler

- Remove all items (bottles) from the cooler;
- Securely tape down any loose items, such as shelves, inside the cooler.
- Turn the adjustable leg up to the base to avoid damage.
- Tape the door shut.
- Ensure that the Beverage cooler stays securely in the upright position during transportation. Protect the outside of the Beverage cooler with a blanket or a similar item.

5 TROUBLESHOOTING

The following simple issues can be handled by the user. Please call the after-sale service department if the issues are not settled.

The Beverage cooler does not run.	The Beverage cooler may not be plugged in, or plug may be loose. The Beverage cooler is turned off. House fuse blown or tripped circuit breaker.	Ensure the Beverage cooler has been plugged in properly Press to turn on the cooler. Check/replace fuse. Reset circuit breaker.
The Beverage cooler is not cold enough.	External environment may require a higher setting. The Beverage cooler has recently been disconnected for a period of time. Prolonged or frequent door openings. The door is not closed completely. The door gasket does not seal properly.	Set a colder setting. Allow several hours for the temperature to stabilize. It takes 3-4 hours for the Beverage cooler to cool down completely. Open the door less often. Close the door properly. Check the door gasket. Clean or change gasket if necessary.
The compressor turns on and off frequently.	The room temperature is hotter than normal. A large amount of contents has been added to the cooler. Prolonged or frequent door openings. The temperature has not been set correctly. The door is not closed completely. The door gasket does not seal properly.	It's normal for the Beverage cooler to work harder under these conditions. A large amount of contents cause the Beverage cooler to run more until the desired temperature is reached. Open the door less often. Press either or to check the set temperature, and set the temperature properly. Close the door properly. Check the door gasket. Clean or change gasket if necessary.
The light does not work.	Not plugged in. The circuit breaker tripped or a blown fuse. The light button is "OFF".	Plug the cooler in. Check the breaker and/or fuses. Press to turn the light ON.
Vibrations.	The cooler is not leveled. The bottles are vibrating. There is an object under the cooler.	Check to assure that the cooler is level. Make sure the bottles don't touch each others. Remove the object under the cooler.
The cooler seems to make too much noise.	The cooler is not level. Normal noise from the flow of the refrigerant	Level the cooler. The rattling noise may come from the flow of the refrigerant, which is normal. As each cycle ends, you may hear gurgling sounds caused by the flow of refrigerant in your cooler. Contraction and expansion of the inside walls may cause popping and crackling noises.

5 TROUBLESHOOTING

The following simple issues can be handled by the user. Please call the after-sale service department if the issues are not settled.

The door will not close properly.	The cooler is not level. The door was reversed and not properly installed. The gasket is dirty. The shelves are out of position.	Level the cooler. Re-install the door properly. Clean the door gasket. Place the shelves properly.
Moisture build up on interior or exterior of the Beverage cooler.	This is normal during high humidity periods. This is normal in high temperature environment. Prolonged or frequent door openings. The door does not seal completely.	Lower the room humidity. Move the cooler to a cooler place, and avoid heat and sunlight. Open the door less often. Check door gaskets for proper seal.
Error Code: E1	Temperature sensor failure.	Contact customer service: support@ honeywellcooling appliances.com



LIMITED WARRANTY

Models included are:
H101TFS, H16MRB, H16MRS, H33MRB, H33MRS, H31MRS, H31MRB, H11MFW, H11MFB, H11MFS, H17UFW, H17UFS, H35CFW, H5CFW, H7CFW, H14WCB, H24WCB, H34WCB, H52WCS, H48BCS, H115BCS, H4MFSS, HDS18SS, HDS24SS, HCTDS1W, HCTDS2W, HAC5, HAC5-B, HAC6, HAC6-B, HAC8, HAC8-B, HAC10, HAC10-B, HAC12, HAC12-B, HAC14, HAC12-B, HAC-U8, HAC-U8-B, HAC-U10, HAC-U10-B, HAC-U12-W, HAC-U12-B, H3UFW, H3UFB, H3UFS, HAC-8I, H7WCS, H36WCS, H46WCS, H56WCS, H154WCS, H165WCS, H174WCS, H186WCS, H46WCS1, H7WCS-B, H36WCS-B, H46WCS-B, H46WCS-1B, H56WCS-B, H154WCS-B, H165WCS-B, H174WCS-B, H186WCS-B, H142BCS, H190BCS, H24BWCS, H115BCB

Products listed above are covered by the terms of this Limited Warranty. For purposes of this Limited Warranty,

the term “product” means any appliance manufactured for BHRS Group. BHRS Group warrants that it will, at BHRS Group’s option, replace or repair the Purchaser’s BHRS Group product sold in the U.S. or Canada by an authorized retailer if that product is defective due to faulty workmanship or materials, subject to the limitations described in this Limited Warranty. BHRS Group undertakes no responsibility for the quality of the goods except as otherwise provided in this warranty. There are no warranties that extend beyond the description on the face hereof. This Limited Warranty is valid only in connection with the original purchase of new products from authorized retailers and extends from the original purchase date of the original product purchased. This warranty extends only to the original purchaser of the product and lasts for one (1) year from the date of the original purchase or until the original purchaser of the product sells or transfers the product, whichever fi st occurs. An “original purchaser,” for the purposes of this Limited Warranty, is an individual or entity who purchases the product directly from BHRS Group or an authorized retailer of BHRS Group with the intent to use the product for personal consumer use and commercial or industrial use and not with the intent to resell the product. An “authorized retailer,” for purposes of this Limited Warranty, is an individual or entity authorized by BHRS Group to sell the product directly to original purchasers.

An individual or entity that purchases the product from whatever source with the intent to resell the product is an unauthorized reseller (“unauthorized reseller”). For the purpose of this Limited Warranty a “Third Party” would be considered any plumber, maintenance company, or individual hired by the Purchaser.

This Limited Warranty does not apply to used, refurbished, renewed, floor model or “demo” products, or to products sold by unauthorized resellers, including without limitation, unauthorized resellers on third party websites, including, without limitation, Craigslist, eBay, Amazon, etc. Unauthorized resellers are not “original purchasers” for the purpose of this Limited Warranty. If the purchaser is not the original purchaser of this product, the purchaser takes the product “AS IS,” “with all faults” and without warranty. BHRS Group reserves the right to require a valid serial number located on your product to submit a valid claim under this Limited Warranty. Products where the serial number has been removed or evidence showing the removal or attempted removal of the serial number label will not be eligible to make a claim under this Limited Warranty. IF THE PURCHASE OF THIS PRODUCT WAS NOT DIRECTLY FROM BHRS GROUP, PROOF OF PURCHASE WILL BE REQUIRED TO DEMONSTRATE THAT PURCHASER IS THE ORIGINAL PURCHASER AND THE PRODUCT WAS PURCHASED FROM AN AUTHORIZED RETAILER, AND ELIGIBLE TO MAKE A VALID CLAIM UNDER THIS LIMITED WARRANTY. Your purchase date is established from the date of your sales receipt. BHRS Group may re-quire the purchaser to provide proof of the quality and condition of the appliance if the purchaser makes a claim under this Limited Warranty. BHRS Group reserves the right to invalidate this Limited Warranty if the appliance is determined, in BHRS Group’s reasonable discretion, to be inadequate or if the appliance is found to be in an unsanitary condition. This warranty does not apply if the product was damaged or failed because of accident, improper handling or operation, relocation, abuse, misuse, unauthorized repairs made or attempted, or improper installation or maintenance. Under this Limited Warranty, products are required to be plugged directly into a grounded wall outlet. Plugging a product into an extension cord or surge protector will be considered misuse and will void this Limited Warranty. If damage to the product has occurred during shipping, the damage must be reported to BHRS Group within the first 30 days from the original purchase date to be eligible to make a claim under the Limited Warranty. Shipping damage reported to BHRS Group outside of the fi st 30 days from the original purchase date will not be eligible for a valid

claim under this Limited Warranty. This warranty does not cover shipping costs for the return of products to BHRS Group for repair or replacement.

To submit a valid claim under this Limited Warranty, troubleshooting the product with a BHRS Group Customer Success Expert is required. If troubleshooting the product is refused by the Purchaser, BHRS Group reserves the right to deny the Limited Warranty Claim. In the event a part is necessary to correct the problem with a Product, BHRS Group will provide the part at no cost to the original purchaser under this Limited Warranty. Replacing parts or attempting to correct an issue with the Product is required prior to submitting a claim for a replacement product under this Limited Warranty. Instructions for troubleshooting a Product or replacing a part will be provided by BHRS Group. Troubleshooting, repairs, part replacement, installation, and proper maintenance are the responsibility of the Purchaser. Instructions for proper installation and maintenance will be provided in the user manual.

Installation, maintenance, or repairs of the Product is the responsibility of the Purchaser. The Purchaser reserves the right to use a Third Party for installation, maintenance, and repair at their own risk. BHRS Group is not responsible for any additional cost incurred for installation, maintenance, or repair of the Product including but not limited to additional material needed for installation or the cost of a Third Party. Damage or failure of the Product due to improper installation, maintenance, or repair caused by a Third Party or the Purchaser is not the responsibility of BHRS Group and will not be covered under this Limited Warranty. Instructions for proper installation and maintenance will be provided in the user manual.

ANY AND ALL WARRANTIES, EXPRESSED OR IMPLIED (INCLUDING, WITHOUT LIMITATION, ANY IMPLIED WARRANTY OF MERCHANTABILITY), LAST ONE YEAR FROM THE DATE OF ORIGINAL PURCHASE OR UNTIL THE ORIGINAL PURCHASER OF THE PRODUCT SELLS OR TRANSFERS THE PRODUCT, WHICHEVER FIRST OCCURS. IN NO EVENT SHALL BHRS GROUP'S LIABILITY UNDER ANY EXPRESS OR IMPLIED WARRANTY INCLUDE (I) INCIDENTAL OR CONSEQUENTIAL DAMAGES FROM ANY CAUSE WHATSOEVER, INCLUDING BUT NOT LIMITED TO ELECTRICAL OR WATER DAMAGE, OR (II) REPLACEMENT OR REPAIR OF ANY HOUSE FUSES, CIRCUIT BREAKERS OR RECEPTACLES. NOTWITHSTANDING ANYTHING TO THE CONTRARY, IN NO EVENT SHALL BHRS GROUP'S LIABILITY UNDER ANY EXPRESS OR IMPLIED WARRANTY EXCEED THE PURCHASE PRICE OF THE PRODUCT AND ANY SUCH LIABILITY SHALL TERMINATE UPON THE EXPIRATION OF THE WARRANTY PERIOD.

Except as otherwise provided, BHRS Group will not charge Original Purchaser to repair or replace the purchaser's Product if it is deemed defective during the length of this Limited Warranty, but any transportation costs associated with repairs or replacements are Purchaser's responsibility. No new warranty is provided with a replacement product. The warranty for the replacement product runs from the date of the original purchase of the original product. In the event that repair is necessary, such repair will be at no charge to the Purchaser except for transportation costs associated with such repair or replacement of a product in compliance with the terms of this Limited Warranty.

In the event, a warranty claim is filed and a warranty replacement is deemed necessary, the purchaser will be required to surrender the original product to BHRS Group at the time of replacement. Some states and provinces do not allow limitations on how long an implied warranty lasts or the exclusion or limitation of incidental or consequential damages, so these exclusions or limitations may not apply to you. This warranty gives you specific legal rights. You may also have other rights which vary from state to state and province to province.

If you want to return or replace the product, please contact the store where it was purchased (remember to bring the purchase invoice). If your product needs repair, please contact us via email or phone.

If you want to return or replace the product, please contact the store where it was purchased (remember to bring the purchase invoice). If your product needs repair, please contact us via email or phone.

BHRS Group, LLC
585 Prospect St.
Lakewood, NJ 08701

Customer Service Tel: 1-888-604-0295
Customer Service Email: support@honeywellcoolingappliances.com
Website: honeywellcoolingappliances.com

©2026 BHRS Group, LLC. All Rights Reserved.

The Honeywell Trademark is used under license from Honeywell International Inc. Honeywell International Inc. makes no representations or warranties with respect to this product. This product is manufactured by BHRS Group, LLC.

MADE IN CHINA

Honeywell