Installation Manual

Installation and Appliance Setup

INSTALLER: Leave this manual with party responsible for use and operation.
OWNER: Retain this manual for future reference.

***NOTICE: DO NOT** discard this manual!*

HEARTH & HOME technologies

Stadium Series Vented Gas Log Set

Model(s):

2TR-IPI-R18-N; 2TR-IPI-R18-P
2TR-IPI-R24-N; 2TR-IPI-R24-P
2TR-IPI-R30-N; 2TR-IPI-R30-P
3TR-IPI-R18-N; 3TR-IPI-R18-P
3TR-IPI-R24-N; 3TR-IPI-R24-P
3TR-IPI-R30-N; 3TR-IPI-R30-P

PFS C US

2 Tier Burner

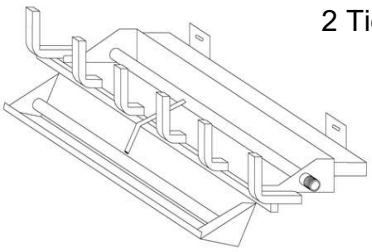

3 Tier Burner

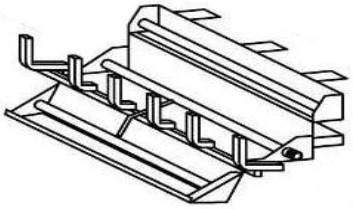

⚠ WARNING:
FIRE OR EXPLOSION HAZARD
Failure to follow safety warnings exactly could result in serious injury, death, or property damage.

- **DO NOT** store or use gasoline or other flammable vapors and liquids in the vicinity of this or any other appliance.
- **What to do if you smell gas**
  - **DO NOT** try to light any appliance.
  - **DO NOT** touch any electrical switch. **DO NOT** use any phone in your building.
  - Leave the building immediately.
  - Immediately call your gas supplier from a neighbor's phone. Follow the gas supplier's instructions.
  - If you cannot reach your gas supplier, call the fire department.
- Installation and service must be performed by a qualified installer, service agency, or the gas supplier.

In the Commonwealth of Massachusetts installation must be performed by a licensed plumber or gas fitter.

See appliance installation manual for additional Commonwealth of Massachusetts requirements.

⚠ Safety Alert Key:

- ***DANGER!*** *Indicates a hazardous situation which, if not avoided will result in death or serious injury.*
- ***WARNING!*** *Indicates a hazardous situation which, if not avoided could result in death or serious injury.*
- ***CAUTION!*** *Indicates a hazardous situation which, if not avoided, could result in minor or moderate injury.*
- ***NOTICE:*** *Used to address practices not related to personal injury.*

Table of Contents

Installation Standard Work Checklist 3

1 Welcome

A. Congratulations 4
B. Limited Lifetime Warranty 5

2 Product Specific and Important Safety Information

A. Appliance Certification 7
B. BTU Specifications and Weight 7
C. Gas Pressures 7
D. High Altitude Installations 7
E. Fuel 7
F. Glass Doors 7
G. California 7
H. Requirements for the Commonwealth of Massachusetts . . 8

3 Important Safety and Operating Information

A. Appliance Safety 9
B. General Operating Parts 9

4 Getting Started

A. Design and Installation Considerations 10
B. Tools and Supplies Needed 10
C. Inspect Appliance and Components 10
D. Check Parts 10
E. Minimum Hearth Dimensions 11
F. Installation Information 11
G. Adequate Combustion Ventilation Air 12
H. Negative Pressure 12

5 Gas Information

A. Fuel Type 14
B. Gas Pressure 14
C. Gas Connection 14
D. Verify Gas Pressure 15

6 Electrical Information

A. Wiring Requirements 16

7 Appliance Installation and Set-up

A. Positioning the Appliance 17
B. On/Off Switch and Remote Control 17
C. Natural Gas Set-up 18
D. Propane (LP) Gas Set-u 19
E. Log Placement 19
F. Before Lighting Appliance 20
G. Flame Appearance 20
H. Initial Use 20

8 Lighting Instructions

A. Intermittent Pilot (IPI) 21

9 Maintenance and Service

A. Maintenance: Frequency and Tasks 22
B. Maintenance Tasks: Qualified Service Technician 22
C. Cleaning and Servicing 23

10 Troubleshooting

A. Frequently Asked Questions 24
B. Troubleshooting 24

11 Service Parts

A. Service Parts 26-31
B. Contact Information 32

► = Contains updated information

Installation Standard Work Checklist

ATTENTION INSTALLER:

Follow this Standard Work Checklist

This standard work checklist is to be used by the installer in conjunction with, not instead of, the instructions contained in this installation manual.

Customer: _____
Lot/Address: _____
_____

Model (circle one):
2TR-IPI-R18-N; 2TR-IPI-R18-P
2TR-IPI-R24-N; 2TR-IPI-R24-P
2TR-IPI-R30-N; 2TR-IPI-R30-P
3TR-IPI-R18-N; 3TR-IPI-R18-P
3TR-IPI-R24-N; 3TR-IPI-R24-P
3TR-IPI-R30-N; 3TR-IPI-R30-P

Date Installed: _____
Location of Fireplace: _____
Installer: _____
Dealer/Distributor Phone #: _____
Serial #: _____

WARNING! Risk of Fire or Explosion! *Failure to install appliance according to these instructions could lead to a fire or explosion.*

	YES	IF NO, WHY?
Gas Log Install Sections 2 and 5		
• Minimum firebox dimensions met	☐	_____
• Fireplace chimney has been cleaned	☐	_____
• Damper stop properly installed	☐	_____
• Verified adequate combustion ventilation air	☐	_____
• Appliance properly positioned and secured	☐	_____
Gas Section 3		
• Proper appliance for fuel type	☐	_____
• Verified inlet and oulet pressures	☐	_____
• Leak check performed	☐	_____
• Verified proper air shutter setting for fuel type	☐	_____
Electrical Section 4		
• Verified switch wires and/or remote control properly installed	☐	_____
Media & Logs Section 5		
• Verified packaging and protective materials removed	☐	_____
• Media and logs installed correctly	☐	_____
• Verified flame appearance	☐	_____
Finishing		
• Verified mantels and wall projections comply with fireplace installation manual requirements.	☐	_____
• Manual bag and contents given to party responsible for use and operation.	☐	_____

Hearth & Home Technologies recommends the following:

- Photographing the installation and copying this checklist for your file.
- That this checklist remain visible at all times on the appliance until the installation is complete.

Comments: Further description of the issues, who is responsible (Installer/ Builder/ Other Trades, etc) and corrective action needed: _____

Comments communicated to party responsible: _____ By: _____ On: _____
(Builder / General Contractor) (Installer) (Date)

1 Welcome

A. Congratulations

Congratulations and thank you for selecting a Hearth & Home Technologies vented gas log set, an elegant and clean alternative to wood burning fireplaces. The gas log set you have selected is designed to provide the utmost in safety, efficiency, and style.

As the owner of a new vented gas log set, you'll want to read and carefully follow all of the instructions contained in this owner's manual. Pay special attention to all cautions and warnings.

This owner's manual should be retained for future reference. We suggest that you keep it with your other important documents and product manuals.

The information contained in this owner's manual, unless noted otherwise, applies to all models and gas control systems noted on the cover page.

Your new vented gas log set will give you years of durable use and trouble-free enjoyment. Welcome to the Hearth & Home family.

Local Dealer Information

Dealer: Fill in your name, address, phone number and email information in the space provided.

Dealer Name: _____

Address: _____

_____

Phone Number: _____

Email: _____

Appliance Information:

Brand: _____ Model Name: _____

Serial Number: _____ Date Installed: _____

Listing Label Information/Location

The model information regarding your specific gas log set can be found on the rating plate usually located in the control area of the gas log set.

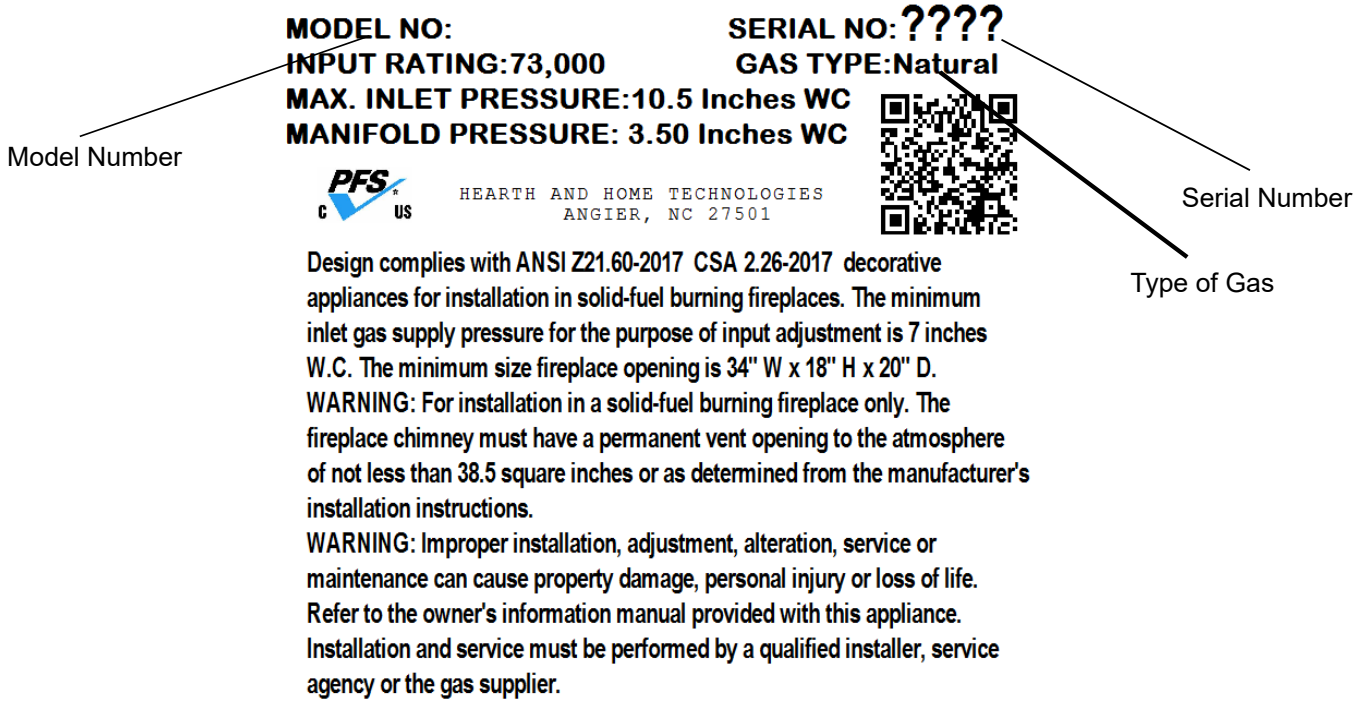

B. Limited Lifetime Warranty

Hearth & Home Technologies LLC

LIMITED WARRANTY

Hearth & Home Technologies LLC ("HHT") extends the following warranty for HHT gas, wood, pellet and electric hearth appliances (each a "Product" and collectively, the "Product(s)") and certain component parts set forth in the table below ("Component Part(s)") that are purchased from a HHT authorized dealer or distributor.

WARRANTY COVERAGE:

HHT warrants that the Products and their Component Parts will be free from defects in materials and workmanship for the applicable period of Warranty coverage set forth in the table below ("Warranty Period"). If a Product or Component Parts are found to be defective in materials or workmanship during the applicable Warranty Period, HHT will, at our discretion, repair the applicable Component Part(s), replace the applicable Component Part(s), or refund the purchase price of the applicable Product(s). The maximum amount recoverable under this Warranty is limited to the purchase price of the Product. This Warranty is transferable from the original purchaser to subsequent owners, but the Warranty Period will not be extended in duration or expanded in coverage for any such transfer. This Warranty is subject to conditions, exclusions, and limitations as described below.

WARRANTY PERIOD:

Warranty coverage begins at the date of installation. In the case of new home constructions, Warranty coverage begins six months after invoice of the final sale of the Product(s) by an independent, authorized HHT dealer or distributor. However, the Warranty coverage shall commence no later than 24 months following the date of Product shipment from HHT, regardless of the installation or purchase date.

Warranty Period		**HHT Manufactured Appliances and Venting**				
Component Parts	Labor	Gas	Pellet	Wood	Electric	Component Parts Covered by this Warranty
1 Year		X	X	X		All parts including handles, external enameled components and other material except as covered by Warranty Conditions, Warranty Exclusions, and Warranty Limitations listed
2 Years					X	All parts except as covered by Warranty Conditions, Warranty Exclusions, and Warranty Limitations listed
			X	X		Glass, Electrical components limited to heating element/igniters, Top feed auger assembly, Blowers, Junction Box, Remotes/Wall switches, linear actuator, power cord, vacuum switch, snap disc, wire harnesses and thermocouple
		X				Electrical components limited to modules, remotes/wall switches, valves, pilots, blowers, junction boxes, wire harnesses, transformers and lights (excluding light bulbs)
		X		X		Cement Refractory Panels, Glass Liner Panels
3 years			X			Firepots, burnpots, Harman mechanical feeders
5 years		X		X		Catalysts, Vented and Vent Free burners and logs
10 years	1 year	X				Burners, logs and metal/fiber refractory components of HHT manufactured fireplaces or stoves, venting due to poor workmanship
10 years	3 years		X	X		Castings, Medallions & Baffles, FlexBurn® System (engine, inner cover, access cover and fireback), Firebox and heat exchanger, HHT Chimney & Terminations, Manifolds
20 years	3 years	X				Firebox and heat exchanger
All purchased replacement parts and optional accessories						
1 Year	None	X	X	X	X	All purchased replacement parts and optional accessories

B. Limited Lifetime Warranty (Continued)

WARRANTY CONDITIONS:

- Because HHT cannot control the quality of any Products sold by unauthorized sellers, this Warranty only covers Products that are purchased through an HHT authorized dealer or distributor unless otherwise prohibited by law; a list of HHT authorized dealers is available on the HHT branded websites.
- This Warranty is only valid while the applicable Product remains at the site of original installation.
- This Warranty is only valid in the country in which the HHT authorized dealer or distributor that sold the applicable Product is authorized to sell applicable Product.
- Contact your installing distributor or dealer for Warranty service. If the installing dealer or distributor is unable to provide necessary parts, contact the nearest HHT authorized dealer or supplier. Additional service fees may apply if you are seeking Warranty service from a dealer other than the dealer from whom you originally purchased the applicable Product.
- No HHT consumer should bear cost of warranty service or costs incurred while servicing warranty claims (i.e., travel, gas, or mileage) when the service is performed within the terms of this Warranty. Check with your dealer or distributor in advance for any costs to you when arranging a warranty call. Travel and shipping charges for parts are not covered by this Warranty.

WARRANTY EXCLUSIONS:

This Warranty does not cover the following:

- Changes in surface finishes as a result of normal use. As a heating appliance, some changes in color of interior and exterior surface finishes may occur. This is not a flaw and is not covered under the Warranty.
- Damage to printed, plated, or enameled surfaces caused by fingerprints, accidents, misuse, scratches, melted items or other external sources and residues left on the plated surfaces from the use of abrasive cleaners or polishes.
- Repair or replacement of parts that are subject to normal wear and tear during the Warranty Period are not covered. These parts include: paint, wood and pellet gaskets, firebricks, wood grates, flame guides, batteries and the discoloration of glass.
- Minor expansion, contraction, or movement of certain parts causing noise. These conditions are normal and complaints related to this noise are not covered by this Warranty.
- Damages resulting from: (1) failure to install, operate, or maintain the applicable Product in accordance with the installation instructions, operating instructions, and listing agent identification label furnished with the applicable Product; (2) failure to install the applicable Product in accordance with local building codes; (3) shipping or improper handling; (4) improper operation, abuse, misuse, continued operation with damaged, corroded or failed components, accident, or improperly/incorrectly performed repairs; (5) environmental conditions, inadequate ventilation, negative pressure, or drafting caused by tightly sealed constructions, insufficient make-up air supply, or handling devices such as exhaust fans or forced air furnaces or other such causes; (6) use of fuels other than those specified in the operation instructions; (7) installation or use of components not supplied with the applicable Product or any other components not expressly authorized and approved by HHT; (8) modification of the appliance not expressly authorized and approved by HHT in writing; and/or (9) interruptions or fluctuations of electrical power supply to the applicable Product.
- Non-HHT venting components, hearth connections or other accessories used in conjunction with the applicable Product.
- Any part of a pre-existing fireplace system in which an insert or a decorative gas applicable Product is installed.
- HHT's obligation under this Warranty does not extend to the Product's capability to heat the desired space. Information is provided to assist the consumer and the dealer in selecting the proper Product for the application. Consideration must be given to the Product location and configuration, environmental conditions, insulation and air tightness of the structure.

This warranty is void if:

- The applicable Product has been over-fired, operated in atmospheres contaminated by chlorine, fluorine, or other damaging chemicals. Over-firing can be identified by, but not limited to, warped plates or tubes, deformation/warping of interior cast iron structure or components, rust colored cast iron, bubbling, cracking and discoloration of steel or enamel finishes.
- The applicable Product is subjected to prolonged periods of dampness or condensation.
- There is any damage to the applicable Product due to water or weather damage which is the result of, but not limited to, improper chimney or venting installation.

LIMITATIONS OF REMEDIES AND LIABILITY:

- **EXCEPT TO THE EXTENT PROVIDED BY LAW, HHT MAKES NO EXPRESS WARRANTIES OTHER THAN THE WARRANTY SPECIFIED HEREIN. The owner's exclusive remedy and HHT's sole obligation under this Warranty or in contract, tort or otherwise, shall be limited to, at HHT's sole option, replacement of the Component Part(s), repair of the Component Part(s), or refund of the original purchase price of the applicable Product(s). In no event will HHT be liable for any incidental or consequential damages caused by defects in the applicable Product. Some States do not allow the exclusion or limitation of incidental or consequential damages, so the above limitation or exclusion may not apply to you. This Warranty gives you specific legal rights and you may also have other rights which vary from State to State. THE DURATION OF ANY IMPLIED WARRANTY IS LIMITED TO DURATION OF THE EXPRESSED WARRANTY SPECIFIED ABOVE FOR THE APPLICABLE PRODUCT. Some States do not allow limitations on how long an implied warranty lasts, so the above limitation may not apply to you.**

2 Product Specific and Important Safety Information

A. Appliance Certification

MODEL(S):	2TR-IPI-R18-N; 2TR-IPI-R18-P 2TR-IPI-R24-N; 2TR-IPI-R24-P 2TR-IPI-R30-N; 2TR-IPI-R30-P 3TR-IPI-R18-N; 3TR-IPI-R18-P 3TR-IPI-R24-N; 3TR-IPI-R24-P 3TR-IPI-R30-N; 3TR-IPI-R30-P
LABORATORY:	PFS
TYPE:	Vented Gas Log Set
STANDARD:	ANSI Z21.60-2017 • CSA 2.26-2017 Decorative gas appliances for installation in solid-fuel burning fireplaces

This product is listed to ANSI standards for "Vented Gas Log Sets" and applicable sections of "Gas Burning Heating Appliances for Manufactured Homes" and "Gas Fired Appliances for Use at High Altitude."

NOTICE: *This installation must conform with local codes. In the absence of local codes you must comply with the National Fuel Gas Code, ANSI Z223.1-latest edition in the U.S.A.*

B. BTU Specifications and Weight

Models	Max input (BTU/hr)	Top Burner Orficies	Middle Burner Orficies	Bottom Burner Orficies	Weight (lbs.)
2TRIPI18-N	69,000	.073" (1.85mm)	N/A	0.11" (2.79mm)	30 lbs
2TRIPI18-P	60,000	.052" (1.32mm)	N/A	.059" (1.51mm)	36 lbs
2TRIPI24-N	73,000	.07" (1.78mm)	N/A	.0147" (3.73mm)	52 lbs
2TRIPI24-P	61,000	0.55" (1.39mm)	N/A	.073" (1.85mm)	45 lbs
2TRIPI30-N	80,000	0.11" (2.79mm)	N/A	.177" (4.5mm)	65 lbs
2TRIP30I-P	70,000	.059" (1.51mm)	N/A	.081" (2.05mm)	54 lbs
3TRIPI18-N	76,000	.081" (2.05mm)	.106" (2.70mm)	0.98" (2.49mm)	49 lbs
3TRIPI18--P	74,000	.04" (1.02mm)	.07" (1.78mm)	.059" (1.51mm)	42 lbs
3TRIPI24-N	88,000	.094" (2.37mm)	.014" (3.57mm)	.015" (3.86mm)	62 lbs
3TRIPI24-P	80,000	.64" (1.61mm)	.079" (1.99mm)	.067" (1.70mm)	51 lbs
3TRIPI30-N	92,000	.161" (4.29mm)	.177" (4.5mm)	.194" (4.15mm)	83 lbs
3TRIP30I-P	82,000	.047" (1.193mm)	.079" (1.99mm)	.067" (1.70mm)	62 lbs

NOT INTENDED FOR USE AS A PRIMARY HEAT SOURCE. This appliance is tested and approved as either supplemental room heater or as a decorative appliance. It should not be factored as primary heat in residential heating calculations.

C. Gas Pressures

	Natural	Propane (LP)
Inlet Minimum	5.0” wc	11.0” wc
Inlet Maximum	10.0” wc	13.0” wc
Manifold Pressure	3.5” wc	10.0” wc

NATURAL GAS: An external regulator is required to reduce supply pressure to a maximum of 10.0” wc.
PROPANE/LP: An external regulator is required to reduce supply pressure to a maximum of 13.0” wc.

D. High Altitude Installations

NOTICE: *If the heating value of the gas has been reduced, these rules do not apply. Check with your local gas utility or authorities having jurisdiction.*

When installing above 2000 feet elevation:

- In the USA: Reduce input rate 4% for each 1000 feet above 2000 feet.
- In CANADA: Input ratings are certified without a reduction of input rate for elevations up to 4500 feet (1370 m) above sea level. Please consult provincial and/ or local authorities having jurisdiction for installations atelevations above 4500 feet (1370 m).Check with your local gas utility to determine proper orifice size.
- Check with your local gas utility to determine proper orifice size

E. Fuel

This appliance must not be used to burn solid fuel.

F. Glass Doors

This appliance must NOT be operated with glass doors in the closed position.

G. California

⚠ **WARNING!** This product and the fuels used to operate this product (liquid propane or natural gas), and the products of combustion of such fuels, can expose you to chemicals including benzene, which is known to the State of California to cause cancer and reproductive harm. For more information go to: www.P65Warnings.ca.gov.

H. Requirements for the Commonwealth of Massachusetts

For all side wall horizontally vented gas fueled equipment installed in every dwelling, building or structure used in whole or in part for residential purposes, including those owned or operated by the Commonwealth and where the side wall exhaust vent termination is less than seven (7) feet above finished grade in the area of the venting, including but not limited to decks and porches, the following requirements shall be satisfied:

Installation of Carbon Monoxide Detectors

At the time of installation of the side wall horizontal vented gas fueled equipment, the installing plumber or gas fitter shall observe that a hard wired carbon monoxide detector with an alarm and battery back-up is installed on the floor level where the gas equipment is to be installed. In addition, the installing plumber or gas fitter shall observe that a battery operated or hard wired carbon monoxide detector with an alarm is installed on each additional level of the dwelling, building or structure served by the side wall horizontal vented gas fueled equipment. It shall be the responsibility of the property owner to secure the services of qualified licensed professionals for the installation of hard wired carbon monoxide detectors.

In the event that the side wall horizontally vented gas fueled equipment is installed in a crawl space or an attic, the hard wired carbon monoxide detector with alarm and battery back-up may be installed on the next adjacent floor level.
In the event that the requirements of this subdivision can not be met at the time of completion of installation, the owner shall have a period of thirty (30) days to comply with the above requirements; provided, however, that during said thirty (30) day period, a battery operated carbon monoxide detector with an alarm shall be installed.

Approved Carbon Monoxide Detectors

Each carbon monoxide detector as required in accordance with the above provisions shall comply with NFPA 720 and be ANSI/UL 2034 listed and IAS certified.

Signage

A metal or plastic identification plate shall be permanently mounted to the exterior of the building at a minimum height of eight (8) feet above grade directly in line with the exhaust vent terminal for the horizontally vented gas fueled heating appliance or equipment. The sign shall read, in print size no less than one-half (1/2) in. in size, **"GAS VENT DIRECTLY BELOW. KEEP CLEAR OF ALL OBSTRUCTIONS".**

Inspection

The state or local gas inspector of the side wall horizontally vented gas fueled equipment shall not approve the installation unless, upon inspection, the inspector observes carbon monoxide detectors and signage installed in accordance with the provisions of 248 CMR 5.08(2)(a)1 through 4.

Exemptions

The following equipment is exempt from 248 CMR 5.08(2)(a)1 through 4:

- The equipment listed in Chapter 10 entitled "Equipment Not Required To Be Vented" in the most current edition of NFPA 54 as adopted by the Board; and
- Product Approved side wall horizontally vented gas fueled equipment installed in a room or structure separate from the dwelling, building or structure used in whole or in part for residential purposes.

MANUFACTURER REQUIREMENTS

Gas Equipment Venting System Provided

When the manufacturer of Product Approved side wall horizontally vented gas equipment provides a venting system design or venting system components with the equipment, the instructions provided by the manufacturer for installation of the equipment and the venting system shall include:

- Detailed instructions for the installation of the venting system design or the venting system components; and
- A complete parts list for the venting system design or venting system.

Gas Equipment Venting System NOT Provided

When the manufacturer of a Product Approved side wall horizontally vented gas fueled equipment does not provide the parts for venting the flue gases, but identifies "special venting systems", the following requirements shall be satisfied by the manufacturer:

- The referenced "special venting system" instructions shall be included with the appliance or equipment installation instructions; and
- The "special venting systems" shall be Product Approved by the Board, and the instructions for that system shall include a parts list and detailed installation instructions.

A copy of all installation instructions for all Product Approved side wall horizontally vented gas fueled equipment, all venting instructions, all parts lists for venting instructions, and/or all venting design instructions shall remain with the appliance or equipment at the completion of the installation.

See Gas Connection section for additional Commonwealth of Massachusetts requirements.

3 Important Safety and Operating Information

A. Appliance Safety

⚠ ***WARNING! DO NOT operate appliance before reading and understanding operating instructions.*** *Failure to operate appliance according to operating instructions could cause fire or injury.*

⚠ DANGER

- Keep children away.
- CAREFULLY SUPERVISE children in same room as appliance.
- Alert children and adults to hazards of high temperatures.

High temperatures may ignite clothing or other flammable materials.

- Clothing, furniture, draperies, and other flammable materials must not be placed on or near the appliance.

Young children should be carefully supervised when they are in the same room as the appliance. Toddlers, young children and others may be susceptible to accidental contact burns.

- A physical barrier is recommended if there are at risk individuals in the house.
- To restrict access to a appliance, install an adjustable safety gate to keep toddlers, young children and other at risk individuals out of the room and away from hot surfaces.
- Install a switch lock or a wall/remote control with child protection lockout feature.
- Keep remote controls out of reach of children.
- Never leave children alone near a hot appliance, whether operating or cooling down.
- Teach children to NEVER touch the appliance.
- Consider not using the appliance when children will be present.

Contact your dealer for more information, or visit: www.hpba.org/safety-information.

To prevent unintended operation when not using your appliance for an extended period of time (summer months, vacations, trips, etc):

- Remove batteries from remote controls.
- Turn off gas shutoff valve.

Clear Space

⚠ ***WARNING! DO NOT*** *place combustible objects in front of the appliance. High temperatures may start a fire. See Figure 3.1.*

Avoid placing candles, electronics and other heat-sensitive objects on mantel or hearth. Heat may damage these objects.

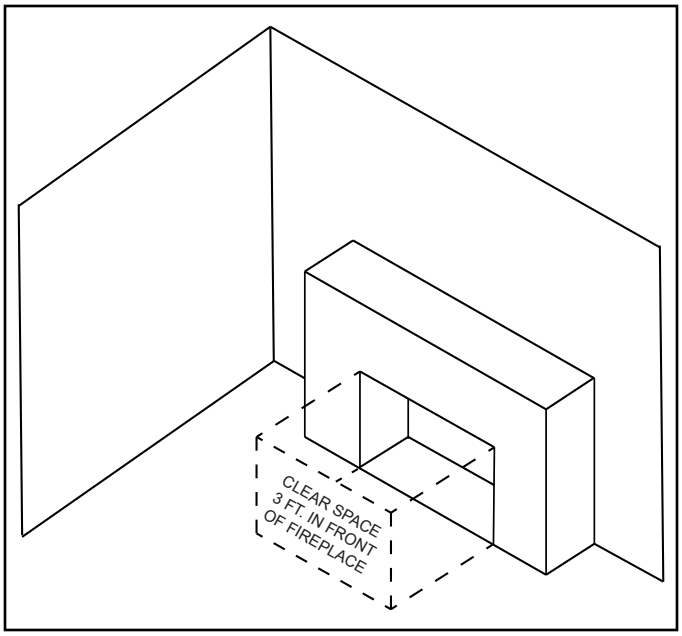

Figure 3.1 Clear Space Requirements

Over Firing

The appliance is considered to be over firing if the flames are contacting the top of the firebox. Call a qualified service technician to service the appliance.

B. General Operating Parts

Figure 3.2 references the general operating parts of a typical installation.

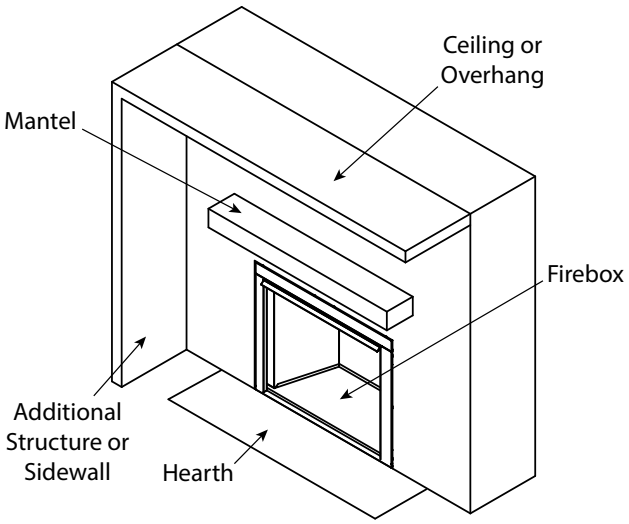

Figure 3.2 General Operating Parts

4 Getting Started

A. Design and Installation Considerations

Installation MUST comply with local, regional, state and national codes and regulations. Consult insurance carrier, local building inspector, fire officials or authorities having jurisdiction over restrictions, installation inspection and permits.

Before installing, determine the following:

- Where burner assembly and log set are to be installed.
- Gas supply piping.
- Whether optional accessories, devices such as a wall switch or remote control are desired.
- Approved wood burning or masonry fireplace.

Installation and service of this appliance should be performed by qualified personnel. Hearth & Home Technologies recommends HHT Factory Trained or NFI certified professionals.

hearthED FACTORY TRAINING Fuel Your Fire

NFI NATIONAL FIREPLACE INSTITUTE A CERTIFICATION AGENCY

Improper installation, adjustment, alteration, service or maintenance can cause injury or property damage. For assistance or additional information, consult a qualified service technician, service agency or your dealer.

B. Tools and Supplies Needed

Before beginning the installation be sure that the following tools and building supplies are available.

- Tape measure
- Gloves
- Voltmeter
- Manometer
- Phillips screwdriver
- Safety glasses
- Flat blade screwdriver
- Non-corrosive leak check solution
- Drill and bits
- External regulator (for propane/LP only & 1/2 psi Natural gas system)
- Piping which complies with local codes
- Pipe sealant approved for use with propane/LP (Resistant to sulfur compounds)
- Manual shutoff valve
- Sediment trap
- Tee joint
- Pipe wrench
- 3/4” & 7/16” wrench

⚠ CAUTION

Gloves are recommended when handling refractory and logs to prevent skin irritation from loose fibers. Logs are fragile; handle with care.

C. Inspect Appliance and Components

- Carefully remove the applaince and components from the packaging.
- Attached to the appliance are tags identifying the manufacturer, serial number, model number. Including log set size, BTU/hr ratings and gas type.
- Review the attached tags before proceeding. Ensure that all minimum fireplace dimension requirements are achieved using Figure 4.1.
- Ensure the gas type provided in the fireplace coincide with the gas type marked on the tag.
- Logs are packaged and sold separately.
- Report to your dealer any parts damaged in shipment.
- Read all of the instructions before starting the installation. Follow these instructions carefully during the installation process to ensure maximum safety and benefit.

⚠ ***WARNING! Risk of Fire or Explosion!*** *Damaged parts could impair safe operation.* ***DO NOT*** *install damaged, incomplete or substitute components. Keep appliance dry.*

Hearth & Home Technologies disclaims any responsibility for, and the warranty will be voided by, the following actions:

- Installation and use of any damaged appliance.
- Modification of the appliance.
- Installation other than as instructed by Hearth & Home Technologies.
- Installation and/or use of any component part not approved by Hearth & Home Technologies.

Any such action may cause a fire hazard.

⚠ ***WARNING! Risk of Fire, Explosion or Electric Shock! DO NOT*** *use this appliance if any part has been under water. Call a qualified service technician to inspect the appliance and to replace any part of the control system and/or gas control which has been under water.*

D. Check Parts

Verify contents to ensure you have received all parts.

You should have the following:

- Log Set (Sold Seperately)
- Vented Gas Log Burner / Grate Assembly
- RCB Remote Control
- Lava Rock
- Rock Wool
- Sand (NG Only)
- Vermiculite
- Installation Instructions
- Flex Line & Pipe Fittings
- Damper Clamp

E. Minimum Hearth Dimensions

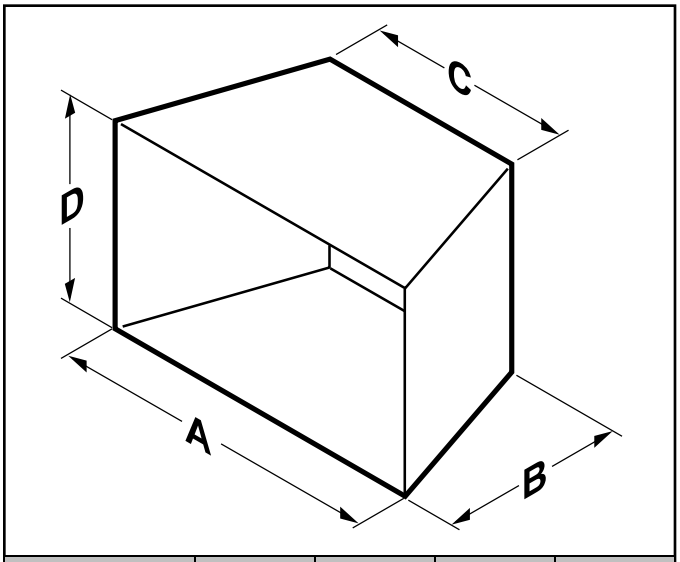

Models	A	B	C	D
2TR-IPI-R18-N 2TR-IPI-R18-P	27.00” (686 mm)	16.00” (406 mm)	19.00” (483 mm)	18.00” (457 mm)
2TR-IPI-R24-N 2TR-IPI-R24-P	34.00” (864 mm)	20.00” (508 mm)	22.00” (559 mm)	18.00” (457 mm)
2TR-IPI-R30-N 2TR-IPI-R30-P	40.00” (1016 mm)	20.00” (508 mm)	29.00” (737 mm)	18.00” (457 mm)
3TR-IPI-R18-N 3TR-IPI-R18-P	32.00” (813 mm)	23.00” (584 mm)	21.00” (533 mm)	22.00” (559 mm)
3TR-IPI-R24-N 3TR-IPI-R24-P	34.00” (864 mm)	23.00” (584 mm)	22.00” (559 mm)	22.00” (559 mm)
3TR-IPI-R30-N 3TR-IPI-R30-P	40.00” (1016 mm)	23.00” (584 mm)	29.00” (737 mm)	22.00” (559 mm)

Figure 4.1 Minimum Hearth Dimensions

F. Installation Information

⚠ WARNING

This appliance is for installation only in a solid-fuel burning masonry or UL127 factory-built fireplace. It has been design certified for these installations.

Note: Use manufacturer’s installation and clearance requirements as defined in their manual.

BEFORE INSTALLING THE APPLIANCE:

- Turn off gas supply to masonry fireplace or manufactured wood burning firebox.
- Have the fireplace floor and chimney professionally cleaned to remove ash, soot, creosote or other obstructions. Have this cleaning performed annually after installation.
- Seal any fresh air vents or ash clean-out doors located on floor or wall of fireplace. If not, drafting may cause pilot outage or sooting. Use a heat-resistant sealant.

⚠ WARNING

Do not install the applaince:

- **Where curtains, furniture, clothing, or other flammable objects are less than 36" from the front of the heater.**
- **In high traffic areas.**
- **In windy or drafty areas.**

Damper Stop Installation

A damper stop is provided with this appliance. The damper stop MUST be installed to prevent full closure of the fireplace damper blade and provide a minimum flue opening. See Table 4.1.

Factory Built Fireplace: Position damper stop on the top half of the damper blade, slide stop towards the center of the damper blade to create an interferance with the bead on the flue collar and tighten bolt. Either side of the damper blade is acceptable. See Figure 4.2.

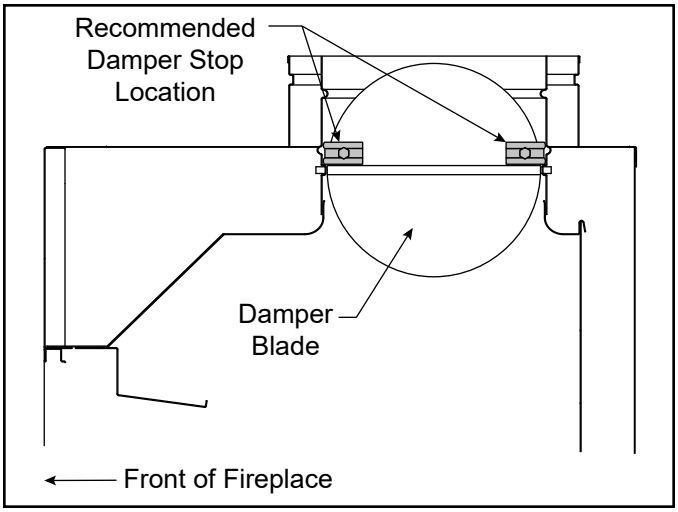

Figure 4.2 Factory Built Fireplace Example

Note: Should the stop not fit, or provide the required permanent opening from the table have the damper blade cut to provide minimum permanent opening or a permanent stop installed.

⚠ WARNING

Improper installation or use of the appliance can cause serious injury or death from fire, burns, explosion or carbon monoxide poisoning.

Damper Stop Installation (cont.)

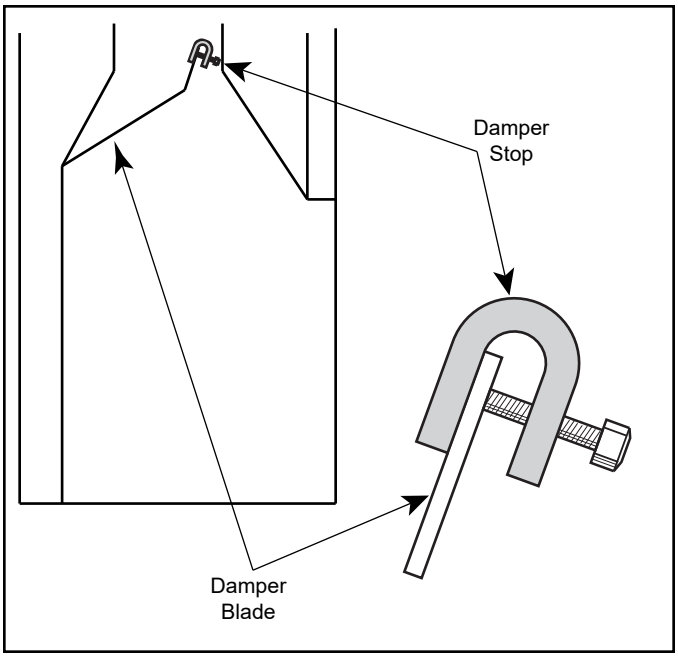

Figure 4.3 Masonary Fireplace Example

⚠ WARNING

The fireplace and gas logs function as a system. If the fireplace is spilling into the room (check with a match or smoke stick), reposition the damper clamp until a positive draft is obtained, by opening the damper. If negative pressure in the home prevents having a positive draft contact your dealer.

For Massachusetts Residents Only

Installation of this vented gas log set in the Commonwealth of Massachusetts requires the damper be permanently removed or welded in the fully open position. In addition, a naturally vented gas log may not be installed in a bedroom or bathroom in the Commonwealth of Massachusetts.

G. Adequate Combustion Ventilation Air

This appliance shall not be installed in a confined space or unusually tight construction unless provisions are provided for adequate combustion and ventilation air.

The National Fuel Gas Code, (ANSI Z223.1/NFPA54), defines a confined space as a space whose volume is less than 50 cubic feet per 1,000 BTU per hour (4.8m^3 per kw) of the aggregate input rating of all appliances installed in that space. Rooms communicating directly with the space in which the appliances are installed, through openings not furnished with doors, are considered a part of a confined space.

⚠ WARNING

If the area in which the appliance may be operated does not meet the required volume for indoor combustion air, combustion and ventilation air shall be provided by one of the methods described in the *National Fuel Gas Code, ANSI Z223.1/NFPA 54*, the *International Fuel Gas Code* or applicable local codes.

H. Negative Pressure

Negative pressure results from the imbalance of air available for the fireplace to operate properly. Possible causes for this imbalance include:

- Exhaust fans (kitchen, bath, etc.)
- Range hoods
- Combustion air requirements for furnaces, water heaters and other combustion appliances
- Clothes dryers
- Location of return-air vents to furnace or air conditioning
- Imbalances of the HVAC air handling system
- Upper level air leaks: recessed lighting, attic hatch opening, duct leaks.

Minimum Flue Opening

Free opening area of chimney damper for venting combustion products (factory-built fireplaces)

Chimney Height	2TR-IPI-R18-N	2TR-IPI-R18-P	2TR-IPI-R24-N	2TR-IPI-R24-P	2TR-IPI-R30-N	2TR-IPI-R30-P
10 ft	28.3	22.1	Not Allowed	44.2	Not Allowed	44.2
15 ft	21.2	17.3	38.5	32.2	38.5	32.2
20 ft	18.1	14.5	31.2	26.4	31.2	26.4
25 ft	15.9	12.6	27.3	22.9	27.3	22.9
30 ft	14.5	11.3	24.6	20.4	24.6	20.4
35 ft	13.2	10.8	22.1	18.9	22.1	18.9
40 ft	12.6	10.2	20.4	18.1	20.4	18.1

Free opening area of chimney damper for venting combustion products (factory-built fireplaces)

Chimney Height	3TR-IPI-R18-N	3TR-IPI-R18-P	3TR-IPI-R24-N	3TR-IPI-R24-P	3TR-IPI-R30-N	3TR-IPI-R30-P
10 ft	Not Allowed	Not Allowed	Not Allowed	Not Allowed	Not Allowed	Not Allowed
15 ft	45.4	38.5	45.4	38.5	Not Allowed	45.4
20 ft	37.4	31.2	37.4	31.2	43.0	37.4
25 ft	31.2	27.3	31.2	27.3	36.3	31.2
30 ft	28.3	24.6	28.3	24.6	33.2	28.3
35 ft	25.5	22.1	25.5	22.1	30.2	25.5
40 ft	23.8	20.4	23.8	20.4	27.3	23.8

Free opening area of chimney damper for venting combustion products (masonary-built fireplaces)

Chimney Height	2TR-IPI-R18-N	2TR-IPI-R18-P	2TR-IPI-R24-N	2TR-IPI-R24-P	2TR-IPI-R30-N	2TR-IPI-R30-P
6 ft	41.7	33.8	64.0	56.6	64.0	56.6
8 ft	38.7	31.2	59.7	52.4	59.7	52.4
10 ft	35.2	28.7	54.3	48.2	54.3	48.2
15 ft	32.0	26.1	48.8	43.2	48.8	43.2
20 ft	28.8	23.7	44.4	39.8	44.4	39.8
30 ft	26.5	21.6	40.3	35.9	40.3	35.9

Free opening area of chimney damper for venting combustion products (masonary-built fireplaces)

Chimney Height	3TR-IPI-R18-N	3TR-IPI-R18-P	3TR-IPI-R24-N	3TR-IPI-R24-P	3TR-IPI-R30-N	3TR-IPI-R30-P
6 ft	71.4	64.0	71.4	64.0	78.8	71.4
8 ft	66.9	59.7	66.9	59.7	74.1	66.9
10 ft	60.2	54.3	60.2	54.3	66.1	60.2
15 ft	54.1	48.8	54.1	48.8	59	54.1
20 ft	49.1	44.4	49.1	44.4	53.8	49.1
30 ft	44.5	40.3	44.5	40.3	48.6	44.5

Table 4.1

5 Gas Information

⚠ WARNING

Use new black iron or steel pipe. Internally tinned copper or copper tubing can be used per National Fuel Code, providing gas meets hydrogen sulfide limits, and where permitted by local codes. Gas piping system must be sized to provide minimum inlet pressure (Listed on Data Plate) at the maximum flow rate (BTU/hr). Undue pressure loss will occur if the pipe is too small.
A manual shutoff valve must be installed upstream of the appliance. Union tee and plugged 1/8" NPT pressure tapping point should be installed upstream of the appliance.

A. Fuel Type

The gas supply must be the same as stated on the appliance rating plate. If the gas supply is different, DO NOT INSTALL THE APPLIANCE. Contact your dealer for the correct model.

⚠ WARNING

CHECK GAS TYPE: The gas supply must be the same as stated on the appliance rating plate. If the gas supply is different, DO NOT INSTALL THE APPLIANCE. Contact your dealer for the correct model.

B. Gas Pressure

- Optimum appliance performance requires proper input pressures.
- Gas line sizing requirements will be determined in ANSI Z223.1 National Fuel Gas Code in the USA.
- Pressure requirements are:

	Natural	Propane (LP)
Inlet Minimum	5.0" wc	11.0" wc
Inlet Maximum	10.0" wc	13.0" wc
Manifold Pressure	3.5" wc	10.0" wc

⚠ WARNING

Fire Risk!
Explosion Hazard!
High pressure will damage valve!

- **Disconnect gas supply piping BEFORE pressure testing gas line at test pressures above 1/2 psig.**
- **Close the manual shutoff valve BEFORE pressure testing gas line at test pressures equal to or less than 1/2 psig.**

Note: Have the gas supply line installed in accordance with local codes, if any. If not, follow ANSI Z223.1. Installation should be done by a qualified installer approved and/or licensed as required by the locality (In the Commonwealth of Massachusetts installation must be performed by a licensed plumber or gas fitter).

Note: A listed (and Commonwealth of Massachusetts approved) 1/2 in. (13 mm) T-handle manual shut-off valve must be installed upstream of the appliance.

IMPORTANT: Install manual shutoff valve in an accessible location. The manual shutoff valve is for turning on or shutting off the gas to the appliance.

⚠ ***WARNING! Risk of Fire or Explosion!*** *High pressure will damage valve. Low pressure could cause explosion.*

- Verify inlet pressures. Verify minimum pressures when other household gas appliances are operating.
- Install regulator upstream of valve if line pressure is greater than 1/2 psig.

C. Gas Connection

A 3/8 in. flared fitting has been installed on the gas valve inlet at the factory. Ensure fittings are of the appropriate size and type on the gas line connection. If the tubing has to be cut to length be sure to use the proper cutting and flaring tool. Also, be careful not to crimp the tubing while bending. If the tubing becomes crimped, do not use for installation.

IMPORTANT: When tightening up the joint to the valve, hold the valve securely to prevent movement.

Test all gas joints from the gas meter to the appliance valve for leaks using a gas analyzer or soap and water solution after completing connection. DO NOT USE AN OPEN FLAME. Check the gas pressure with the appliance burning.

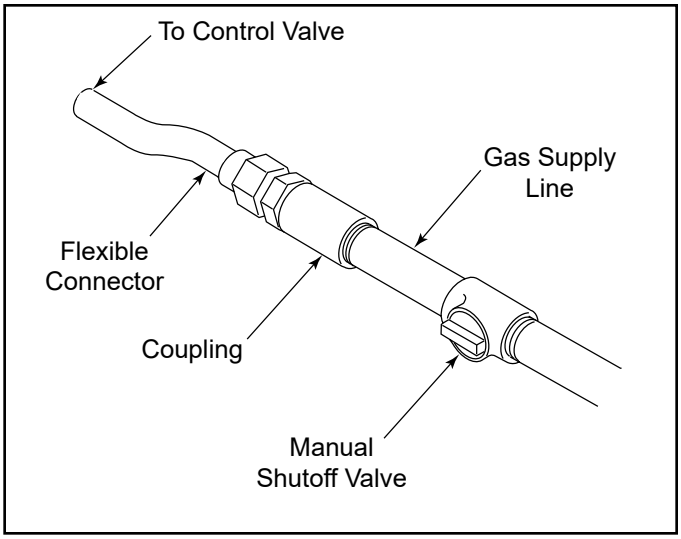

Figure 5.1 Gas Connection

D. Verify Gas Pressure

The valve regulator controls the burner pressure. Gas pressure must be verified at both the inlet and outlet pressure test ports.

1. Turn captured screw counterclockwise two or three turns. See Figure 5.2.
2. Place tubing from pressure gauge over test port.
3. After taking pressure readings, be sure and turn captured screw clockwise firmly to re-seal. Do not over torque.
4. Check for gas leaks.

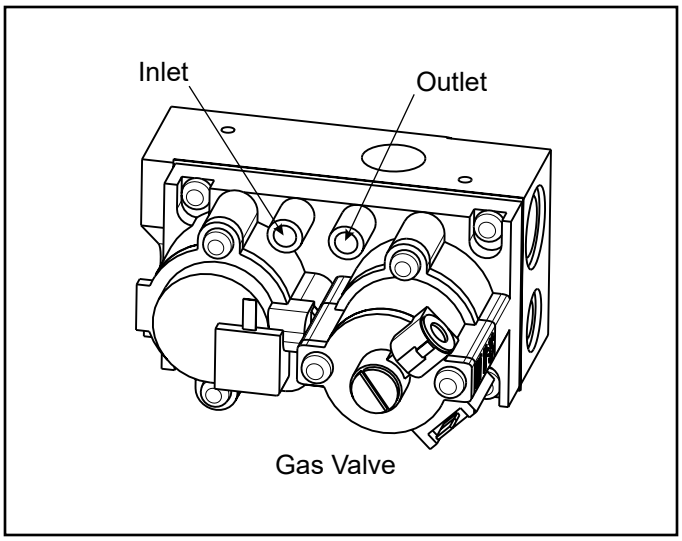

Figure 5.2 Pressure Test Ports

6 Electrical Information

A. Wiring Requirements

⚠ ***WARNING! Risk of Shock or Explosion! DO NOT** wire 110-120 VAC to the valve. Incorrect wiring will damage controls.*

- The intermittent pilot ignition system (IPI) on the Stadium series gas log set comes standard with an integrated battery pack, that holds (2) D size batteries.
- The appliance does NOT require 110 VAC for operation. If the vented fireplace/firebox the appliance is installed in is electrically wired, it must be wired and grounded in accordance with local codes or, in the absence of local codes, with **National Electric Code ANSI/NFPA 70-latest edition**.
- An ON/OFF Switch and Remote Control are supplied with the appliance. The Remote Control can be incorporated into this system by connecting to the remote switch wires as shown. See Figure 6.1

NOTE: The use of a thermostat is prohibited in vented log installations.

⚠ ***WARNING! Risk of Shock!** Label all wires prior to disconnection when servicing controls. Wiring errors can cause improper and dangerous operation. Verify proper operation after servicing. Replace damaged wire with type 105º C rated wire. Wire must have high temperature insulation.*

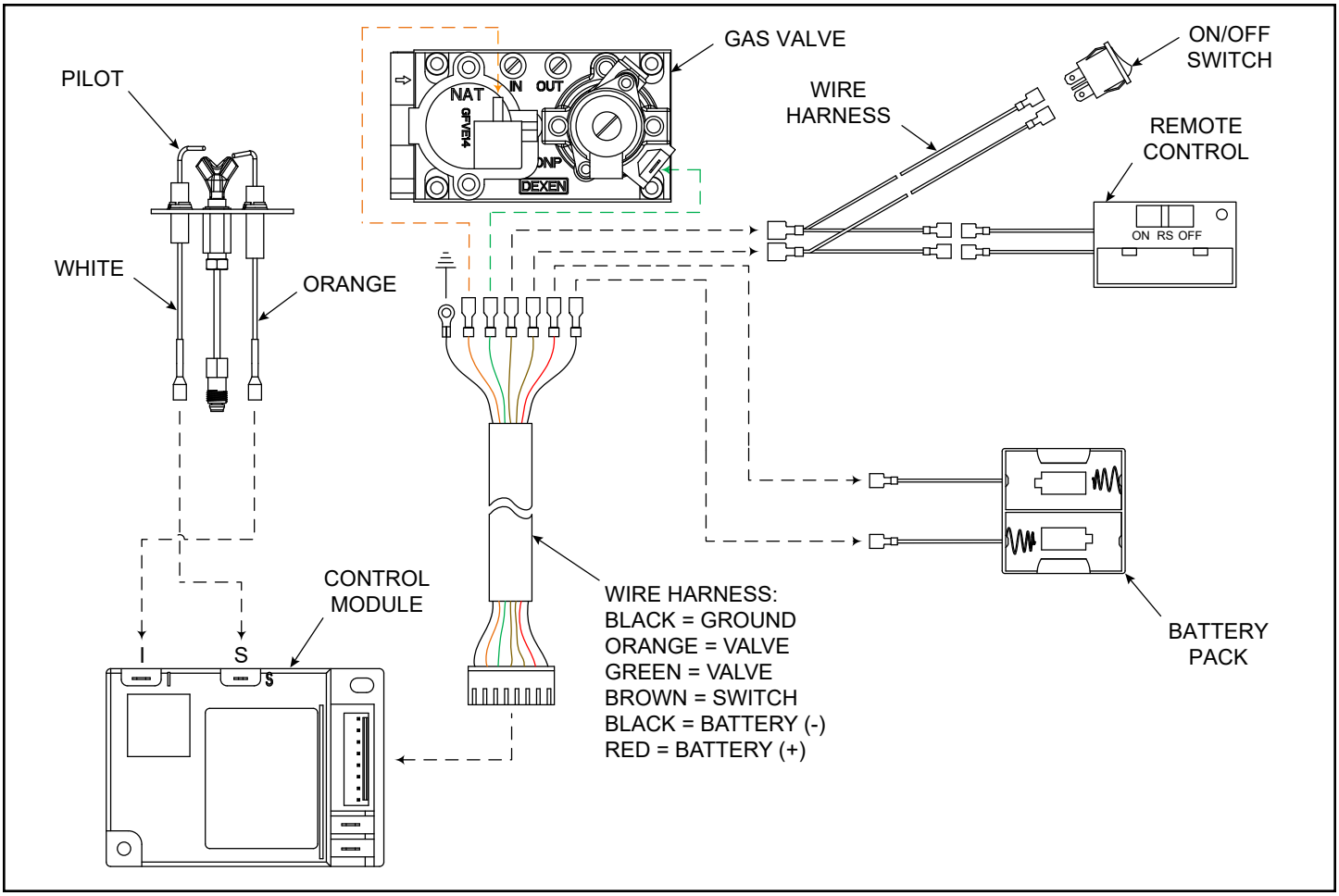

Figure 6.1 IPI Wiring Diagram

7 Appliance Installation and Set-up

⚠ WARNING

You must secure the gas log appliance to the fireplace floor. If not, the entire unit may move when you adjust the controls. Movement of unit may cause shifting of the gas logs which leads to sooting and improper burning. Grate movement could cause a gas leak.

A. Positioning the Appliance

The appliance is assembled with the gas controls installed at the factory, and is designed to connect the 3/8” supply line before making final placement inside the fireplace.

1. Place the appliance towards the rear and center of the fireplace and connect the gas line.
2. Tighten incoming gas connection. Follow instructions in Section 5.C Gas Connection to check for gas leaks.
3. Center the gas log appliance in the fireplace. Make certain the entire appliance and grate sit inside the front edge of the fireplace. Ensure the appliance is positioned correctly, side to side and front to back.
4. This appliance includes a battery box which holds 2 “D” size batteries. The battery box should be placed in the right front corner of your fireplace and covered with the log cover as shown in Figure 7.1.

Note: Proper installation of the appliance is essential to prevent movement of the gas logs and controls during operation.

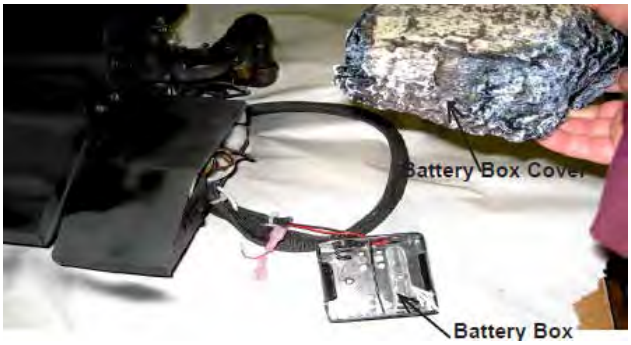

Figure 7.1 Batteries and Log Cover

B. On/Off Switch and Remote Control

This vented log set comes supplied with an On/Off Switch and a battery powered remote control kit.

- The On/Off switch is located on the front right side of the burner assembly as shown in Figure 7.2.
- The supplied remote control can be incorporated with this system by connecting the remote wires to the connection wires shown in Figure 7.2.

Note: Position the remote control receiver in a convenient location, which allows for safe operation of the appliance and replacement of batteries, as necessary.

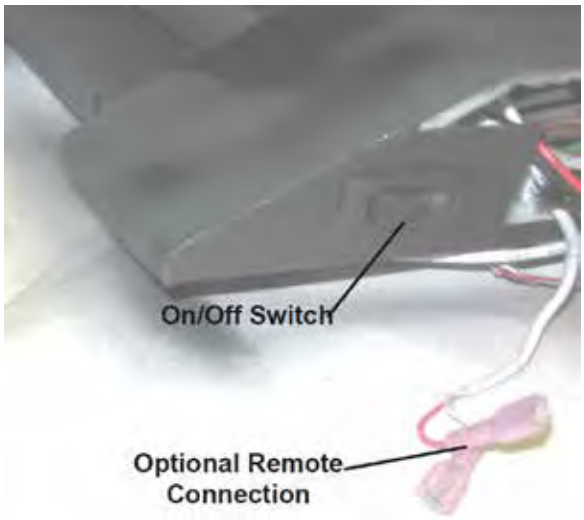

Figure 7.2 On/Off Switch and Remote Connection

C. Natural Gas Set-up

Burner Media Placement:

1. Pour sand into each burner pan to the point where the burner pipe is covered.
2. Level the sand from side to side to ensure an even flame pattern. At this point the pans should be half full. See Figure 7.3.

Note: Be sure NOT to cover Pilot Assembly.

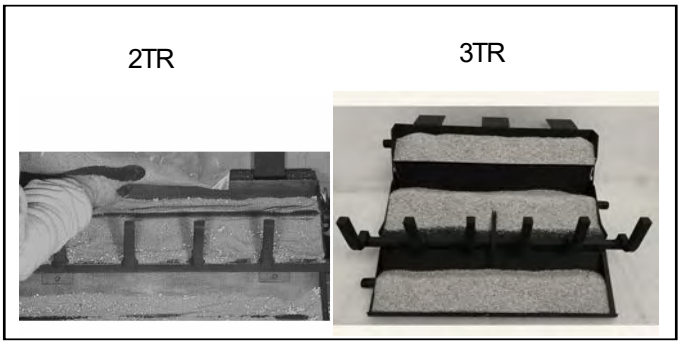

Figure 7.3 Sand Placement

3. Pour vermiculite over the sand in each pan until they are full. See Figure 7.4.

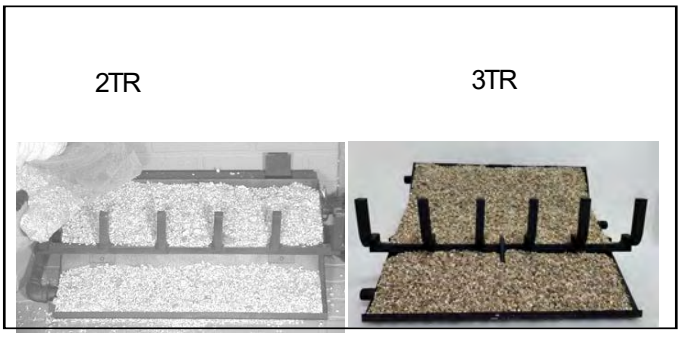

Figure 7.4 Vermiculite Placement

4. Lightly place dime-size pieces of rock wool evenly all over the vermiculite to achieve a glowing ember effect. See Figure 7.5.

Note: For best results, do not pack down the rock wool. The placement of rock wool can have an effect on flame pattern and may need to be adjusted to achieve a desired appearance.

5. Inspect the Pilot Assembly to ensure it is clear of any sand, vermiculite or rock wool.

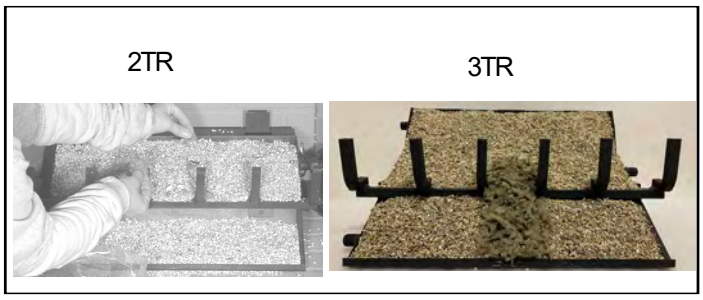

Figure 7.5 Rock Wool Placement

6. Remove the Platinum Bright Embers™ from the package. For optimum performance peel each piece apart in layers and lightly place on top of the rock wool where the flame is blue. This will achieve the desired realism.

Note: Gas burns at the point of the least resistance. In the case of an uneven flame pattern it may be necessary to adjust the media material in the pans, using an object such as a screwdriver, to achieve the desired effect.

DO NOT:

- Pile the glowing embers too heavily on the pan.
- Cover the pilot with glowing embers

Decorative Lava Rock Placement:

1. Place desired amount of decorative lava rock on the floor of the fireplace.
2. Ensure all controls and switches are unobstructed after decorative lava rock has been placed.

DO NOT:

- Place decorative lava rock on the burner, pilot or logs.
- Allow decorative lava rock to come in contact with the flames. Lava rocks may contain moisture which, when heated, may cause it to popout during operation.

⚠ WARNING

The positioning of the grate, logs and media is critical to the safe and clean operation of this appliance. Sooting and other problems may result if the logs are not properly positioned in the appliance. Never add additional logs or embellishments such as pine cones. Only use the logs and media supplied with the unit.

Failure to position the parts in accordance with installation instructions or failure to use only parts specifically approved for this appliance may result in property damage or personal injury.

D. Propane (LP) Gas Set-up

⚠WARNING

An explosion could occur if a connection is made directly to an unregulated propane (LP) tank.

Burner Media Placement:

1. Pour vermiculite into each burner pan to the point where each pan is completely full.
2. Level the vermiculite from side to side to ensure an!even flame pattern. See Figure 7.6.

Note: Be sure NOT to cover Pilot Assembly.

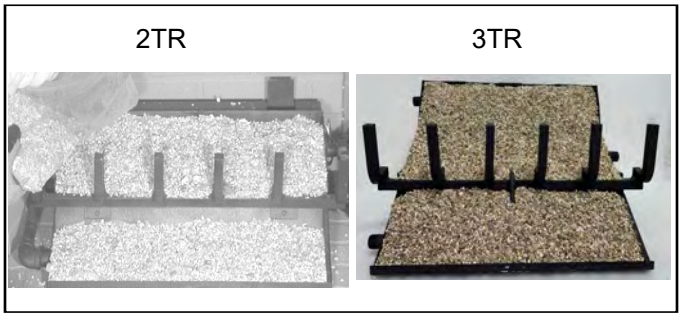

Figure 7.6 Vermiculite Placement

⚠WARNING

Pour vermiculite into each burner pan (LP) to the point where each pan is completely full. Failure to do so may cause the lighting to be delayed and this can be dangerous.

3. Lightly place dime-size pieces of rock wool evenly all over the vermiculite to achieve a glowing ember effect. See Figure 7.7.

Note: For best results, do not pack down the rock wool. The placement of rock wool can have an effect on flame pattern and may need to be adjusted to achieve a desired appearance.

4. Inspect the Pilot Assembly to ensure it is clear of any vermiculite or rock wool.

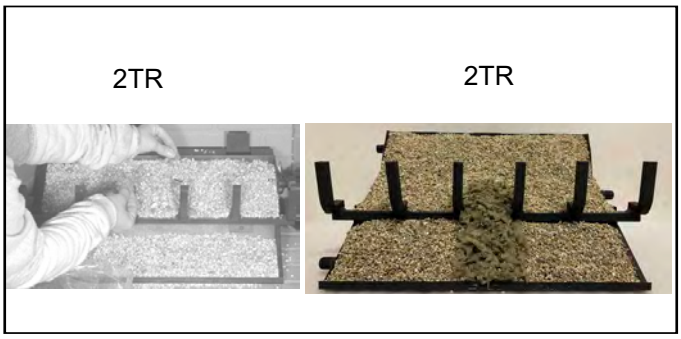

Figure 7.7 Rock Wool Placement

5. Remove the Platinum Bright Embers™ from the package. For optimum performance peel each piece apart in layers and lightly place on top of the rock wool where the flame is blue. This will achieve the desired realism.

Note: Gas burns at the point of the least resistance. In the case of an uneven flame pattern it may be necessary to adjust the media material in the pans, using an object such as a screwdriver, to achieve the desired effect.

DO NOT:

- Pile the glowing embers too heavily on the pan.
- Cover the pilot with glowing embers

Decorative Lava Rock Placement:

1. Place desired amount of decorative lava rock on the floor of the fireplace.
2. Ensure all controls and switches are unobstructed after decorative lava rock has been placed.

DO NOT:

- Place decorative lava rock on the burner, pilot or logs.
- Allow decorative lava rock to come in contact with the flames. Lava rocks may contain moisture which, when heated, may cause it to popout during operation.
- Cover the air mixer located on the lower left side of the burner.

E. Log Placement

The Stadium series vented log set has multiple log options to choose from. These logs are sold seperately.

For log placement instructions refer to the installation instructions supplied with the log set.

NOTE: The appliance is designed to be operated with one of the optional log sets installed. Do NOT operate this appliance without a log set installed.

F. Before Lighting Appliance

Before operating this appliance for the first time, **have a qualified service technician:**

- Verify all shipping material have been removed from inside and/or underneath the gas log set.
- Review proper placement of logs.
- Ensure there are no gas leaks.

Caution: This appliance must NOT be operated with glass doors in the closed position.

G. Flame Appearance

Flames from the pilot and burner should be visually checked as soon as the appliance is installed. In addition, periodically check the flames visually during operation.

Pilot Flame:

The IPI pilot flame must always be present when the appliance is in operation. Pilot flame should engulf the flame sensor rod. See Figure 7.8.

If the pilot flame does not touch the flame sensor, then the main burner cannot function reliably.

Figure 7.8 IPI Pilot Flame

Main Burner Flame:

Operate the appliance at full rate for 45 minutes, the following flame appearances should be observed.

Burner will have a random pattern of yellow flames, with glowing embers covering the main burner.

Note: This appliance is a vented gas log set, therefore some flame impingement and soot is normal.

Avoid any drafts that alter burner flame patterns. Do not allow fans to blow directly on the appliance. Do not place a blower inside the burn area of the fireplace. Ceiling fans may create drafts that alter flame patterns. Sooting and improper burning will result.

H. Initial Use

Initial Break-in Procedure:

- The burner should run three to four hours continuously on high.
- Turn the burner off and allow it to completely cool.

This cures the materials used to manufacture the burner. *NOTICE! Open windows for air circulation during appliance break-in.*

- Some people may be sensitive to smoke and odors.
- Smoke detectors may activate.

8 Lighting Instructions

A. Intermittent Pilot (IPI)

LIGHTING INSTRUCTIONS

1. STOP! Read the safety instruction label.
2. Turn wall switch to the “OFF” position.

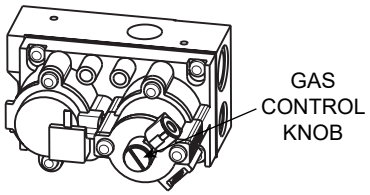

3. Wait five minutes to clear out any gas. If you smell gas, STOP! Follow “B” on the safety information label. If you don’t smell gas, go to next step.
4. Locate pilot assembly inside unit.

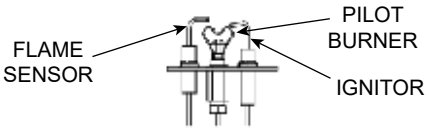

5. To light pilot and main burner, turn wall switch to “ON”. Don not light by hand.
6. If appliance will not operate, follow the instructions “TO TURN OFF GAS TO APPLIANCE” and call your service technician or gas supplier.

WARNING: This product and the fuels used to operate this product (liquid propane or natural gas), and the products of combustion of such fuels, can expose you to chemicals including benzene, which is known to the State of California to cause cancer and reproductive harm. For more information go to: www.P65Warnings.ca.gov.

TO TURN OFF GAS TO APPLIANCE

1. Turn on/off switch to “OFF”

FOR YOUR SAFETY READ BEFORE LIGHTING

WARNING: If you do not follow these instructions exactly, a fire or explosion may result causing property damage, personal injury or loss of life.

A. This appliance has an intermittent pilot. When lighting the pilot, follow these instructions exactly.

B. BEFORE LIGHTING smell all around the appliance area for gas. Be sure to smell next to the floor bacause some gas is heavier than air and will settle to the floor.

WHAT TO DO IF YOU SMELL GAS
- Do not try to light any appliance.
- Do not touch any electric switch; do not use any phone in your building.
- Immediately call your gas supplier from a neighbor’s phone. Follow the gas supplier’s instructions.
- If you cannot reach your gas supplier, call the fire department.

C. Do not use this appliance if any part has been under water. Immediately call a qualified service technician to inspect the appliance and to replace any part of the control system and any gas control whcih has been under water.

Due to high surface temperatures, keep children, clothing and furniture away.
Keep burner and control compartment clean. See installation instructions accompanying the appliance.

FOR YOUR SAFETY: Do not store or use gasoline or other flammable vapors and liquids in the vicinity of this or any other appliance.

9 Maintenance and Service

Any safety screen removed for servicing must be replaced prior to operating the appliance.

When properly maintained, your appliance will give you many years of trouble-free service. **Contact your dealer** to answer questions regarding proper operation, trouble-shooting and service for your appliance.

Visit www.hearthnhome.com to locate a dealer. We recommend annual service by a qualified service technician.

A. Maintenance: Frequency and Tasks

The matrix below is an overview of maintenance tasks to be performed on the appliance. Section B gives details and instructions needed to assist the appropriate person in performing the tasks.

Task	Frequency	To be completed by
Pilot Inspection & Cleaning	Annually	Qualified Service Technician
Log Inspection	Annually	
Firebox Inspection	Annually	
Burner Ignition & Operation	Annually	
Remote and Battery Pack inspection	Annually	

B. Maintenance Tasks: Qualified Service Technician

The following tasks must be performed by a qualified service technician.

Pilot Inspection & Cleaning

Frequency: Annually

By: Qualified Service Technician

Tools needed: Small soft brush, pipe cleaner

- Inspect and remove dust, spider webs and lint
- Gently run pipe cleaner through air intake port
- Inspect IPI flame sensing rod for soot, corrosion an deterioration. Polish with 320 grit Emery cloth and/or 3M™ Scotch-Brite Abrasive Hand Pad.

Log Inspection

Frequency: Annually

By: Qualified Service Technician

Tools needed: Small soft brush

- Inspect for broken, cracked or misplaced logs
- Gently remove any dust and/or soot buildup

Firebox Inspection

Frequency: Annually

By: Qualified Service Technician

Tools needed: Protective gloves, sandpaper, steel wool, cloths, mineral spirits, primer and touch-up paint.

- Inspect for paint condition, warped surfaces, corrosion or perforation. Sand and repaint as necessary.
- Replace fireplace if firebox has been perforated.

Burner Ignition and Operation

Frequency: Annually

By: Qualified Service Technician

Tools needed: Protective gloves, vacuum cleaner, whisk broom, flashlight, voltmeter, indexed drill bit set, and a manometer.

- Verify burner is properly secured and aligned with pilot or igniter.
- Clean off burner top, inspect for plugged ports, corrosion or deterioration. Replace burner if necessary
- Inspect for lifting or other flame problems.
- Inspect orifice for soot, dirt and corrosion. Verify orifice size is correct. See Service Parts List for proper orifice sizing.
- Verify manifold and inlet pressures. Adjust regulator as required.
- Inspect pilot flame pattern and strength. Clean or replace orifice spud as necessary.

C. Cleaning and Servicing

Annual inspection and cleaning by your dealer or qualified service technician is recommended to prevent malfunction and/or sooting.

Caution! Before cleaning make sure the appliance is cool and the power to the unit is turned off.

Note: During normal operation it is common that some sooting may occur on the logs as well as internal panels. This can be more prevalent with propane (LP). Clean soot from the appliance as frequently as necessary to eliminate a buildup of soot or permanent discoloration.

Periodic Cleaning:

- Remove logs carefully, by holding gently at each end. Gloves are recommended to prevent skin irritation. If skin irritation occurs, wash gently with soap and water. Refer to installation manual for correct log placement.
- Do NOT use cleaning fluid to clean logs or any part of the appliance.
- Brush logs with soft bristle brush or vacuum with brush attachment.
- Vacuum loose particles and dust from the burner, controls and grate weldment.
- Replace battery in remote control device.

Annual Cleaning/Inspection:

- Inspect and clean burner air intake shutter. Remove lint or particles with vacuum, brush, or pipe cleaners. **Failure to keep air intake shutter clean may result in sooting and/or poor combustion.**
- Inspect and clean all burner ports.
- Inspect pilot for proper operation.
- Verify flame pattern and log placement for proper operation.
- Verify smooth and responsive ignition of main burner

If not using the appliance for an extended period (e.g.: summer months, vacation/trips, etc.):

- Remove batteries from remote and battery pack to avoid corrosion.

10 Troubleshooting

A. Frequently Asked Questions

ISSUE	SOLUTION
Odor from appliance	When first operated, this appliance may release an odor for the first several hours. This is caused by the burning off of any oils remaining from manufacturing. Odor may also be released from finishing materials and adhesives used around the appliance.
Metallic noise	Noise is cause by metal expanding and contracting as it heats up and cools down, similar to the sound produced by a furnace or heating duct. This noise does not affect the operation or longevity of the appliance.
Wall above appliance feels hot to the touch	The area around, specifically above the firebox opening will become hot to the touch during operation. This is normal, no action is necessary.

B. Troubleshooting

With proper installation, operation and maintenance your gas appliance will provide years of trouble-free service. If you do experience a problem, this troubleshooting guide will assist a qualified service technician in the diagnosis of a problem and the corrective action to be taken. This troubleshooting guide should only be used by a qualified service technician. Contact a dealer to arrange a service call by a qualified service technician.

IntelliFire™ Ignition System

SYMPTOM	POSSIBLE CAUSE	CORRECTIVE ACTION
Pilot won't light. The ignition/module makes noise, but no spark.	Incorrect Wiring	Verify sensor wire (white) and igniter wire (orange) are connected to correct terminals on module and pilot assembly.
	Loose connections or electrical shorts in the wiring	Verify no loose connections or electrical shorts in wiring from module to pilot assembly. Verify connections underneath pilot assembly are tight; also verify igniter and flame sense wires are not grounding out to metal chassis, pilot burner, pilot enclosure, mesh screen if present, or any other metal object.
	Ignitor gap is too large	Verify gap of igniter to right side of pilot hood. The gap should be approximately .125 in. or 1/8 in. (3 mm).
Pilot won't light. There is no noise or spark.	Bad/Dead Batteries	Replace (2) D size batteries, located on the right side of appliance.
	A shorted or loose connection in wiring configuration or wire harness.	Remove and reinstall the wiring harness that plugs into module. Verify there is a tight fit. Verify pilot assembly wiring to module. Remove and verify continuity of each wire in wiring harness. Replace any damaged components.
	Module not grounded	Verify black ground wire from module wire harness is grounded to metal chassis of appliance.

IntelliFire™ Ignition System (Continued)

SYMPTOM	POSSIBLE CAUSE	CORRECTIVE ACTION
Pilot sparks, but will not light.	Pilot covered with media.	Verify that the pilot is clear of all media. If covered, remove media and restart.
	No gas supply.	Verify that incoming gas line ball valve is “open”. Verify that inlet pressure reading is within acceptable limits.
	Ignitor gap is too large.	Verify gap of igniter to right side of pilot hood. The gap should be approximately .125 in. or 1/8 in. (3 mm).
	Module is not grounded.	Verify module is securely grounded to metal chassis of appliance.
	Pilot valve solenoid	Verify that 1.5 to 1.8 VDC is supplied to pilot solenoid from module. If below 1.5 volts, replace module. If 1.5 volts or greater, replace valve.
Pilot lights but continues to spark, and burner will not ignite. (If the pilot continues to spark after the pilot flame has been lit, flame rectification has not occurred).	A short or loose connection in flame sensing rod.	Verify all connections to wiring diagram in manual. Verify connections underneath pilot assembly are tight. Verify connections are not grounding out to metal chassis, pilot burner, pilot enclosure or screen if present, or any other metal object.
	Poor flame rectification or contaminated flame sensing rod.	Verify correct pilot orifice is installed and gas inlet is set to pressure specifications. Check pilot for soot. Clean if necessary.
	Module is not grounded.	Verify module is securely grounded to metal chassis of appliance. Verify that wire harness is firmly connected to the module.
	Damaged pilot assembly or contaminated flame sensing rod.	Verify that ceramic insulator around the flame sensing rod is not cracked, damaged, or loose. Verify connection from flame sensing rod to white sensor wire. Polish flame sensing rod with fine steel wool to remove any contaminants that may have accumulated on flame sensing rod. Verify continuity with a multimeter with ohms set at lowest range. Replace pilot if any damage is detected.
	Module	Turn wall control to OFF position. Remove ignitor wire “I” from module. Turn wall control to "ON" position. If there is no spark at “I” terminal module must be replaced. If there is a spark at “I” terminal, module is fine.

Contact your dealer for additional information regarding operating and troubleshooting.
Visit www.hearthnhome.com to locate a dealer

2-Tier Stadium 18” Hearth Kit

Beginning Manufacturing Date:
Ending Manufacturing Date: Active

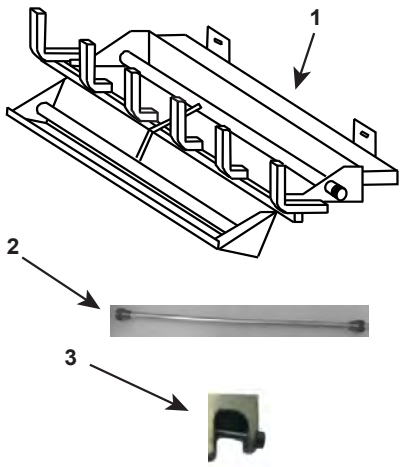

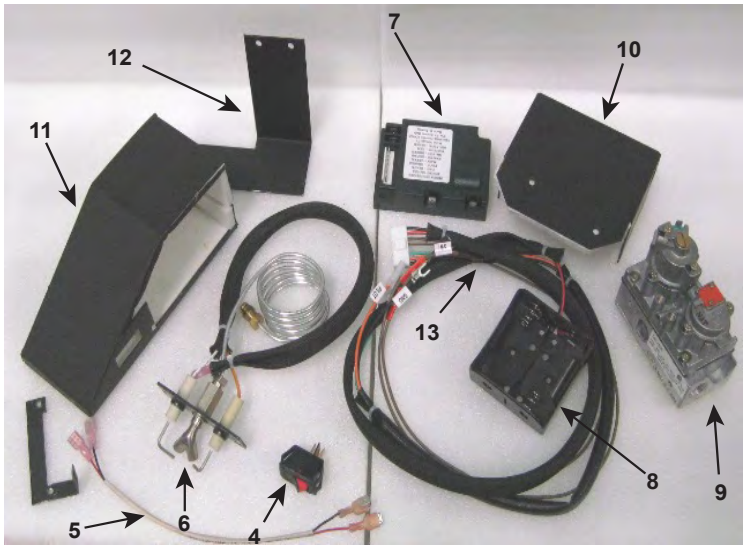

IMPORTANT: THIS IS DATED INFORMATION. Parts must be ordered from a dealer or distributor. **Hearth and Home Technologies does not sell directly to consumers**. Provide model number and serial number when requesting service parts from your dealer or distributor.

ITEM	DESCRIPTION	COMMENTS	PART NUMBER	Stocked at Depot
1	Burner Pan & Grate Assembly		BPA-300-18	
2	Flexible Connector		FT-1-18	
3	Damper Clamp		SRV500-SC	
4	On/Off Switch		01-1070	
5	On/Off Switch Wiring Harness		16-1615	
6	NG Pilot Assembly		07-1024	
6	LP Pilot Assembly		07-1023	**Y**
7	Control Module		SRV593-592	**Y**
8	Battery Pack		SRV593-594	**Y**
9	NG Valve		SRV593-500	**Y**
9	LP Valve		SRV593-501	
10	Valve Bracket		MT-350-VC	
11	Control Box		MT-350-BBA18	
12	Control Box Mount		MT-350-CBMS18	
13	Wire Harness		SRV593-590	**Y**
	Battery Cover Log		H-0586A	
	Remote Control		RCB	
	Lava Rock	Qty 2	SRVACC10	
	Vermiculite (Large)		SRVACC11	
	Embers		SRVACC12	
	Platinum Embers		PBE-5	
	Sand (Natural Gas Only)		SRVACC15	
	Installation Manual		4004-900	

2-Tier Stadium 24" Hearth Kit

Beginning Manufacturing Date:
Ending Manufacturing Date: Active

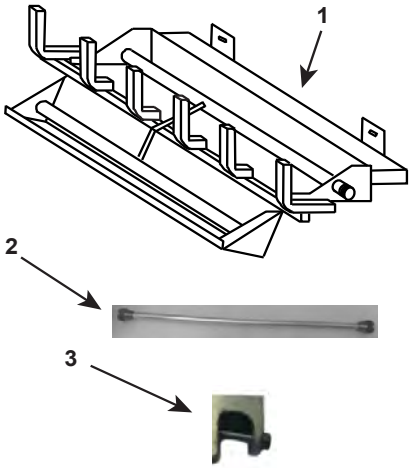

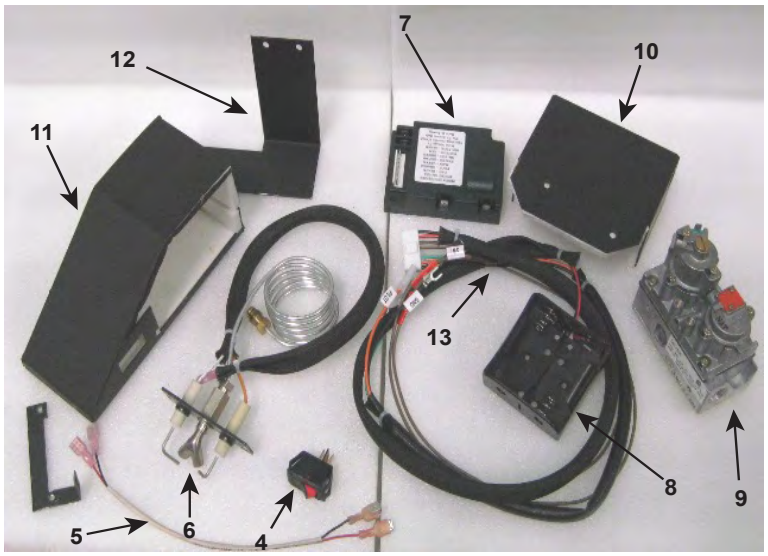

IMPORTANT: THIS IS DATED INFORMATION. Parts must be ordered from a dealer or distributor. **Hearth and Home Technologies does not sell directly to consumers**. Provide model number and serial number when requesting service parts from your dealer or distributor.

ITEM	DESCRIPTION	COMMENTS	PART NUMBER	Stocked at Depot
1	Burner Pan & Grate Assembly		BPA-300-24	
2	Flexible Connector		FT-1-24	
3	Damper Clamp		SRV500-SC	
4	On/Off Switch		01-1070	
5	On/Off Switch Wiring Harness		16-1615	
6	NG Pilot Assembly		07-1024	
6	LP Pilot Assembly		07-1023	**Y**
7	Control Module		SRV593-592	**Y**
8	Battery Pack		SRV593-594	**Y**
9	NG Valve		SRV593-500	**Y**
9	LP Valve		SRV593-501	
10	Valve Bracket		MT-350-VC	
11	Control Box		MT-350-BBA18	
12	Control Box Mount		MT-350-CBMS18	
13	Wire Harness		SRV593-590	**Y**
	Battery Cover Log		H-0586A	
	Remote Control		RCB	
	Lava Rock	Qty 2	SRVACC10	
	Vermiculite (Large)		SRVACC11	
	Vermiculite (Small)		SRVACC11	
	Embers		SRVACC12	
	Platinum Embers		PBE-5	
	Sand (Natural Gas Only)		SRVACC15	
	Installation Manual		4004-900	

2-Tier Stadium 30” Hearth Kit

Beginning Manufacturing Date:
Ending Manufacturing Date: Active

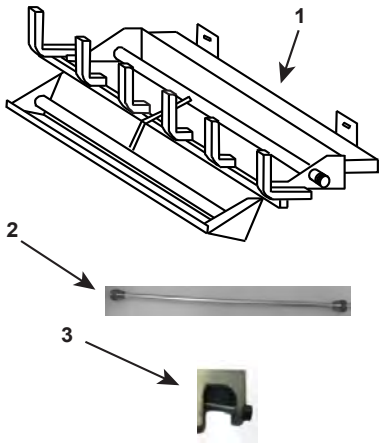

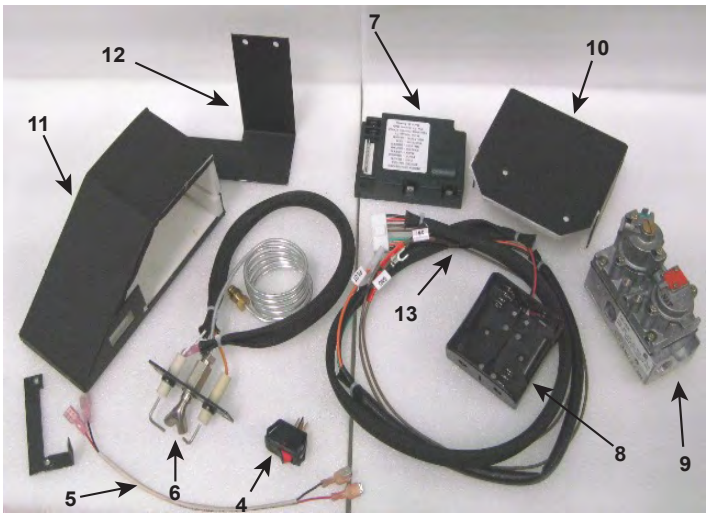

IMPORTANT: THIS IS DATED INFORMATION. Parts must be ordered from a dealer or distributor. **Hearth and Home Technologies does not sell directly to consumers**. Provide model number and serial number when requesting service parts from your dealer or distributor.

ITEM	DESCRIPTION	COMMENTS	PART NUMBER	Stocked at Depot
1	Burner Pan & Grate Assembly		BPA-300-30	
2	Flexible Connector		FT-1-30	
3	Damper Clamp		SRV500-SC	
4	On/Off Switch		01-1070	
5	On/Off Switch Wiring Harness		16-1615	
6	NG Pilot Assembly		07-1024	
6	LP Pilot Assembly		07-1023	**Y**
7	Control Module		SRV593-592	**Y**
8	Battery Pack		SRV593-594	**Y**
9	NG Valve		SRV593-500	**Y**
9	LP Valve		SRV593-501	
10	Valve Bracket		MT-350-VC	
11	Control Box		MT-350-BBA18	
12	Control Box Mount		MT-350-CBMS18	
13	Wire Harness		SRV593-590	**Y**
	Battery Cover Log		H-0586A	
	Remote Control		RCB	
	Lava Rock	Qty 2	SRVACC10	
	Vermiculite (Large)		SRVACC11	
	Vermiculite (Small)		SRVACC11	
	Embers		SRVACC12	
	Platinum Embers		PBE-5	
	Sand (Natural Gas Only)	Qty 2	SRVACC15	
	Installation Manual		4004-900	

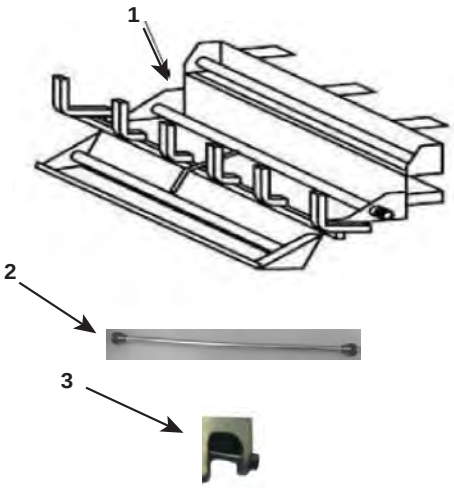

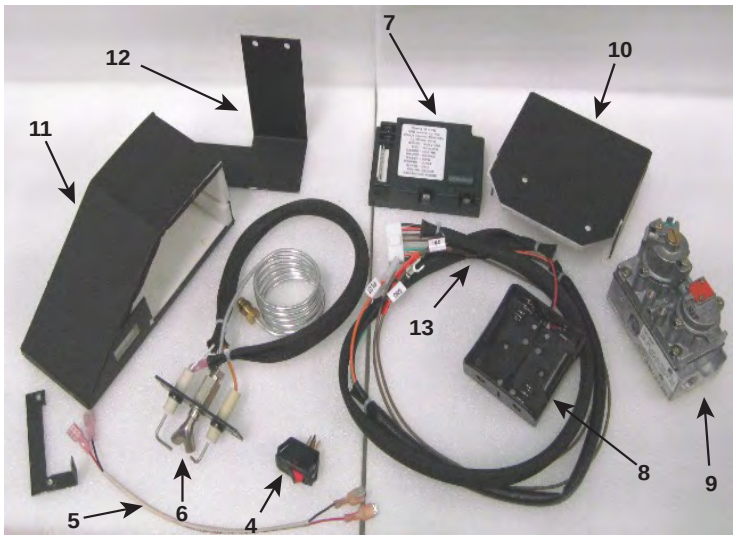

IMPORTANT: THIS IS DATED INFORMATION. Parts must be ordered from a dealer or distributor. **Hearth and Home Technologies does not sell directly to consumers**. Provide model number and serial number when requesting service parts from your dealer or distributor.

ITEM	DESCRIPTION	COMMENTS	PART NUMBER	Stocked at Depot
1	Burner Pan & Grate Assembly		BPA-300-33	
2	Flexible Connector		FT-1-18	
3	Damper Clamp		SRV500-SC	
4	On/Off Switch		01-1070	
5	On/Off Switch Wiring Harness		16-1615	
6	NG Pilot Assembly		07-1024	
6	LP Pilot Assembly		07-1023	Y
7	Control Module		SRV593-592	Y
8	Battery Pack		SRV593-594	Y
9	NG Valve		SRV593-500	Y
9	LP Valve		SRV593-501	
10	Valve Bracket		MT-350-VC	
11	Control Box		MT-350-BBA18	
12	Control Box Mount		MT-350-CBMS18	
13	Wire Harness		SRV593-590	Y
	Battery Cover Log		H-0586A	
	Remote Control		RCB	
	Lava Rock	Qty 2	SRVACC10	
	Vermiculite (Small)	Qty 2	SRVACC11	
	Embers		SRVACC12	
	Platinum Embers		PBE-5	
	Sand (Natural Gas Only)	Qty 2	SRVACC15	
	Installation Manual		4004-900	

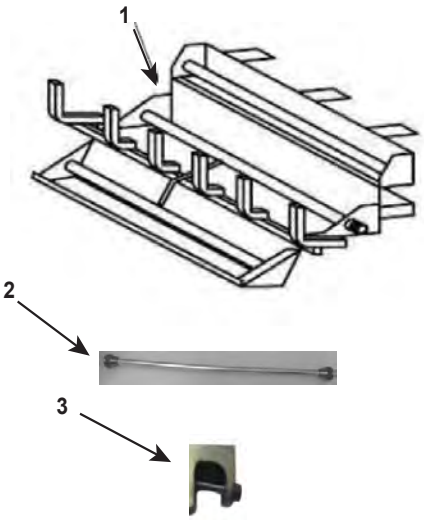

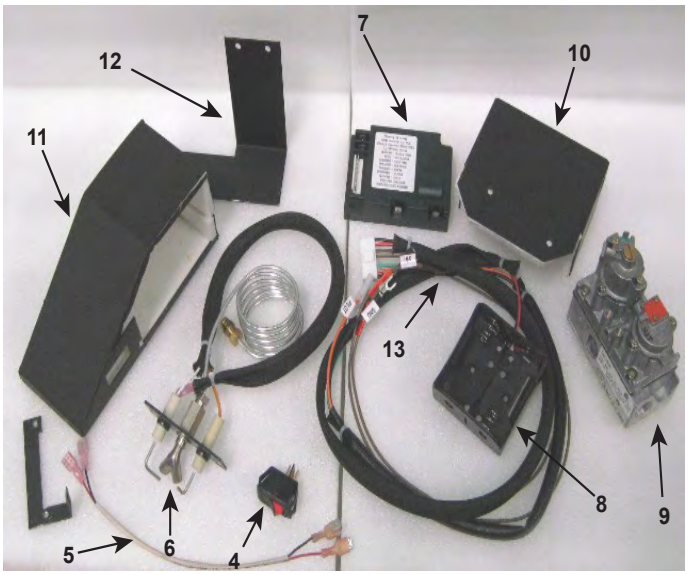

IMPORTANT: THIS IS DATED INFORMATION. Parts must be ordered from a dealer or distributor. **Hearth and Home Technologies does not sell directly to consumers**. Provide model number and serial number when requesting service parts from your dealer or distributor.

ITEM	DESCRIPTION	COMMENTS	PART NUMBER	Stocked at Depot
1	Burner Pan & Grate Assembly		BPA-300-35	
2	Flexible Connector		FT-1-24	
3	Damper Clamp		SRV500-SC	
4	On/Off Switch		01-1070	
5	On/Off Switch Wiring Harness		16-1615	
6	NG Pilot Assembly		07-1024	
6	LP Pilot Assembly		07-1023	**Y**
7	Control Module		SRV593-592	**Y**
8	Battery Pack		SRV593-594	**Y**
9	NG Valve		SRV593-500	**Y**
9	LP Valve		SRV593-501	
10	Valve Bracket		MT-350-VC	
11	Control Box		MT-350-BBA18	
12	Control Box Mount		MT-350-CBMS18	
13	Wire Harness		SRV593-590	**Y**
	Battery Cover Log		H-0586A	
	Remote Control		RCB	
	Lava Rock	Qty 2	SRVACC10	
	Vermiculite (Large)		SRVACC11	
	Embers	Qty 2	SRVACC12	
	Platinum Embers	qty 2	PBE-5	
	Sand (Natural Gas Only)		SRVACC15	
	Installation Manual		4004-900	

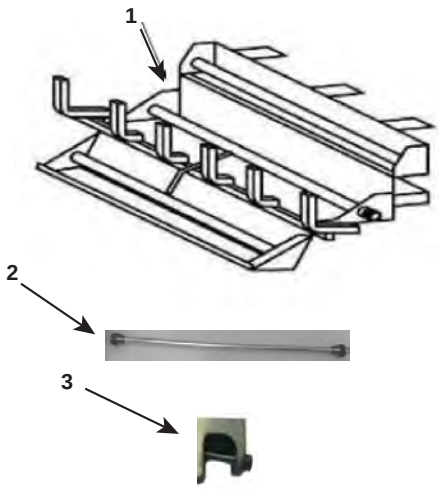

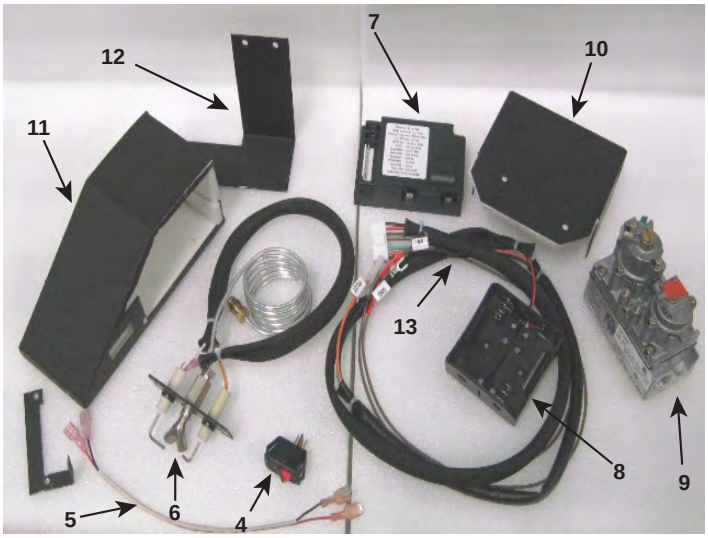

IMPORTANT: THIS IS DATED INFORMATION. Parts must be ordered from a dealer or distributor. **Hearth and Home Technologies does not sell directly to consumers**. Provide model number and serial number when requesting service parts from your dealer or distributor.

ITEM	DESCRIPTION	COMMENTS	PART NUMBER	Stocked at Depot
1	Burner Pan & Grate Assembly		BPA-300-40	
2	Flexible Connector		FT-1-30	
3	Damper Clamp		SRV500-SC	
4	On/Off Switch		01-1070	
5	On/Off Switch Wiring Harness		16-1615	
6	NG Pilot Assembly		07-1024	
6	LP Pilot Assembly		07-1023	**Y**
7	Control Module		SRV593-592	**Y**
8	Battery Pack		SRV593-594	**Y**
9	NG Valve		SRV593-500	**Y**
9	LP Valve		SRV593-501	
10	Valve Bracket		MT-350-VC	
11	Control Box		MT-350-BBA18	
12	Control Box Mount		MT-350-CBMS18	
13	Wire Harness		SRV593-590	**Y**
	Battery Cover Log		H-0586A	
	Remote Control		RCB	
	Lava Rock	Qty 3	SRVACC10	
	Vermiculite (Large)		SRVACC11	
	Vermiculite (Small)		SRVACC11	
	Embers		SRVACC12	
	Platinum Embers	Qty 3	PBE-5	
	Sand (Natural Gas Only)	Qty 2	SRVACC15	
	Installation Manual		4004-900	

B. Contact Information

Hearth & Home Technologies
7571 215th Street West, Lakeville, MN 55044
www.hearthnhome.com

Please contact your dealer with any questions or concerns.
For the location of your nearest dealer,
please visit www.hearthnhome.com

- NOTES -

NOTICE

DO NOT DISCARD THIS MANUAL

- Important operating and maintenance instructions included.
- Read, understand and follow these instructions for safe installation and operation.
- Leave this manual with party responsible for use and operation.