READ THIS PAGE FIRST

1. **Howard-McCray would like to thank you for purchasing one of our units.**
   PLEASE READ THIS MANUAL CAREFULLY BEFORE PROCEEDING WITH THE INSTALLATION OR OPERATING OF THIS UNIT.

2. **Environment -** These display cabinets are made to operate at 75°F and 55% relative humidity. Temperature and/or humidity greater than the factory recommendations will hinder the performance of this cabinet.

3. **Cabinet Set-Up** – A qualified refrigeration mechanic should set-up this cabinet. Control settings are extremely critical to the proper operation of this unit. These settings are the responsibility of the customer and are not covered by factory warranties. Failure to have this unit installed by a qualified refrigeration mechanic may VOID all the warranties on this unit.

4. **Location** – This cabinet must not be located in the direct rays of the sun or near radiant heat sources. A minimum of 3" of free air space is required at the rear of the cabinet.

5. **Never spray water into the cabinet.** This will cause damage to the seals.

6. **If additional assistance is required, please call us at 1-800-344-8222.**

READ THIS PAGE FIRST

Howard-McCray

Installation and Operating Instructions For

SR Series
SOLID DOOR REACH-IN REFRIGERATOR

Important Instructions

Please Read carefully
Before attempting to
install or operate the cabinet

Keep this Book for Future Reference

Table of Contents

Engineering Specifications ---------- 2
Receiving and Inspection ---------- 3
Installation ---------- 3
Electrical Service Connection ---------- 3
Caster or Leg Installation ---------- 3
Control Settings ---------- 4
Stocking the Cabinet ---------- 4
Defrost Period ---------- 4
Condensate Evaporator Pan ---------- 4
Drain Trap Installation ---------- 4
Start-Up Check-List ---------- 4
Controller Start-Up ---------- 5
Alarm Program ---------- 5
Maintenance Suggestions ---------- 6
The Cleaning Process ---------- 6
Condenser Cleaning ---------- 6
Machine Compartment Cleaning ---------- 6
Trouble Chart ---------- 7
Parts List ---------- 8
Customer Installation Record ---------- 9
Notes ---------- 10
Warranty ---------- Warranty
Dixell Manual (XR40CX) ---------- 1/4 – 4/4
Controller Set Point Chart (35F / 2C) ---------- 1 of 1
Leg Installation Drawing ---------- 1SH7789
Caster Installation Drawing ---------- 1SH7790
Condensate Evaporator Pan Installation Drawing ---------- 1SH7788
Cabinet Wiring Diagram ---------- 1SH, 2SH, 3SH6514

The following instructions are for the benefit of the new owner and the installing contractor. They should be studied carefully before attempting to install or operate the cabinet. This manual is the property of the owner and should remain in the owner's possession.

Engineering Specifications – SR Models

Model No.	Cabinet Dimensions D x H* x L	Compressor HP	Electrical Voltage	Max. Amps	Power Cord Plug (NEMA)
SR22	35 x 83 x 26 1/2	1/4	115/60Hz/1PH	6.8	5-15P
SR48	35 x 83 x 52 1/4	1/3	115/60Hz/1PH	9.6	5-15P
SR75	35 x 83 x 78	1/2	115/60Hz/1PH	12.1	5-20P

* - Includes 5" Casters
or
** = Top mounts does not includes 6" Legs

These cabinets are designed to operate in an air conditioned location ONLY.
Temperature not to exceed 75ºF and a relative humidity not to exceed 55%.

Receiving and Inspection Procedure

1) The cabinet has been carefully operation tested and inspected before crating and has been determined to be in good operating condition before leaving the factory.

2) Upon arrival of the cabinet, the crate should be inspected thoroughly for any damage that may have occurred in transit. In the event that any damage is discovered, it should be noted on the delivery ticket or Bill of Lading and signed to that effect. An immediate claim should then be filed against the carrier giving them the description and amount of damage.

3) After the crate has been removed, the cabinet should be examined carefully for any damage. If there is any concealed damage, the carrier should be notified immediately. Make a request in writing with the carrier for an inspection within 15 days, and retain all packaging. The carrier will supply the inspection report and the required claim forms.

4) Our Company can assume no responsibility for filing freight claims as the cabinet was in good condition on a clear Bill of Lading, F.O.B. Philadelphia. However, the factory will assist, if required.

5) Shortages - Check your shipment for any possible shortages of material. If one exists and is found to be responsibility of Howard-McCray, notify the factory. Howard-McCray will acknowledge shortages within ten days from receipt of acknowledgement. If a shortage exists and it involves the carrier, notify the carrier immediately and request an inspection.

Installation

As with any refrigerated cabinet, there are several very important requirements that must be complied with for proper operation. They are as follows:

1. This line of cabinets are designed to operate in a location with an ambient temperatures of 75°F and a relative humidity of 55%. This cabinet should not be located in an area the cabinet may be subjected to radiant heat from spot or flood lamps, sun rays or heat from suspended gas heating fixtures.

2. After locating the cabinet, it must be leveled from front to back as well as end-to-end. This will facilitate proper refrigeration at the evaporator and proper dissipation of the defrost water.

3. The minimum clearance allowed for the rear of the cabinet is 3 inches and the sides can have no clearance if need be.

4. All wiring must be installed by a competent electrician and conform to local codes. The incoming voltage must be maintained to within 5% of the voltage shown on the cabinet nameplate.

Electrical Service Connection

Some of the models are provided with a Service Power Cord, see the ***Engineering Specifications*** for the plug type of your cabinet. Locate the electrical outlet in such a manner that you may plug in the service cord directly, without the use of an extension cord. The electrical outlet used to supply the cabinet must have proper ground facilities to match the service plug on the cabinet service cord. Make sure that no other electrically operated devices are connected to the circuit operating this cabinet, which will cause an overload. Overloaded circuits are extremely hazardous.
The electrical connection for models that are not supplied with a Service Power Cord is to be made in junction box located at the rear of the cabinet (see applicable Plan View drawing for exact location).
The incoming voltage must be maintained to within 5% of the voltage shown on the nameplate. Howard-McCray will not accept responsibility for the performance of the cabinet or malfunction of any component due to a incorrect voltage supply than that indicated on the serial rating plate. Use separate electrical supply lines connected to a fuse block or circuit breaker of proper capacity.

Caster or Leg Installation

Most cabinets are supplied with a set of casters. These casters are shipped as separate items and will need to be installed before the cabinet is located in position. See the ***Caster Installation*** drawing for exact instructions.

Some cabinets are ordered and supplied with adjustable legs. These legs and mounting plates are shipped as separate items and will need to be installed before the cabinet is located in position. See the ***Leg Installation*** drawing for exact instructions.

NOTE When installing either Casters or Legs, take all necessary safety precautions when elevating the cabinet.

Control Settings

Temperature Control-Electronic

The standard temperature control, when it leaves is set to Cut-Out at 35ºF and Cut-In 39ºF, and can be located in the machine compartment right front behind the grille. This control may have to be reset to satisfy the owner's requirements or local conditions. See attached controller manual. The controller is located in the machine compartment behind the front grille.

Stocking the Cabinet

After the equipment is running, it should be operated for a sufficient length of time to bring the storage temperature down to cycling of the condensing unit. Three to four hours usually will be enough to allow temperatures to drop.
The evaporator fans draw air up from the storage area, circulate it through the evaporator and discharge it down the rear wall of the cabinet. Be certain that their good air circulation.

Defrost Period

One defrost periods per day. The defrost period occurs 24 hours after start-up or can be reset by forcing a manual defrost on the controller. Pressing the defrost button on the controller for 2 seconds will manually start a defrost. Defrost is set to terminate at 40ºF Evaporator Coil Temperature.

Condensate Evaporator Pan

An electric condensate evaporator pan is furnished with the cabinet, to dissipate the water collected from the coil during defrost or off cycle. The evaporator pan and it's mounting bracket are shipped as a separate items. The evaporator pan is equipped with a power cord for plugging into a 115VAC NEMA 5-15R outlet. To install the evaporator see the ***Condensate Pan Instruction*** drawing for exact instructions.

Drain Trap Installation

A properly installed drain trap is extremely important in ensuring satisfactory cabinet operation, and protection from product loss. The drain hose on this model is factory attached to the rear of the cabinet. The drain hose is supplied at a length sufficient to reach the floor, when the cabinet is equipped with either casters or legs. After installing the factory supplied Electric Condensate Pan loosen the drain hose attachment clamps that hold the drain hose in a loop. Configure the drain hose on the rear of the cabinet so that it is oriented vertically to the condensate pan. Locate the factory supplied drain trap so that it exits (in a vertical orientation) into the Electric Condensate Pan. Determine where the drain hose will overlap the drain trap by a minimum of 2" and cut the hose to this length. Insert the drain trap into the drain hose and secure them to the rear of the cabinet.

NOTE Never route the drain hose directly into the Electric Condensate Pan, the heat of the pan will damage the drain hose.

CHECK-LIST FOR USE BEFORE START-UP

The following items should be checked, when applicable to the cabinet:

Make sure that the door gaskets make a proper seal to the cabinet.

Make sure that all fan motors are properly plugged in.

Make sure that all fan blades are tight on all fan motor shafts.

Make sure that the expansion valve sensing bulb is properly positioned and is tightly secured.

Make sure that all flare nuts are tight.

Make sure that tubing entrance holes both inside and outside the cabinet are properly sealed.

Make sure that all SEALANT MATERIAL that was removed from position in the cabinet during installation and piping is correctly replaced and seals in a satisfactory manner.

Make sure that all the loose debris in the cabinet is removed.

Start-Up

1. Electrically energize the cabinet. Check the supply voltage, must be within +/- 5%. Check the evaporator fan motors to ensure all are operating and rotating in the correct direction.

2. Electrically energize the refrigeration system. Check the supply voltage, must be within +/- 5%.

3. Set and check the Temperature Control settings (as outlined in the Temperature Control section below).

4. Verify refrigeration system is operating properly.

5. Verify proper Defrost operation (as outlined in the Defrost section).

6. Set the Defrost Time clock to the correct time-of-day (as outlined in the Defrost Time Clock section).

7. Verify the proper setting of the Crankcase Pressure Valve (as outlined in the Crankcase Pressure Valve section).

Controller Start-Up

SET: To display target set point; in programming mode it selects a parameter or confirm an operation.

(DEF) To start a manual defrost

(UP): To see the max. Stored temperature; in programming mode it browses the parameter codes or increases the displayed value.

(DOWN) To see the min stored temperature; in programming mode it browses the parameter codes or decreases the displayed value.

To switch the instrument off, if onF = oFF.

Not enabled.

KEY COMBINATIONS:

+ To lock & unlock the keyboard.

SET + To enter in programming mode.

SET + To return to the room temperature display.

The controller has been programmed to delay the compressor and fan motors for one minute. It will take approximately 30 minutes for the compressor to cycle, in a 75°F room. The cabinet will cycle between 35°F to 39°F.

If the alarm should go off during the pull-down period just press the SET button on the controller.

Alarm Program

The alarm is programmed to sound if the temperature should reach a high of 45°F or a low of 32°F by pressing the SET button on the controller this will restart the unit until it reaches the programmed temperature.

Individual Controller Parameters:

- **Cabinet Internal Temperature = Cut-In 39°F,Cut-Out 35°F**
- **Anti-Short cycle Delay [AC] = 1 Minute Delay**
- **Defrost Termination Temp[dtE] = 40°F Evaporator Coil Temperature**
- **Between Defrost Periods [idF] = 24 Hours**
- **Maximum Time in Defrost [MdF] = 60 Minutes**
- **Alarm High Limit [ALU] = 45°F**
- **Alarm Low Limit [ALL] = 32°F**
- **Alarm Delay**
- **+10 Minutes after Limit been reached**

See chart in this manual for additional parameter settings.

Maintenance Suggestions

An attractive operation can be a very profitable. Dirty and poorly merchandised cabinets are offensive to most discriminating customers, so a clean attractive cabinet will pay dividends. Weekly or more often, if necessary, the display area should be cleaned and attractively stocked.

Important Notice

1. ALWAYS disconnect the power to the cabinet before attempting to clean it with any liquid.

2. NEVER under any circumstances should a water hose be sprayed into this cabinet.

3. NEVER use ammonia or solutions with ammonia on this cabinet.

4. The use of abrasive cleaning materials on this cabinet will VOID all cabinet warranties.

The Cleaning Process

1. Turn the power off from the source.
2. Remove all merchandise from the cabinet and store in a refrigerated area. Then remove all shelves and floor pans.
3. This cabinet can be hand cleaned internally with a mild soap detergent and hot water. Diluted non-chlorine bleach and hot water is a good sanitizer. The cleaning cloth should be just wet enough to get a reasonable cleaning action but should not be wet to a point where it will emit a large amount of water which will flow through the drain system causing it to overflow.
4. After the cabinet is cleaned, any remaining water in the cabinet can be soaked up with the use of a sponge and dried out with a dry cloth completely before resuming operations.
5. Make sure that the internal drain is open and remove all scraps, paper, and lint.
6. All external panels may be cleaned with a damp cloth, and then they may be polished with a dry lint free cloth. This will preserve the luster of the cabinet.

Cleaning the Condenser

It is crucial that the condenser face be cleaned weekly. The condenser is prone to quickly accumulate any dust or dirt from the location. A dirty condenser will diminish the cooling ability of the system, thus resulting in longer operational times and warmer product temperatures.

The condenser face can be cleaned with the use of a hose/brush attachment on a vacuum cleaner. Take care to aviod bending the condenser fins, It is of vital importance that the condenser gets the proper amount of air through the fins and around the tubes, therefore all dirt, lint, and dust needs to be removed.

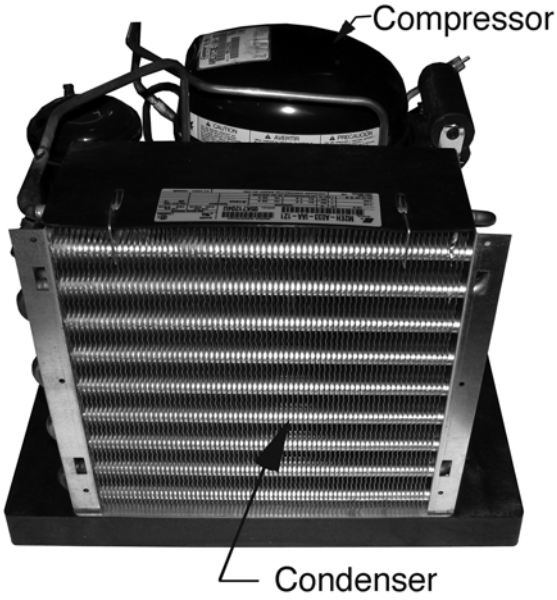

Cleaning the Machine Compartment

At intervals of four to six months, or before if necessary, it is recommended that the Machine Compartment be cleaned out. It should be accomplished in the following order:

1. Shut down the cabinet electrically.

2. Remove the front grille. Using a hose/brush attachment on a vacuum cleaner, all dirt, store lint and dust can be removed from the machine compartment.

3. If any traces of oil are found contact your Refrigeration Service person as soon as possible.

4. Before reloading the cabinet with merchandise, allow an hour for refrigeration pull-down. Make sure that all merchandise is in a good salable and refrigerated condition when re-loading the cabinet.

Trouble Chart

A. Compressor will not start - no hum

Possible Causes:
1. Disconnect switch open
2. Blown fuse
3. Defective wiring
4. Overload protector tripped
5. Open control contacts (control may be defective, or unit location may be too cold)
6. Defective overload protector

B. Compressor will not start - hums but cycles on overload

Possible Causes:
1. Low voltage
2. Unit wired incorrectly
3. Starting capacitor defective
4. Starting relay contact not closing
5. Compressor motor defective
6. High head pressure
7. Bearings on pistons tight - low oil charge

C. Compressor starts, but starting winding remains in circuit

Possible Causes:
1. Low voltage
2. Unit wired incorrectly
3. Starting capacitor weak
4. Running capacitor defective
5. Starting relay defective
6. Compressor motor defective
7. High head pressure

D. Compressor starts and runs but cycles on overload

Possible Causes:
1. Low voltage
2. Running capacitor defective
3. Overload protector defective
4. High head pressure
5. Fan motor, pump, etc., wired to wrong side of overload protector
6. Compressor motor partially grounded
7. Unbalanced line voltage (3 phase models)
8. Bearing or pistons tight - low oil charge

E. Compressor short cycles

Possible Causes:
1. Control differential set too close
2. Refrigerant undercharge
3. Refrigerant overcharge
4. Discharge valve leaking
5. Expansion valve leaking
6. Cutting out on high pressure control
7. Cutting out on overload protector because of tight bearings, stuck piston, high head pressure or restricted air cooled condenser

F. Compressor tries to start when thermostat closes but cuts out on overload, starts after several attempts

Possible Causes:
1. Low voltage
2. Thermostat differential too close (lower than 10°)
3. Thermostat bulb not in tight contact with evaporator

G. Running cycle too long, or unit operated continuously

Possible Causes:
1. Insufficient refrigerant charge
2. Dirty or restricted condenser
3. Unit: location too hot
4. Control contacts stuck
5. Air or other non-condensable gases in system
6. Expansion valve plugged or defective
7. Cabinet doors left open too long
8. Insufficient, defective or water - logged insulation
9. Evaporator coil plugged with ice or dirt

H. Evaporator temperature too high

Possible Causes:
1. Shortage of refrigerant, or leak on system
2. Restricted capillary tube, strainer or drier
3. Control setting too high
4. Expansion valve restricted
5. Expansion valve too small
6. Evaporator coil plugged with ice or dirt
7. Evaporator oil logged

I. Noisy Unit

Possible Causes:
1. Compressor oil charge low
2. Fan blade bent causing vibration
3. Fan motor bearings loose or worn
4. Tube rattle
5. Loose parts on condensing unit

J. Liquid line hot

Possible Causes:
1. Unit undercharged or leak in system
2. Expansion valve opened too far

K. Liquid line frosted

Possible Causes:
1. Restriction in drier
2. Shut off valve on receiver either partially closed or restricted

L. Suction line sweating or frosted

Possible Causes:
1. Expansion valve open too wide
2. Evaporator iced up
3. Evaporator fan motors not operating

Parts List

Part #	Description	Usage
1SH6521	Evaporator Fan Assembly - 115V	ALL Models
21-376	Digital Electric Controller – XR40CX	ALL Models
20-206	Electric Condensate Evaporator Pan	ALL Models
20-250	Anti-Sweat Heater	ALL Models
20-199	Lamp Bulb	ALL Models
30-489	Door Opening Breaker - 60-1/4"	ALL Models
30-490	Door Opening Breaker - 21-3/4"	ALL Models
30-493	Door Gasket	ALL Models
40-102-C	Wire Shelf	SR22
40-103-C	Wire Shelf - Ends	SR48 & 75
40-104-C	Wire Shelf - Centers	SR75
70-088	Condensing Unit 1/4 hp	SR22
70-089	Condensing Unit 1/3 hp	SR48
70-091	Condensing Unit 1/2 hp	SR75
80-148	Door Hinge	All Models

NOTE: Additional parts not included in this list are available from the factory. Contact the Parts & Service department at the phone numbers at the bottom of the page.

Keep this Page for Your Records:

Dear Customer:

We wish to congratulate you on your judgment. We are very proud to have been privileged to serve you with Howard-McCray equipment to fill your requirements.

Howard-McCray equipment is the product of a company dedicated in producing products of quality, incorporating progressive features on a timely basis and backed by a warranty which provides confidence.

Should you have any questions regarding features, operation, or service, call the Howard-McCray Assistance Center toll free. (800-344-8222)

Thank you,

Howard-McCray

Customer Installation Record:

Cabinet Model Number _____

Serial Number _____

Condensing Unit Model Number and Horsepower _____

Type of Control _____

Refrigerant _____

Thermostat _____

Other _____

_____

_____

Defrost Period _____

Date of Start-Up _____

Other Remarks _____

_____

_____

_____

Installing Contractor _____

_____

Address _____

_____

_____

_____

Phone Number _____

Howard-McCray **A Division of HMC Enterprises, LLC.**
831 East Cayuga Street • Philadelphia, PA 19124 USA • (215) 464-6800 • (800) 344-8222
Fax (215) 969-4890 • E-Mail: techservice@howardmccray.com

NOTES:

Warranty

ONE YEAR WARRANTY

Howard-McCray warrants the refrigerator of the serial number shown, and all parts thereof, to be free from defects in material and workmanship under normal use and service. Its obligation under the warranty shall be limited to repairing or replacing any part of said refrigerator (F.O.B Factory), which proves to be defective within one year from the date of original shipment, provided that the installation date is not thirty (30) days beyond the original shipping date of the refrigerator and examination discloses to its sole satisfaction that said refrigerator or any part thereof is defective. This warranty shall not apply to said refrigerator, or any part thereof, which has been subject to any accident, alteration, abuse, misuse, or damage by flood, fire or acts of God, or repaired other than as authorized herein. This warranty does not apply to glass or enameled finish. Labor costs are included in the warranty up to ninety (90) days from shipping date. More details are available in our price list.

All claims are to be handled through the selling dealer or distributor who originally bought the refrigerator from Howard-McCray. The selling dealer or distributor shall be solely responsible for transacting with Howard-McCray for the part(s) replacement of any in or out of warranty part.

FOUR YEAR COMPRESSOR REPLACEMENT WARRANTY

FOR SELF CONTAINED REFRIGERATOR CABINETS OR REMOTE CABINETS PURCHASED WITH COMPRESSORS

This Four Year Replacement Warranty is a right of the buyer upon payment. It is the sole right and remedy of buyer after the expiration of the One Year Warranty on the complete refrigerator. At any time during the four years following the expiration of the above One Year Warranty, if it is shown to the sole satisfaction of Howard-McCray that the compressor is inoperative due to defects in factory workmanship or material under normal use and service. Howard-McCray agrees to replace the compressor with a compressor or equipment of like or similar design and capacity.

All claims made pursuant to the Four Year Replacement Warranty are to be handled through the selling dealer or distributor who originally bought the refrigerator from Howard-McCray. The selling dealer or distributor shall be solely responsible for transacting with Howard-McCray the replacement of any compressor. To expedite the exchange of compressors under warranty, the dealer or distributor may make the exchange with a local compressor manufacturer's wholesaler. If the inoperative compressor is beyond the one (1) year warranty the selling dealer or distributor should send to Howard-McCray two (2) copies of the wholesaler's invoice with all warranty serial numbers, etc. and Howard-McCray will issue a credit to the dealer or distributor for the net exchange price, less the return allowance as listed by the compressor manufacturer. The original compressor should be returned to the wholesaler, if a return allowance is applicable. If not applicable, the original compressor serial plate should be returned to Howard-McCray, along with copies of the wholesaler's invoice.

The Four Year Warranty does not apply to any part of the cabinet or its finish, nor does it apply to the control valve, relay or any part of the refrigeration system. This Four Year Warranty shall not apply to said compressor if it has been subject to any accident, alteration, abuse, misuse, or damage by flood, fire or acts of God, or repaired other than as authorized herein. Labor costs are not included in the Four Year Replacement Warranty.

THIS "ONE YEAR WARRANTY" AND "FOUR YEAR REPLACEMENT WARRANTY" ARE EXPRESSLY IN LIEU OF ANY AND ALL REPRESENTATIONS AND WARRANTIES EXPRESSED OR IMPLIED. INCLUDING ANY IMPLIED WARRANTY OF MERCHANTABILITY OR FITNESS FOR A PARTICULAR PURPOSE WHETHER ARISING FROM STATUTE, COMMON LAW, CUSTOM, OR OTHERWISE. THE REMEDIES SET FORTH IN THE "ONE YEAR WARRANTY" AND "FOUR YEAR REPLACEMENT WARRANTY" SHALL BE THE EXCLUSIVE REMEDIES AVAILABLE TO ANY PERSON. NO PERSON HAS ANY AUTHORITY TO BIND HOWARD-McCRAY TO ANY REPRESENTATION, OBLIGATION OR WARRANTY OTHER THAN AS CONTAINED HEREIN.

Howard-McCray shall not be liable for any special, indirect or consequential loss or damage resulting from the use of this refrigerator or caused by any defect, failure or malfunction of any part thereof whether a claim for such damage is based upon warranty, contract, negligence, or otherwise. Neither the One Year Warranty nor the Four Year Replacement Warranty shall be construed in such a manner as to place any cost, liability, expense or obligation of any nature whatsoever (including but not limited to labor costs, freight or shipping expenses, lost profits damage to personal property and/or food or product spoilage costs) upon Howard-McCray other than the obligation (as specified herein) to either repair or replace any part of the refrigerator pursuant to the One Year Warranty or to furnish a replacement compressor pursuant to the Four Year Replacement Warranty.

The following, although not an exclusive list, are understood to be the responsibility of the owner and are not covered under either the One Year Warranty or Four Year Replacement Warranty, since they are not attributable to defects in material or workmanship.

1. Installation of or repair with parts in a manner other than as provided herein.
2. Damage as the result of moving the refrigerator
3. Damage due to improper electric voltage or improper electric service.

The One Year Warranty and Four Year Replacement Warranty are valid only in the continental United States of America.

Welded Compressors

The compressor having exceeded the allowed time for exchange with the refrigeration wholesaler, but within the remainder of the five year coverage period, as determined by the date of shipment of the cabinet from the factory; then the serial plate only would be removed and forwarded to our office with a copy of the wholesaler's invoice for the replacement compressor and the model and serial number of the cabinet upon which the replacement compressor was installed. The selling dealer's name, copy of the invoice if available, and the date of installation at the customer's location will also be required.

Semi-Hermetic Compressors:

Same as the welded compressor, except that the proved inoperative compressor would be returned to the authorized refrigeration wholesaler for salvage credit, which would be applied toward the purchase of the replacement compressor. The forwarding of the invoice along with the model and serial number of the cabinet with the selling dealer's name would allow processing of the claim.

IMPORTANT NOTICE: Replacement of parts covered by this warranty is subject to government restriction on materials and availability from the manufacturer of such parts. Bodily harm to any person while operating Howard-McCray equipment or harm to personal property is not the responsibility of Howard-McCray.

Howard-McCray

831 East Cayuga Street • Philadelphia, PA 19124 USA

(215) 464-6800 • 1-800-344-8222 • FAX (215) 969-4890

E-Mail: techservice@howardmccray.com • Web Site: www.howardmccray.com

Digital controller with defrost management

XR40CX

CONTENTS

1. GENERAL WARNING 1
2. GENERAL DESCRIPTION 1
3. CONTROLLING LOADS 1
4. FRONT PANEL COMMANDS 1
5. MAX & MIN TEMPERATURE MEMORIZATION 1
6. MAIN FUNCTIONS 1
7. PARAMETERS 2
8. DIGITAL INPUT (ENABLED WITH P3P = N) 3
9. TTL SERIAL LINE – FOR MONITORING SYSTEMS 3
10. X-REP OUTPUT – OPTIONAL 3
11. INSTALLATION AND MOUNTING 3
12. ELECTRICAL CONNECTIONS 3
13. HOW TO USE THE HOT KEY 3
14. ALARM SIGNALS 3
15. TECHNICAL DATA 3
16. CONNECTIONS 4
17. DEFAULT SETTING VALUES 4

1. GENERAL WARNING

1.1 PLEASE READ BEFORE USING THIS MANUAL

- This manual is part of the product and should be kept near the instrument for easy and quick reference.
- The instrument shall not be used for purposes different from those described hereunder. It cannot be used as a safety device.
- Check the application limits before proceeding.

1.2 ⚠ SAFETY PRECAUTIONS

- Check the supply voltage is correct before connecting the instrument.
- Do not expose to water or moisture: use the controller only within the operating limits avoiding sudden temperature changes with high atmospheric humidity to prevent formation of condensation
- Warning: disconnect all electrical connections before any kind of maintenance.
- Fit the probe where it is not accessible by the End User. The instrument must not be opened.
- In case of failure or faulty operation send the instrument back to the distributor or to "Dixell S.p.A." (see address) with a detailed description of the fault.
- Consider the maximum current which can be applied to each relay (see Technical Data).
- Ensure that the wires for probes, loads and the power supply are separated and far enough from each other, without crossing or intertwining.
- In case of applications in industrial environments, the use of mains filters (our mod. FT1) in parallel with inductive loads could be useful.

2. GENERAL DESCRIPTION

Model XR40CX, format 32 x 74 mm, is microprocessor based controller, suitable for applications on medium or low temperature refrigerating units. It has 2 relay outputs to control compressor and defrost, which can be either electrical or reverse cycle (hot gas). It is also provided with three NTC or PTC probe inputs, the first one for temperature control, the second one, to be located onto the evaporator, to control the defrost termination temperature, the third one, optional, to connect to the HOT KEY terminals to signal the condenser temperature alarm or to display a temperature. The digital input can operate as fourth temperature probe.
The HOT KEY output allows to connect the unit, by means of the external module XJ485-CX, to a network line ModBUS-RTU compatible such as the 21/03#monitoring units of X-WEB family. It allows to program the controller by means the HOT KEY programming keyboard.
The instrument is fully configurable through special parameters that can be easily programmed through the keyboard.

3. CONTROLLING LOADS

3.1 COMPRESSOR

The regulation is performed according to the temperature measured by the thermostat probe with a positive differential from the set point: if the temperature increases and reaches set point plus differential the compressor is started and then turned off when the temperature reaches the set point value again.

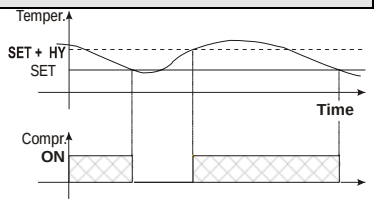

In case of fault in the thermostat probe the start and stop of the compressor are timed through parameters "COn" and "COF".

3.2 DEFROST

Two defrost modes are available through the "tdF" parameter: defrost through electrical heater (tdF = EL) and hot gas defrost (tdF = in). Other parameters are used to control the interval between defrost cycles (IdF), its maximum length (MdF) and two defrost modes: timed or controlled by the evaporator's probe (P2P).
At the end of defrost dripping time is started, its length is set in the FSt parameter. With FSt =0 the dripping time is disabled.

4. FRONT PANEL COMMANDS

SET: To display target set point; in programming mode it selects a parameter or confirm an operation.

❄ **(DEF)** To start a manual defrost

△ (UP): To see the max. stored temperature; in programming mode it browses the parameter codes or increases the displayed value.

▽ (DOWN) To see the min stored temperature; in programming mode it browses the parameter codes or decreases the displayed value.

To activate / deactivate the energy saving cycle.

Not enabled.

KEY COMBINATIONS:

△ + ▽ # To lock & unlock the keyboard.

SET + ▽ To enter in programming mode.

SET + △ # To return to the room temperature display.

4.1 USE OF LEDS

Each LED function is described in the following table.

LED	MODE	FUNCTION
❄	ON	Compressor enabled
❄	Flashing	Anti-short cycle delay enabled
❄	ON	Defrost enabled
❄	Flashing	Drip time in progress
	ON	An alarm is occurring
	ON	Continuous cycle is running
	ON	Energy saving enbled
°C/°F	ON	Measurement unit
°C/°F	Flashing	Programming phase

5. MAX & MIN TEMPERATURE MEMORIZATION

5.1 HOW TO SEE THE MIN TEMPERATURE

1. Press and release the ▼ key.
2. The "Lo" message will be displayed followed by the minimum temperature recorded.
3. By pressing the ▼ key again or by waiting 5s the normal display will be restored.

5.2 HOW TO SEE THE MAX TEMPERATURE

1. Press and release the ▲ key.
2. The "Hi" message will be displayed followed by the maximum temperature recorded.
3. By pressing the ▲ key again or by waiting 5s the normal display will be restored.

5.3 HOW TO RESET THE MAX AND MIN TEMPERATURE RECORDED

1. Hold press the SET key for more than 3s, while the max. or min temperature is displayed. (rSt message will be displayed)
2. To confirm the operation the "rSt" message starts blinking and the normal temperature will be displayed.

6. MAIN FUNCTIONS

6.1 HOW TO SEE THE SETPOINT

1. Push and immediately release the SET key: the display will show the Set point value;
2. Push and immediately release the SET key or wait for 5 seconds to display the probe value again.

6.2 HOW TO CHANGE THE SETPOINT

1. Push the SET key for more than 2 seconds to change the Set point value;
2. The value of the set point will be displayed and the "°C" or "°F" LED starts blinking;
3. To change the Set value push the ▲ #or ▼ arrows within 10s.
4. To memorise the new set point value push the SET key again or wait 10s.

6.3 HOW TO START A MANUAL DEFROST

Push the DEF key for more than 2 seconds and a manual defrost will start.

6.4 HOW TO CHANGE A PARAMETER VALUE

To change the parameter's value operate as follows:

1. Enter the Programming mode by pressing the Set + **X** keys for 3s (the "°C" or "°F" LED starts blinking).
2. Select the required parameter. Press the "SET" key to display its value
3. Use "UP" or "DOWN" to change its value.
4. Press "SET" to store the new value and move to the following parameter.

To exit: Press SET + UP or wait 15s without pressing a key.

NOTE: the set value is stored even when the procedure is exited by waiting the time-out to expire.

6.5 THE HIDDEN MENU

The hidden menu Includes all the parameters of the instrument.

6.5.1 HOW TO ENTER THE HIDDEN MENU

1. Enter the Programming mode by pressing the Set + **X** keys for 3s (the "°C" or "°F" LED starts blinking).
2. Released the keys, then push again the Set+**X** keys for more than 7s. The Pr2 label will be displayed immediately followed from the HY parameter.
   NOW YOU ARE IN THE HIDDEN MENU.
3. Select the required parameter.
4. Press the "SET" key to display its value
5. Use **Y #**or **X** to change its value.
6. Press "SET" to store the new value and move to the following parameter.

To exit: Press SET + **Y #**or wait 15s without pressing a key.

NOTE1: if none parameter is present in Pr1, after 3s the "noP" message is displayed. Keep the keys pushed till the Pr2 message is displayed.

NOTE2: the set value is stored even when the procedure is exited by waiting the time-out to expire.

6.5.2 HOW TO MOVE A PARAMETER FROM THE HIDDEN MENU TO THE FIRST LEVEL AND VICEVERSA.

Each parameter present in the HIDDEN MENU can be removed or put into "THE FIRST LEVEL" (user level) by pressing "SET + **X** ".

In HIDDEN MENU when a parameter is present in First Level the decimal point is on.

6.6 HOW TO LOCK THE KEYBOARD

1. Keep pressed for more than 3 s the UP + DOWN keys.
2. The "POF" message will be displayed and the keyboard will be locked. At this point it will be possible only to see the set point or the MAX o Min temperature stored
3. If a key is pressed more than 3s the "POF" message will be displayed.

6.7 TO UNLOCK THE KEYBOARD

Keep pressed together for more than 3s the **Y #**and **X** keys, till the "Pon" message will be displayed.

6.8 THE CONTINUOUS CYCLE

When defrost is not in progress, it can be activated by holding the "**Y** " key pressed for about 3 seconds. The compressor operates to maintain the "ccS" set point for the time set through the "CCt" parameter. The cycle can be terminated before the end of the set time using the same activation key "**Y** " for 3 seconds.

6.9 THE ENERGY SAVING FUNCTION

With "onF = ES", pushing the key, energy saving cycle is enabled: this function allows to change the set point value as the result of the SET+ HES

To stop the energy saving push again the key.

7. PARAMETERS

REGULATION

Hy Differential: (0,1 ÷ 25,5°C / 1÷255 °F) Intervention differential for set point. Compressor Cut IN is Set Point + differential (Hy). Compressor Cut OUT is when the temperature reaches the set point.

LS Minimum set point: (- 50°C÷SET/-58°F÷SET): Sets the minimum value for the set point.

US Maximum set point: (SET÷110°C/ SET÷230°F). Set the maximum value for set point.

Ot Thermostat probe calibration: (-12.0÷12.0°C; -120÷120°F) allows to adjust possible offset of the thermostat probe.

P2P Evaporator probe presence: n= not present: the defrost stops by time; y= present: the defrost stops by temperature.

OE Evaporator probe calibration: (-12.0÷12.0°C; -120÷120°F). allows to adjust possible offset of the evaporator probe.

P3P Third probe presence (P3): n= not present:, the terminal operates as digital input.; y= present:, the terminal operates as third probe.

O3 Third probe calibration (P3): (-12.0÷12.0°C; -120÷120°F). allows to adjust possible offset of the third probe.

P4P Fourth probe presence: (n = Not present; y = present).

o4 Fourth probe calibration: (-12.0÷12.0°C) allows to adjust possible offset of the fourth probe.

OdS Outputs activation delay at start up: (0÷255min) This function is enabled at the initial start up of the instrument and inhibits any output activation for the period of time set in the parameter.

AC Anti-short cycle delay: (0÷50 min) minimum interval between the compressor stop and the following restart.

rtr Percentage of the second and first probe for regulation (0÷100; 100 = P1, 0 = P2): it allows to set the regulation according to the percentage of the first and second probe, as for the following formula (rtr(P1-P2)/100 + P2).

CCt Compressor ON time during continuous cycle: (0.0÷24.0h; res. 10min) Allows to set the length of the continuous cycle: compressor stays on without interruption for the CCt time. Can be used, for instance, when the room is filled with new products.

CCS Set point for continuous cycle: (-50÷150°C) it sets the set point used during the continuous cycle.

COn Compressor ON time with faulty probe: (0÷255 min) time during which the compressor is active in case of faulty thermostat probe. With COn=0 compressor is always OFF.

COF Compressor OFF time with faulty probe: (0÷255 min) time during which the compressor is OFF in case of faulty thermostat probe. With COF=0 compressor is always active.

DISPLAY

CF Temperature measurement unit: °C=Celsius; °F=Fahrenheit. WARNING: When the measurement unit is changed the SET point and the values of the parameters Hy, LS, US, Ot, ALU and ALL have to be checked and modified if necessary).

rES Resolution (for °C): (in = 1°C; dE = 0.1 °C) allows decimal point display.

Lod Instrument display: (P1; P2, P3, P4, SET, dtr): it selects which probe is displayed by the instrument: P1 = Thermostat probe; P2 = Evaporator probe; P3 = Third probe(only for model with this option enabled); P4 = Fourth probe, SET = set point; dtr = percentage of visualization.

rEd X- REP display (*optional*): (P1; P2, P3, P4, SET, dtr): it selects which probe is displayed by X- REP: P1 = Thermostat probe; P2 = Evaporator probe; P3 = Third probe(only for model with this option enabled); P4 = Fourth probe, SET = set point; dtr = percentage of visualization.

dLy Display delay: (0 ÷20.0m; risul. 10s) when the temperature increases, the display is updated of 1 °C/1°F after this time.

dtr Percentage of the second and first probe for visualization when Lod = dtr (0÷100; 100 = P1, 0 = P2): if Lod = dtr it allows to set the visualization according to the percentage of the first and second probe, as for the following formula (dtr(P1-P2)/100 + P2).

DEFROST

dFP Probe selection for defrost termination: nP = no probe; P1 =thermostat probe; P2 = evaporator probe; P3 =configurable probe; P4 = Probe on Hot Key plug.

tdF Defrost type: EL = electrical heater; in = hot gas

dtE Defrost termination temperature: (-50÷50 °C/ -58÷122°F) (Enabled only when EdF=Pb) sets the temperature measured by the evaporator probe, which causes the end of defrost.

IdF Interval between defrost cycles: (0÷120h) Determines the time interval between the beginning of two defrost cycles.

MdF (Maximum) length for defrost: (0÷255min) When P2P = n, (not evaporator probe: timed defrost) it sets the defrost duration, when P2P = y (defrost end based on temperature) it sets the maximum length for defrost.

dSd Start defrost delay: (0÷99min) This is useful when different defrost start times are necessary to avoid overloading the plant.

dFd Temperature displayed during defrost: (rt = real temperature; it = temperature at defrost start; SEt = set point; dEF = "dEF" label)

dAd MAX display delay after defrost: (0÷255min). Sets the maximum time between the end of defrost and the restarting of the real room temperature display.

Fdt Drip time: (0÷120 min) time interval between reaching defrost termination temperature and the restoring of the control's normal operation. This time allows the evaporator to eliminate water drops that might have formed due to defrost.

dPo First defrost after start-up: (y = immediately; n = after the IdF time)

dAF Defrost delay after continuous cycle: (0÷23.5h) time interval between the end of the fast freezing cycle and the following defrost related to it.

ALARMS

ALC Temperature alarms configuration: (Ab; rE)
Ab= absolute temperature: alarm temperature is given by the ALL or ALU values. rE = temperature alarms are referred to the set point. Temperature alarm is enabled when the temperature exceeds the "SET+ALU" or "SET-ALL" values.

ALU MAXIMUM temperature alarm: (SET÷110°C; SET÷230°F) when this temperature is reached the alarm is enabled, after the "ALd" delay time.

ALL Minimum temperature alarm: (-50.0 ÷ SET°C; -58÷230°F when this temperature is reached the alarm is enabled, after the "ALd" delay time.

AFH Differential for temperature alarm recovery: (0,1÷25,5°C; 1÷45°F) Intervention differential for recovery of temperature alarm.

ALd Temperature alarm delay: (0÷255 min) time interval between the detection of an alarm condition and alarm signalling.

dAO Exclusion of temperature alarm at startup: (from 0.0 min to 23.5h) time interval between the detection of the temperature alarm condition after instrument power on and alarm signalling.

CONDENSER TEMPERATURE ALARM (detected by the fourth probe)

AP2 Probe selection for temperature alarm of condenser: nP = no probe; P1 =thermostat probe; P2 = evaporator probe; P3 =configurable probe; P4 = Probe on Hot Key plug.

AL2 Low temperature alarm of condenser: (-55÷150°C) when this temperature is reached the LA2 alarm is signalled, possibly after the Ad2 delay.

Au2 High temperature alarm of condenser: (-55÷150°C) when this temperature is reached the HA2 alarm is signalled, possibly after the Ad2 delay.

AH2 Differential for temperature condenser alarm recovery: (0,1÷25,5°C; 1÷45°F)

Ad2 Condenser temperature alarm delay: (0÷255 min) time interval between the detection of the condenser alarm condition and alarm signalling.

dA2 Condenser temperature alarm exclusion at start up: (from 0.0 min to 23.5h, res. 10min)

bLL Compressor off with low temperature alarm of condenser: n = no: compressor keeps on working; Y = yes, compressor is switched off till the alarm is present, in any case regulation restarts after AC time at minimum.

AC2 Compressor off with high temperature alarm of condenser: n = no: compressor keeps on working; Y = yes, compressor is switched off till the alarm is present, in any case regulation restarts after AC time at minimum.

DIGITAL INPUT

i1P Digital input polarity: oP: the digital input is activated by opening the contact; CL: the digital input is activated by closing the contact.

i1F Digital input configuration: EAL = external alarm: "EA" message is displayed; bAL = serious alarm "CA" message is displayed. PAL = pressure switch alarm, "CA" message is displayed; dor = door switch function; dEF = activation of a defrost cycle; AUS =not enabled; Htr = kind of action inversion (cooling – heating); FAn = not set it; ES = Energy saving.

did: (0÷255 min) with i1F= EAL or i1F = bAL digital input alarm delay: delay between the detection of the external alarm condition and its signalling.
with i1F= dor: door open signalling delay
with i1F = PAL: time for pressure switch function: time interval to calculate the number of the pressure switch activation.

nPS Pressure switch number: (0 ÷15) Number of activation of the pressure switch, during the "did" interval, before signalling the alarm event (I2F= PAL).
If the nPS activation in the did time is reached, switch off and on the instrument to restart normal regulation.

odc Compressor status when open door: no; Fan = normal; CPr; F_C = Compressor OFF.

rrd Outputs restart after doA alarm: no = outputs not affected by the doA alarm; yES = outputs restart with the doA alarm;

HES Temperature increase during the Energy Saving cycle : (-30,0°C÷30,0°C/-22÷86°F) it sets the increasing value of the set point during the Energy Saving cycle.

OTHER

Adr Serial address (1÷244): Identifies the instrument address when connected to a ModBUS compatible monitoring system.
PbC Type of probe: it allows to set the kind of probe used by the instrument: PbC = PBC probe, ntc = NTC probe.
onF Enrgy saving key enabling: nu = disabled; oFF = not set it; ES = enabled.
dP1 Thermostat probe display
dP2 Evaporator probe display
dP3 Third probe display- *optional*.
dP4 Fourth probe display.
rSE Real set point: (readable only), it shows the set point used during the energy saving cycle or during the continuous cycle.
rEL Software release for internal use.
Ptb Parameter table code: readable only.

8. DIGITAL INPUT (ENABLED WITH P3P = N)

The free voltage digital input is programmable in different configurations by the "i1F" parameter.

8.1 DOOR SWITCH INPUT (i1F = dor)

It signals the door status and the corresponding relay output status through the "odc" parameter: no, Fan = normal (any change); CPr, F_C = Compressor OFF.
Since the door is opened, after the delay time set through parameter "did", the door alarm is enabled, the display shows the message "dA" and the regulation restarts is rtr = yES. The alarm stops as soon as the external digital input is disabled again. With the door open, the high and low temperature alarms are disabled.

8.2 GENERIC ALARM (i1F = EAL)

As soon as the digital input is activated the unit will wait for "did" time delay before signalling the "EAL" alarm message. The outputs status don't change. The alarm stops just after the digital input is de-activated.

8.3 SERIOUS ALARM MODE (i1F = bAL)

When the digital input is activated, the unit will wait for "did" delay before signalling the "CA" alarm message. The relay outputs are switched OFF. The alarm will stop as soon as the digital input is de-activated.

8.4 PRESSURE SWITCH (i1F = PAL)

If during the interval time set by "did" parameter, the pressure switch has reached the number of activation of the "nPS" parameter, the "CA" pressure alarm message will be displayed. The compressor and the regulation are stopped. When the digital input is ON the compressor is always OFF.
If the nPS activation in the did time is reached, switch off and on the instrument to restart normal regulation.

8.5 START DEFROST (i1F = dFr)

It starts a defrost if there are the right conditions. After the defrost is finished, the normal regulation will restart only if the digital input is disabled otherwise the instrument will wait until the "MdF" safety time is expired.

8.6 INVERSION OF THE KIND OF ACTION: HEATING-COOLING (i1F = Htr)

This function allows to invert the regulation of the controller: from cooling to heating and viceversa.

8.7 ENERGY SAVING (i1F = ES)

The Energy Saving function allows to change the set point value as the result of the SET+ HES (parameter) sum. This function is enabled until the digital input is activated.

8.8 DIGITAL INPUTS POLARITY

The digital input polarity depends on the "i1P" parameter.
i1P=CL: the input is activated by closing the contact.
i1P=OP: the input is activated by opening the contact

9. TTL SERIAL LINE – FOR MONITORING SYSTEMS

The TTL serial line, available through the HOT KEY connector, allows by means of the external TTL/RS485 converter, XJ485-CX, to connect the instrument to a monitoring system ModBUS-RTU compatible such as the X-WEB500/3000/300.

10. X-REP OUTPUT – OPTIONAL

As optional, an X-REP can be connected to the instrument, trough the HOY KEY connector. The X-REP output **EXCLUDES** the serial connection.

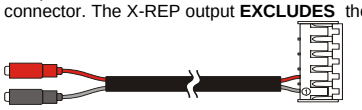

To connect the X-REP to the instrument the following connectors must be used CAB-51F(1m), CAB-52F(2m), CAB-55F(5m),

11. INSTALLATION AND MOUNTING

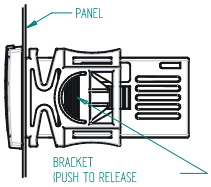

Instrument XR40CX shall be mounted on vertical panel, in a 29x71 mm hole, and fixed using the special bracket supplied.
The temperature range allowed for correct operation is 0÷60 °C. Avoid places subject to strong vibrations, corrosive gases, excessive dirt or humidity. The same recommendations apply to probes. Let air circulate by the cooling holes.

12. ELECTRICAL CONNECTIONS

The instrument is provided with screw terminal block to connect cables with a cross section up to 2,5 mm². Before connecting cables make sure the power supply complies with the instrument's requirements. Separate the probe cables from the power supply cables, from the outputs and the power connections. Do not exceed the maximum current allowed on each relay, in case of heavier loads use a suitable external relay.

12.1 PROBE CONNECTION

The probes shall be mounted with the bulb upwards to prevent damages due to casual liquid infiltration. It is recommended to place the thermostat probe away from air streams to correctly measure the average room temperature. Place the defrost termination probe among the evaporator fins in the coldest place, where most ice is formed, far from heaters or from the warmest place during defrost, to prevent premature defrost termination.

13. HOW TO USE THE HOT KEY

13.1 HOW TO PROGRAM A HOT KEY FROM THE INSTRUMENT (UPLOAD)

1. Program one controller with the front keypad.
2. When the controller is ON, insert the "Hot key" and push Y key; the "uPL" message appears followed a by flashing "End"
3. Push "SET" key and the End will stop flashing.
4. Turn OFF the instrument remove the "Hot Key", then turn it ON again.

NOTE: the "Err" message is displayed for failed programming. In this case push again Y key if you want to restart the upload again or remove the "Hot key" to abort the operation.

13.2 HOW TO PROGRAM AN INSTRUMENT USING A HOT KEY (DOWNLOAD)

1. Turn OFF the instrument.
2. Insert a programmed "Hot Key" into the 5 PIN receptacle and then turn the Controller ON.
3. Automatically the parameter list of the "Hot Key" is downloaded into the Controller memory, the "doL" message is blinking followed a by flashing "End".
4. After 10 seconds the instrument will restart working with the new parameters.
5. Remove the "Hot Key"..

NOTE the message "Err" is displayed for failed programming. In this case turn the unit off and then on if you want to restart the download again or remove the "Hot key" to abort the operation.

14. ALARM SIGNALS

Message	Cause	Outputs
"P1"	Room probe failure	Compressor output acc. to par. "Con" and "COF"
"P2"	Evaporator probe failure	Defrost end is timed
"P3"	Third probe failure	Outputs unchanged
"P4"	Fourth probe failure	Outputs unchanged
"HA"	Maximum temperature alarm	Outputs unchanged.
"LA"	Minimum temperature alarm	Outputs unchanged.
"HA2"	Condenser high temperature	It depends on the "Ac2" parameter
"LA2"	Condenser low temperature	It depends on the "bLL" parameter
"dA"	Door open	Compressor according to rrd
"EA"	External alarm	Output unchanged.
"CA"	Serious external alarm (i1F=bAL)	All outputs OFF.
"CA"	Pressure switch alarm (i1F=PAL)	All outputs OFF

14.1 ALARM RECOVERY

Probe alarms P1", "P2", "P3" and "P4" start some seconds after the fault in the related probe; they automatically stop some seconds after the probe restarts normal operation. Check connections before replacing the probe.
Temperature alarms "HA", "LA" "HA2" and "LA2" automatically stop as soon as the temperature returns to normal values.
Alarms "EA" and "CA" (with i1F=bAL) recover as soon as the digital input is disabled.
Alarm "CA" (with i1F=PAL) recovers only by switching off and on the instrument.

14.2 OTHER MESSAGES

Pon	Keyboard unlocked.
PoF	Keyboard locked
noP	In programming mode: none parameter is present in Pr1 On the display or in dP2, dP3, dP4: the selected probe is nor enabled
noA	None alarm is recorded.

15. TECHNICAL DATA

Housing: self extinguishing ABS.
Case: XR40CX frontal 32x74 mm; depth 60mm;
Mounting: XR40CX panel mounting in a 71x29mm panel cut-out
Protection: IP20; Frontal protection: XR40CX IP65
Connections: Screw terminal block ≤ 2,5 mm² wiring.
Power supply: according to the model: 12Vac/dc, ±10%; 24Vac/dc, ±10%; 230Vac ±10%, 50/60Hz, 110Vac ±10%, 50/60Hz
Power absorption: 3VA max
Display: 3 digits, red LED, 14,2 mm high; Inputs: Up to 4 NTC or PTC probes.
Digital input: free voltage contact
Relay outputs: compressor SPST 8(3) A, 250Vac; or 20(8)A 250Vac
defrost: SPDT 8(3) A, 250Vac
Data storing: on the non-volatile memory (EEPROM).
Kind of action: 1B; Pollution grade: 2;Software class: A.;
Rated impulsive voltage: 2500V; Overvoltage Category: II
Operating temperature: 0÷60 °C;Storage temperature: -30÷85 °C.
Relative humidity: 20÷85% (no condensing)
Measuring and regulation range: NTC probe: -40÷110°C (-40÷230°F);
PTC probe: -50÷150°C (-58÷302°F)
Resolution: 0,1 °C or 1°C or 1 °F (selectable); Accuracy (ambient temp. 25°C): ±0,7 °C ±1 digit

16. CONNECTIONS

The X-REP output excludes the TTL output.. It's present in the following codes:
XR40CX- xx2xx, XR40CX –xx3xx;;

16.1 XR40CX – 8A COMPRESSOR

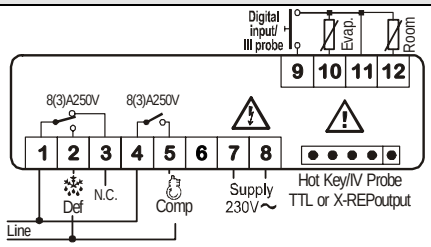

12Vac/dc supply: connect to the terminals 7 and 8.
24Vac/dc supply: connect to the terminals 7 and 8.
120Vac supply: connect to the terminals 7 and 8.

16.2 XR40CX – 20A COMPRESSOR

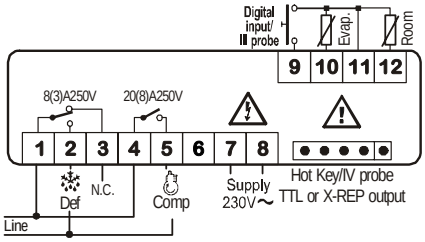

12Vac/dc supply: connect to the terminals 7 and 8.
24Vac/dc supply: connect to the terminals 7 and 8.
120Vac supply: connect to the terminals 7 and 8.

17. DEFAULT SETTING VALUES

Labe	Name	Range	°C/°F	
Set	Set point	LS÷US	-5.0/0	- - -
Hy	Differential	0,1÷25.5°C/ 1÷ 255°F	2.0/4	Pr1
LS	Minimum set point	-50°C÷SET/-58°F÷SET	-50/-58	Pr2
US	Maximum set point	SET÷110°C/ SET ÷ 230°F	110/230	Pr2
Ot	Thermostat probe calibration	-12÷12°C /-120÷120°F	0.0/0	Pr1
P2P	Evaporator probe presence	n=not present; Y=pres.	Y	Pr1
OE	Evaporator probe calibration	-12÷12°C /-120÷120°F	0.0/0	Pr2
P3P	Third probe presence	n=not present; Y=pres.	n	Pr2
O3	Third probe calibration	-12÷12°C /-120÷120°F	0.0/0	Pr2
P4P	Fourth probe presence	n=not present; Y=pres.	n	Pr2
O4	Fourth probe calibration	-12÷12°C /-120÷120°F	0.0/0	Pr2
OdS	Outputs delay at start up	0÷255 min	0	Pr2
AC	Anti-short cycle delay	0 ÷ 50 min	1	Pr1
rtr	P1-P2 percentage for regulation	0 ÷ 100 (100=P1 , 0=P2)	100	Pr2
CCt	Continuos cycle duration	0.0÷24.0h	0.0	Pr2
CCS	Set point for continuous cycle	(-55.0÷150,0°C) (-67÷302°F)	-5/0	Pr2
COn	Compressor ON time with faulty probe	0 ÷ 255 min	15	Pr2
COF	Compressor OFF time with faulty probe	0 ÷ 255 min	30	Pr2
CF	Temperature measurement unit	°C ÷ °F	°C/°F	Pr2
rES	Resolution	in=integer; dE= dec.point	dE /in	Pr1
Lod	Probe displayed	P1;P2	P1	Pr2
rEd[2]	X-REP display	P1 - P2 - P3 - P4 - SEt - dtr	P1	Pr2
dLy	Display temperature delay	0 ÷ 20.0 min (10 sec.)	0	Pr2
dtr	P1-P2 percentage for disply	1 ÷ 99	50	Pr2
tdF	Defrost type	EL=el. heater; in= hot gas	EL	Pr1
dFP	Probe selection for defrost termination	nP; P1; P2; P3; P4	P2	Pr2
dtE	Defrost termination temperature	-50 ÷ 50 °C	8/46	Pr1
IdF	Interval between defrost cycles	1 ÷ 120 ore	6	Pr1
MdF	(Maximum) length for defrost	0 ÷ 255 min	30	Pr1
dSd	Start defrost delay	0÷99min	0	Pr2
dFd	Displaying during defrost	rt, it, SEt, DEF	it	Pr2
dAd	MAX display delay after defrost	0 ÷ 255 min	30	Pr2
Fdt	Draining time	0÷120 min	0	Pr2
dPo	First defrost after startup	n=after IdF; y=immed.	n	Pr2
dAF	Defrost delay after fast freezing	0 ÷ 23h e 50'	0.0	Pr2
ALc	Temperat. alarms configuration	rE= related to set; Ab = absolute	Ab	Pr2
ALU	MAXIMUM temperature alarm	Set÷110.0°C; Set÷230°F	110/230	Pr1
ALL	Minimum temperature alarm	-50.0°C÷Set/ -58°F÷Set	-50/-58	Pr1
AFH	Differential for temperat. alarm recovery	(0,1°C÷25,5°C) (1°F÷45°F)	1/2	Pr2
ALd	Temperature alarm delay	0 ÷ 255 min	15	Pr2
dAO	Delay of temperature alarm at start up	0 ÷ 23h e 50'	1.3	Pr2
AP2	Probe for temperat. alarm of condenser	nP; P1; P2; P3; P4	P4	Pr2
AL2	Condenser for low temperat. alarm	(-55 ÷ 150°C) (-67÷ 302°F)	-40/-40	Pr2
AU2	Condenser for high temperat. alarm	(-55 ÷ 150°C) (-67÷ 302°F)	110/230	Pr2
AH2	Differ. for condenser temp. alar. recovery	[0,1°C ÷ 25,5°C] [1°F ÷ 45°F]	5/4	Pr2
Ad2	Condenser temperature alarm delay	0 ÷ 254 (min.) , 255=nU	15	Pr2
dA2	Delay of cond. temper. alarm at start up	0.0 ÷ 23h 50'	1,3	Pr2
bLL	Compr. off for condenser low temperature alarm	n(0) - Y(1)	n	Pr2
AC2	Compr. off for condenser high temperature alarm	n(0) - Y(1)	n	Pr2
i1P	Digital input polarity	oP=opening;CL=closing	cL	Pr1
i1F	Digital input configuration	EAL, bAL, PAL, dor; dEF; Htr, AUS	EAL	Pr1
did	Digital input alarm delay	0÷255min	5	Pr1
Nps	Number of activation of pressure switch	0 ÷15	15	Pr2
odc	Compress status when open door	no; Fan; CPr; F_C	no	Pr2
rrd	Regulation restart with door open alarm	n – Y	y	Pr2
HES	Differential for Energy Saving	(-30°C÷30°C) (-54°F÷54°F)	0	Pr2
Adr	Serial address	0÷247	1	Pr2
PbC	Kind of probe	Ptc; ntc	ntc	Pr2
onF	on/off key enabling	nu, oFF; ES	ES	Pr1
dP1	Room probe display	--	--	Pr2
dP2	Evaporator probe display	--	--	Pr2
dP3	Third probe display	--	--	Pr1
dP4	Fourth probe display	--	--	Pr1
rSE	Valore set operativo	actual set	--	Pr1
rEL	Software release	--	--	Pr2
Ptb	Map code	--	--	Pr2

[2] Only for models XR40CX–xx2xx, XR40CX–xx3xx;

Dixell S.p.A. Z.I. Via dell'Industria, 27
32010 Pieve d'Alpago (BL) ITALY
tel. +39 - 0437 - 98 33 - fax +39 - 0437 - 98 93 13
E-mail: dixell@dixell.com - http://www.dixell.com

Control Factory (F-C) Settings February 10, 2012 XR40CX- (21-376)							
Label	**Name**	**Set-F**	**Set-C**	**Label**	**Name**	**Set-F**	**Set-C**
Set	Set Point	35	2	**dAF**	**Defrost delay after fast freez**	**0.0**	**0.0**
Hy	Differential	4	2	**ALc**	**Temp. alarm configuration**	**Ab**	**Ab**
LS	**Min Set Point**	**30**	**-1**	ALU	MAX. temperature alarm	45	7
US	**Max. Set Point**	**45**	**7**	ALL	MIN. temperature alarm	32	0
Ot	Thermo Probe Calibration	0	0	**AFH**	**Diff for temp. alarm recovery**	**1**	**1**
P2P	Evap. Probe Presence	Y	Y	**ALd**	**Temp. alarm delay**	**10**	**10**
OE	**Evap. Probe Calibration**	**0**	**0**	**dAO**	**Delay of temp alarm at start up**	**0.2**	**0.2**
P3P	**Third Probe Presence**	**n**	**n**	**AP2**	**Probe for temp. alarm of cond**	**P4**	**P4**
O3	**Third Probe Calibration**	**0**	**0**	**AL2**	**Cond for low temp alarm**	**-4**	**-4**
P4P	**Fourth Probe Presence**	**n**	**n**	**AU2**	**Cond for high temp alarm**	**23**	**23**
O4	**Fourth Probe Calibration**	**0**	**0**	**AH2**	**Diff for cond. Temp alarm rec**	**1**	**1**
OdS	**Output Delay - Start Up**	**1**	**1**	**Ad2**	**Cond temp alarm delay**	**15**	**15**
AC	Anti-Short Cycle Delay	1	1	**dA2**	**Delay of cond temp alarm start up**	**1.3**	**1.3**
rtr	**P1-P2 Percentage**	**100**	**100**	**bLL**	**Comp off for cond low temp alarm**	**n**	**n**
CCt	**Continuous Cycle Duration**	**0**	**0**	**AC2**	Comp off for cond high temp alarm	**n**	**n**
CCS	**Set Point - Continuous Cycle**	**0**	**0**	i1P	Digital input polarity	CL	CL
COn	**Comp. ON - Faulty Probe**	**4**	**4**	i1F	Digital input configuation	EAL	EAL
COF	**Comp. OFF - Faulty Probe**	**6**	**6**	did	Digital input alarm delay	5	5
CF	**Temp. Measure Unit**	**F**	**C**	**Nps**	**Number of act of pressure switch**	**15**	**15**
rES	Resolution	in	in	**odc**	**Compress status when open dr**	**no**	**no**
Lod	**Probe Display**	**P3**	**P3**	**rrd**	**Regulation restart with DR open alarm**	**y**	**y**
dLy	**Display Temp Delay**	**0**	**0**	**HES**	**Differential for energy saving**	**0**	**0**
dtr	**P1-P2 Percentage for Display**	**50**	**50**	**Adr**	**Serial address**	**1**	**1**
tdF	Defrost Type	EL	EL	**PbC**	**Kind of probe**	**NTC**	**NTC**
dFP	**Probe Selection Defrost Term**	**P2**	**P2**	onF	on/off key enabling	no	no
dtE	Defrost Term Temp.	40	4	**dP1**	**Room probe display**	**--**	**--**
IdF	Interval Between Defrost Cycle	24	24	**dP2**	**Evaporator probe display**	**--**	**--**
MdF	Max. Length for Defrost time	60	60	dP3	Third probe display	--	--
dSd	**Start defrost delay**	**0**	**0**	dP4	Fourth probe display	--	--
dFd	**Displaying during defrost**	**it**	**it**	rSE	Valore set operativo	--	--
dAd	**MAX display delay after def.**	**10**	**10**	**rEL**	**Software release**	**1.0**	**1.0**
Fdt	**Draining time**	**0**	**0**	**Ptb**	**Map code**	**--**	**--**
dPO	**First defrost after startup**	**n**	**n**	**BOLD**	**Pr2**		
TO SEE SET POINT TEMPERATURE, PRESS SET KEY AND RELEASE TO DISPLAY SET POINT							
					GR Series		
	BOLD = PARAMETER 2				**GSR Series**		
					SR Series		

ITEM	QUAN.	PART NO.	DESCRIPTION

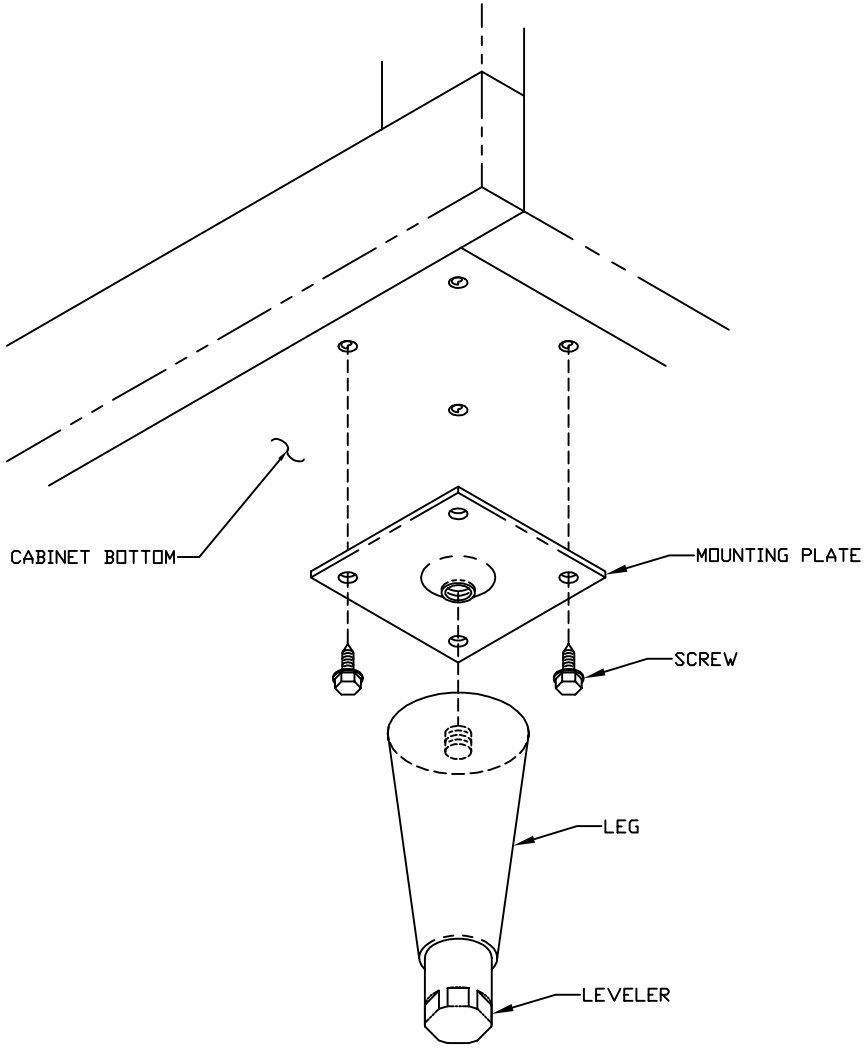

LEG ATTACHMENT:

1) RAISE CABINET FAR ENOUGH OFF OF FLOOR (MIN 8") TO ALLOW LEG INSTALLATION.

2) ATTACH LEG MOUNTING PLATE TO CABINET BOTTOM WITH THE PROVIDED SCREWS.

3) THREAD THE LEG ONTO THE MOUNTING PLATE AND TIGHTEN.

4) GENTLY LOWER THE CABINET TO THE FLOOR AND ADJUST LEVELERS (AS NEEDED).

Howard/McCray

LET.	REVISION	DATE	BY	ECN

DIMENSIONAL TOLERANCES ON PARTS UNLESS OTHERWISE SPECIFIED;
DECIMAL HOLE DIA. & LOCATION +/- 0.016
DECIMAL DIMENSIONS +/- 0.0313
DECIMAL DIMENSIONS-ASSEMBLIES +/- 0.063

SHEAR SIZE: | CNC #
PART SIZE: | YIELD:
MATERIAL | FINISH

PART NAME: LEG INSTALLATION

DRAWN	DATE	SCALE	SHEET	DRAWING NO.
~KWL~	08/29/06	1/2.5	1/1	1SH7789

ITEM	QUAN.	PART NO.	DESCRIPTION

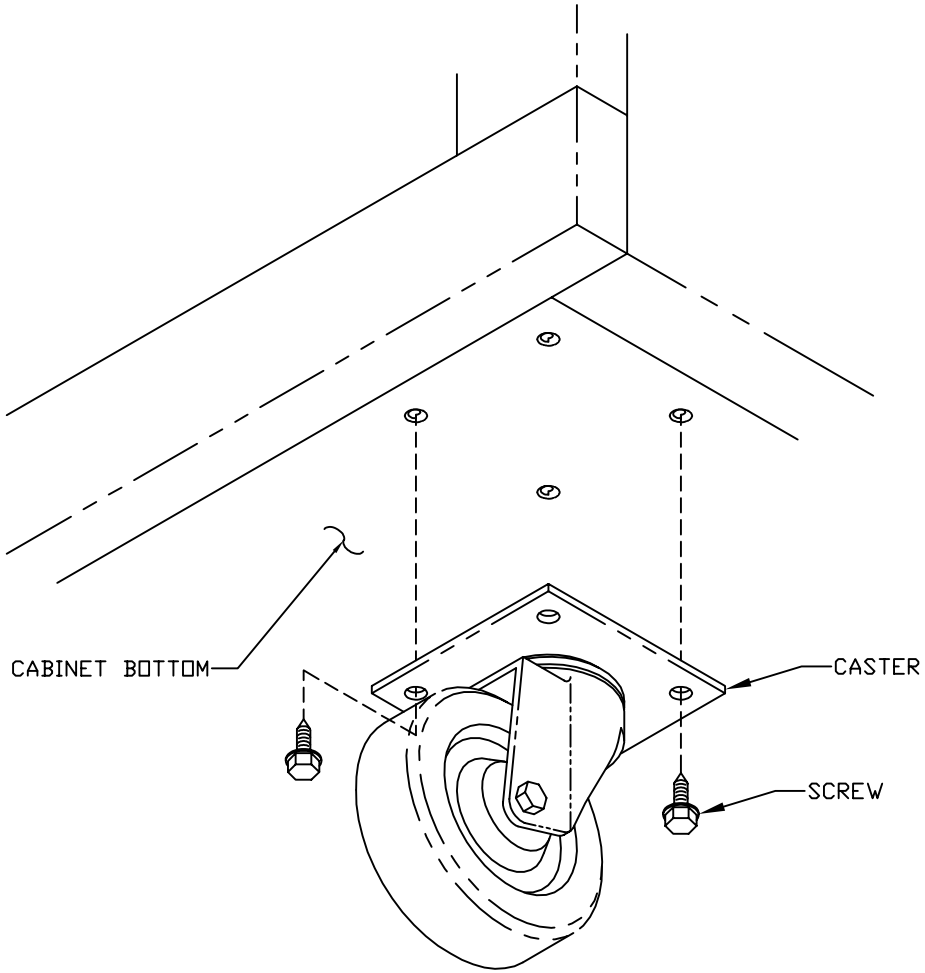

CASTER ATTACHMENT:

1) RAISE CABINET FAR ENOUGH OFF OF FLOOR (MIN 6") TO ALLOW CASTER INSTALLATION.

2) ATTACH CASTER TO CABINET BOTTOM WITH THE PROVIDED SCREWS.

NOTE: AT THE FRONT RIGHT AND LEFT CORNERS OF THE CABINET INSTALL THE (2) CASTERS WITH THE BRAKE.

3) GENTLY LOWER THE CABINET TO THE FLOOR AND PUSH INTO PLACE.

! CAUTION ! DO NOT LEAN OR TILT THE CABINET WHEN INSTALLING OR MOVING.

4) AFTER THE CABINET IS IN POSTION, LOCK THE (2) FRONT CASTERS WITH THE BRAKE, SO THAT THE CABINET WILL NOT MOVE.

Howard/McCray

LET.	REVISION	DATE	BY	ECN

DIMENSIONAL TOLERANCES ON PARTS UNLESS OTHERWISE SPECIFIED;
DECIMAL HOLE DIA. & LOCATION +/- 0.016
DECIMAL DIMENSIONS +/- 0.0313
DECIMAL DIMENSIONS-ASSEMBLIES +/- 0.063

SHEAR SIZE: | CNC #
PART SIZE: | YIELD:
MATERIAL | FINISH

PART NAME: CASTER INSTALLATION

DRAWN	DATE	SCALE	SHEET	DRAWING NO.
~KWL~	08/29/06	1/2.5	1/1	1SH7790

ITEM	QUAN.	PART NO.	DESCRIPTION
1	1	1SH2040	BRACKET - CONDENSATE PAN
2	1	20-206	CONDENSATE PAN KIT
3	1	1SH7000	DRAIN TRAP

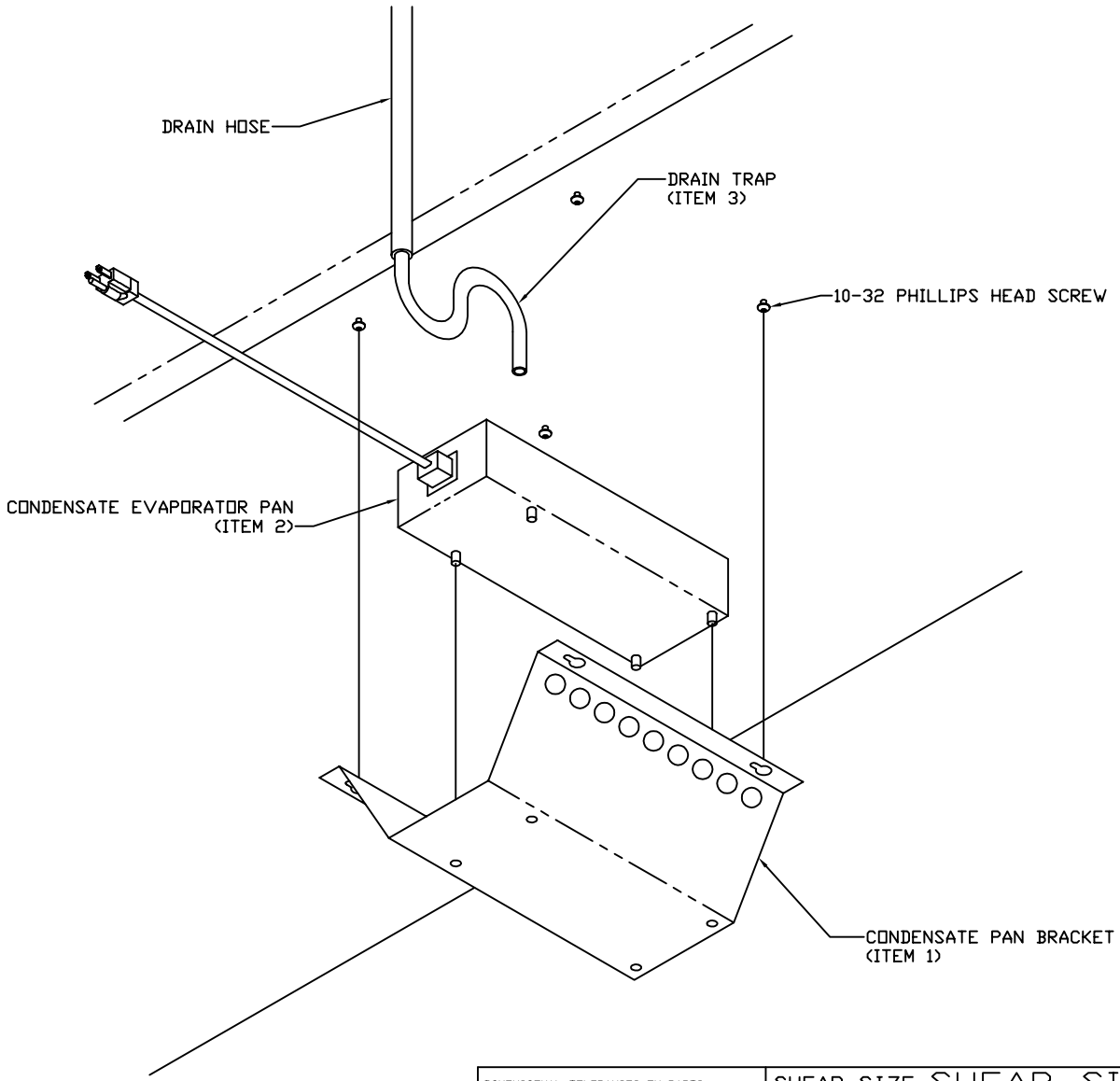

CONDENSATE EVAPORATOR INSTALLATION

THE CONDENSATE EVAPORATOR PAN AND MOUNTING BRACKET ARE PACKED INSIDE THE CABINET.

TO INSTALL THE CONDENSATE EVAPORATOR PAN, PROCEED AS FOLLOWS:

1) LOOSEN THE FOUR (4) (10-32 PHILLIPS HEAD) SCREWS IN THE BOTTOM OF THE CABINET. SLIDE THE EVAPORATOR PAN BRACKET UNDER THE CABINET. INSERT THE SCREWS THROUGH THE KEYHOLE SLOTS IN THE BRACKET, MOVE THE BRACKET FORWARDS AND TIGHTEN THE SCREWS.
2) SET THE CONDENSATE EVAPORATOR PAN INTO THE BRACKET, SO THAT THE FOUR LEGS OF THE PAN FIT INTO THE HOLES IN THE BRACKET.
3) THE CONDENSATE EVAPORATOR PAN IS TO BE SUPPLIED BY A SEPERATE ELECTRICAL POWER SOURCE.
4) INSTALL THE DRAIN TRAP INTO THE DRAIN HOSE AND DIRECT IT INTO THE EVAPORATOR PAN.
5) MOVE THE CABINET INTO ITS FINAL LOCATION.

LET.	REVISION	DATE	BY	ECN

DIMENSIONAL TOLERANCES ON PARTS UNLESS OTHERWISE SPECIFIED;
DECIMAL HOLE DIA. & LOCATION +/- 0.016
DECIMAL DIMENSIONS +/- 0.0313
DECIMAL DIMENSIONS-ASSEMBLIES +/- 0.063

SHEAR SIZE: SHEAR SIZE | CNC # 0000
PART SIZE: PART SIZE | YIELD: 00
MATERIAL: MATERIAL | FINISH: FINISH

Howard/McCray

PART NAME: COND PAN INSTRUCTION

DRAWN	DATE	SCALE	SHEET	DRAWING NO.
~KWL~	10/03/05	1/5	1/1	1SH7788

ITEM	QUAN.	PART NO.	DESCRIPTION

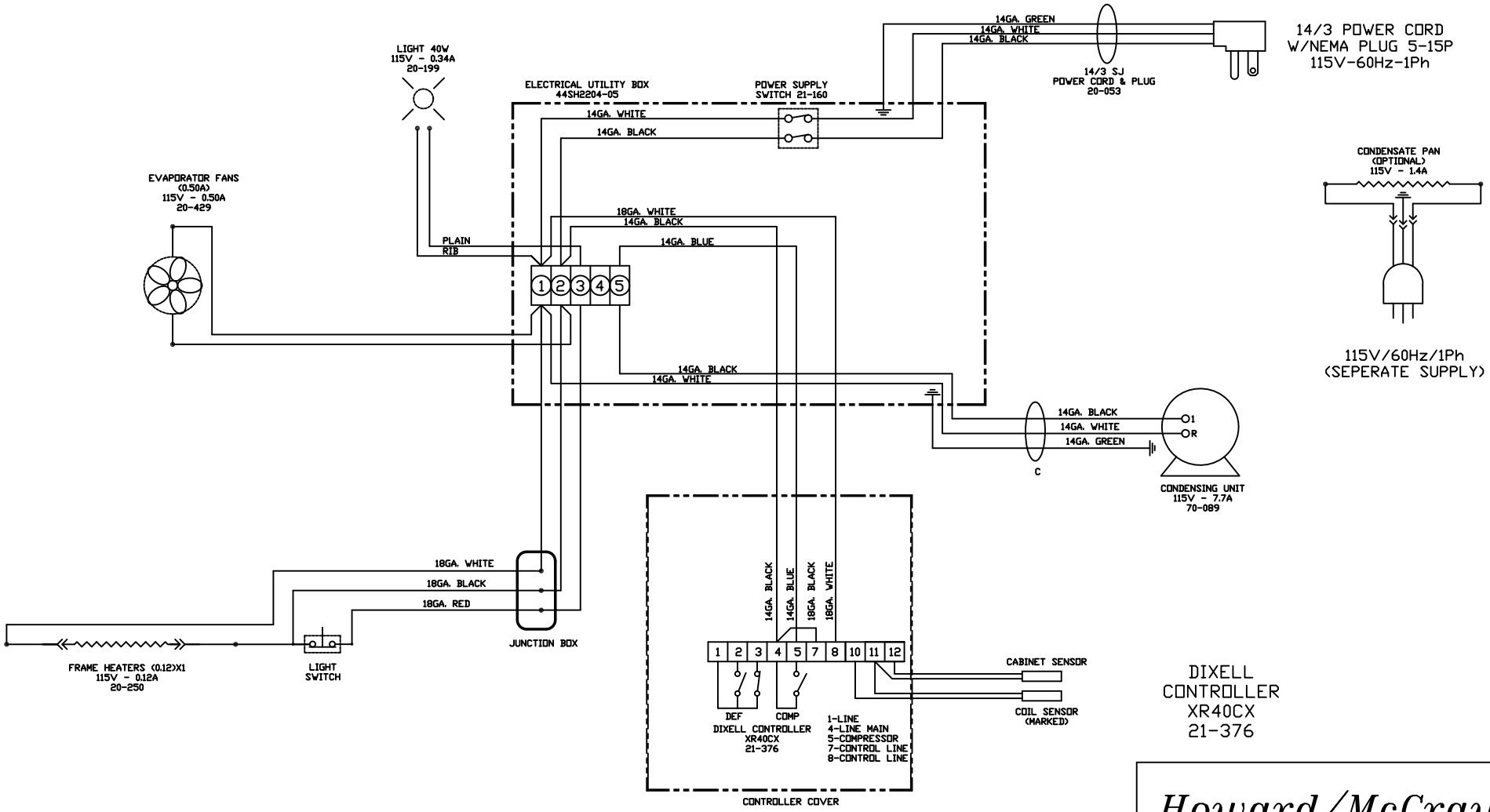

Howard/McCray

LET.	REVISION	DATE	BY	ECN

DIMENSIONAL TOLERANCES ON PARTS
UNLESS OTHERWISE SPECIFIED;
DECIMAL HOLE DIA. & LOCATION +/- 0.016
DECIMAL DIMENSIONS +/- 0.0313
DECIMAL DIMENSIONS-ASSEMBLIES +/- 0.063

SHEAR SIZE: NOTED		CNC # 0000	
PART SIZE: NOTED		YIELD: 00	
MATERIAL NOTED	FINISH NOTED		

PART NAME: WIRING DIAGRAM SR22

DRAWN	DATE	SCALE	SHEET	DRAWING NO.
WDW	02/08/12	1/5	1/1	1SH6514

ITEM	QUAN.	PART NO.	DESCRIPTION

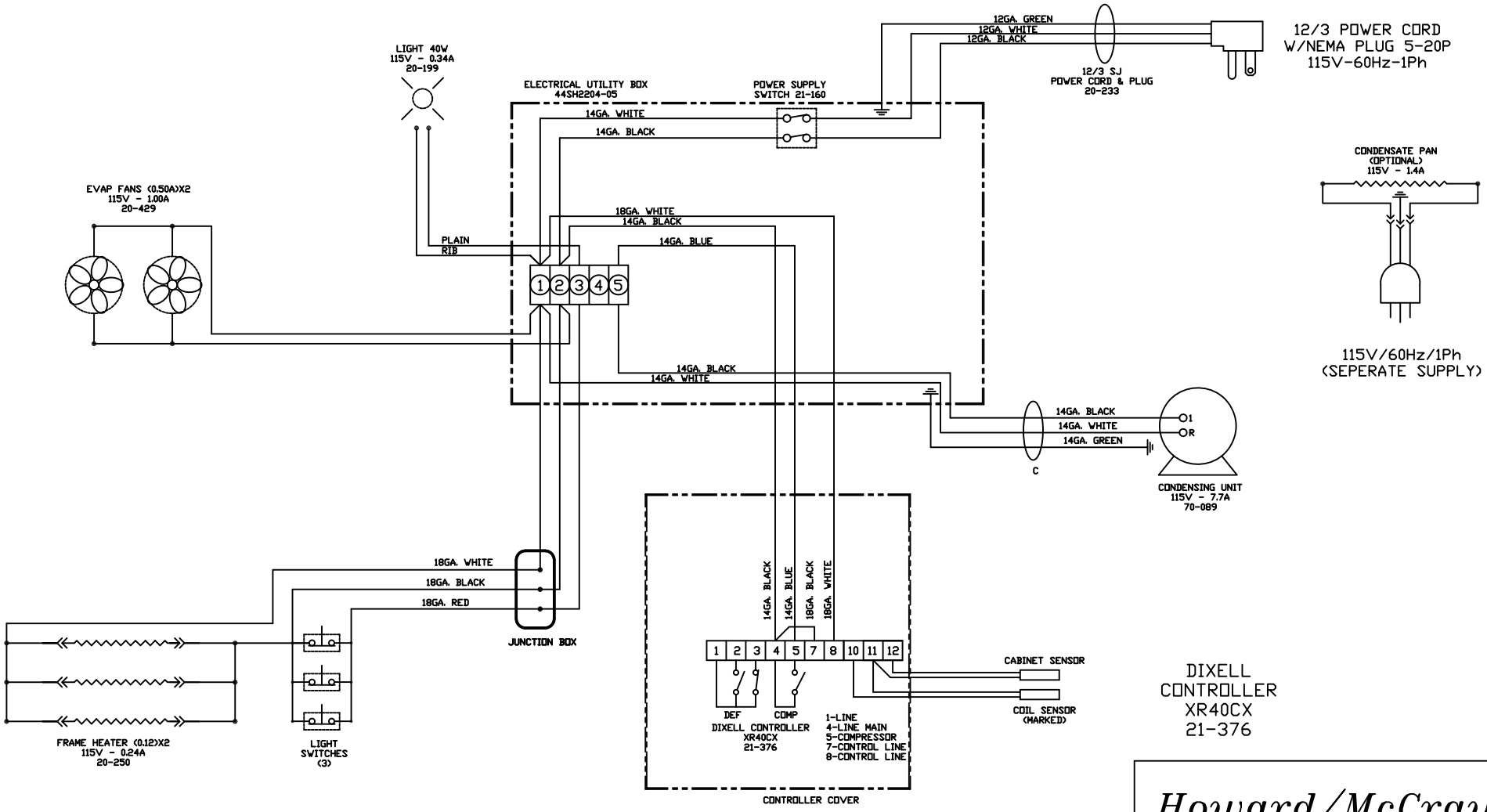

Howard/McCray

LET.	REVISION	DATE	BY	ECN

DIMENSIONAL TOLERANCES ON PARTS
UNLESS OTHERWISE SPECIFIED;
DECIMAL HOLE DIA. & LOCATION +/- 0.016
DECIMAL DIMENSIONS +/- 0.0313
DECIMAL DIMENSIONS-ASSEMBLIES +/- 0.063

SHEAR SIZE: NOTED	CNC # 0000
PART SIZE: NOTED	YIELD: 00
MATERIAL: NOTED	FINISH: NOTED

PART NAME: WIRING DIAGRAM SR75

DRAWN	DATE	SCALE	SHEET	DRAWING NO.
WDW	02/08/12	1/5	1/1	3SH6514

ITEM	QUAN.	PART NO.	DESCRIPTION

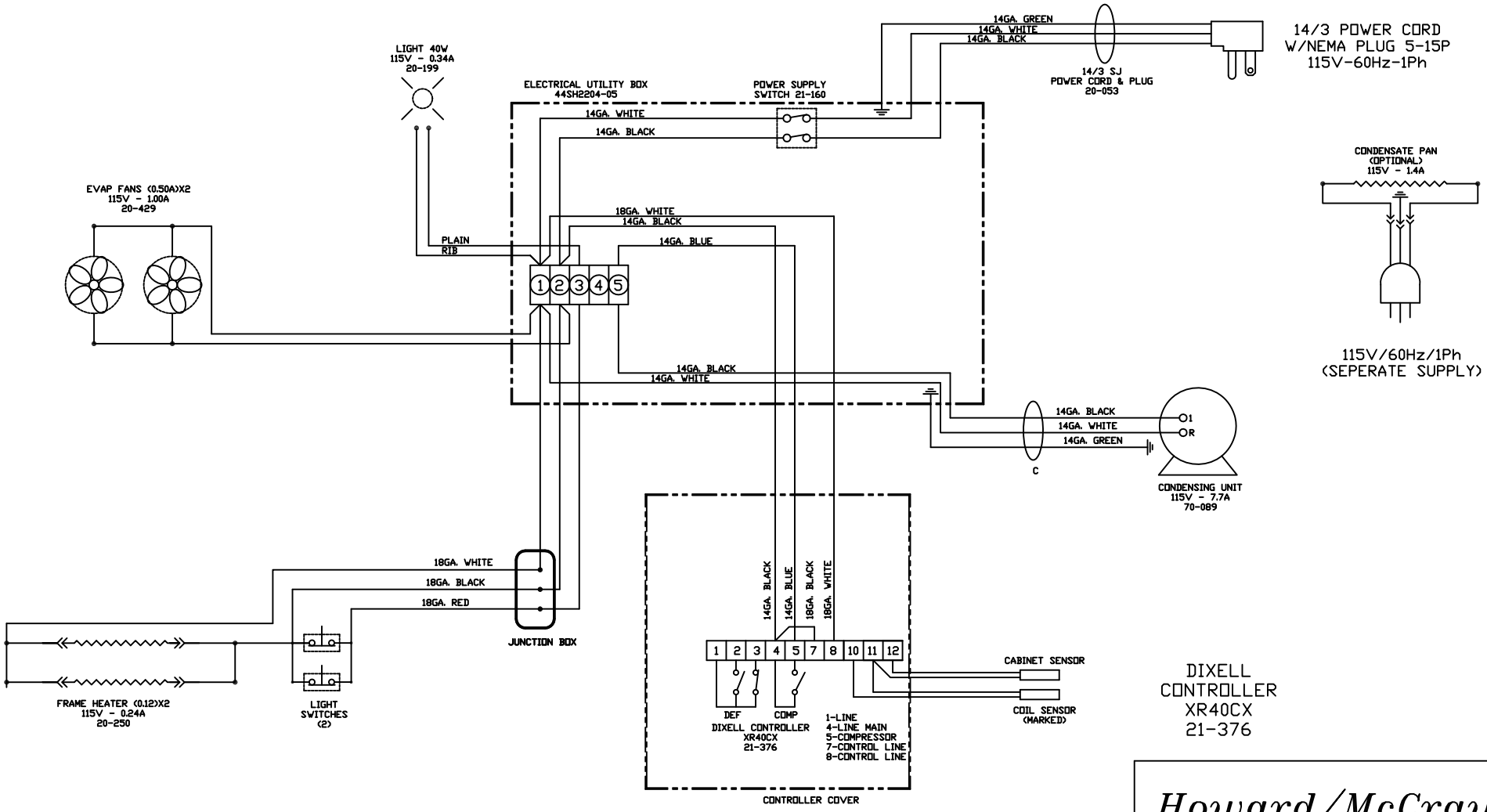

Howard/McCray

DIMENSIONAL TOLERANCES ON PARTS
UNLESS OTHERWISE SPECIFIED;
DECIMAL HOLE DIA. & LOCATION +/- 0.016
DECIMAL DIMENSIONS +/- 0.0313
DECIMAL DIMENSIONS-ASSEMBLIES +/- 0.063

SHEAR SIZE: NOTED
PART SIZE: NOTED
CNC # 0000
YIELD: 00
MATERIAL: NOTED
FINISH: NOTED

PART NAME: WIRING DIAGRAM SR48

DRAWN	DATE	SCALE	SHEET	DRAWING NO.
WDW	02/08/12	1/5	1/1	2SH6514

LET.	REVISION	DATE	BY	ECN