User Manual

Model: X1045
10000mAh Magnetic Wireless Power Stand
for iPhone 15/14/13/12 and subsequent series, Airpods 3

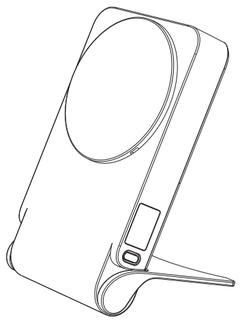

What's Included

User Manual ×1 | Magnetic Power Bank ×1 | 1M USB-A to Type-C Cable ×1

Specifications

Battery Capacity	10000mAh
Type C Input	PD 5V/3A, 9V/2A, 12V/1.5A, 15V/1.8A 27W(Max)
Type C Output	PD 5V/3A, 9V/3A, 12V/3A, 15V/3A, 20V/2.25A 45W(Max)
USB-A Output	5V/3A, 9V/2.22A, 12V/1.67A
Wireless Output	5W, 7.5W, 10W, 15W(Max)
Simultaneous Output	5V/3A
Product size	115.2 x 66 x 24.6 mm
Weight	230 g

Product Structure

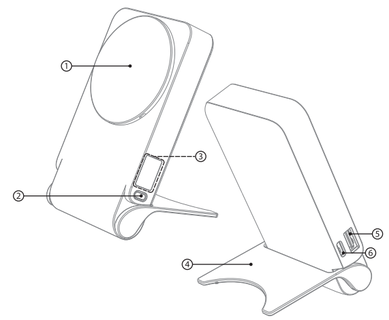

① Wireless Charging Area
② Switch
③ Indicator
④ Foldable Stand
⑤ USB A Output
⑥ Type-C Input/Output

Digital Display Screen

Digital Display

Fully Charged	100
Charging	Real-time Power
Low Power	Number Flashes

Fast Charging Indicator

Fast Charging Mode	⚡⚡ ON
No Fast Charging Mode	⚡⚡ OFF
2 or More Devices Charged Simultaneously	⚡⚡ OFF

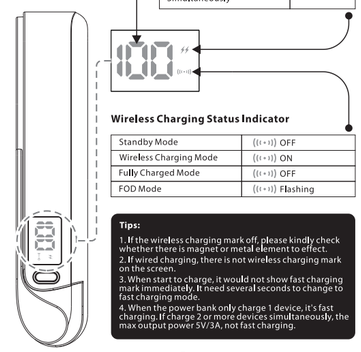

Wireless Charging Status Indicator

Standby Mode	((•)) OFF
Wireless Charging Mode	((•)) ON
Fully Charged Mode	((•)) OFF
FOD Mode	((•)) Flashing

Tips:
1. If the wireless charging mark off, please kindly check whether there is magnet or metal element to effect.
2. If wired charging, there is not wireless charging mark on the screen.
3. When start to charge, it would not show fast charging mark immediately. It need several seconds to change to fast charging mode.
4. When the power bank only charge 1 device, it's fast charging. If charge 2 or more devices simultaneously, the max output power 5V/3A, not fast charging.

Stand

The stable stand of this power can be folded to flat for travelling. Not only a stand, but also a power bank.
When you don't need to charge, it can be a MagSafe stand to support your phone (horizontally or vertically). Just need to press the switch twice to turn off.

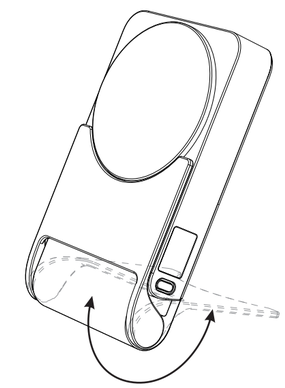

中性版本 不带额定容量 注意区分

How To Use

Use of Switch

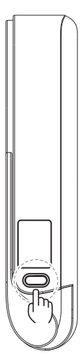

Single Press: Turn on
Double Press: Turn Off

Press the switch once to power on and the battery indicator will light up. Then it's in standby mode and other devices will be charged.
Press the switch twice continuously, it will be power off. And then it will be a magnetic phone stand.

Wireless Charging Operation

Please fit the product with the back of your iPhone (12, 13, 14, 15 series or Airpods 3) or other wireless charging phone (which with Magsafe-compitable ring attached), then it will charge your phone automatically via the built-in magnetic wireless charging. Max to be 15W, and iPhone series is 7.5W due to iPhone's restrict.

Note:
1. The magnetic wireless power bank is mainly used for iPhone 12, iPhone 13, iPhone 14 series, or phones with Magsafe-compitable ring attached (Please note some of Magsafe-compatible rings from the 3rd might not work). And it can also used with Airpods 3.
2. Please press the switch to turn on the power bank before charging your device.

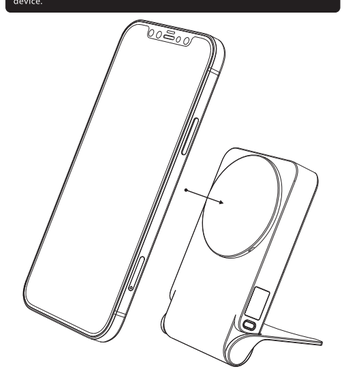

Charging The Power Bank

Please recharge the product when the power or battery is low.
1. Using the included cable, connect the USB-A connector into QC/PD adapter and the Type C connector to the input connector of the power bank.
2. During charging or complete, the battery power LED indicator will show charging status with the specific figures.

Pass Though Charging
You can put your iPhone 12/13/14/15 and subsequent series, AirPods 3 on the wireless charging area and connect this power bank to the power source (PD or QC Adapter). It will charge the power bank itself and your iPhone12/13/14/15 AirPods 3 at the same time.

Note:
While pass though charging, the phone will be in fast charging and power bank is in slow charging. When phone is fully charged, the power bank is in fast charging mode.

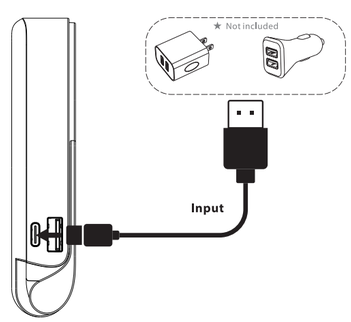

Type C & USB A Output Operation

1.Insert the Type C or USB A connector to your Devices
3.Start Charging

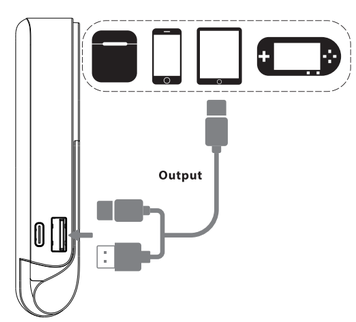

Warning

- Do not drop, misuse or apply excessive force to your power bank. Power banks contain batteries and a circuit board with fragile components that can be damaged if misused.
- If your power bank swells or bulges, stop use immediately and dispose of the power bank in an appropriate manner.
- Store power bank in a cool and dry place. Do not store in hot or humid environments.
- All power banks have safety power cut off features to stop overcharging & overheating.
- When charging a device the power bank may feel warm, this is a normal operating condition & should not be cause for concern.
- It's normal that this charger and your smart phone will be hot under operating conditions and it may be more hotter when charging and using at the same time (such as playing music).
- In normal conditions, battery performance will decline over several years.

Remarks

When your wireless power bank works improperly
1.Make sure there is no any clutters on the wireless power bank, such as magnet, metal, credit card and other foreign object.
2.When the wireless power bank is over-heating take your mobile device away from your wireless power bank and the power bank will stop charging automatically when over-heating. Please try charging again when the wireless power bank cooling down.

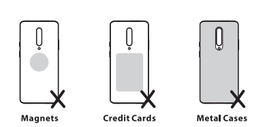

Made in China

品名：	X1045-说明书	规格：	100g 双胶纸 黑白 双面印刷 风琴折 尺寸:80x120 mm
版本：	20231229		
制作：	李志敏		
料号：			

This equipment has been tested and found to comply with the limits for a Class B digital device, pursuant to part 15 of the FCC Rules. These limits are designed to provide reasonable protection against harmful interference in a residential installation. This equipment generates, uses and can radiate radio frequency energy and, if not installed and used in accordance with the instructions, may cause harmful interference to radio communications. However, there is no guarantee that interference will not occur in a particular installation. If this equipment does cause harmful interference to radio or television reception, which can be determined by turning the equipment off and on, the user is encouraged to try to correct the interference by one or more of the following measures:

- Reorient or relocate the receiving antenna.
- Increase the separation between the equipment and receiver.
- Connect the equipment into an outlet on a circuit different from that to which the receiver is connected.
- Consult the dealer or an experienced radio/TV technician for help.

Caution: Any changes or modifications to this device not explicitly approved by manufacturer could void your authority to operate this equipment.

This device complies with part 15 of the FCC Rules. Operation is subject to the following two conditions: (1) This device may not cause harmful interference, and (2) this device must accept any interference received, including interference that may cause undesired operation.

The device has been evaluated to meet general RF exposure requirement.