HONDA

Owner's Manual

WATER PUMP
WX10T

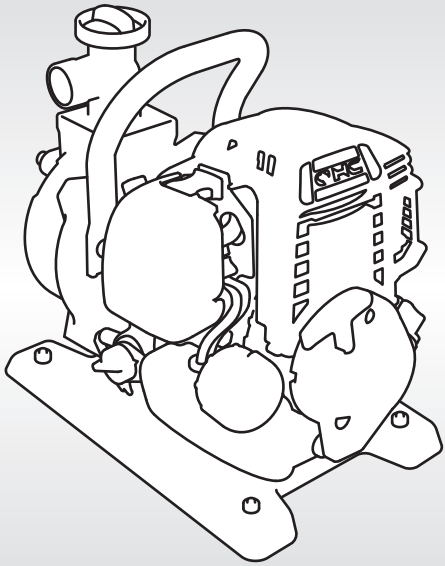

Includes US and Canadian Models

©2024 Honda Motor Co., Ltd. -All Rights Reserved

⚠ WARNING: ⚠

The engine exhaust from this product contains chemicals known to the State of California to cause cancer, birth defects or other reproductive harm.

Keep this owner's manual handy, so you can refer to it any time. This owner's manual is considered a permanent part of the water pump and should remain with the water pump if resold.

The information and specifications included in this publication were in effect at the time of approval for printing. Honda Motor Co., Ltd. reserves the right, however, to discontinue or change specifications or design at any time without notice and without incurring any obligation whatsoever. No part of this publication may be reproduced without written permission.

INTRODUCTION

Congratulations on your selection of a Honda water pump. We are certain you will be pleased with your purchase of one of the finest water pumps on the market.

We want to help you get the best results from your new water pump and to operate it safely. This manual contains the information on how to do that; please read it carefully.

As you read this manual, you will find information preceded by a **NOTICE** symbol. That information is intended to help you avoid damage to your water pump, other property, or the environment.

We suggest you read the *Distributor's Limited Warranty (U.S.) / Distributor's Warranty (CA.)* to fully understand its coverage and your responsibilities of ownership. The *Distributor's Limited Warranty (U.S.) / Distributor's Warranty (CA.)* is a separate document that should have been given to you by your dealer. If not, you can obtain a copy from your dealer or download the Distributor's Limited Warranty (U.S.) / Distributor's Warranty (CA.) from:
U.S.A http://powerequipment.honda.com/support/warranty
Canada http://powerequipment.honda.ca/parts-service/warranty

When your water pump needs scheduled maintenance, keep in mind that your Honda servicing dealer is specially trained in servicing Honda water pumps. Your Honda servicing dealer is dedicated to your satisfaction and will be pleased to answer your questions and concerns.

INTRODUCTION

A FEW WORDS ABOUT SAFETY

Your safety and the safety of others are very important. And using this water pump safely is an important responsibility.

To help you make informed decisions about safety, we have provided operating procedures and other information on labels and in this manual. This information alerts you to potential hazards that could hurt you or others.

Of course, it is not practical or possible to warn you about all the hazards associated with operating or maintaining a water pump. You must use your own good judgment.

You will find important safety information in a variety of forms, including:

- **Safety Labels** — on the pump.
- **Safety Messages** — preceded by a safety alert symbol ⚠ and one of three signal words, DANGER, WARNING, or CAUTION.

  These signal words mean:

  ⚠ DANGER You WILL be KILLED or SERIOUSLY HURT if you don't follow instructions.

  ⚠ WARNING You CAN be KILLED or SERIOUSLY HURT if you don't follow instructions.

  ⚠ CAUTION You CAN be HURT if you don't follow instructions.

- **Safety Headings** — such as *IMPORTANT SAFETY INFORMATION*.
- **Safety Section** — such as *PUMP SAFETY*.
- **Instructions** — how to use this pump correctly and safely.

This entire book is filled with important safety information — please read it carefully.

CONTENTS

PUMP SAFETY 5
IMPORTANT SAFETY INFORMATION 5
SAFETY LABEL LOCATIONS 7

CONTROLS 8
COMPONENT & CONTROL LOCATIONS 8
CONTROLS 9
Ignition Switch 9
Choke Lever 9
Throttle Lever 10
Recoil Starter Grip 10

BEFORE OPERATION 11
ARE YOU READY TO GET STARTED? 11
IS YOUR PUMP READY TO GO? 11
Check the General Condition of the Pump 12
Check the Suction and Discharge Hoses 12
Check the Engine 12

OPERATION 13
SAFE OPERATING PRECAUTIONS 13
PUMP PLACEMENT 15
SUCTION HOSE INSTALLATION 16
DISCHARGE HOSE INSTALLATION 17
OPTIONAL GARDEN HOSE INSTALLATION (discharge only) 18
PRIMING THE PUMP 19
STARTING THE ENGINE 21
SETTING ENGINE SPEED 24
STOPPING THE ENGINE 25

SERVICING YOUR PUMP 26
THE IMPORTANCE OF MAINTENANCE 26
MAINTENANCE SAFETY 27
MAINTENANCE SCHEDULE 28
REFUELING 29
FUEL RECOMMENDATIONS 30
ENGINE OIL LEVEL CHECK 31
ENGINE OIL CHANGE 32
ENGINE OIL RECOMMENDATIONS 34
AIR CLEANER SERVICE 35

CONTENTS

SERVICING YOUR PUMP (continued)
AIR FILTER CLEANING 36
SPARK PLUG SERVICE 37
COOLING FIN INSPECTION 40
FUEL FILTER INSPECTION and FUEL TANK CLEANING 41
FUEL TUBE INSPECTION 43
SPARK ARRESTER SERVICE 44

STORAGE 46
STORAGE PREPARATION 46
Cleaning 46
Fuel 48
Engine Oil 51
Engine Cylinder 51
STORAGE PRECAUTIONS 52
REMOVAL FROM STORAGE 52

TRANSPORTING 53

TAKING CARE OF UNEXPECTED PROBLEMS 54
ENGINE 54
Engine Will Not Start 54
Engine Lacks Power 54
PUMP 55
No Pump Output 55
Low Pump Output 55

TECHNICAL INFORMATION 56
Serial Number Locations 56
Carburetor Modification for High Altitude Operation 57
EMISSION CONTROL SYSTEM INFORMATION 58
Air Index 60
EMISSION CONTROL SYSTEM WARRANTY 61
Specifications 62

CONSUMER INFORMATION 63
Dealer Locator Information 63
Honda Publications 63
Customer Service Information 64

QUICK REFERENCE INFORMATION ..... Inside back cover

PUMP SAFETY

IMPORTANT SAFETY INFORMATION

The Honda WX10T pump is designed to pump only fresh water that is not intended for human consumption, and other uses can result in injury to the operator or damage to the pump and other property.

Most injuries or property damage can be prevented if you follow all instructions in this manual and on the pump. The most common hazards are discussed below, along with the best way to protect yourself and others.

Operator Responsibility

It is the operator's responsibility to provide the necessary safeguards to protect people and property. Know how to stop the pump quickly in case of emergency. If you leave the pump for any reason, always turn the engine off. Understand the use of all controls and connections.

Be sure that anyone who operates the pump receives proper instruction. Do not let children operate the pump. Keep children and pets away from the area of operation.

Pump Operation

Pump only water that is not intended for human consumption. Pumping flammable liquids, such as gasoline or fuel oils, can result in a fire or explosion, causing serious injury. Pumping sea water, beverages, acids, chemical solutions, or any other liquid that promotes corrosion can damage the pump.

Refuel With Care

Gasoline is extremely flammable, and gasoline vapor can explode.
Do not refuel during operation.
Allow the engine to cool if it has been in operation.
Refuel only outdoors in a well-ventilated area and on a level surface.
Never smoke near gasoline, and keep other flames and sparks away.
Do not overfill the fuel tank.
Make sure that any spilled fuel has been wiped up and cleaned before starting the engine.
Always store gasoline in an approved container.

PUMP SAFETY

Fire and Burn Hazards

- The exhaust system gets hot enough to ignite some materials.
  - Keep the pump at least 3 feet (1 meter) away from buildings and other equipment during operation.
  - Do not enclose the pump in any structure.
  - Keep flammable materials away from the pump.

- The muffler becomes very hot during operation and remains hot for a while after stopping the engine. Be careful not to touch the muffler while it is hot. Let the engine cool before storing the pump indoors.

Carbon Monoxide Hazard

Your water pump's exhaust contains poisonous carbon monoxide gas, which you cannot see or smell.
Breathing carbon monoxide can KILL YOU IN MINUTES.
For your safety:

- Do not start or operate the engine in any closed or partially enclosed area, such as a garage.

- Never run the water pump in a closed or even partially closed area where people or pets may be present.

- Never operate the water pump near open doors, windows, or vents.

- Get fresh air and seek medical attention immediately if you suspect you have inhaled carbon monoxide.

Early symptoms of carbon monoxide exposure include headache, fatigue, shortness of breath, nausea, and dizziness. Continued exposure to carbon monoxide can cause loss of muscular coordination, loss of consciousness, and then death.

SAFETY LABEL LOCATIONS

The labels shown here contain important safety information. Please read them carefully. These labels are considered permanent parts of your pump. If a label comes off or becomes hard to read, contact your servicing dealer for a replacement.

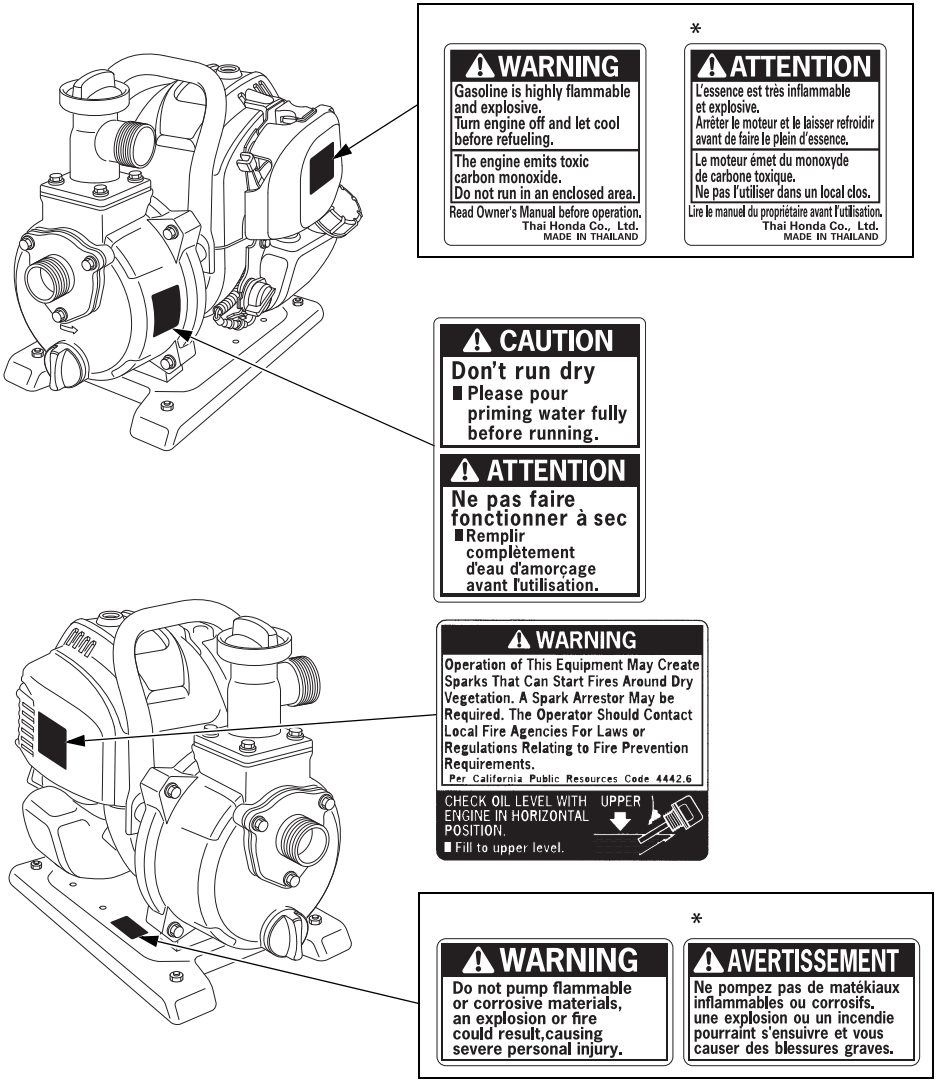

*: Canadian type only
French labels come with the water pump.

CONTROLS

COMPONENT & CONTROL LOCATIONS

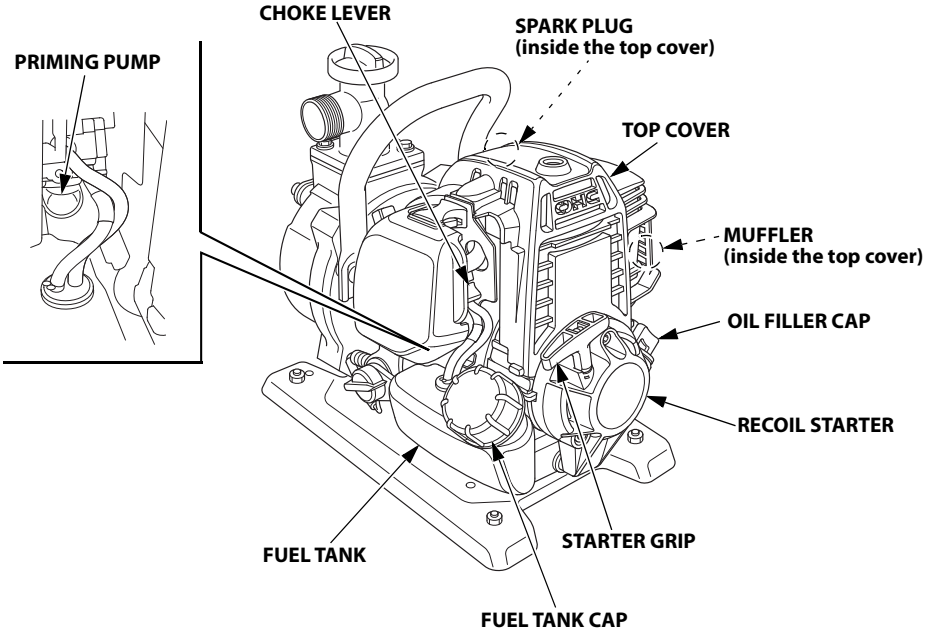

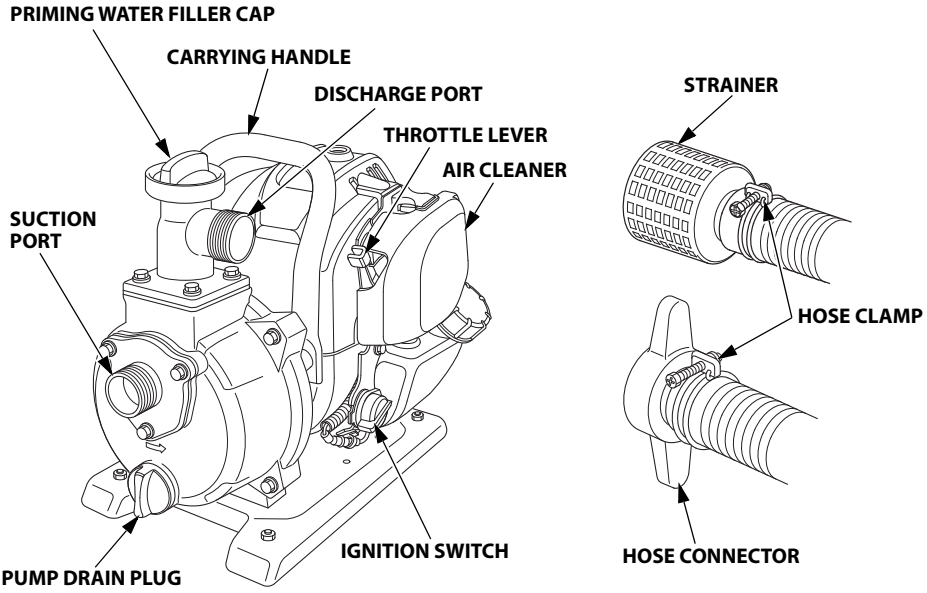

CONTROLS

Ignition Switch

The ignition switch controls the ignition system.

The ignition switch must be in the ON position for the engine to run.

Turning the ignition switch to the OFF position stops the engine.

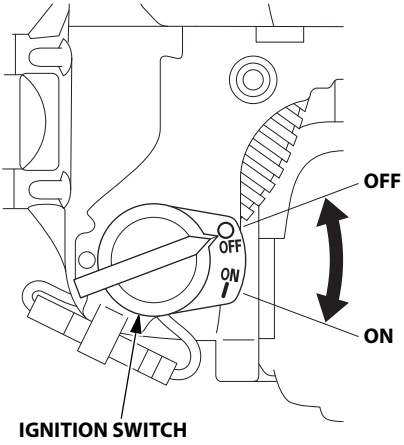

Choke Lever

The choke lever opens and closes the choke valve in the carburetor.

The CLOSED position enriches the fuel mixture for starting a cold engine.

The OPEN position provides the correct fuel mixture for operation after starting, and for restarting a warm engine.

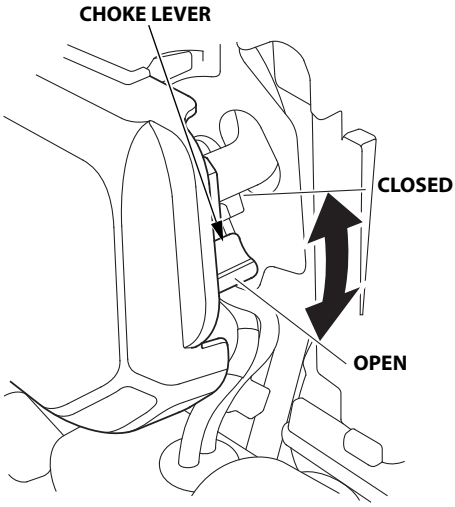

Throttle Lever

The throttle lever controls engine speed.

Moving the throttle lever in the directions shown makes the engine run faster or slower.

Pump output is controlled by adjusting the throttle lever. At the FAST position, the pump will deliver the highest output volume. Moving the throttle lever toward the SLOW position will decrease the output volume of the pump.

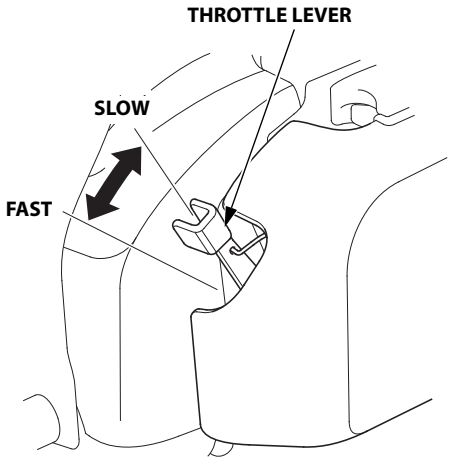

Recoil Starter Grip

Pulling the starter grip operates the recoil starter to crank the engine for starting.

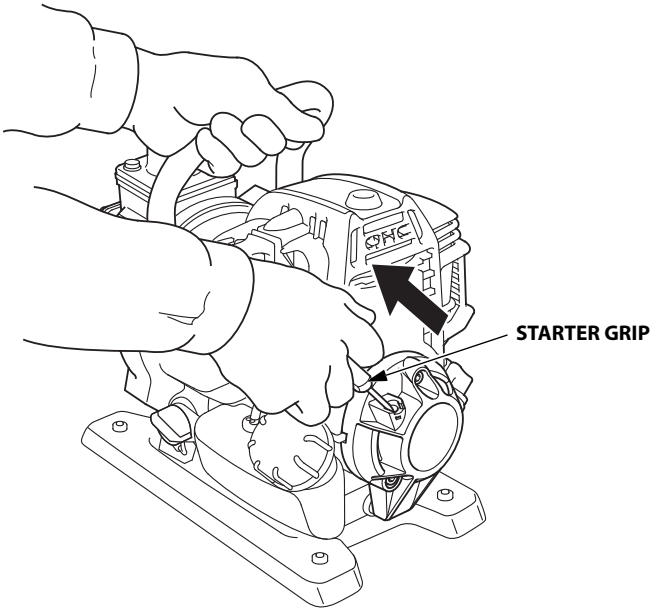

BEFORE OPERATION

ARE YOU READY TO GET STARTED?

Your safety is your responsibility. A little time spent in preparation will significantly reduce your risk of injury.

Knowledge

Read and understand this manual. Know what the controls do and how to operate them.

Familiarize yourself with the pump and its operation before you begin pumping. Know what to do in case of emergencies.

Be sure of what you are pumping. This pump is designed to pump only fresh water that is not intended for human consumption.

IS YOUR PUMP READY TO GO?

For your safety, and to maximize the service life of your equipment, it is very important to take a few moments before you operate the pump to check its condition. Be sure to take care of any problem you find, or have your servicing dealer correct it, before you operate the pump.

⚠ WARNING

Failure to properly maintain this pump, or failing to correct a problem before operation, could result in a significant malfunction.

Some malfunctions can cause serious injuries or death.

Always perform a pre-operation inspection before each operation and correct any problems.

To prevent fire hazards, keep the pump at least 3 feet (1 meter) away from building walls and other equipment during operation. Do not place flammable objects close to the engine.

Before beginning your pre-operation checks, be sure the pump is on a level surface and the ignition switch is in the OFF position.

Check the General Condition of the Pump

- Remove any excessive dirt or debris, especially around the engine muffler, and recoil starter.
- Look for signs of damage.
- Check that all nuts, bolts, screws, hose connectors and clamps are tightened.

Check the Suction and Discharge Hoses

- Check the general condition of the hoses. Be sure the hoses are in serviceable condition before connecting them to the pump. Remember that the suction hose must be reinforced construction to prevent hose collapse.
- Check that the hose coupling packings in the suction hose and discharge hose connectors are in good condition (see pages 16 and 17).
- Check that the hose connectors and clamps are securely installed (see pages 16 and 17).
- Check that the strainer is in good condition and is installed on the suction hose (see page 16).

Check the Engine

- Before each use, look around and underneath the engine for signs of oil or gasoline leaks.
- Check the engine oil level (see page 31). Running the engine with a low oil level can cause engine damage.
- Check the air filter (see page 35). A dirty air filter will restrict air flow to the carburetor, reducing engine and pump performance.
- Check the fuel level (see page 29). Starting with a full tank will help to eliminate or reduce operating interruptions for refueling.

OPERATION

SAFE OPERATING PRECAUTIONS

To safely realize the full potential of this pump, you need a complete understanding of its operation and a certain amount of practice with its controls.

Before operating the pump for the first time, please review the *IMPORTANT SAFETY INFORMATION* on page 5 and the chapter titled *BEFORE OPERATION*.

For your safety, avoid starting or operating the engine in an enclosed area, such as a garage. Your engine's exhaust contains poisonous carbon monoxide gas that can collect rapidly in an enclosed area and cause illness or death.

⚠ WARNING

Exhaust contains poisonous carbon monoxide gas that can build up to dangerous levels in closed areas.

Breathing carbon monoxide can cause unconsciousness or death.

Never run this product's engine in a closed, or even partly closed area.

Pump only fresh water that is not intended for human consumption. Pumping flammable liquids, such as gasoline or fuel oils, can result in a fire or explosion, causing serious injury. Pumping sea water, beverages, acids, chemical solutions, or any other liquid that promotes corrosion can damage the pump.

NOTICE

Do not allow the pump to tip over or fall in its side during use. If the pump is not positioned upright or if there is not enough space around the pump, cooling air can become restricted or the engine exhaust may be obstructed, causing engine damage.

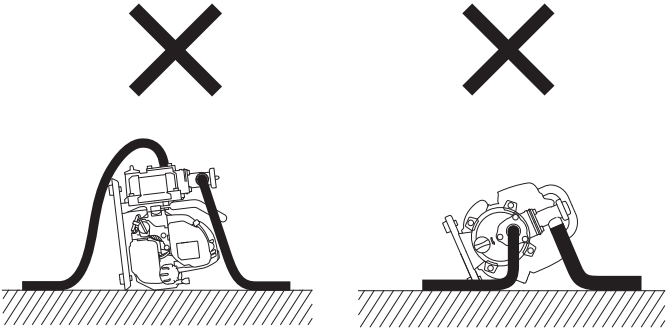

PUMP PLACEMENT

Always position the pump in an upright position on a firm level surface at least 3 feet (1 meter) away from any walls or other equipment.

For best pump performance, place the pump near the water level, and use hoses that are no longer than necessary. That will enable the pump to produce the greatest output with the least self-priming time.

As *head* (pumping height) increases, pump output decreases. Maximum head specifications are shown in the tables on page 62. The length, type, and size of the suction and discharge hoses can also significantly affect pump output.

Discharge head capability is always greater than suction head capability, so it is important for suction head to be the shorter part of total head.
The maximum available suction head will vary based on the operating conditions. However, the suction head can never exceed 26 feet (8 meters) and should always be kept as low as possible.

Minimizing suction head (placing the pump near the water level) is also very important for reducing self-priming time. Self-priming time is the time it takes the pump to bring water the distance of the suction head during initial operation.

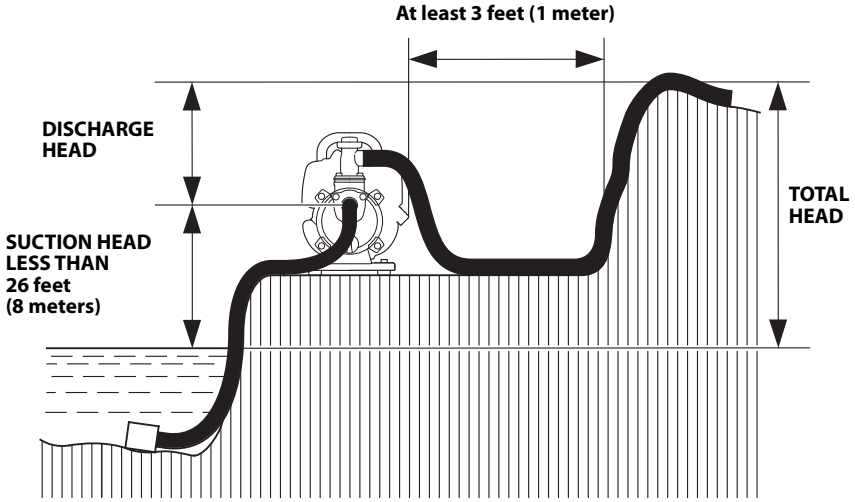

SUCTION HOSE INSTALLATION

Use the hose, hose connector, and hose clamp provided with the pump. The suction hose must be reinforced with a noncollapsible wall or braided wire construction to prevent suction hose collapse.

The suction hose should be no longer than necessary. Pump performance is best when the pump is near the water level, and the hoses are short.

Never use a suction hose with an inside diameter less than 1.0 inch (25 mm).

1. Verify that the hose coupling packing is in good condition.
2. Securely tighten the hose connector to the pump suction port.
3. Install the suction hose to the hose connector.
   Use a hose clamp to securely fasten the suction hose to the hose connector in order to prevent air leakage and loss of suction.

Install the strainer (provided with the pump) on the other end of the suction hose, and secure it with a hose clamp. The strainer will help to prevent the pump from becoming clogged or damaged by debris.
Never operate the pump without the strainer installed.

NOTICE

Always use the included strainer or one with an equivalent mesh size. Operating the pump without a strainer may result in severe pump damage.

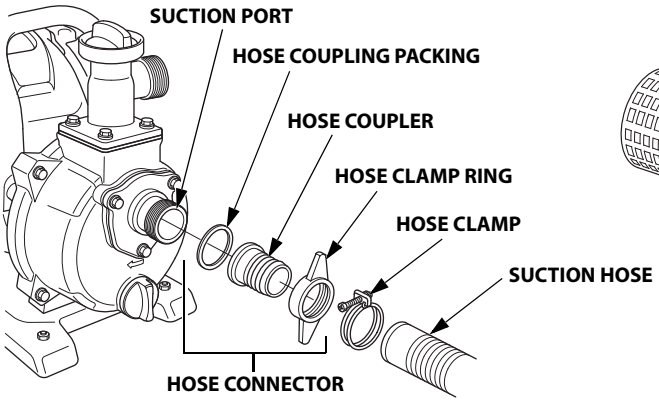

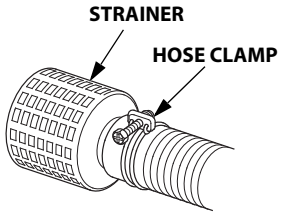

DISCHARGE HOSE INSTALLATION

1. Verify that the hose coupling packing is in good condition.
2. Securely tighten the hose connector to the pump discharge port.
3. Install the discharge hose to the hose connector.
   Use a hose clamp to securely fasten the discharge hose to prevent the discharge hose from disconnecting from the hose connector under high pressure.

It is best to use a short, large-diameter hose, because this will reduce fluid friction and improve pump performance. A long or small-diameter hose will increase fluid friction and reduce pump output.
If the discharge hose is equipped with a shutoff valve or nozzle, do not shut off the discharge water for a long period of time, as that could cause the pump to overheat.

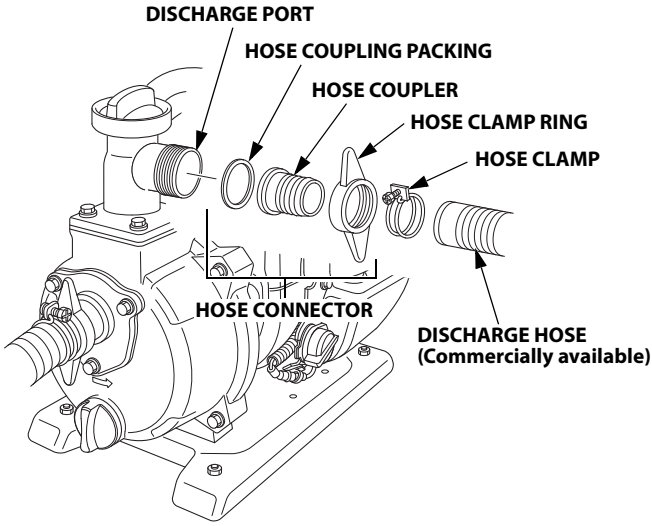

OPTIONAL GARDEN HOSE INSTALLATION (discharge only)

An adapter is supplied with the pump for optional connection of a garden hose to the pump discharge port. Garden hose is a convenient and economical option for carrying the discharged water, though its smaller diameter will reduce the maximum discharge capacity of the pump.
Hand-tighten the adapter, just tight enough to prevent leakage, then attach the garden hose to the adapter.

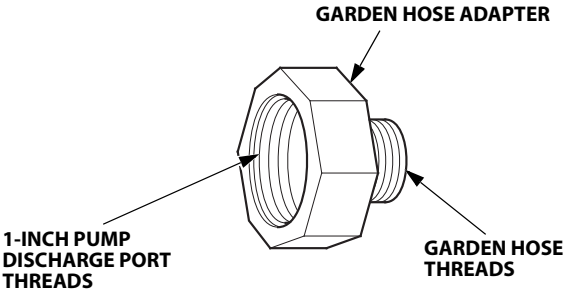

NOTICE

- *Overtightening the adapter can damage the threads.*
- *If the garden hose is equipped with a shut off valve or nozzle, do not shut off the discharge water for a long period of time, as that could cause the pump to overheat.*
- *Do not install the adapter on the pump suction port. Garden hose is not suitable for use as suction hose, because it will restrict flow and cause the pump to cavitate, damaging the pump.*

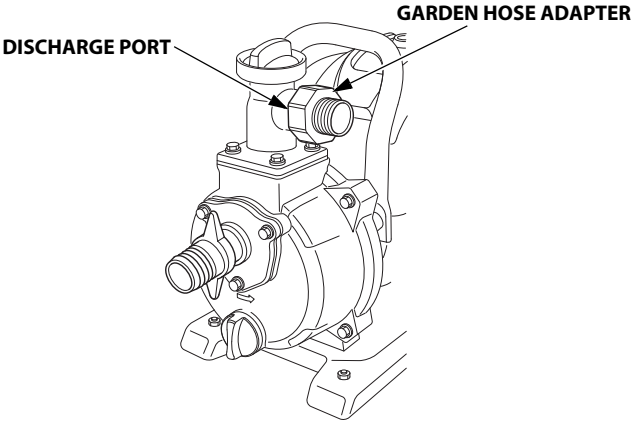

PRIMING THE PUMP

Before starting the engine, remove the filler cap from the pump chamber, and fill the pump chamber with water up to its priming water filling level. Reinstall the filler cap, and tighten it securely.

NOTICE

Operating the pump dry will destroy the pump seal. If the pump has been operated dry, stop the engine immediately, and allow the pump to cool before priming.

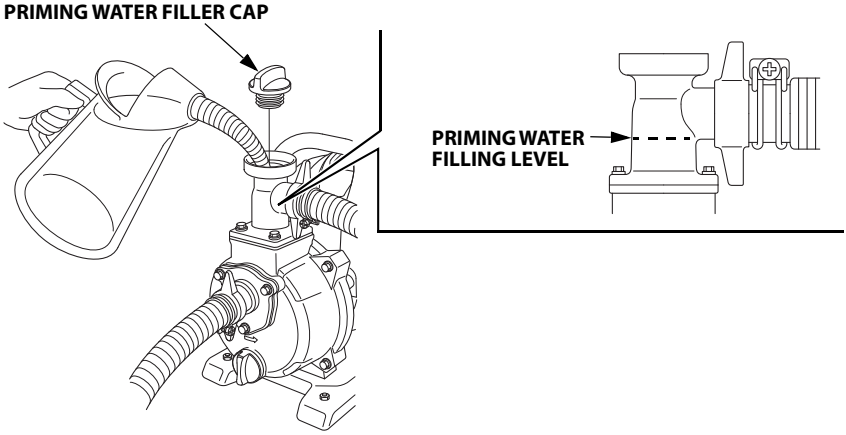

If the discharge hose must run across a roadway, the hose should cross the roadway perpendicular to traffic flow. Also, heavy boards should be placed next to the hose so the motor vehicle weight does not shut off the discharge as vehicles cross over the hose.

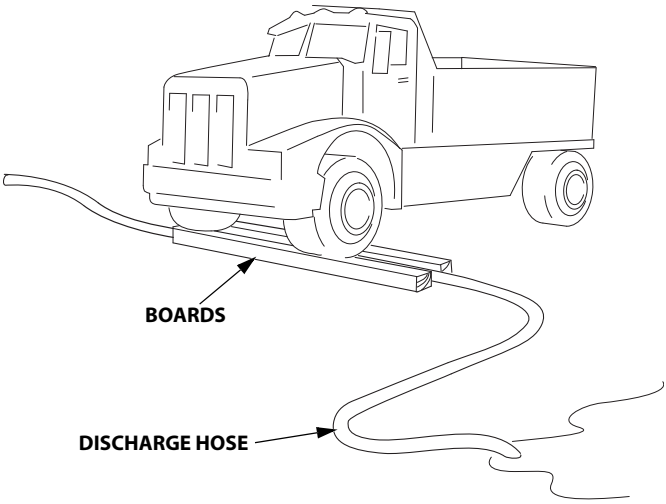

Driving over a discharge hose while the pump is running, or even possibly when the pump is stopped, may cause pump case failure.

STARTING THE ENGINE

1. To start a cold engine, move the choke lever to the CLOSED position.

   To restart a warm engine, leave the choke lever in the OPEN position.

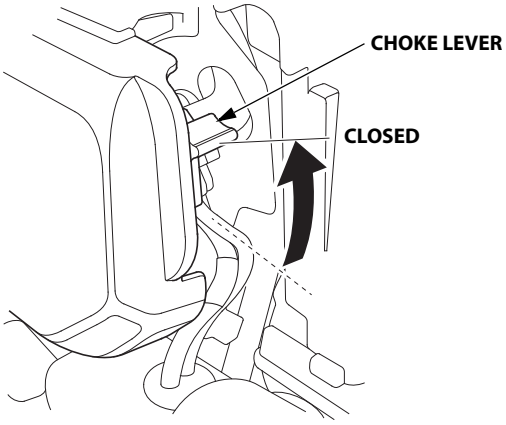

2. Move the throttle lever away from the SLOW position, about 1/3 of the way toward the FAST position.

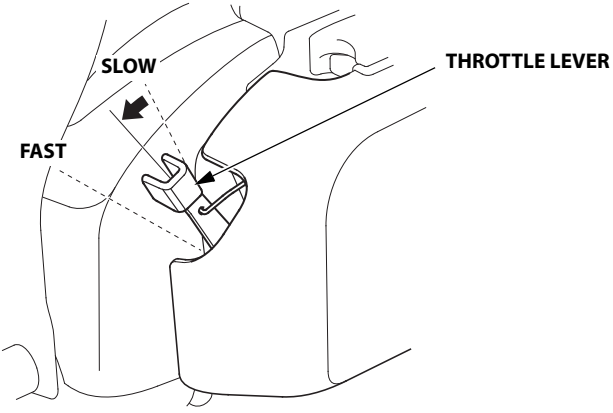

3. Press the priming pump several times until the priming pump is filled with fuel.
   Even if the priming pump is pressed too many times, the extra fuel will return to the fuel tank.
   If the priming pump is not pressed enough, the engine may not start.

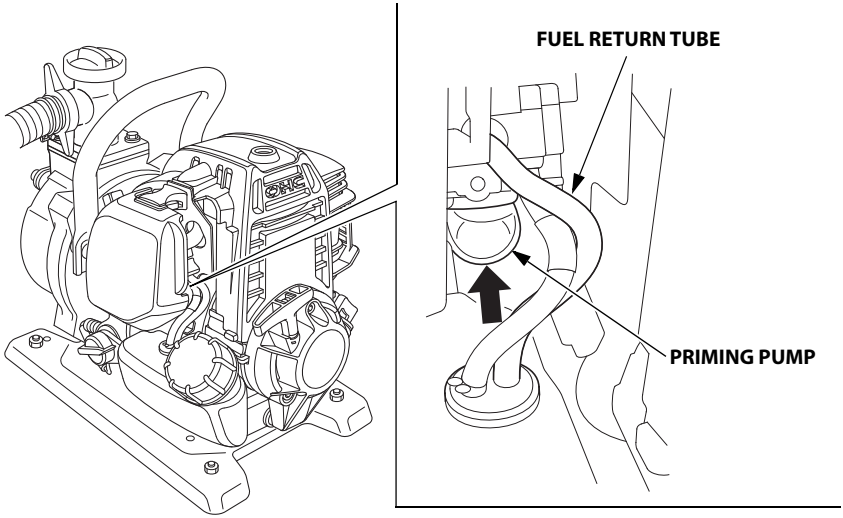

4. Turn the ignition switch to the ON position.

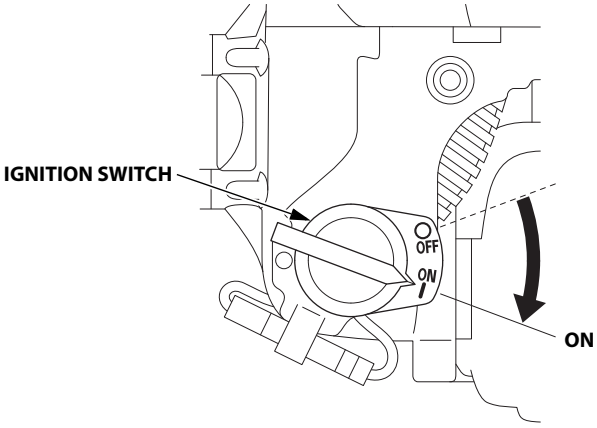

5. Hold the carrying handle securely and pull the starter grip lightly until you feel resistance, then pull briskly in the direction of the arrow as shown below. Do not allow the recoil starter grip to snap back against the engine. Return it gently to prevent damage to the starter.

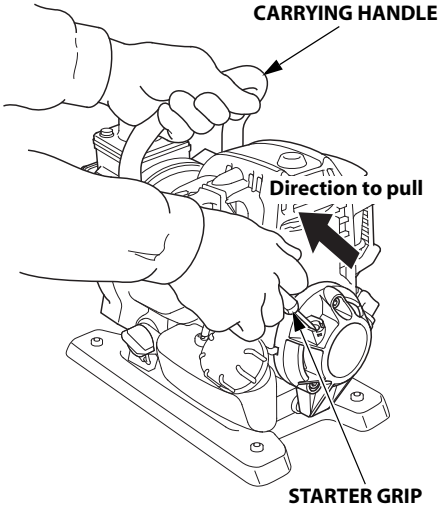

6. If the choke lever was moved to the CLOSED position to start the engine, gradually move it to the OPEN position as the engine warms up.

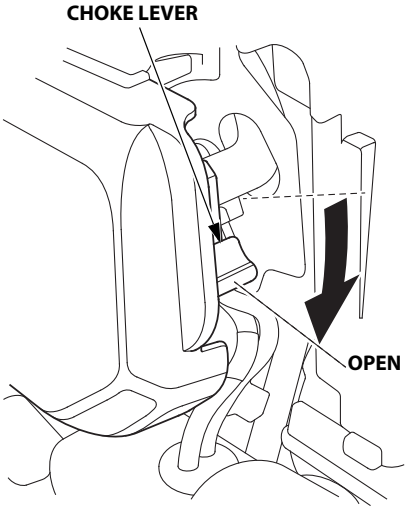

SETTING ENGINE SPEED

After starting the engine, move the throttle lever to the FAST position for self-priming, and check pump output.

Pump output is controlled by adjusting engine speed. Moving the throttle lever in the FAST direction will increase pump output, and moving the throttle lever in the SLOW direction will decrease pump output.

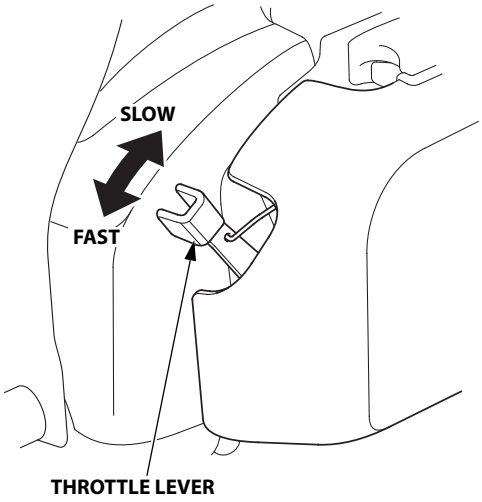

STOPPING THE ENGINE

To stop the engine in an emergency, simply turn the ignition switch to the OFF position. Under normal conditions, use the following procedure.

1. Move the throttle lever to the SLOW position.

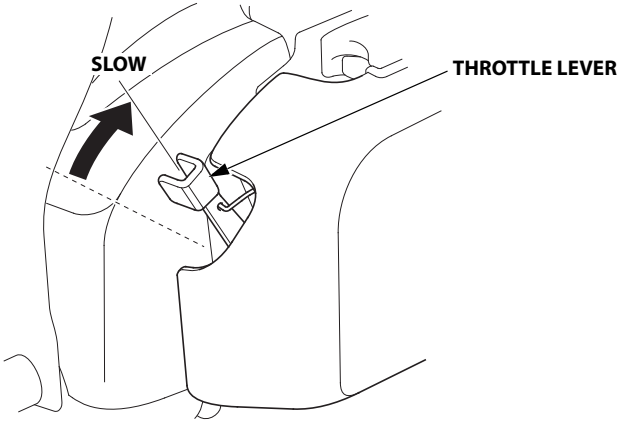

2. Turn the ignition switch to the OFF position.

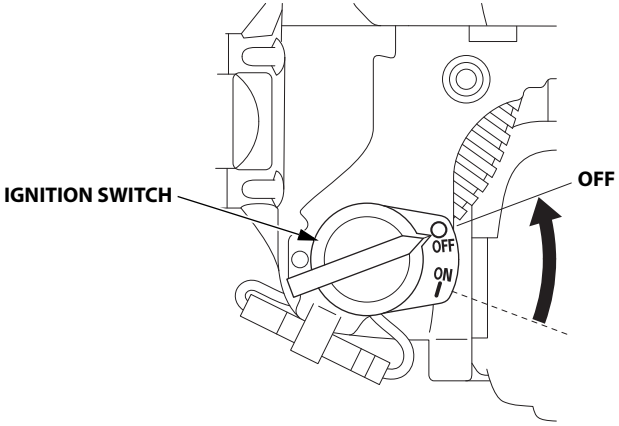

After use, remove the pump drain plug (see page 47), and drain the pump chamber. Remove the filler cap, and flush the pump chamber with clean, fresh water. Allow the water to drain from the pump chamber, and then reinstall the filler cap and drain plug.

SERVICING YOUR PUMP

THE IMPORTANCE OF MAINTENANCE

Good maintenance is essential for safe, economical, and trouble-free operation. It will also help reduce air pollution.

⚠ WARNING

Failure to properly maintain this pump, or failing to correct a problem before operation, could result in a significant malfunction.

Some malfunctions can cause serious injuries or death.

Always follow the inspection and maintenance recommendations and schedules in this owner's manual.

To help you properly care for your pump, the following pages include a maintenance schedule, routine inspection procedures, and simple maintenance procedures using basic hand tools. Other service tasks that are more difficult, or require special tools, are best handled by professionals and are normally performed by a Honda technician or other qualified mechanic.

The maintenance schedule applies to normal operating conditions. If you operate your pump under severe conditions, such as sustained high-load or high-temperature operation, or use in unusually wet or dusty conditions, consult your servicing dealer for recommendations applicable to your individual needs and use.

Remember that an authorized Honda servicing dealer knows your pump best and is fully equipped to maintain and repair it.

To ensure the best quality and reliability, use only new, Honda Genuine parts or their equivalents for repair and replacement.

Maintenance, replacement, or repair of emission control devices and systems may be performed by any engine repair establishment or individual, using parts that are ''certified'' to EPA standards.

MAINTENANCE SAFETY

Some of the most important safety precautions follow. However, we cannot warn you of every conceivable hazard that can arise in performing maintenance. Only you can decide whether or not you should perform a given task.

⚠ WARNING

Improper maintenance can cause an unsafe condition.

Failure to properly follow maintenance instructions and precautions can cause serious injuries or death.

Always follow the procedures and precautions in this owner's manual.

Safety Precautions

- Make sure the engine is off before you begin any maintenance or repairs. This will eliminate several potential hazards:
  - **Carbon monoxide poisoning from engine exhaust.**
    Be sure there is adequate ventilation whenever you operate the engine.
  - **Burns from hot parts.**
    Let the engine and exhaust system cool before touching.
  - **Injury from moving parts.**
    Do not run the engine unless instructed to do so.
- Read the instructions before you begin, and make sure you have the tools and skills required.
- To reduce the possibility of fire or explosion, be careful when working around gasoline. Use only a nonflammable solvent, not gasoline, to clean parts. Keep cigarettes, sparks, and flames away from all fuel-related parts.

MAINTENANCE SCHEDULE

REGULAR SERVICE PERIOD (3) / ITEM — Perform at every indicated month or operating hour interval, whichever comes first.		Each use	First month or 10 hrs.	Every 3 months or 25 hrs.	Every 6 months or 50 hrs.	Every year or 100 hrs.	Every 2 years or 300 hrs.	Refer to page
Engine oil	Check level	o						31
	Change		o		o			32
Air cleaner	Check	o						35
	Clean			o (1)				36
Nuts, bolts, fasteners	Check (Retighten if necessary)	o						—
Spark plug	Check-adjust					o		37
	Replace						o	
Engine cooling fins	Clean				o			40
Spark arrester	Clean					o		44
Fuel tank	Clean					o		41
Fuel filter	Clean					o		41
Idle speed	Check-adjust					o (2)		—
Valve clearance	Check-adjust					o (2)		—
Combustion chamber	Clean	After every 300 hrs. (2)						—
Fuel tube	Check	Every 2 years (Replace if necessary) (2)						43
Oil tube	Check	Every 2 years (Replace if necessary) (2)						—
Impeller	Check					o (2)		—
Impeller clearance	Check					o (2)		—
Pump inlet valve	Check					o (2)		—

(1) Service more frequently when used in dusty areas.

(2) These items should be serviced by your servicing dealer, unless you have the proper tools and are mechanically proficient. Refer to the Honda shop manual for service procedures. See "Honda Publications" on page 63 for ordering information.

(3) For commercial use, log hours of operation to determine proper maintenance intervals.

Failure to follow this maintenance schedule could result in non-warrantable failures.

REFUELING

Check the fuel level by looking through the translucent fuel tank. If the fuel level is low, refuel in a well-ventilated area with the engine stopped. If the engine has been running, allow it to cool first. Never refuel the engine inside a building where gasoline fumes can reach flames or sparks.

⚠ WARNING

Gasoline is highly flammable and explosive.

You can be burned or seriously injured when handling fuel.

- Stop the engine and let it cool before handling fuel.
- Keep heat, sparks, and flame away.
- Handle fuel only outdoors.
- Keep away from your vehicle.
- Wipe up spills immediately.

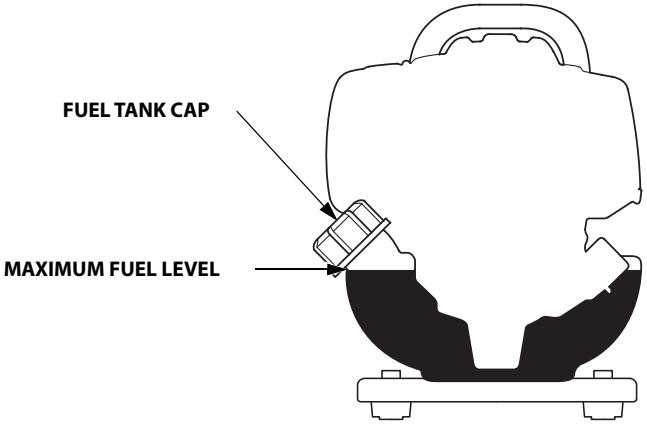

To refuel, rest the engine on the ground with the fuel tank cap facing up, as shown. Remove the fuel tank cap, and fill the tank with gasoline to the maximum fuel level. Refuel carefully to avoid spilling fuel. Do not overfill. There should no fuel in the filler neck. After refueling, tighten the fuel tank cap securely.

Spilled fuel is not only a fire hazard, it causes environmental damage. Wipe up spills immediately.

NOTICE

Fuel can damage paint and plastic. Be careful not to spill fuel when filling your fuel tank. Damage caused by spilled fuel is not covered under the Distributor's Limited Warranty (U.S.) / Distributor's Warranty (CA.).

FUEL RECOMMENDATIONS

This engine is certified to operate on regular unleaded gasoline with a pump octane rating of 86 or higher.

Never use gasoline that is stale, contaminated, or mixed with oil. Avoid getting dirt or water in the fuel tank.

You may use regular unleaded gasoline containing no more than 10% ethanol (E10) or 5% methanol by volume. In addition, methanol must contain cosolvents and corrosion inhibitors.

Use of fuels with content of ethanol or methanol greater than shown above may cause starting and/or performance problems. It may also damage metal, rubber, and plastic parts of the fuel system.

Engine damage or performance problems that result from using a fuel with percentages of ethanol or methanol greater than shown above are not covered under *the Distributor's Limited Warranty (U.S.) / Distributor's Warranty (CA.)*.

If your equipment will be used on an infrequent or intermittent basis, please refer to the fuel section of the *STORAGE* chapter (see page 48) for additional information regarding fuel deterioration.

ENGINE OIL LEVEL CHECK

Check the engine oil level before each use, or every 10 hours if operated continuously.

Check the engine oil level with the engine stopped and in a level position.

1. Remove the oil filler cap.
2. Check the oil level. If it is below the upper limit, fill with the recommended oil (see page 34) to the upper limit.

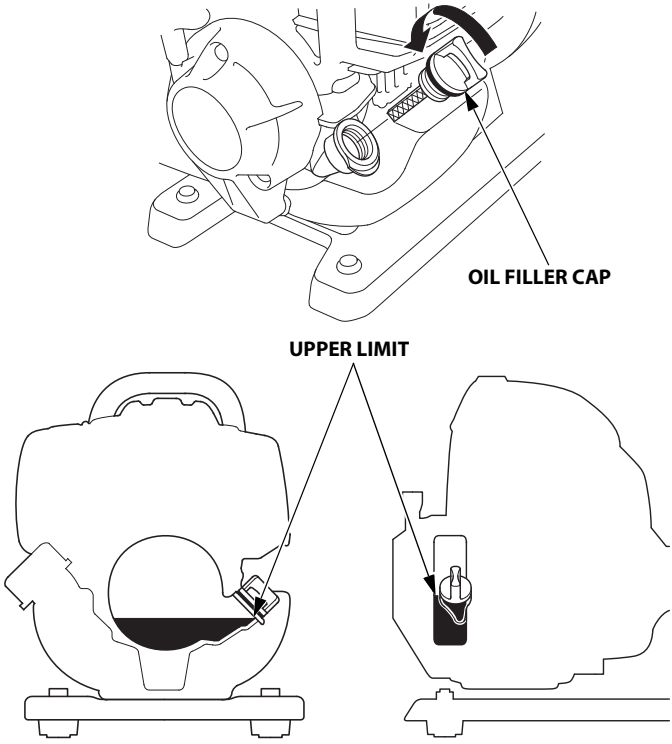

3. Reinstall the oil filler cap securely.

NOTICE

Running the engine with a low or excessive oil level can cause engine damage. This type of damage is not covered under the Distributor's Limited Warranty (U.S.) / Distributor's Warranty (CA.).

ENGINE OIL CHANGE

Drain the used oil while the engine is warm. Warm oil drains quickly and completely.

1. Check that the fuel tank cap is tightened securely.

2. Place a suitable container next to the engine to catch the used oil.

3. Remove the oil filler cap and drain the oil into the container by tipping the engine toward the oil filler neck.

   Please dispose of used motor oil in a manner that is compatible with the environment. We suggest you take used oil in a sealed container to your local recycling center or service station for reclamation. Do not throw it in the trash, pour it on the ground, or pour it down a drain.

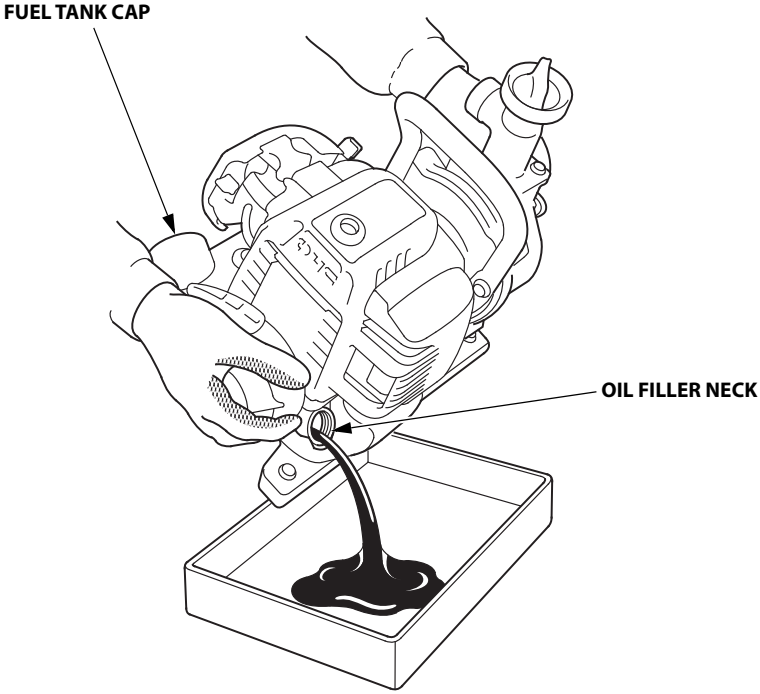

4. With the engine in a level position, fill to the upper limit with the recommended oil (see page 34).

   Engine oil capacity : 2 oz (0.08 L)

   Some oil will remain in the engine after draining. When refilling with fresh oil. Slowly add enough oil to fill to the upper limit as shown below.

NOTICE

Running the engine with a low or excessive oil level can cause engine damage. This type of damage is not covered under the Distributor's Limited Warranty (U.S.) / Distributor's Warranty (CA.).

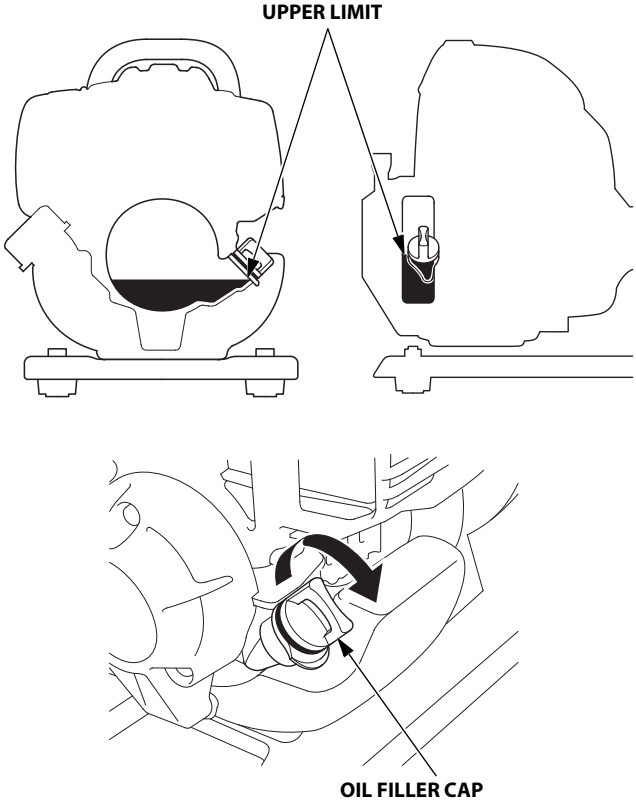

5. Reinstall the oil filler cap securely.
   If any oil is spilled, be sure to wipe it.

   Wash your hands with soap and water after handling used oil.

ENGINE OIL RECOMMENDATIONS

Oil is a major factor affecting performance and service life. Use 4-stroke automotive detergent oil.

Use 4-stroke motor oil that meets or exceeds the requirements for API service category SJ or later (or equivalent). Always check the API service label on the oil container to be sure it includes the letters SJ or later (or equivalent).

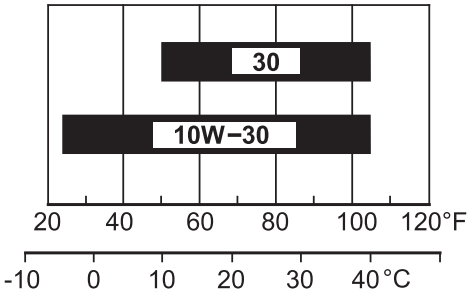

AMBIENT TEMPERATURE

SAE 10W-30 is recommended for general use. Other viscosities shown in the chart may be used when the average temperature in your area is within the indicated range.

AIR CLEANER SERVICE

Move the choke lever to the CLOSED (upwards) position (see page 9).

Press the latch tab on the top of the air cleaner cover. Tilt the top of the air cleaner cover back and unhook the two lower tabs, and remove the cover. Check the air filter to be sure it is clean and in good condition.

If the air filter is dirty, clean it as described on page 36. Replace the air filter if it is damaged.

Reinstall the air filter and air cleaner cover.

NOTICE

Operating the engine without an air filter, or with a damaged air filter, will allow dirt to enter the engine, causing rapid engine wear. This type of damage is not covered under the Distributor's Limited Warranty (U.S.) / Distributor's Warranty (CA.).

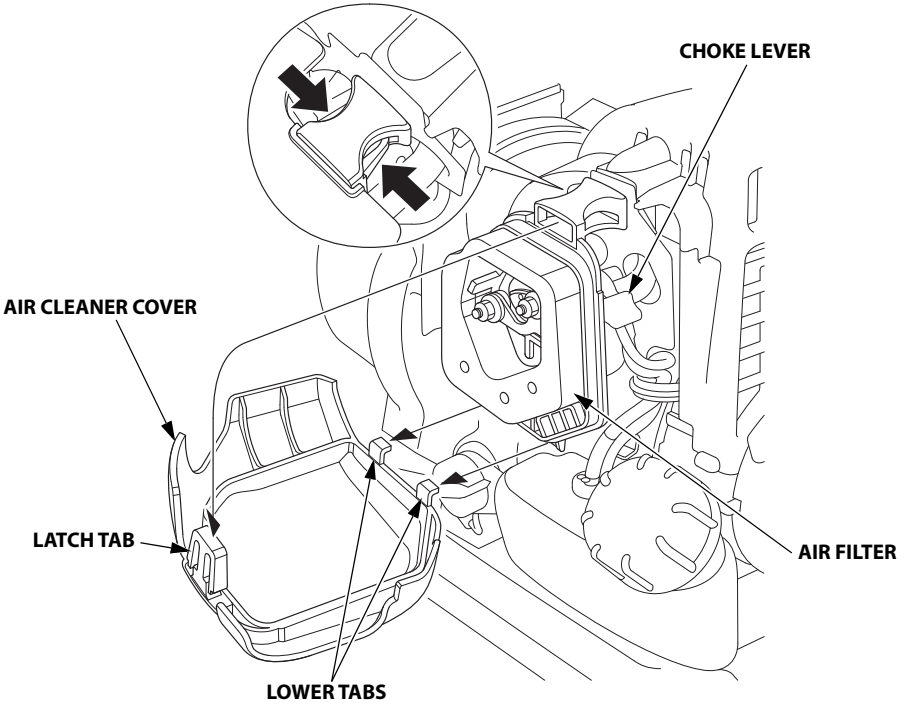

AIR FILTER CLEANING

A dirty air filter will restrict air flow to the carburetor, reducing engine performance. If you operate the pump in very dusty areas, clean the air filter more frequently than specified in the *Maintenance Schedule* (see page 28).

1. Clean the air filter in warm soapy water, rinse, and allow to dry thoroughly. Or clean in nonflammable solvent and allow to dry.

2. Dip the air filter in clean engine oil, and then squeeze out all excess oil. The engine will smoke when started if too much oil is left in the foam.

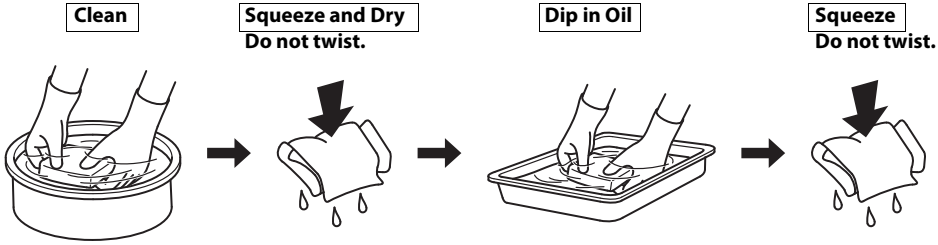

3. Wipe dirt from the air cleaner base and cover, using a moist rag. Be careful to prevent dirt from entering the air duct that leads to the carburetor.

SPARK PLUG SERVICE

Recommended spark plug: CMR5H (NGK)

NOTICE

Incorrect spark plugs can cause engine damage.

1. Loosen the 5 mm hex bolt with a hexagon wrench, and then remove the top cover.

⚠ WARNING

- You may be injured from rotating parts or burned by the muffler.
- Do not operate the engine when the top cover is removed.
- Do not pull the recoil starter grip when the top cover is removed.

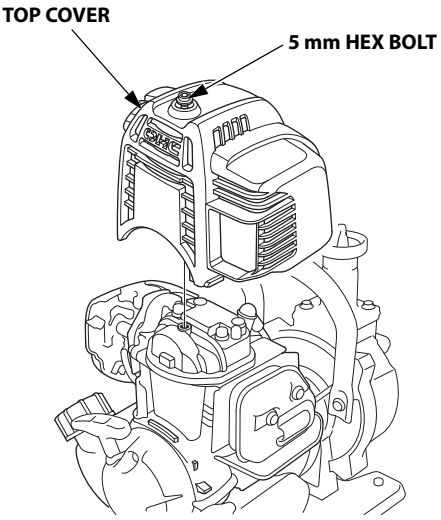

2. First remove any dirt from around the spark plug area, and then disconnect the spark plug cap.

3. Remove the spark plug with a spark plug wrench.

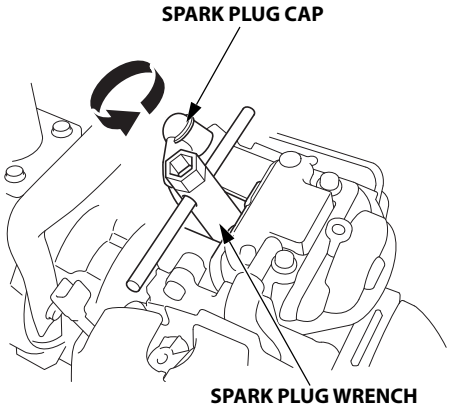

4. Inspect the spark plug. Replace it if the electrodes are worn, or if the insulator is cracked or chipped.

5. Measure the spark plug electrode gap with a wire-type feeler gauge. Correct the gap, if necessary, by carefully bending the side electrode.

   The gap should be:
   0.024–0.028 in (0.6–0.7 mm)

6. Install the spark plug carefully, by hand, to avoid cross-threading.

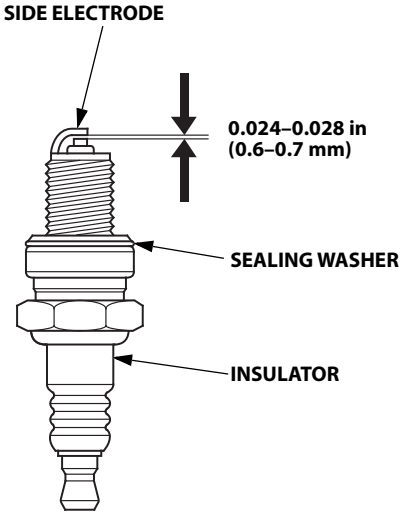

7. After the spark plug seats, tighten with a spark plug wrench to compress the washer.

   If reinstalling the used spark plug, tighten 1/8–1/4 turn after the spark plug seats.
   If installing a new spark plug, tighten 1/2 turn after the spark plug seats.

   TORQUE: 11.8 N·m (1.2 kgf·m, 9 lbf·ft)

   NOTICE

   A loose spark plug can overheat and damage the engine. Overtightening the spark plug can damage the threads in the cylinder head.

8. Attach the spark plug cap.

9. Install the top cover, and tighten the 5 mm hex bolt securely with a hexagon wrench.

COOLING FIN INSPECTION

1. Remove the top cover (see page 37).

2. Inspect the engine cooling fins, and clean out debris if they are clogged.

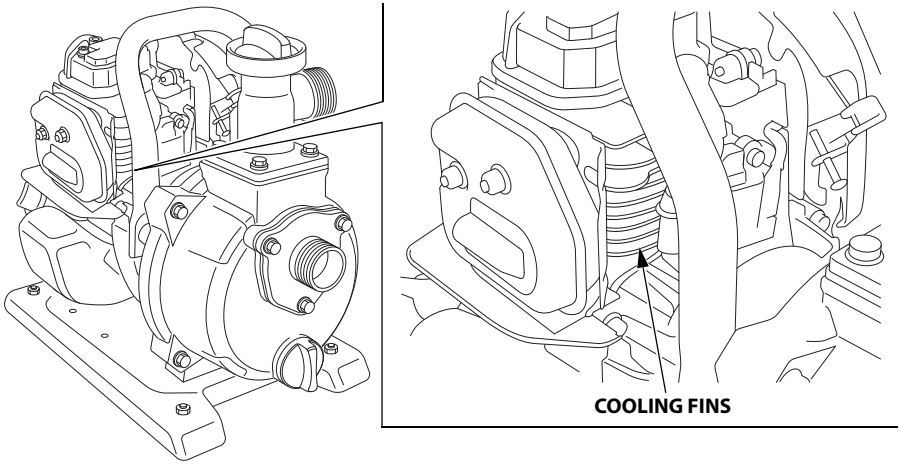

3. Install the top cover, and tighten the 5 mm hex bolt securely with a hexagon wrench.

FUEL FILTER INSPECTION and FUEL TANK CLEANING

1. Check that the oil filler cap is tightened securely.

2. Remove the fuel tank cap, and drain the fuel into an approved gasoline container by tipping the engine toward the fuel filler neck.

⚠ WARNING

Gasoline is highly flammable and explosive.

You can be burned or seriously injured when handling fuel.

- Stop the engine and let it cool before handling fuel.
- Keep heat, sparks, and flame away.
- Handle fuel only outdoors.
- Keep away from your vehicle.
- Wipe up spills immediately.

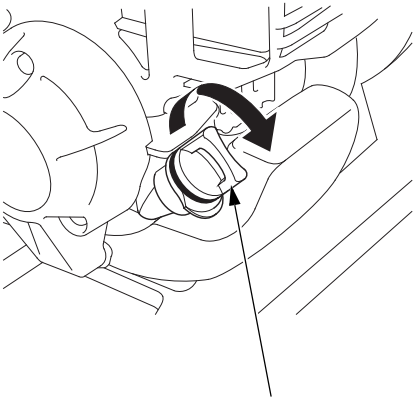

OIL FILLER CAP

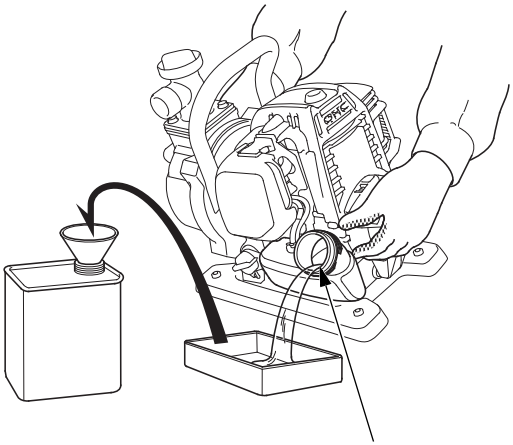

FUEL FILLER NECK

3. Pull the fuel filter out through the fuel filler neck by hooking the black fuel tube with a piece of wire, such as a partly straightened paper clip.

4. Inspect the fuel filter. If the fuel filter is dirty, wash it gently with nonflammable or high flashpoint solvent. If the fuel filter is excessively dirty, replace it.

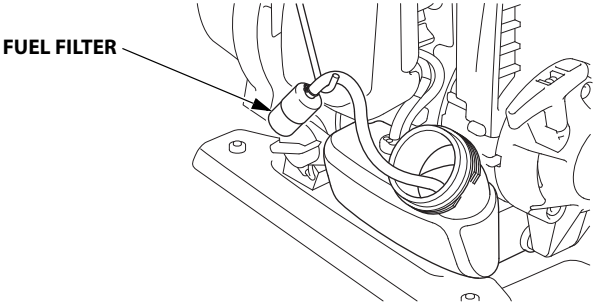

5. Rinse sediment from the fuel tank, using nonflammable or high flashpoint solvent.

6. Insert the fuel filter into the fuel tank and tighten the fuel tank cap securely.

FUEL TUBE INSPECTION

Check fuel tubes for cracks and any other deterioration and confirm that there is no leakage of fuel on the fuel tubes. If you notice any abnormal symptoms on the fuel tubes, contact your servicing dealer.

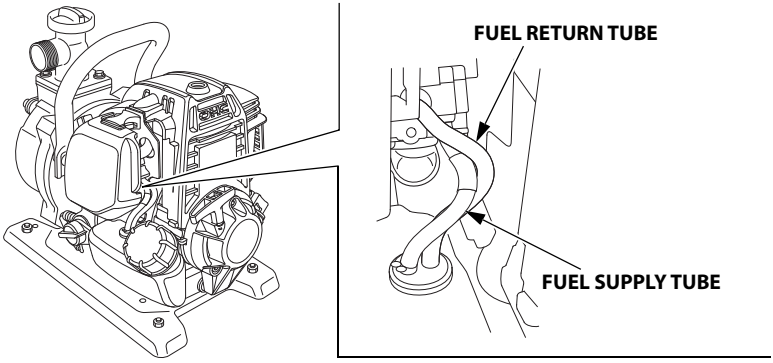

SPARK ARRESTER SERVICE

The spark arrester must be serviced every 100 hours to keep it functioning as designed.

If the engine has been running, the muffler will be very hot. Allow the muffler to cool before servicing the spark arrester.

1. Remove the top cover (see page 37).

2. Remove the two 4 mm screws from the spark arrester, and remove the spark arrester from the muffler.

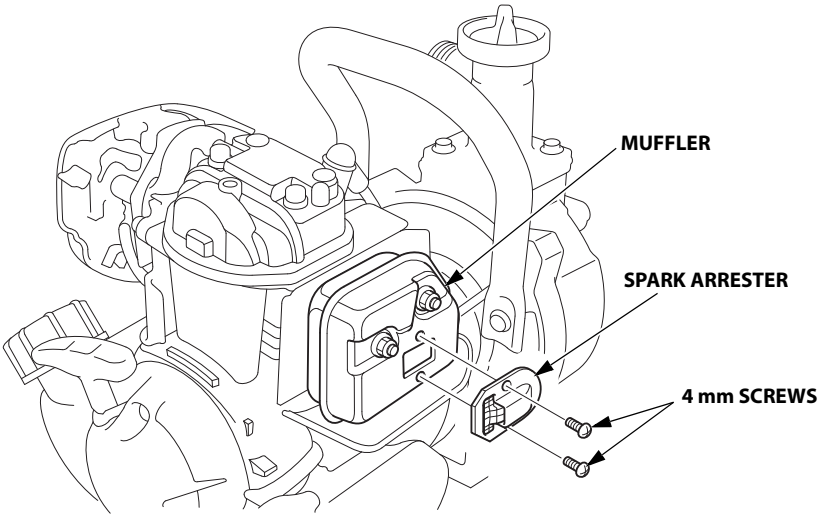

3. Use a brush to remove carbon deposits from the spark arrester screen. Be careful to avoid damaging the screen.

   The spark arrester must be free of breaks and holes. Replace the spark arrester if it is damaged.

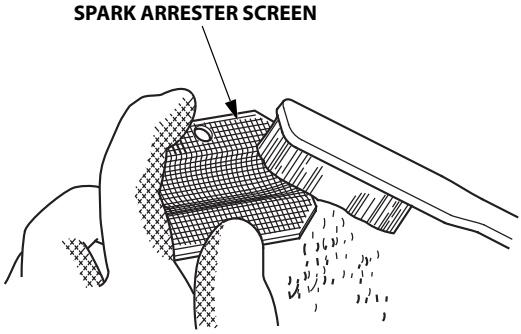

4. Install the spark arrester in the reverse order of disassembly.

   When you attach the spark arrester, spark arrester's outlet must be pointed toward the side opposite the spark plug.

5. Install the top cover, and tighten the 5 mm hex bolt securely with a hexagon wrench.

STORAGE

STORAGE PREPARATION

Proper storage preparation is essential for keeping your pump trouble-free and looking good. The following steps will help to keep rust and corrosion from impairing your pump's function and appearance, and will make the engine easier to start when you use the pump again.

Cleaning

1. Wash the engine and pump.

   Wash the engine by hand, and be careful to prevent water from entering the air cleaner or muffler opening. Keep water away from controls and all other places that are difficult to dry, as water promotes rust.

   NOTICE

   - *Using a garden hose or pressure washing equipment can force water into the air cleaner or muffler opening. Water in the air cleaner will soak the air filter, and water that passes through the air filter or muffler can enter the cylinder, causing damage.*
   - *Water contacting a hot engine can cause damage. If the engine has been running, allow it to cool for at least half an hour before washing.*

2. Wipe dry all accessible surfaces.

3. Fill the pump chamber with clean, fresh water, start the engine outdoors, and let it run until it reaches normal operating temperature to evaporate any external water.

   NOTICE

   Dry operation will damage the pump seal. Be sure the pump chamber is filled with water before starting the engine.

4. Stop the engine, and allow it to cool.
5. Remove the pump drain plug, and flush the pump with clean, fresh water. Allow the water to drain from the pump chamber, and then reinstall the drain plug.
6. After the pump is clean and dry, touch up any damaged paint, and coat areas that may rust with a light film of oil. Lubricate controls with a silicone spray lubricant.

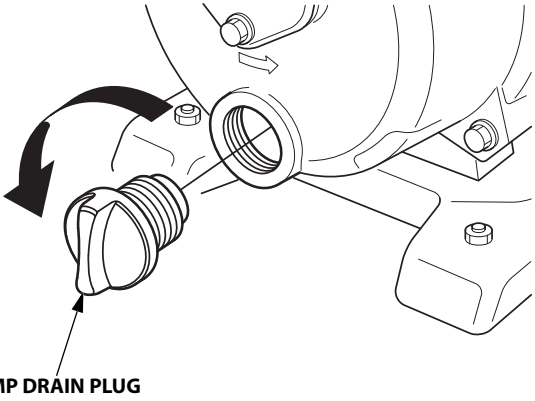

STORAGE

Fuel

NOTICE

Depending on the region where you operate your equipment, fuel formulations may deteriorate and oxidize rapidly. Fuel deterioration and oxidation can occur in as little as 30 days and may cause damage to the carburetor and/or fuel system. Please check with your servicing dealer for local storage requirements.

Gasoline will oxidize and deteriorate in storage. Old gasoline will cause hard starting, and it leaves gum deposits that clog the fuel system. If the gasoline in your engine deteriorates during storage, you may need to have the carburetor and other fuel system components serviced or replaced.

The length of time that gasoline can be left in your fuel tank and carburetor without causing functional problems will vary with such factors as gasoline blend, your storage temperatures, and whether the fuel tank is partially or completely filled. The air in a partially filled fuel tank promotes fuel deterioration. Very warm storage/temperatures accelerate fuel deterioration. Fuel deterioration problems may occur within a few months, or even less if the gasoline was not fresh when you filled the fuel tank.

The *Distributor's Limited Warranty (U.S.) / Distributor's Warranty (CA.)* does not cover fuel system damage or engine performance problems resulting from neglected storage preparation.

You can extend fuel storage life by adding a fuel stabilizer that is formulated for that purpose, or you can avoid fuel deterioration problems by draining the fuel tank and carburetor.

Adding a Fuel Stabilizer to Extend Fuel Storage Life

Short Term Storage (30-90 days)

If your equipment will not be used for 30-90 days, we recommend the following to prevent fuel-related problems.

1. Add fuel stabilizer following the manufacturer's instructions.

   When adding a fuel stabilizer, fill the fuel tank with fresh gasoline. If only partially filled, air in the tank will promote fuel deterioration during storage. If you keep a container of gasoline for refueling, be sure that it contains only fresh gasoline.

2. After adding a fuel stabilizer, run the engine outdoors for 10 minutes to be sure that treated gasoline has replaced the untreated gasoline in the carburetor.

   NOTICE

   Dry operation will damage the pump seal. Be sure the pump chamber is filled with water before starting the engine.

3. Stop the engine.

4. Remove the pump drain plug, and allow the water to drain from the pump chamber. Reinstall the drain plug.

Draining the Fuel Tank and Carburetor

Long Term or Seasonal Storage (greater than 90 days)

1. Check that the oil filler cap is tightened securely.
2. Remove the fuel tank cap and drain the fuel into an approved gasoline container by tipping the engine toward the fuel filler neck.
3. Press the priming pump several times until all fuel has returned to the fuel tank.
4. Tip the engine toward the fuel filler neck again to drain the fuel.

⚠ WARNING

Gasoline is highly flammable and explosive.

You can be burned or seriously injured when handling fuel.

- Stop the engine and let it cool before handling fuel.
- Keep heat, sparks, and flame away.
- Handle fuel only outdoors.
- Keep away from your vehicle.
- Wipe up spills immediately.

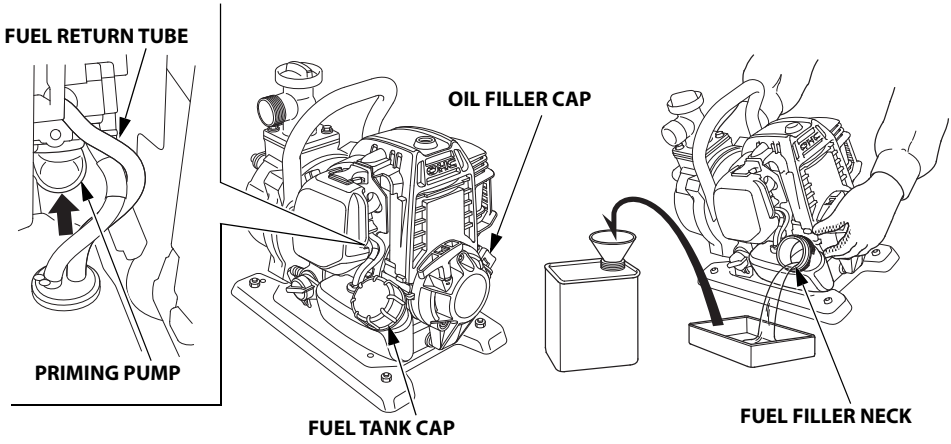

5. After all fuel has drained, reinstall the fuel tank cap securely.

Engine Oil

Change the engine oil (see page 32).

Engine Cylinder

1. Remove the top cover (see page 37).
2. Remove the spark plug (see page 38).
3. Apply a couple of drops of clean engine oil into the cylinder.
4. Install the top cover temporarily.
5. Pull the starter grip several times to distribute the oil in the cylinder.
6. Remove the top cover, and then reinstall the spark plug.
7. Install the top cover, and tighten the 5 mm hex bolt securely with a hexagon wrench.
8. Move the choke lever to the CLOSED (upwards) position (see page 9).
9. Pull the starter grip slowly until resistance is felt. This will close the valves, so moisture cannot enter the engine cylinder. Return the starter grip gently.

STORAGE

STORAGE PRECAUTIONS

If your pump will be stored with gasoline in the fuel tank and carburetor, it is important to reduce the hazard of gasoline vapor ignition. Select a well-ventilated storage area away from any appliance that operates with a flame, such as a furnace, water heater, or clothes dryer. Also avoid any area with a spark-producing electric motor or where power tools are operated.

If possible, avoid storage areas with high humidity, because that promotes rust and corrosion.

Place the pump on a level surface. Tilting can cause fuel or oil leakage.

With the engine and exhaust system cool, cover the pump to keep out dust. A hot engine and exhaust system can ignite or melt some materials. Do not use a plastic sheet as a dust cover. A nonporous cover will trap moisture around the pump, promoting rust and corrosion.

REMOVAL FROM STORAGE

Check your pump as described in the *BEFORE OPERATION* chapter of this manual.

If the fuel was drained during storage preparation, fill the tank with fresh gasoline. If you keep a container of gasoline for refueling, be sure that it contains only fresh gasoline. Gasoline oxidizes and deteriorates over time, causing hard starting.

If the cylinder was coated with oil during storage preparation, the engine may smoke briefly at startup. This is normal.

TRANSPORTING

If the pump has been running, allow the engine to cool for at least 15 minutes before loading the pump on the transport vehicle. A hot engine and exhaust system can burn you and can ignite some materials.

Keep the pump level when transporting to reduce the possibility of fuel leakage.

TAKING CARE OF UNEXPECTED PROBLEMS

ENGINE

Engine Will Not Start

Possible Cause	Correction
Choke open.	Move choke lever to CLOSED position unless engine is warm.
Ignition switch OFF.	Turn ignition switch to the ON position.
Out of fuel.	Refuel (see page 29).
Bad fuel; pump stored without treating or draining gasoline, or refueled with bad gasoline.	Drain fuel tank and carburetor (see page 50). Refuel with fresh gasoline (see page 29).
Spark plug faulty, fouled, or improperly gapped.	Gap or replace spark plug (see page 38).
Spark plug wet with fuel (flooded engine).	Dry and reinstall spark plug. Start engine with throttle lever in FAST position, with choke lever in OPEN position.
Fuel filter clogged, carburetor malfunction, ignition malfunction, valves stuck, etc.	Take the pump to your servicing dealer, or refer to shop manual.

Engine Lacks Power

Possible Cause	Correction
Throttle lever not in the FAST position.	Move the throttle lever to the FAST position (see page 24).
Air filter element clogged.	Clean or replace air filter element (see page 36).
Bad fuel; pump stored without treating or draining gasoline, or refueled with bad gasoline.	Drain fuel tank and carburetor (see page 50). Refuel with fresh gasoline (see page 29).
Fuel filter clogged, carburetor malfunction, ignition malfunction, valves stuck, etc.	Take the pump to your servicing dealer, or refer to shop manual.

PUMP

No Pump Output

Possible Cause	Correction
Throttle lever not in the FAST position.	Move the throttle lever to the FAST position (see page 24).
Pump not primed.	Prime pump (see page 19).
Suction hose collapsed, cut, or punctured.	Replace suction hose (see page 16).
Strainer not completely underwater.	Sink the strainer and the end of the suction hose completely underwater.
Air leak at connector.	Replace hose coupling packing if missing or damaged. Tighten hose connector and clamp (see pages 16 and 17).
Strainer clogged.	Clean debris from strainer.
Excessive head.	Relocate pump and/or hoses to reduce head (see page 15).
Engine lacks power.	See page 54.

Low Pump Output

Possible Cause	Correction
Throttle lever not in the FAST position.	Move the throttle lever to the FAST position (see page 24).
Suction hose collapsed, damaged, too long, or diameter too small.	Replace suction hose (see page 16).
Air leak at connector.	Replace hose coupling packing if missing or damaged. Tighten hose connector and clamp (see pages 16 and 17).
Strainer clogged.	Clean debris from strainer.
Discharge hose damaged, too long, or diameter too small.	Replace discharge hose (see page 17).
Excessive head.	Relocate pump and/or hoses to reduce head (see page 15).
Engine lacks power.	See page 54.

TECHNICAL INFORMATION

Serial Number Locations

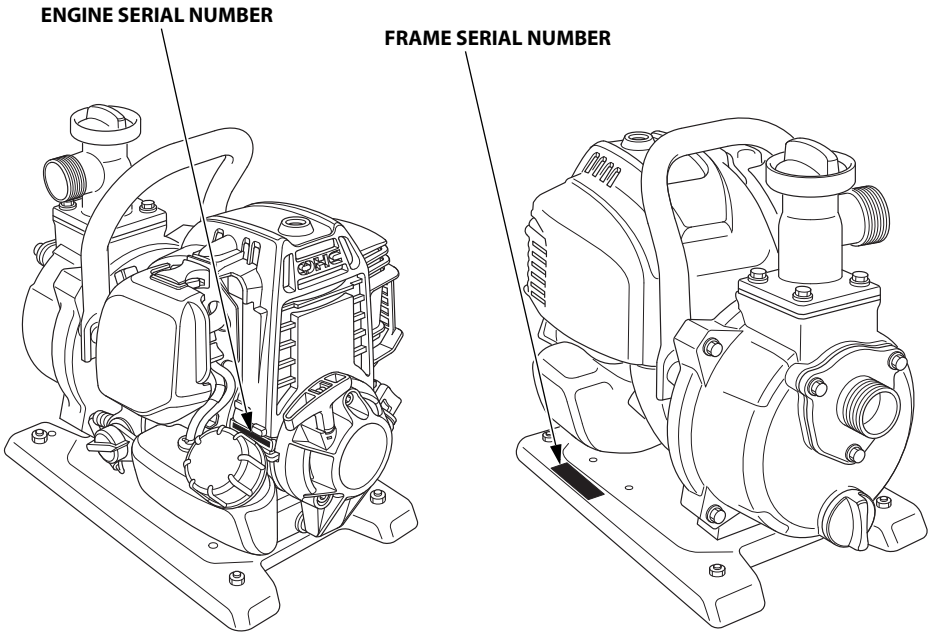

Record the frame serial number and the engine serial number in the space below. You will need these serial numbers when ordering parts, and when making technical or warranty inquiries (see page 64).

Engine serial number: _____

Frame serial number: _____

Date of purchased: _____

Carburetor Modification for High Altitude Operation

At high altitude, the standard carburetor air-fuel mixture will be too rich. Performance will decrease, and fuel consumption will increase. A very rich mixture will also foul the spark plug and cause hard starting. Operation at an altitude that differs from that at which this engine was certified, for extended periods of time, may increase emissions.

High altitude performance can be improved by specific modifications to the carburetor. If you always operate your pump at altitudes above 2,000 feet (610 meters), have your servicing dealer perform this carburetor modification. This engine, when operated at high altitude with the carburetor modifications for high altitude use, will meet each emission standard throughout its useful life.

Even with carburetor modification, engine horsepower will decrease about 3.5% for each 1,000-foot (300-meter) increase in altitude. The effect of altitude on horsepower will be greater than this if no carburetor modification is made.

NOTICE

When the carburetor has been modified for high altitude operation, the air-fuel mixture will be too lean for low altitude use. Operation at altitudes below 2,000 feet (610 meters) with a modified carburetor may cause the engine to overheat and result in serious engine damage. For use at low altitudes, have your servicing dealer return the carburetor to original factory specifications.

EMISSION CONTROL SYSTEM INFORMATION

Source of Emissions

The combustion process produces carbon monoxide, oxides of nitrogen, and hydrocarbons. Control of hydrocarbons and oxides of nitrogen is very important because, under certain conditions, they react to form photochemical smog when subjected to sunlight. Carbon monoxide does not react in the same way, but it is toxic.

Honda utilizes appropriate air/fuel ratios and other emissions control systems to reduce the emissions of carbon monoxide, oxides of nitrogen, and hydrocarbons.
Additionally, Honda fuel systems utilize components and control technologies to reduce evaporative emissions.

The U.S. and California Clean Air Acts, and Environment and Climate Change Canada (ECCC)

U.S. EPA, California and Canadian regulations require all manufacturers to furnish written instructions describing the operation and maintenance of emission control systems.

The following instructions and procedures must be followed in order to keep the emissions from your Honda engine within the emission standards.

Tampering and Altering

NOTICE

Tampering is a violation of federal and California law.

Tampering with or altering the emission control system may increase emissions beyond the legal limit. Among those acts that constitute tampering are:

- Removal or alteration of any part of intake, fuel, or exhaust systems.
- Alterations that would cause the engine to operate outside its design parameters.

Problems That May Affect Emissions

If you are aware of any of the following symptoms, have your engine inspected and repaired by your authorized Honda Power Equipment dealer.

- Hard starting or stalling after starting.
- Rough idle.
- Misfiring or backfiring under load.
- Afterburning (backfiring).
- Black exhaust smoke or high fuel consumption.

Replacement Parts

The emissions control systems on your new Honda engine were designed, built, and certified to conform with EPA, California (models certified for sale in California only), and Canadian emissions regulations. We recommend the use of Honda Genuine parts whenever you have maintenance done. These original design replacement parts are manufactured to the same standards as the original parts, so you can be confident of their performance.

Honda cannot deny coverage under the emission warranty solely for the use of non-Honda replacement parts or service performed at a location other than an authorized Honda dealership; you may use comparable parts certified by the EPA, CARB or ECCC, as applicable, and have service performed at non-Honda locations. However, the use of replacement parts that are not of the original design and quality may impair the effectiveness of your emissions control system.

A manufacturer of an aftermarket part assumes the responsibility that the part will not adversely affect emissions performance. The manufacturer or rebuilder of the part must certify that use of the part will not result in a failure of the engine to comply with emissions regulations.

Maintenance

As the power equipment engine owner, you are responsible for completing all required maintenance listed in your owner's manual. Honda recommends that you retain all receipts covering maintenance on your power equipment engine, but Honda cannot deny warranty coverage solely for the lack of receipts or for your failure to ensure that all scheduled maintenance has been completed.

Follow the MAINTENANCE SCHEDULE on page 28.

Remember that this schedule is based on the assumption that your Honda engine product will be used for its designed purpose.

Sustained high-load or high-temperature operation, or use in dusty conditions, will require more frequent service.

Air Index
(Models certified for sale in California)

An Air Index Information label is applied to engines certified to an emission durability time period in accordance with the requirements of the California Air Resources Board.

The bar graph is intended to provide you, our customer, the ability to compare the emissions performance of available engines. The lower the Air Index, the less pollution.

The durability description is intended to provide you with information relating to the engine's emission durability period. The descriptive term indicates the useful life period for the engine's emission control system. See your "EMISSION CONTROL SYSTEM WARRANTY" (see page 61) for additional information.

Descriptive Term	Applicable to Emission Durability Period
Moderate	50 hours (0–80 cc, inclusive) 125 hours (greater than 80 cc)
Intermediate	125 hours (0–80 cc, inclusive) 250 hours (greater than 80 cc)
Extended	300 hours (0–80 cc, inclusive) 500 hours (greater than 80 cc) 1,000 hours (225 cc and greater)

EMISSION CONTROL SYSTEM WARRANTY

Your Honda Power Equipment engine is designed, built, and equipped to meet the U.S. EPA, Environment Canada, and California Air Resources Board (models certified for sale in California only) emission standard for spark ignited engines. American Honda Motor provides the emission warranty coverage for engines in the United States and its territories. Honda Canada provides the emission warranty for engines in the 13 provinces and territories of Canada.

Warranty Coverage

Honda Power Equipment engines certified to the U.S. EPA, Environment Canada, and State of California (models certified for sale in California only) emission regulations are covered by this warranty to be free from defects in materials and workmanship that may keep it from meeting the applicable U.S. EPA, CARB and Canadian emissions requirements for a minimum of 2 years or the length of the Honda Power Equipment Distributor's Limited Warranty, whichever is longer, from the original date of delivery to the retail purchaser. This warranty is transferable to each subsequent purchaser for the duration of the warranty period. Warranty repairs will be made without charge for diagnosis, parts, and labor. Information about how to make a warranty claim, as well as a description of how a claim can be made and/or how service can be provided, can be obtained by contacting an authorized Honda Power Equipment dealer or by contacting the following:

Email: powerequipmentemissions@ahm.honda.com
Telephone: (888) 888-3139

The covered components include all components whose failure would increase an engine's emissions of any regulated pollutant or evaporative emissions. A list of specific components can be found in the separately included emissions warranty statement.

Specific warranty terms, coverage, limitations, and manner of seeking warranty service are also set forth in the separately included emissions warranty statement. In addition, the emission warranty statement can also be found on the Honda Power equipment website or at the following link:

http://powerequipment.honda.com/support/warranty

TECHNICAL INFORMATION

Specifications

Dimensions and weight

Model	WX10T	
Description code	WAGT	
Type	A, AN	C, C1, C2
Length	13.4 in (340 mm)	
Width	8.7 in (220 mm)	
Height	11.6 in (295 mm)	
Dry mass [weight]	13.4 lbs (6.1 kg)	

Engine design and performance

Model	GX25T
Engine type	4-stroke, overhead camshaft, single cylinder
Displacement [bore × stroke]	1.53 cu-in (25.0 cm^3) [1.38 × 1.02 in (35.0 × 26.0 mm)]
Engine oil capacity	2 oz (0.08 L)
Fuel tank capacity	0.140 US gal (0.53 L)
Cooling system	Forced air
Ignition system	Transistor magneto
PTO shaft rotation	Counterclockwise

Tune-up Specifications

Spark plug gap	0.024 – 0.028 in (0.6 – 0.7 mm)	Refer to page 38.
Idle speed	4,100 ± 200 rpm	
Valve clearance (cold)	Intake: 0.08 ± 0.02 mm Exhaust: 0.11 ± 0.02 mm	See your servicing dealer.
Other specifications	No other adjustments needed.	

Pump

Suction port diameter	1.0 in (25 mm)
Discharge port diameter	1.0 in (25 mm)
Maximum total head	Minimum 121 ft (37 m)
Maximum suction head	Minimum 26 ft (8 m)
Maximum discharge capacity	Minimum 32 US gal (120 L)/min
Priming time	Maximum 80 seconds at 16.4 ft (5 m)

Specifications are subject to change without notice.

CONSUMER INFORMATION

Dealer Locator Information

To find an authorized Honda Servicing Dealer

For USA:
Visit our website: http://powerequipment.honda.com/dealer-locator

For Canada:
Call 1-888-946-6329 or visit our website:
English
http://powerequipment.honda.ca/dealerlocator
French
http://powerequipment.honda.ca/trouver-concessionaire

Honda Publications

Shop Manual

This manual covers complete maintenance and overhaul procedures. It is intended to be used by a skilled technician.

For USA:
Available through your Honda dealer or visit
http://powerequipment.honda.com/support/shop-manuals

For Canada:
Contact your dealer for information on the Shop Manual.

Parts Catalog

For USA:
This manual provides complete, illustrated parts lists. Available through your Honda dealer.

For Canada:
Contact your dealer for information on parts.

CONSUMER INFORMATION

Customer Service Information

Honda Power Equipment dealership personnel are trained professionals. They should be able to answer any question you may have. If you encounter a problem that your dealer does not solve to your satisfaction, please discuss it with the dealership's management.
The Service Manager or General Manager can help. Almost all problems are solved in this way.

If you are dissatisfied with the decision made by the dealership's management, contact the Honda Power Equipment Customer Relations Office. You can write to:

American Honda Motor Co., Inc.
Power Equipment Division
Customer Relations Office
4900 Marconi Drive
Alpharetta, Georgia 30005-8847
Telephone: (770) 497-6400 M-F, 9:00 am to 7:30 pm ET

In Canada:
Honda Canada, Inc.
Customer Relations Department
180 Honda Boulevard
Markham, Ontario L6C 0H9
Tel: 1-888-946-6329 (Toll free)
Fax: 1-877-939-0909 (Toll free)
E-mail: honda_cr@ch.honda.com

When you write or call, please give us this information:

- Model and serial numbers (see page 56)
- Name of the dealer who sold the Pump to you
- Name and address of the dealer who services your Pump
- Date of purchase
- Your name, address, and telephone number
- A detailed description of the problem

QUICK REFERENCE INFORMATION

Fuel	Type	Regular unleaded gasoline with an ethanol content of no more than 10% and a pump octane rating of 86 or higher (see page 30)
Engine Oil	Type	SAE 10W-30, API SJ or later (or equivalent), for general use (see page 34) Maximum oil capacity : 2 oz (0.08 L)
Spark Plug	Type	NGK: CMR5H
	Gap	0.024–0.028 in (0.6–0.7 mm) (see page 38)
Carburetor	Idle speed	4,100±200 rpm
Maintenance	Before each use	Check engine oil level. Check air cleaner. Check all bolts and nuts.
	First 10 hours	Change engine oil.
	Subsequent	Refer to the maintenance schedule on page 28.

HONDA

WX10T
31YH4606
00X31-YH4-6060

EM3 AH 英
Hi Printed in Thailand