Form No. 3457-290 Rev A

Universal Groomer Drive Kit

Fixed Head Greensmaster® 1018, 1021, or 1026 Mower

Model No. 04707—Serial No. 321000000 and Up

Installation Instructions

Introduction

Read this information carefully to learn how to operate and maintain your product properly and to avoid injury and product damage. You are responsible for operating the product properly and safely.

Visit www.Toro.com for product safety and operation training materials, accessory information, help finding a dealer, or to register your product.

Whenever you need service, genuine Toro parts, or additional information, contact an Authorized Service Dealer or Toro Customer Service and have the model and serial numbers of your product ready. Figure 1 identifies the location of the model and serial numbers on the product. Write the numbers in the space provided.

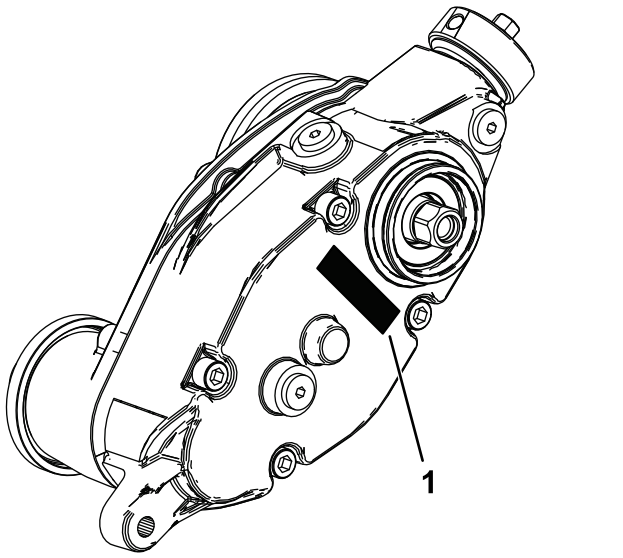

g346921

Figure 1

1. Model and serial number location

Model No. _____

Serial No. _____

This product complies with all relevant European directives. For details, please see the Declaration of Incorporation (DOI) at the back of this publication.

Contents

Introduction 1
Setup 2
1 Preparing the Machine 3
2 Preparing the Cutting Unit 3
3 Removing the Reel-Drive Assembly 4
4 Installing the Groomer Drive Box 4
5 Installing the Groomer Drive Cap 6
6 Installing the Idler Assembly 6
7 Installing the Height-of-Cut Bracket Assemblies and the Roller 7
8 Adjusting the Groomer Spring Force 8
9 Installing the Groomer 9
Operation 10
Introduction 10
Adjusting the Groomer Height 11
Changing the Groomer Operating Direction 12
Testing the Groomer Performance 12
Transporting the Machine 13
Maintenance 13
Changing the Gearbox Lubricant 13
Removing the Groomer Drive Box 14
Cleaning the Grooming Reel 15
Inspecting the Blades 15
Restraining the Reel 15

© 2022—The Toro® Company
8111 Lyndale Avenue South
Bloomington, MN 55420

Register at www.Toro.com.

Original Instructions (EN)
Printed in the USA
All Rights Reserved

3457-290

Installation

Loose Parts

Use the chart below to verify that all parts have been shipped.

Procedure	Description	Qty.	Use
1	No parts required	–	Prepare the machine.
2	No parts required	–	Prepare the cutting unit.
3	No parts required	–	Remove the reel-drive assembly.
4	Reel adapter Shim washer Groomer drive box	1 1 1	Install the groomer drive box and weight.
5	Cap	1	Install the groomer drive cap (for universal groomer assemblies with no Rear Roller Brush Kit installed only).
6	Stub-shaft assembly Bearing shield Idler assembly Flange nut	1 2 1 1	Install the idler assembly.
7	Left HOC bracket assembly Right HOC bracket assembly Shoulder bolt (5/16 x 1 inch) Hardened washer Groomer guard Mounting screw Roller (order separately; refer to your authorized Toro distributor)	1 1 2 2 2 2 1	Install the HOC assemblies and the roller.
8	Washer (Part No. 3256-24, not included)	–	Adjust the groomer spring force.
9	Bolt (1/4 x 1-1/2 inches) Locknut Shaft clamp Grooming reel (order separately; contact your authorized Toro distributor)	4 4 4 1	Install the groomer assembly (ordered separately).

1

Preparing the Machine

No Parts Required

Procedure

1. Park the machine on a level surface.
2. Engage the parking brake.
3. Shut off the engine.
4. Remove the spark-plug wire from the spark plug; refer to your *Operator's Manual*.

2

Preparing the Cutting Unit

No Parts Required

Procedure

1. On the cutting unit, loosen the mounting screws that secure each end of the front roller to the height-of-cut arms (Figure 2).

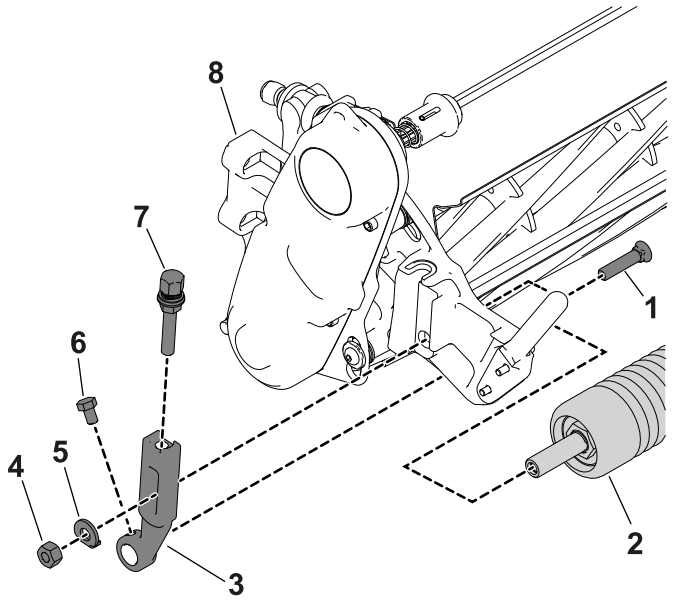

g275540

Figure 2

1. Plow bolt
2. Roller
3. Height-of-cut arm
4. Adjusting screw
5. Washer
6. Flange nut
7. Roller-mounting screw
8. Cutting-unit assembly

2. Remove the plow bolts, washers, and locknuts securing the height-of-cut arms to each end of cutting unit (Figure 2). Remove the height-of-cut arms and roller.

   Note: Save the removed hardware to install the new height-of-cut arms.

3. Remove the height-of-cut adjusting screws and roller-mounting screws from the height-of-cut arms (Figure 3).

   Note: Save the roller mounting screws and the roller for later installation.

4. Remove the 2 bolts (5/16 x 2-1/4 inches) from the 2 nuts (held captive by the side plate) securing the counterweight on the side plate of the cutting unit. Remove the counterweight (Figure 3).

   Note: You may discard the cutting unit counterweight and the mounting bolts.

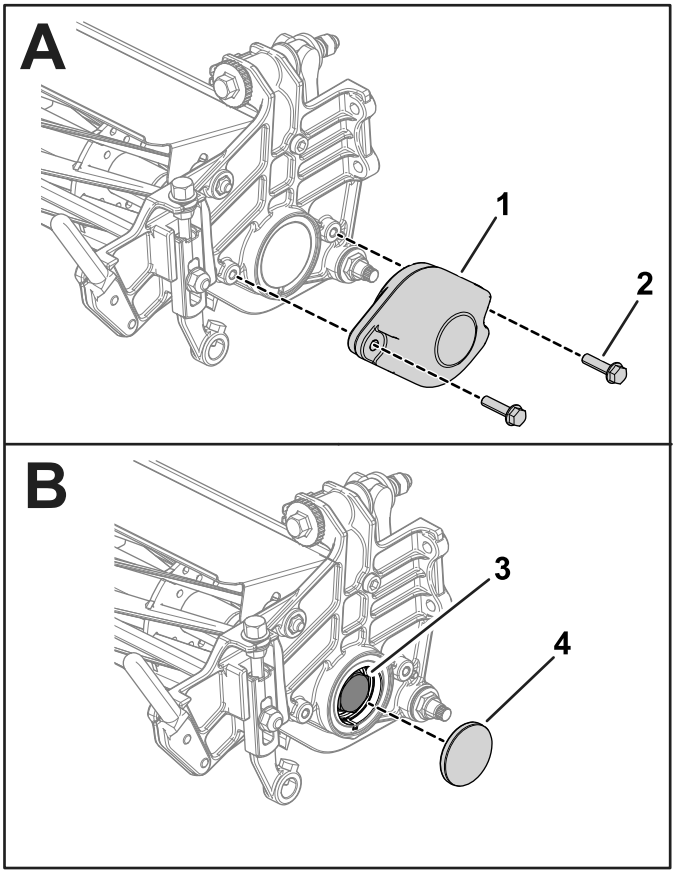

g281094

Figure 3

1. Weight
2. Bolt
3. Bearing nut
4. Cap

5. Restrain the reel to remove the bearing nut; refer to Restraining the Reel for Removing Threaded Inserts (page 15).

6. Remove the cap and to expose the bearing nut (Figure 3).
7. Remove the bearing nut from the reel shaft (Figure 3).

   Important: **Clean the threads in the end of the reel shaft of any debris or grease before installing the splined insert and groomer box from this kit.**

3

Removing the Reel-Drive Assembly

No Parts Required

Procedure

1. Remove the hardware that secures the reel-drive assembly to the side plate (Figure 4).

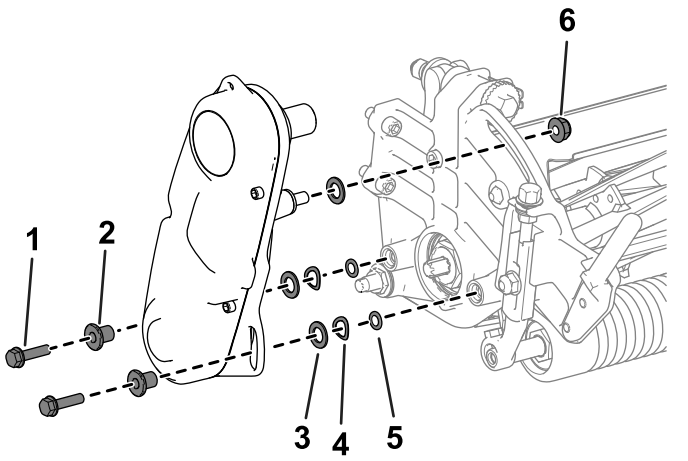

Figure 4

1. Socket-head screw
2. Spacer
3. Washer
4. Spring washer
5. O-ring
6. Nut

2. Remove the reel-drive assembly, flat washers, spring washers, spacers, and O-rings from the side plate (Figure 4).

4

Installing the Groomer Drive Box

Parts needed for this procedure:

1	Reel adapter
1	Shim washer
1	Groomer drive box

Procedure

1. Apply medium-strength, thread-locking compound (such as Blue Loctite® 243) to the internal threads of the drive-box shaft and torque the reel adapter and groomer drive-box shaft to 150 to 163 N·m (110 to 120 ft-lb).

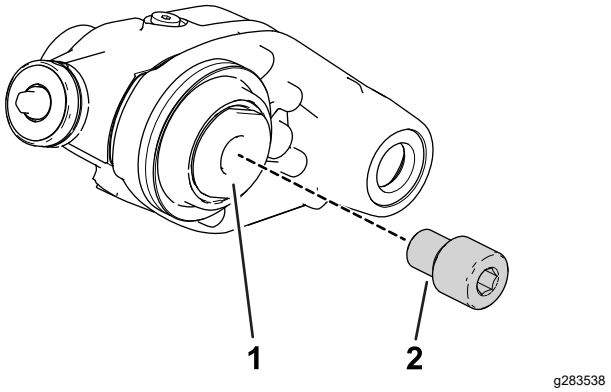

Figure 5

1. Groomer drive-box shaft
2. Reel adapter

Important: **Allow the thread-locking compound to cure for 15 minutes before continuing the procedure.**

Note: When torquing the reel adapter and drive-box shaft, restrain the drive-box shaft with the groomer drive-box socket tool or a 1-3/8 inch wrench and locked in a vice on the wrench flats at the inboard side of the groomer drive box (Figure 6).

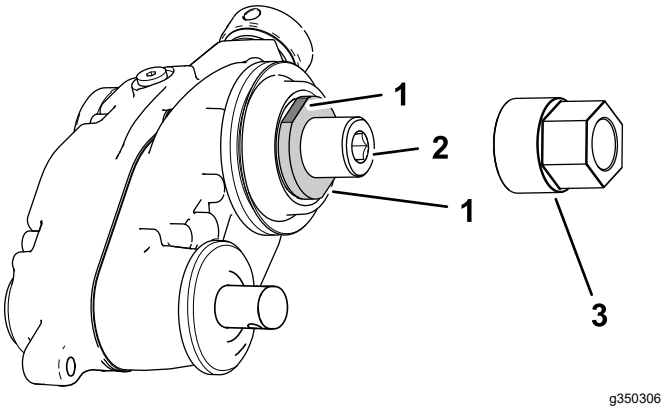

Figure 6

1. Wrench flats for socket tool or wrench (drive-box shaft)
2. Hex socket (reel adapter)
3. Groomer drive-box socket tool (Part No. 137-0920)

2. Assemble the shim washer over the threads of the reel adapter (Figure 7).

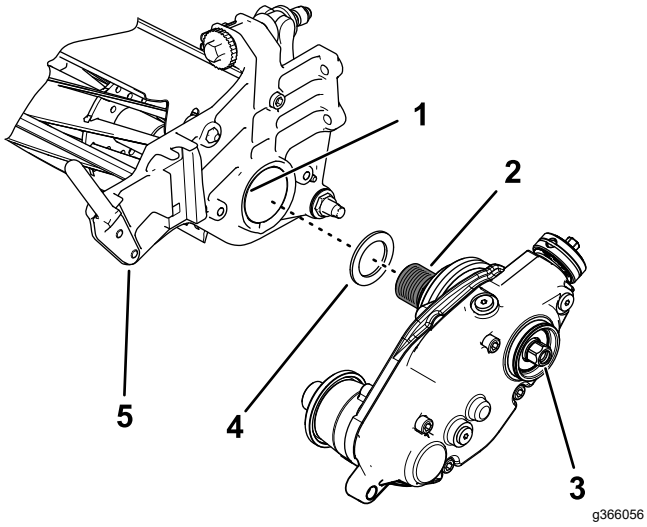

Figure 7

1. Apply thread-locking compound here.
2. Reel adapter into reel shaft
3. Hex head
4. Shim washer
5. Cutting unit

3. Apply medium-strength, thread-locking compound (such as Blue Loctite® 243) to the internal threads of the reel shaft threads.

   Important: **Clean the threads in the end of the reel shaft of any debris or grease before installing the splined insert.**

4. Attach the groomer drive box to the reel shaft (Figure 7).
5. Restrain the cutting reel to install the insert; refer to Restraining the Reel for Installing Threaded Inserts (page 16).
6. While the reel is restrained, torque the hex-head of the drive-box shaft to 135 to 150 N·m (100 to 110 ft-lb); refer to Figure 7.

   Important: **You must torque the hex head of the drive-box shaft to 135 to 150 N·m (100 to 110 ft-lb).**

   Important: **You must use a 6-point socket with heavy wall.**

   Do not use an impact wrench for this step.

   Important: **Allow the thread-locking compound to cure for 15 minutes before continuing the procedure.**

   Note: Do not damage the seal under the outer cover.

7. If you are installing the groomer at the left side of the machine, perform the following steps (Figure 8):

   A. Remove the hex-socket screw that secures the clutch knob to the actuator shaft.

   B. Remove the clutch-knob assembly and flip it over.

   C. Assemble the clutch knob to the actuator shaft with the hex-socket screw.

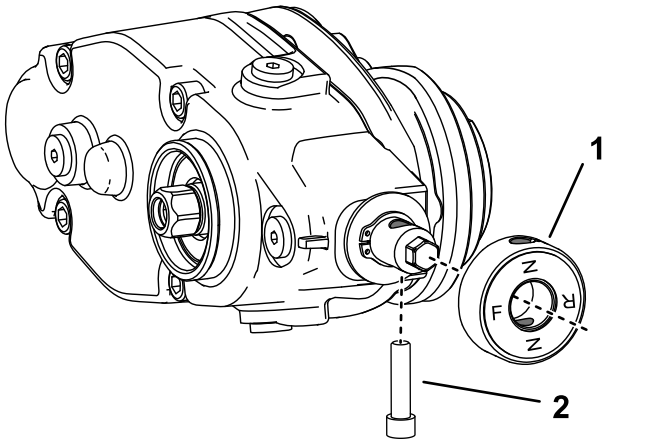

Figure 8
Left-side install shown

1. Clutch-knob assembly
2. Hex-socket bolt

5

Installing the Groomer Drive Cap

Parts needed for this procedure:

1	Cap

Procedure

Perform this procedure only for Universal Groomer assemblies with no Rear Roller Brush Kit installed:

1. Apply medium-strength, cylindrical-bonding retaining compound (such as Green Loctite 609®) around the snap ring groove and the outer diameter surface (Figure 9).
2. Install the cap as shown in Figure 9.

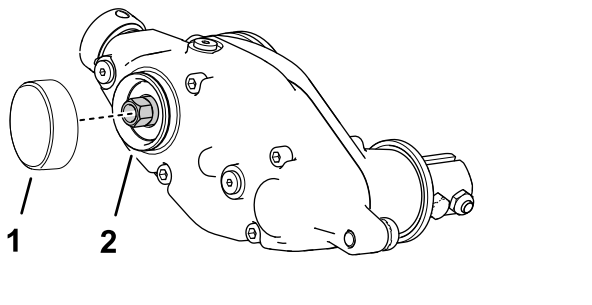

g346927

Figure 9

1. Cap
2. Apply medium-strength bonding compound

6

Installing the Idler Assembly

Parts needed for this procedure:

1	Stub-shaft assembly
2	Bearing shield
1	Idler assembly
1	Flange nut

Procedure

1. Assemble the loose parts to the idler assembly as shown in Figure 10.

   Important: **Install the bearing shields with the fabric side toward the bearings.**

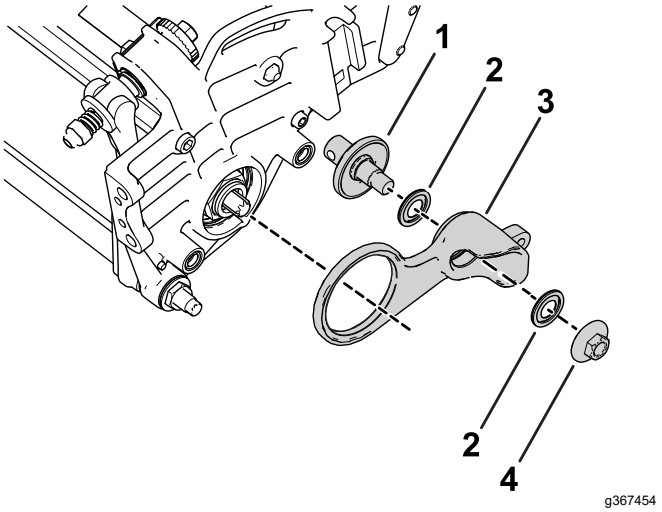

g367454

Figure 10

1. Stub-shaft assembly
2. Bearing shield
3. Idler assembly
4. Flange nut

2. Position the idler assembly on the opposite side of the reel from the groomer drive box.
3. Use the previously removed hardware to install the reel-drive assembly; refer to 3 Removing the Reel-Drive Assembly (page 4).

7

Installing the Height-of-Cut Bracket Assemblies and the Roller

Parts needed for this procedure:

1	Left HOC bracket assembly
1	Right HOC bracket assembly
2	Shoulder bolt (5/16 x 1 inch)
2	Hardened washer
2	Groomer guard
2	Mounting screw
1	Roller (order separately; refer to your authorized Toro distributor)

Procedure

1. Thread the previously removed height-of-cut adjusting screws into the top of the height-of-cut assemblies (Figure 11).

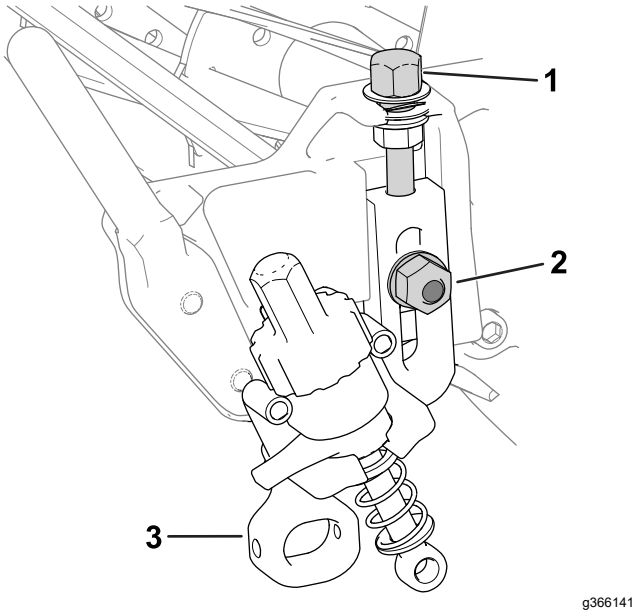

Figure 11

1. Height-of-cut adjusting screw
2. Plow bolt and flange nut
3. Height-of-cut bracket assembly

2. Install the height-of-cut assemblies to the cutting unit side plates using the previously removed plow bolts, flange nuts, and special washers (Figure 11).

3. On the groomer drive box side, position the adjuster-arm rod of the HOC bracket on the inside of the groomer drive box and secure it with a shoulder bolt and a hardened washer as shown in Figure 12; torque the shoulder bolt to 16 to 22 N·m (12 to 16 ft-lb).

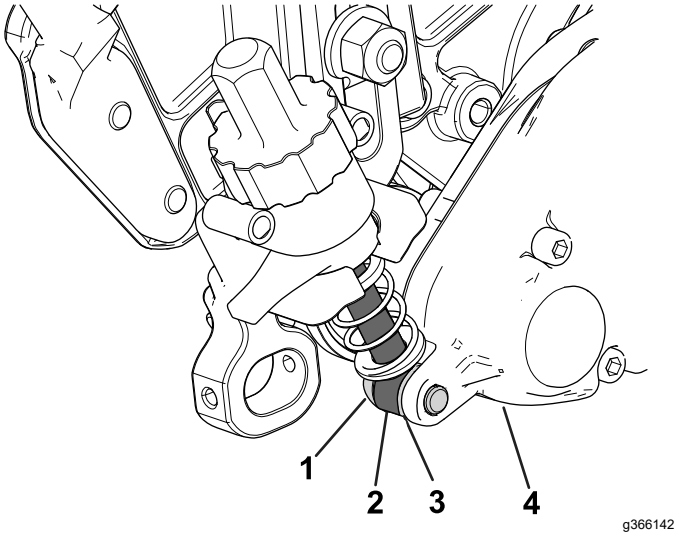

Figure 12

1. Shoulder bolt (5/16 x 1 inch)
2. Adjuster-arm assembly rod
3. Hardened washer
4. Groomer drive box

4. Align the adjuster-arm assembly rod near the adjuster collar on the idler assembly and secure it to the collar with an shoulder bolt and hardened washer (Figure 13); torque the shoulder bolt to 16 to 22 N·m (12 to 16 ft-lb).

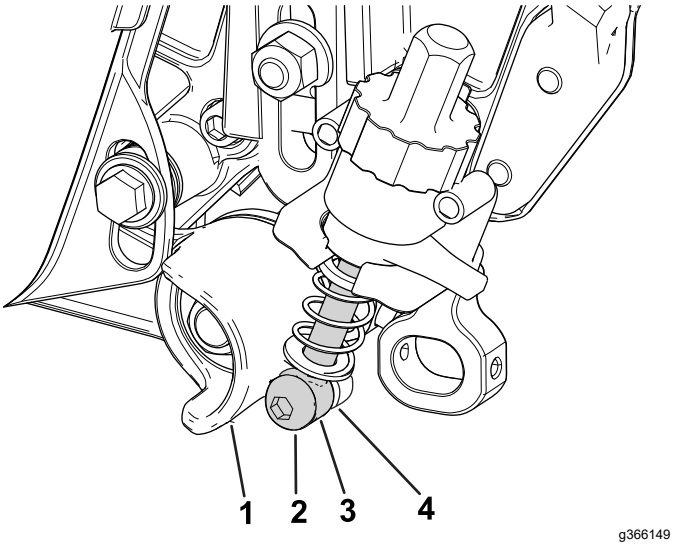

Figure 13

1. Adjuster collar
2. Shoulder bolt (5/16 x 1 inch)
3. Adjuster-arm assembly rod
4. Hardened washer

5. Insert and center the roller shaft between the height-of-cut (HOC) brackets and secure it with 2 mounting screws (Figure 14 or Figure 15).

   You can install the mounting screws in the front (as shown in Figure 14) or rear side (Figure 15) of the HOC brackets. Installing the screws in the front side will allow the groomer to clear the roller; installing them in the rear side will allow the groomer to interlace with the roller.

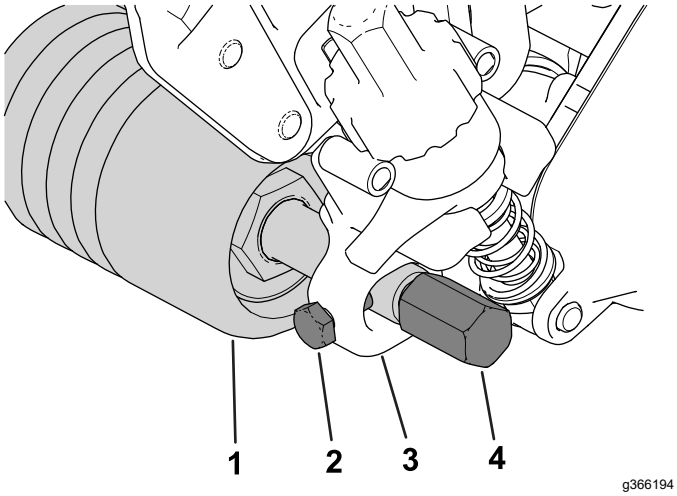

Figure 14

Mounting screws installed to **front** side of HOC brackets

1. Roller
2. Mounting screw
3. Height-of-cut bracket (HOC) assembly
4. Groomer guard

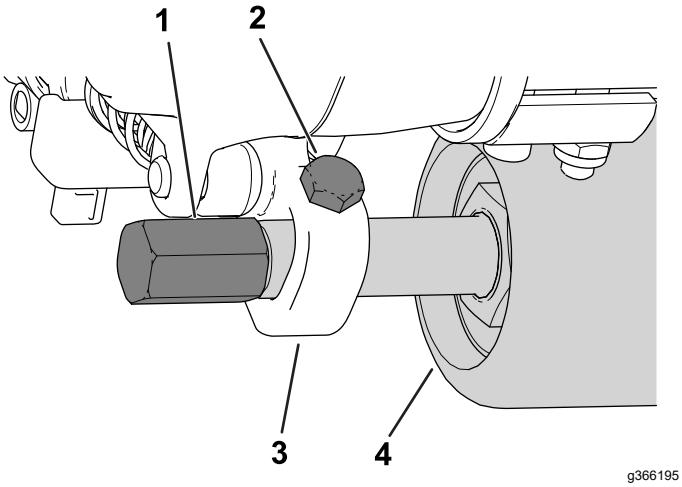

Figure 15

Mounting screws installed to **rear** side of HOC brackets

1. Groomer guard
2. Mounting screw
3. Height-of-cut bracket (HOC) assembly
4. Roller

6. Attach the groomer guards to both sides of the roller shaft (Figure 14).
7. Torque the groomer guards to 22 to 24 N·m (16 to 18 ft-lb).

8

Adjusting the Groomer Spring Force

Parts needed for this procedure:

–	Washer (Part No. 3256-24, not included)

Procedure

For low height-of-groom setups where additional spring force is required, install additional washers (Part No. 3256-24) to the eye bolt to compress the height-of-groom springs at a low height of groom.

1. Set the desired cutting unit height of cut; refer to your cutting unit *Operator's Manual*.
2. Set the desired height of groom; refer to Adjusting the Groomer Height (page 11).
3. Ensure that the groomer adjusters are in the engaged (operating) position; refer to Transporting the Machine (page 13).
4. Measure the distance between the washers (the current spring length) as shown in Figure 16.

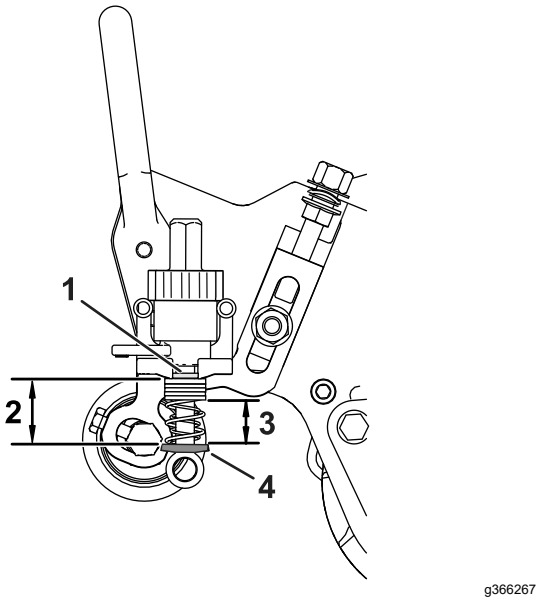

g366267

Figure 16

1. Top washer
2. Original spring length (distance between top and bottom washers)
3. Desired spring length with optional washers (19 mm or 3/4 inches)
4. Bottom washer

5. Subtract the desired spring length (19 mm or 3/4 inches) from the current spring length, and divide this difference by 1.5 mm (1/16 inch) to determine how many washers you need to add to achieve the desired spring length.

9

Installing the Groomer

Parts needed for this procedure:

4	Bolt (1/4 x 1-1/2 inches)
4	Locknut
4	Shaft clamp
1	Grooming reel (order separately; contact your authorized Toro distributor)

Procedure

1. Obtain a grooming reel appropriate for your needs and cutting unit; contact your authorized Toro distributor.
2. Line up the grooming reel with the groomer drive box and idler assembly (Figure 17).

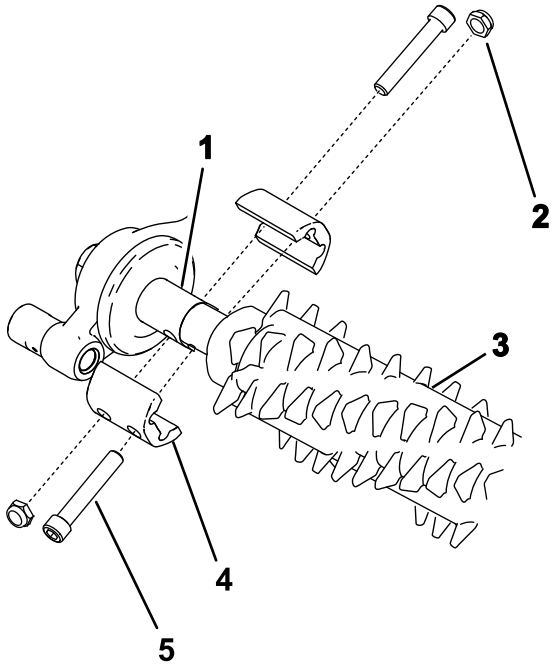

g283516

Figure 17

1. Drive-stub shaft
2. Locknut (4)
3. Groomer assembly
4. Shaft clamp (4)
5. Bolt (4)

3. Secure the groomer to the machine as shown in Figure 17 and snug the bolts.
4. To prevent binding, set the height of cut and height of groom, then loosen the bolts.

   Note: To set the height of cut, refer to your cutting unit *Operator's Manual*; refer to Adjusting the Groomer Height (page 11) for adjusting the height of groom.
5. Torque the bolts to 5 to 7 N·m (46 to 60 in-lb).
6. Check and adjust the height of cut and height of groom as necessary.

Operation

Note: Determine the left and right sides of the machine from the normal operating position.

Introduction

Grooming is performed in the turf canopy above the soil level. Grooming promotes vertical growth of grass plants, reduces grain, and severs stolons, producing a denser turf. Grooming produces a more uniform and tighter playing surface for faster and truer action of the golf ball.

Grooming should not be considered as a replacement for verticutting. Verticutting is generally a more rigorous and periodic treatment that can temporarily damage the playing surface, while grooming is a routine and gentler treatment designed to manicure the turf.

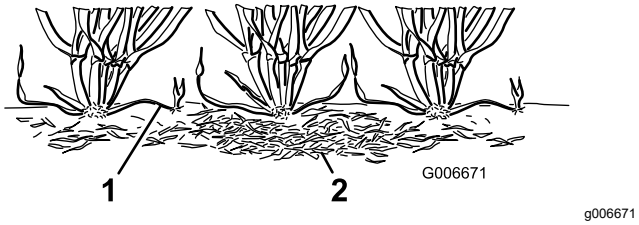

Figure 18

1. Grass runners (stolons) 2. Thatch

Grooming brushes are less intrusive than conventional grooming blades when adjusted to lightly contact the turf canopy. Brushing may be better for the ultra-dwarf cultivars, since these grass types have an upright growth pattern and do not fill in well through horizontal growth. Brushes can injure leaf tissue if they are set to penetrate too deeply into the canopy.

Groomer blades should never penetrate the soil. They are effective in cutting runners and removing thatch.

Because grooming injures leaf tissue, avoid grooming during periods of high stress. Cool season species, such as creeping bent grass and annual bluegrass, should not be groomed during high-temperature (and high-humidity) periods in midsummer.

Many variables affect the performance of grooming, including:

- The time of the year (i.e., the growing season) and the weather pattern
- The general condition of each green
- The frequency of grooming/cutting—both how many cuttings per week and how many passes per cutting
- The height-of-cut setting on the main reel
- The height/depth setting on the grooming reel
- How long the grooming reel has been in use on the green
- The type of grass on the green
- The overall greens management program (i.e., irrigation, fertilizing, spraying, coring, overseeding, etc.)
- Traffic
- Stress periods (i.e., high temperatures, high humidity, unusually high traffic)

These factors can vary from green to green. Inspect the greens frequently and change the grooming practice as needed.

Various grooming shaft assemblies are available. The 13 mm (1/2 inch) spacing allows you to groom slightly deeper to cut stolons without thinning out the turf excessively. By removing spacers and adding blades or by adding spacers and removing blades, you can adjust the spacing between the groomer and blade to 6 mm (1/4 inch) or 19 mm (3/4 inch).

Note: Groom with a 6 mm (1/4 inch) blade spacing for fast-growth periods (spring through early summer) to thin out the top layer of the canopy. Groom with a 19 mm (3/4 inch) blade spacing for slower growth periods (late summer through fall and winter). During high-stress periods, using the grooming reel may cause damage to the turf.

Note: Using the groomer reel improperly or too aggressively (i.e., too deep or too frequent grooming) may unnecessarily stress the turf, causing severe turf damage. Use the groomer cautiously.

Note: Continue changing the direction of cut whenever you use the groomer. This enhances the effects of the grooming.

Note: Operate the groomer in a straight line as much as possible. Use caution when turning while operating the groomer.

Adjusting the Groomer Height

Important: **Never set the groomer lower that 1/2 the height of the cut—up to 13 mm (0.5 inch); you can make adjustments 0 to 6 mm (0 to 0.25 inch) below the height of cut thereafter.**

Important: **If you set the groomer higher that the height of cut, inadvertent groomer contact with the basket may occur when using the QUICK-UP position. Never set the groomer higher than the height of cut in the OPERATION position.**

1. Park the machine on a level surface, engage the parking brake, and shut off the engine.
2. Set the cutting-unit height of cut; refer to your cutting unit *Operator's Manual*.
3. Raise or lower the grooming reel as follows:
   A. Ensure that the the quick-up levers (Figure 19) are in the OPERATION position (i.e., the lever points toward the front of the cutting unit).
   B. At the end of the groomer reel, measure the distance from the lowest tip of the groomer blade to the working surface (Figure 19). Turn the height-adjuster knob (Figure 19) to raise or lower the tip of the groomer blade to the desired height.
   C. Repeat step B on the opposite end of the groomer, then check the setting on the first side of the groomer. The measured height at each end of the groomer reel must be identical. If the measured height at each end of the groomer is different, rotate the adjuster knob(s) until they are identical.

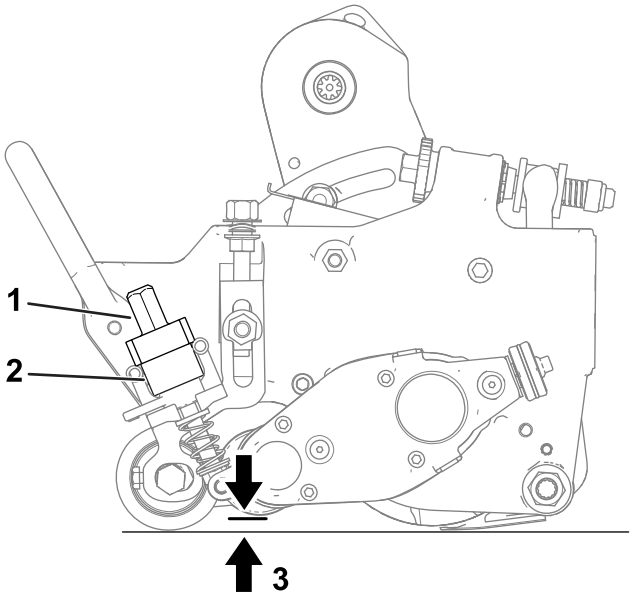

Figure 19

1. Height-adjuster knob
2. Quick-up lever (shown in the OPERATION position)
3. Groomer height (HOG)

Changing the Groomer Operating Direction

The groomer has 3 settings: NEUTRAL (N), FORWARD (F), and REVERSE (R). To change the direction of the groomer, turn the knob at the end of the groomer drive box and align the desired position with the adjustment notch.

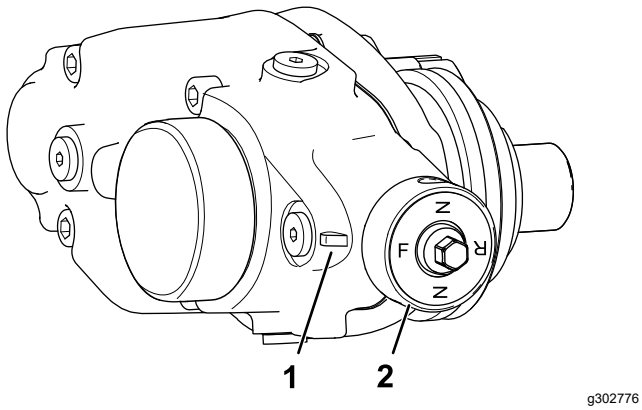

g302776

Figure 20

1. Adjustment notch
2. Knob

Testing the Groomer Performance

Important: **Improper or over-aggressive use of the grooming reel (i.e., too deep or too frequent grooming) may cause unnecessary stress on the turf, leading to severe greens damage. Use the groomer cautiously.**

⚠ DANGER

Contact with the reels or other moving parts can result in personal injury.

- **Before you make any adjustments to the cutting unit, disengage the cutting unit, engage the parking brake, shut off the engine, and wait for all movement to stop.**
- **Keep your hands, feet, and clothing away from the reel or other moving parts.**

To determine the proper height/depth setting, do the following:

1. Set the cutting reel to the height of cut that would normally be used without a grooming reel.
2. Set the groomer reel to the height-of-cut setting above the roller level.
3. Set the grooming brush equal to the height-of-cut setting above the roller.

   Note: Adjust the grooming brush (up or down) in 0.25 mm (0.01 inch) increments to avoid unintended turf damage.
4. Make a pass over the test green, then lower the grooming reel 1/2 the roller level and make another pass over the test green.

   Note: For example, to set a 3.2 mm (1/8 inch) height-of-cut, set the grooming reel at 1.6 mm (1/16 inch) above the roller.
5. Compare the results.

   Note: The first setting (when the groomer setting was adjusted to the height-of-cut setting above the roller level) should have removed significantly less grass and thatch than the second setting.
6. Check the test green 2 or 3 days after the first grooming for general condition or damage. If the groomed areas are turning yellow or brown, and the non-groomed areas are green, the grooming was too aggressive.

   Note: The color of the grass changes when you use the grooming reel. An experienced greens superintendent can judge by the color of the turf (along with close examination) if the current grooming practice is appropriate for the particular green. Because the groom reel stands up more grass and removes thatch, the quality of cut is not the same as without the groomer. This effect is most noticeable the first few times that you use a groomer on a green.

   Note: On multiple passes (i.e., double and triple cutting), the groomer penetrates deeper on each successive pass. Multiple passes are not recommended.

   After testing the performance of the groomer on a test green and you obtain satisfactory results, you can begin grooming on the playing greens. However, each green may respond differently to grooming. In addition, growing conditions constantly change. Inspect the groomed greens frequently and make adjustments to the grooming procedure as often as necessary.

Transporting the Machine

When you wish to mow without the groomer or need to transport the machine, move the quick-up lever to the TRANSPORT position (Figure 21).

Note: This moves the groomer reel into a raised position.

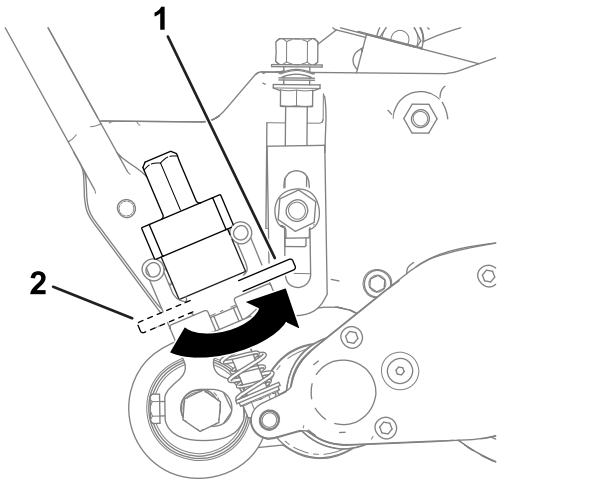

g366193

Figure 21

1. TRANSPORT position
2. OPERATION position

Maintenance

Changing the Gearbox Lubricant

Service Interval:

- After the first 100 hours
- Every 500 hours/yearly (whichever comes first)

1. Clean the external surfaces of the groomer housing.

   Important: **Ensure that there is no dirt or clippings on the outside of the groomer housing; if debris gets inside of the groomer it can damage the gearbox.**

2. Remove the drain plug on the bottom of the housing (Figure 22).

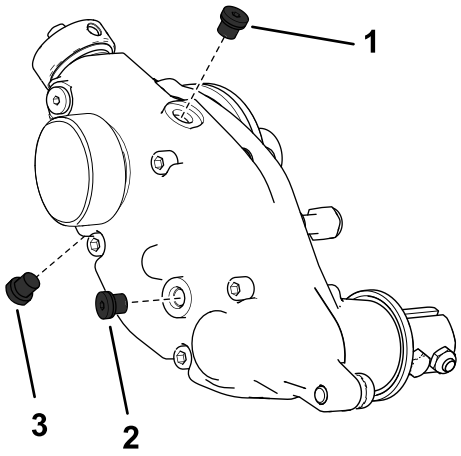

g346930

Figure 22

1. Air-vent plug
2. Fill plug
3. Drain plug

3. Remove the fill plug on the side of the housing and loosen the air vent plug on the top so air can pass through (Figure 22).
4. Align a suitable container beneath the oil drain port to catch drained oil.
5. Tip the cutting unit (as shown in Figure 23) until the drain port is at the bottom to ensure complete drainage.
6. Slowly rock the cutting unit back and forth to ensure that the oil has completely drained from the housing. When the oil is completely drained, place the cutting unit on a level surface as shown in Figure 24.

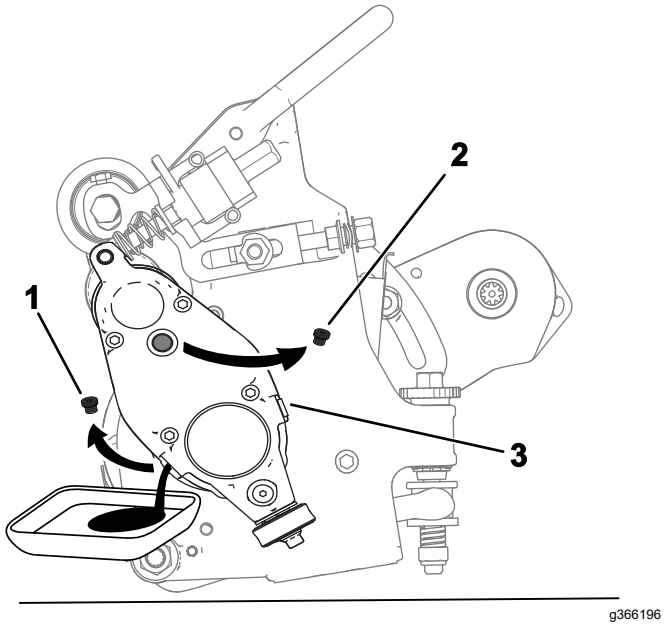

Figure 23

1. Remove the drain plug from the drain port.
2. Remove the fill plug from the fill port.
3. Loosen the air vent plug.

7. Install the drain plug (Figure 22).
8. Use a syringe (Part No. 137-0872) to fill the drive box with 50 cc of 80-90W oil (Figure 24).

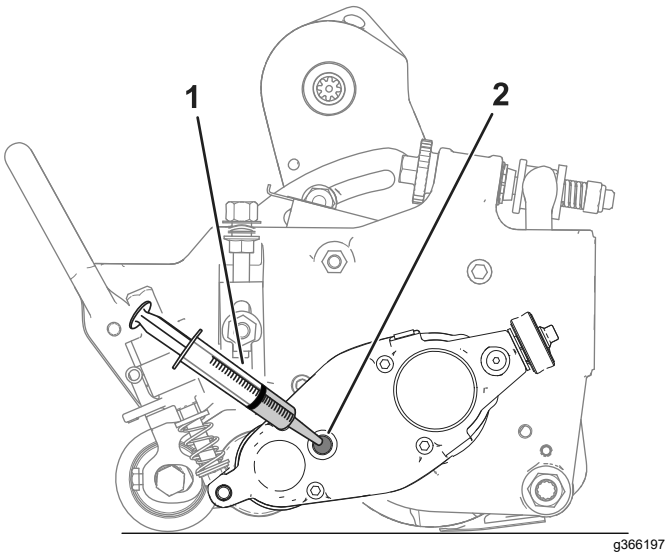

Figure 24

1. Syringe with 50 cc of 80-90W oil
2. Fill port

9. Install the fill plug and tighten the air-vent plug.
10. Torque all plugs to 3 to 5 N·m (27 to 44 in-lb).

Removing the Groomer Drive Box

Note: Retain all removed parts for later installation unless otherwise stated.

Important: **If you have any issues removing the groomer drive box, refer to your traction unit *Service Manual* or contact your authorized Toro distributor.**

1. Remove the cap from the groomer.
2. Remove the clamp bolts connecting the groomer to the drive box; refer to Figure 17 in 9 Installing the Groomer (page 9).
3. Remove the shoulder bolt and hardened washer connecting the groomer drive box to the adjuster arms (Figure 25).

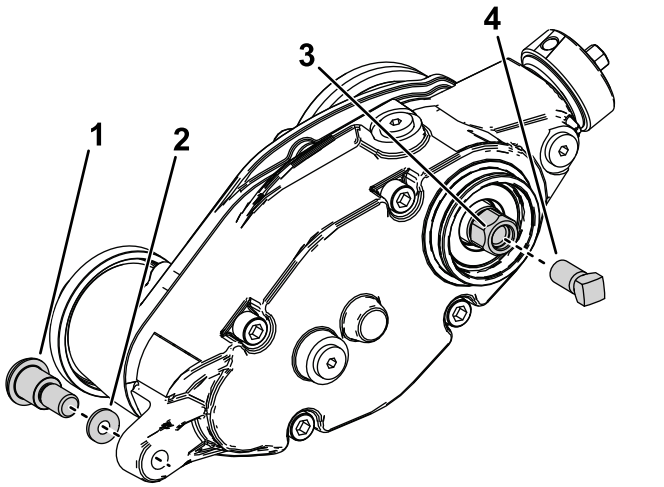

Figure 25

1. Shoulder bolt
2. Hardened washer
3. Groomer drive hex-head
4. Reinforcement screw

4. Restrain the reel for removal; refer to Restraining the Reel for Removing Threaded Inserts (page 15).
5. Install the reinforcement screw (Part No. 1-803022—sold separately) to the internal threads of the groomer drive hex head and torque to 13.5 N·m (120 in-lb) as shown in Figure 25.
6. Remove the groomer drive box from the cutting reel by turning the groomer drive hex-head (Figure 25).

   Important: **If the groomer drive box is installed on the right side of a cutting unit, turn the groomer drive hex-head counter-clockwise (right-hand thread) to remove the drive-box shaft from cutting unit.**

Important: **If the groomer drive box is installed on the left side of a cutting unit, turn the groomer drive hex-head clockwise (left-hand thread) to remove drive-box shaft from cutting unit**

Important: **You must use a 6-point socket with heavy wall.**

Cleaning the Grooming Reel

Service Interval: After each use

Clean off the grooming reel after using it by spraying it with water. Do not direct the water stream directly at the groomer bearing seals. Do not permit the grooming reel to stand in water so that the components rust.

Inspecting the Blades

Service Interval: Before each use or daily

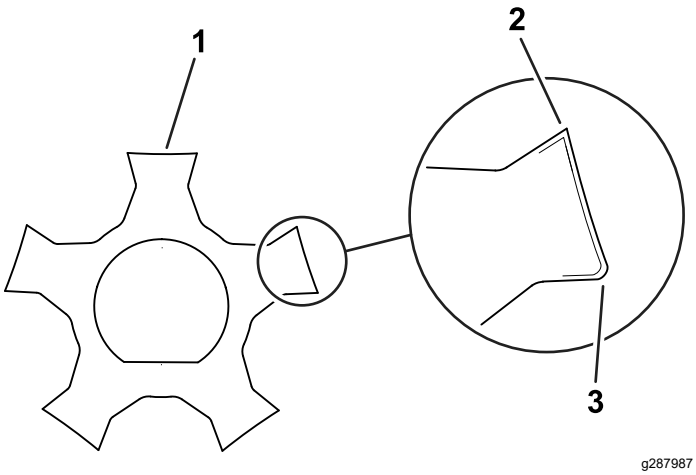

Figure 26

1. Grooming blade
2. Sharp edges
3. Dull (rounded) edges

Inspect the grooming-reel blades frequently for damage and wear. Straighten bent blades with a pliers. Replace worn blades, and torque the locknuts to 42 to 49 N·m (31 to 36 ft-lb). When inspecting the blades, check to see that nuts on the right and left blade-shaft ends are tight.

Note: If you are using spring steel blades, when 1 side of the blades become worn, remove the grooming reel, rotate it 180°, and install it so that the unworn side is facing the direction of rotation.

Note: Because the groomer may introduce more debris (e.g., dirt and sand) into the cutting unit than what the reel would normally be exposed to, check the bedknife and main reel for wear more frequently. This is especially important in sandy soil and/or when the groomer is set for penetration.

Restraining the Reel

⚠ WARNING

The cutting reel blades are sharp and are capable of amputating hands and feet.

- **Keep your hands and feet away from the reel.**
- **Ensure that the reel is restrained before servicing it.**

Restraining the Reel for Removing Threaded Inserts

1. Tip up the cutting unit so that you have access to the bottom of the reel.
2. Insert a long-handled pry bar (recommended 3/8 inch x 12 inches with screwdriver handle) through the bottom of the cutting reel, closest to the side of the cutting unit that you will be torquing (Figure 27).
3. Place the pry bar against the weld side of the reel support plate (Figure 27).

   Note: Insert the pry bar between the top of the reel shaft and the backs of the reel blades so that the reel does not move.

   Important: **Do not contact the cutting edge of any blades with the pry bar; this may damage the cutting edge and/or cause a high blade.**

   Important: **The insert on the left side of the cutting unit has left-hand threads. The insert on the right side of the cutting unit has right-hand threads.**

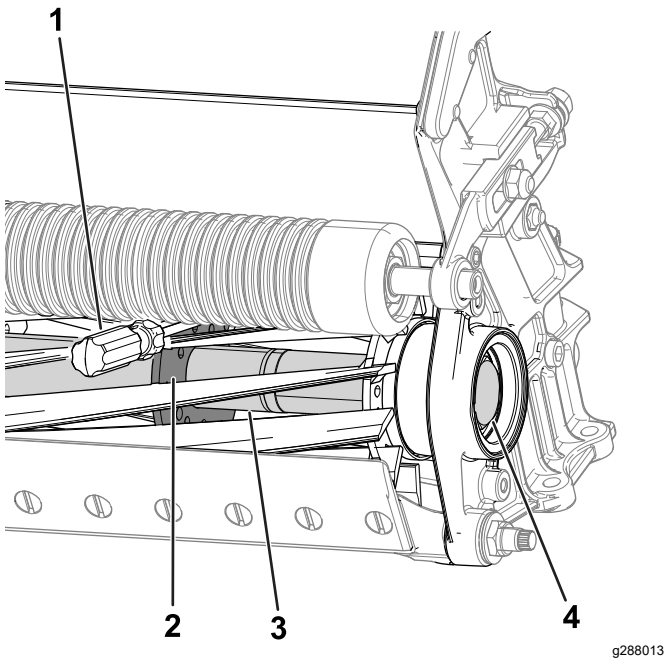

Figure 27

1. Pry bar
2. Weld side of reel support plate
3. Reel shaft
4. Threaded insert for removal

4. Rest the handle of the pry bar against the roller.
5. Complete the removal of the threaded insert while ensuring that the pry bar stays in place, then remove the pry bar.
6. Lower the cutting unit to rest on the rollers.

Restraining the Reel for Installing Threaded Inserts

1. Insert a long-handled pry bar (recommended 3/8 inch x 12 inches with screwdriver handle) through the front of the cutting reel, closest to the side of the cutting unit that you will be torquing (Figure 28).
2. Place the pry bar against the weld side of the reel support plate (Figure 28).

   Note: Insert the pry bar between the top of the reel shaft and the backs of the reel blades so that the reel does not move.

   Important: **Do not contact the cutting edge of any blades with the pry bar; this may damage the cutting edge or cause a high blade.**

   Important: **The insert on the left side of the cutting unit has left-hand threads. The insert on the right side of the cutting unit has right-hand threads.**

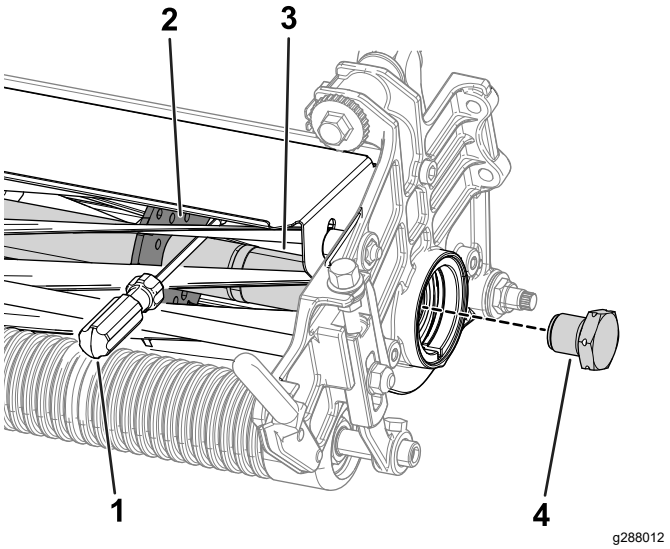

Figure 28

1. Pry bar
2. Weld side of the support plate
3. Reel shaft
4. Threaded insert for installation

3. Rest the handle of the pry bar against the roller.
4. Per the insert's installation instructions and torque requirements, complete the installation of the threaded insert while ensuring that the pry bar stays in place, then remove the pry bar.

Declaration of Incorporation

The Toro Company, 8111 Lyndale Ave. South, Bloomington, MN, USA declares that the following unit(s) conform(s) to the directives listed, when installed in accordance with the accompanying instructions onto certain Toro models as indicated on the relevant Declarations of Conformity.

Model No.	Serial No.	Product Description	Invoice Description	General Description	Directive
04707	319000375 and Up	Universal Groomer Drive Kit, Greensmaster 1018, 1021, or 1026 Mower	UNIVERSAL GROOMER DRIVE GR 10XX SERIES	Groomer Drive System	2006/42/EC

Relevant technical documentation has been compiled as required per Part B of Annex VII of 2006/42/EC.

We will undertake to transmit, in response to requests by national authorities, relevant information on this partly completed machinery. The method of transmission shall be electronic transmittal.

This machinery shall not be put into service until incorporated into approved Toro models as indicated on the associated Declaration of Conformity and in accordance with all instructions, whereby it can be declared in conformity with all relevant Directives.

Certified:



Tom Langworthy
Engineering Director
8111 Lyndale Ave. South
Bloomington, MN 55420, USA
September 15, 2022

Authorized Representative:

Marcel Dutrieux
Manager European Product Integrity
Toro Europe NV
Nijverheidsstraat 5
2260 Oevel
Belgium

UK Declaration of Incorporation

The Toro Company, 8111 Lyndale Ave. South, Bloomington, MN, USA declares that the following unit(s) conform(s) to the directives listed, when installed in accordance with the accompanying instructions onto certain Toro models as indicated on the relevant Declarations of Conformity.

Model No.	Serial No.	Product Description	Invoice Description	General Description	Regulation
04707	319000375 and Up	Universal Groomer Drive Kit, Greensmaster 1018, 1021, or 1026 Mower	UNIVERSAL GROOMER DRIVE GR 10XX SERIES	Groomer Drive System	S.I. 2008 No. 1597 (Machinery Safety)

Relevant technical documentation has been compiled as required per Schedule 10 of S.I. 2008 No. 1597.

We will undertake to transmit, in response to requests by national authorities, relevant information on this partly completed machinery. The method of transmission shall be electronic transmittal.

This machinery shall not be put into service until incorporated into approved Toro models as indicated on the associated Declaration of Conformity and in accordance with all instructions, whereby it can be declared in conformity with all relevant Directives.

This declaration has been issued under the sole responsibility of the manufacturer.
The object of the declaration is in conformity with relevant UK legislation.



Tom Langworthy
Engineering Director
8111 Lyndale Ave. South
Bloomington, MN 55420, USA
September 15, 2022

Authorized Representative:

Marcel Dutrieux
Manager European Product Integrity
Toro U.K. Limited
Spellbrook Lane West
Bishop's Stortford
CM23 4BU
United Kingdom

EEA/UK Privacy Notice

Toro's Use of Your Personal Information

The Toro Company ("Toro") respects your privacy. When you purchase our products, we may collect certain personal information about you, either directly from you or through your local Toro company or dealer. Toro uses this information to fulfil contractual obligations - such as to register your warranty, process your warranty claim or to contact you in the event of a product recall - and for legitimate business purposes - such as to gauge customer satisfaction, improve our products or provide you with product information which may be of interest. Toro may share your information with our subsidiaries, affiliates, dealers or other business partners in connection these activities. We may also disclose personal information when required by law or in connection with the sale, purchase or merger of a business. We will never sell your personal information to any other company for marketing purposes.

Retention of your Personal Information

Toro will keep your personal information as long as it is relevant for the above purposes and in accordance with legal requirements. For more information about applicable retention periods please contact legal@toro.com.

Toro's Commitment to Security

Your personal information may be processed in the US or another country which may have less strict data protection laws than your country of residence. Whenever we transfer your information outside of your country of residence, we will take legally required steps to ensure that appropriate safeguards are in place to protect your information and to make sure it is treated securely.

Access and Correction

You may have the right to correct or review your personal data, or object to or restrict the processing of your data. To do so, please contact us by email at legal@toro.com. If you have concerns about the way in which Toro has handled your information, we encourage you to raise this directly with us. Please note that European residents have the right to complain to your Data Protection Authority.

The Toro Warranty

Two-Year or 1,500 Hours Limited Warranty

Conditions and Products Covered

The Toro Company warrants your Toro Commercial product (“Product”) to be free from defects in materials or workmanship for 2 years or 1,500 operational hours*, whichever occurs first. This warranty is applicable to all products with the exception of Aerators (refer to separate warranty statements for these products). Where a warrantable condition exists, we will repair the Product at no cost to you including diagnostics, labor, parts, and transportation. This warranty begins on the date the Product is delivered to the original retail purchaser.
* Product equipped with an hour meter.

Instructions for Obtaining Warranty Service

You are responsible for notifying the Commercial Products Distributor or Authorized Commercial Products Dealer from whom you purchased the Product as soon as you believe a warrantable condition exists. If you need help locating a Commercial Products Distributor or Authorized Dealer, or if you have questions regarding your warranty rights or responsibilities, you may contact us at:

Toro Commercial Products Service Department
8111 Lyndale Avenue South
Bloomington, MN 55420-1196

952–888–8801 or 800–952–2740
E-mail: commercial.warranty@toro.com

Owner Responsibilities

As the product owner, you are responsible for required maintenance and adjustments stated in your *Operator's Manual*. Repairs for product issues caused by failure to perform required maintenance and adjustments are not covered under this warranty.

Items and Conditions Not Covered

Not all product failures or malfunctions that occur during the warranty period are defects in materials or workmanship. This warranty does not cover the following:

- Product failures which result from the use of non-Toro replacement parts, or from installation and use of add-on, or modified non-Toro branded accessories and products.
- Product failures which result from failure to perform recommended maintenance and/or adjustments.
- Product failures which result from operating the Product in an abusive, negligent, or reckless manner.
- Parts consumed through use that are not defective. Examples of parts which are consumed, or used up, during normal Product operation include, but are not limited to, brake pads and linings, clutch linings, blades, reels, rollers and bearings (sealed or greasable), bed knives, spark plugs, castor wheels and bearings, tires, filters, belts, and certain sprayer components such as diaphragms, nozzles, flow meters, and check valves.
- Failures caused by outside influence, including, but not limited to, weather, storage practices, contamination, use of unapproved fuels, coolants, lubricants, additives, fertilizers, water, or chemicals.
- Failure or performance issues due to the use of fuels (e.g. gasoline, diesel, or biodiesel) that do not conform to their respective industry standards.
- Normal noise, vibration, wear and tear, and deterioration. Normal “wear and tear” includes, but is not limited to, damage to seats due to wear or abrasion, worn painted surfaces, scratched decals or windows.

Parts

Parts scheduled for replacement as required maintenance are warranted for the period of time up to the scheduled replacement time for that part. Parts replaced under this warranty are covered for the duration of the original product warranty and become the property of Toro. Toro will make the final decision whether to repair any existing part or assembly or replace it. Toro may use remanufactured parts for warranty repairs.

Deep Cycle and Lithium-Ion Battery Warranty

Deep cycle and Lithium-Ion batteries have a specified total number of kilowatt-hours they can deliver during their lifetime. Operating, recharging, and maintenance techniques can extend or reduce total battery life. As the batteries in this product are consumed, the amount of useful work between charging intervals will slowly decrease until the battery is completely worn out. Replacement of worn out batteries, due to normal consumption, is the responsibility of the product owner.
Note: (Lithium-Ion battery only): Refer to the battery warranty for additional information.

Lifetime Crankshaft Warranty (ProStripe 02657 Model Only)

The Prostripe which is fitted with a genuine Toro Friction Disc and Crank-Safe Blade Brake Clutch (integrated Blade Brake Clutch (BBC) + Friction Disc assembly) as original equipment and used by the original purchaser in accordance with recommended operating and maintenance procedures, are covered by a Lifetime Warranty against engine crankshaft bending. Machines fitted with friction washers, Blade Brake Clutch (BBC) units and other such devices are not covered by the Lifetime Crankshaft Warranty.

Maintenance is at Owner’s Expense

Engine tune-up, lubrication, cleaning and polishing, replacement of filters, coolant, and completing recommended maintenance are some of the normal services Toro products require that are at the owner’s expense.

General Conditions

Repair by an Authorized Toro Distributor or Dealer is your sole remedy under this warranty.

The Toro Company is not liable for indirect, incidental or consequential damages in connection with the use of the Toro Products covered by this warranty, including any cost or expense of providing substitute equipment or service during reasonable periods of malfunction or non-use pending completion of repairs under this warranty. Except for the Emissions warranty referenced below, if applicable, there is no other express warranty. All implied warranties of merchantability and fitness for use are limited to the duration of this express warranty.

Some states do not allow exclusions of incidental or consequential damages, or limitations on how long an implied warranty lasts, so the above exclusions and limitations may not apply to you. This warranty gives you specific legal rights, and you may also have other rights which vary from state to state.

Note Regarding Emissions Warranty

The Emissions Control System on your Product may be covered by a separate warranty meeting requirements established by the U.S. Environmental Protection Agency (EPA) and/or the California Air Resources Board (CARB). The hour limitations set forth above do not apply to the Emissions Control System Warranty. Refer to the Engine Emission Control Warranty Statement supplied with your product or contained in the engine manufacturer’s documentation.

Countries Other than the United States or Canada

Customers who have purchased Toro products exported from the United States or Canada should contact their Toro Distributor (Dealer) to obtain guarantee policies for your country, province, or state. If for any reason you are dissatisfied with your Distributor's service or have difficulty obtaining guarantee information, contact your Authorized Toro Service Center.