TORO®

Operator's Manual

Ultra Buggy e2500

Model—Serial Range

68037—400000000 and Up
68037G—400000000 and Up

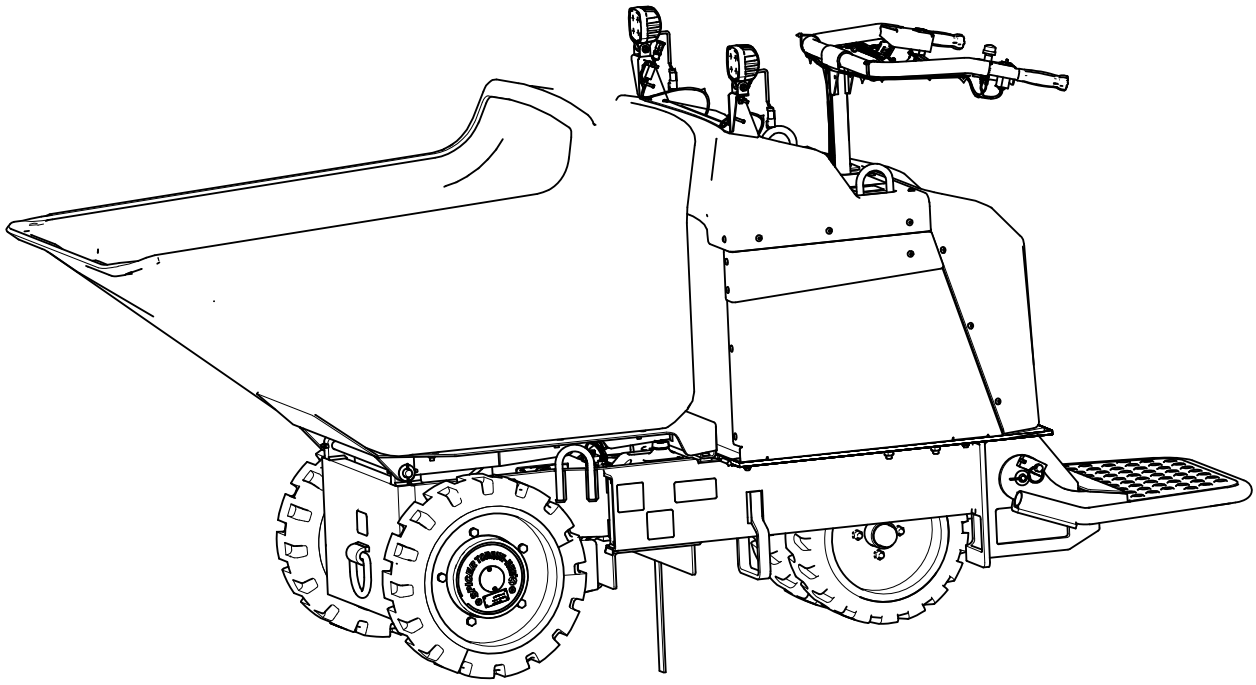

3465-683B

Original Instructions (EN)

3465-683 B

Disclaimers and Regulatory Information

⚠ WARNING

CALIFORNIA
Proposition 65

The power cord on this product contains lead, a chemical known to the State of California to cause birth defects or other reproductive harm. Wash hands after handling.

Battery posts, terminals, and related accessories contain lead and lead compounds, chemicals known to the State of California to cause cancer and reproductive harm. Wash hands after handling.

Use of this product may cause exposure to chemicals known to the State of California to cause cancer, birth defects, or other reproductive harm.

FCC

This device complies with Part 15 of the FCC Rules. Operation is subject to the following conditions: (1) this device may not cause harmful interference, and (2) this device must accept any interference received, including interference that may cause undesired operation. Changes or modifications not expressly approved by Toro could void the user's authority to operate the equipment.

In addition, while in charging mode this equipment has been tested and found to comply with the limits for a Class B digital device, pursuant to Part 15 of the FCC rules. These limits are designed to provide reasonable protection against harmful interference in a residential installation. This equipment generates, uses and can radiate radio frequency energy and, if not installed and used in accordance with the instructions, may cause harmful interference to radio communications. However, there is no guarantee that interference will not occur in a particular installation. If this equipment does cause harmful interference to radio or television reception, which can be determined by turning the equipment off and on, the user is encouraged to try to correct the interference by one or more of the following measures:

- Reorient or relocate the receiving antenna.
- Increase the separation between the equipment and receiver.
- Connect equipment into an outlet on a circuit different from that to which the receiver is connected.
- Consult the dealer or an experienced radio/TV technician for help.

© 2024—The Toro® Company
8111 Lyndale Ave So
Bloomington, MN 55044

Contact us at www.Toro.com
Printed in the USA
All rights reserved

Table of Contents

Disclaimers and Regulatory Information 2
Chapter 1: Introduction 1–1
- Intended Use 1–1
- Getting Help 1–1
- Manual Conventions 1–2
  - Safety Alert Classifications 1–2

Chapter 2: Safety 2–1
- General Safety 2–1
- Safety and Instructional Decals 2–1

Chapter 3: Product Overview 3–1
- Controls 3–1
  - Electrical Service Disconnect Switch 3–1
  - Directional Switch 3–2
  - Dump Controls 3–2
  - Emergency Stop 3–2
  - Key Switch 3–3
  - Light Switch 3–3
  - Throttle Control 3–3
  - Display 3–4
- Specifications 3–7
- Attachments/Accessories 3–7

Chapter 4: Operation 4–1
- Before Operation 4–1
  - Before Operation Safety 4–1
  - Performing Daily Maintenance 4–2
- During Operation 4–2
  - During Operation Safety 4–2
  - Starting the Machine 4–4
  - Shutting off the Machine 4–4
  - Operating the Machine 4–4
  - Operator Platform 4–5
  - Operating the Hopper 4–7
- After Operation 4–7
  - After Operation Safety 4–7
  - Lowering the Hopper without Power 4–8
  - Raising the Hopper without Power 4–9
  - Haul the Machine 4–10

Chapter 5: Maintenance 5–1
- Maintenance Safety 5–1
- Recommended Maintenance Schedule 5–2
- Pre-Maintenance Procedures 5–3
  - Retrieving a Machine 5–3
  - Lifting the Machine 5–4
  - Using the Cylinder Lock 5–5
- Lubrication 5–6
  - Greasing the Machine 5–6
- Electrical System Maintenance 5–7
  - Checking the Anti-Static Strap 5–7
  - Battery Service 5–7
- Drive System Maintenance 5–10
  - Inspecting the Tires 5–10

Torquing the Wheel Lug Nuts 5–10
Drive-Motor Gear Oil Specifications 5–10
Changing the Drive-Motor Gear Oil 5–11
Hydraulic System Maintenance 5–12
Hydraulic Fluid Specifications 5–12
Checking the Hydraulic Lines 5–12
Changing the Hydraulic Fluid 5–12
Cleaning 5–13
Removing Debris 5–13
Washing the Machine 5–13
Chapter 6: Storage 6–1
Storage Safety 6–1
Preparing the Machine for Storage Over 30 Days 6–1
Battery Storage Requirements 6–1
Chapter 7: Troubleshooting 7–1
California Proposition 65 Warning Information

Intended Use

This machine is intended to be used by professional, hired operators on indoor and outdoor improved surfaces in commercial applications. It is primarily designed to move concrete, mortar, gravel, dirt, or debris around job sites. Using this product for purposes other than its intended use could prove dangerous to you and bystanders.

Read this information carefully to learn how to operate and maintain your product properly and to avoid injury and product damage. You are responsible for operating the product properly and safely.

Getting Help

Visit www.Toro.com for product safety and operation training materials, accessory information, help finding a dealer, or to register your product.

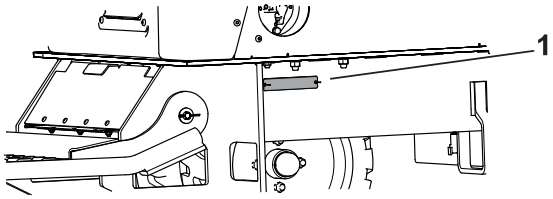

G425720

Whenever you need service, genuine Toro parts, or additional information, contact an Authorized Service Dealer or Toro Customer Service and have the model and serial numbers of your product ready. These numbers are located on the serial plate on your product (1). Write the numbers in the space provided.

IMPORTANT

With your mobile device, you can scan the QR code on the serial number decal (if equipped) to access warranty, parts, and other product information.

Model Number:		**Serial Number:**	

Manual Conventions

This manual identifies potential hazards and has safety messages identified by the safety-alert symbol, which signals a hazard that may cause serious injury or death if you do not follow the recommended precautions.



G405934

This manual uses 2 words to highlight information. **Important** calls attention to special mechanical information and **Note** emphasizes general information worthy of special attention.

Safety Alert Classifications

The safety-alert symbol shown in this manual and on the machine identifies important safety messages that you must follow to prevent accidents.

Safety-alert symbol appears above information that alerts you to unsafe actions or situations and is followed by the word **DANGER**, **WARNING**, or **CAUTION**.

DANGER

Danger indicates an imminently hazardous situation which, if not avoided, *will* result in death or serious injury.

WARNING

Warning indicates a potentially hazardous situation which, if not avoided, *could* result in death or serious injury.

CAUTION

Caution indicates a potentially hazardous situation which, if not avoided, *may* result in minor or moderate injury.

General Safety

- Read and understand the contents of this *Operator's Manual* before starting the machine.
- Do not operate the machine without all guards and other safety protective devices in place and functioning properly on the machine.
- Park the machine on a level surface, lower the hopper, shut off the machine, and remove the key (if applicable) before leaving the operating position.
- Keep your hands and feet away from moving parts. If possible, do not make adjustments with the machine running.

Improperly using or maintaining the machine can result in injury.

Safety and Instructional Decals

Safety decals and instructions are easily visible to the operator and are located near any area of potential danger. Replace any decal that is damaged or missing.

Decal Part: 115-4858



decal115-4858

(1) Force from above can cause crushing of fingers, hands, toes, or feet —install the cylinder lock.

Decal Part: 125-4959

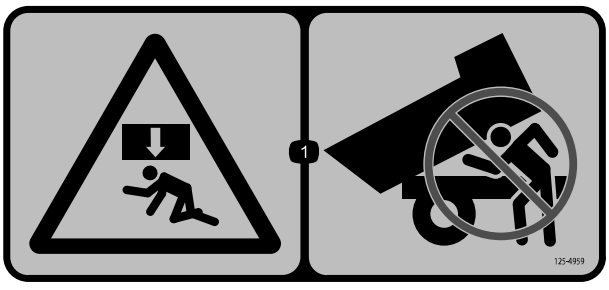

decal125-4959

(1) Force from above can cause crushing of the whole body—never place your head under the hopper.

Decal Part: 125-4967

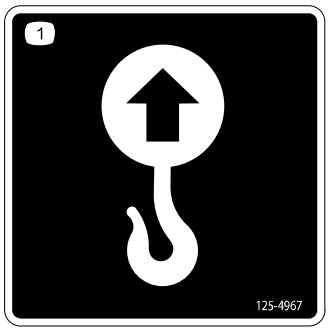

decal125-4967

(1) Lift point

Decal Part: 125-6694

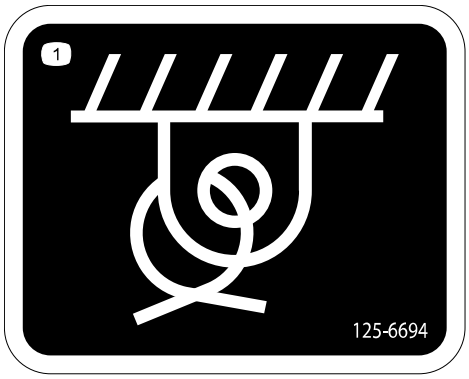

decal125-6694

(1) Tie-down location

Decal Part: 133-8061



s_decal133-8061

Decal Part: 144-0275



decal144-0275

(1) Batteries are flammable.

Decal Part: 144-0277

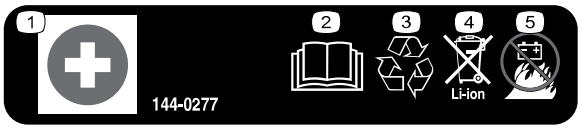

decal144-0277

1. Positive terminal
2. Read the *Operator's Manual*.
3. Recycle the battery.
4. Do not dispose improperly.
5. Do not expose to fire.

Decal Part: 145-1168

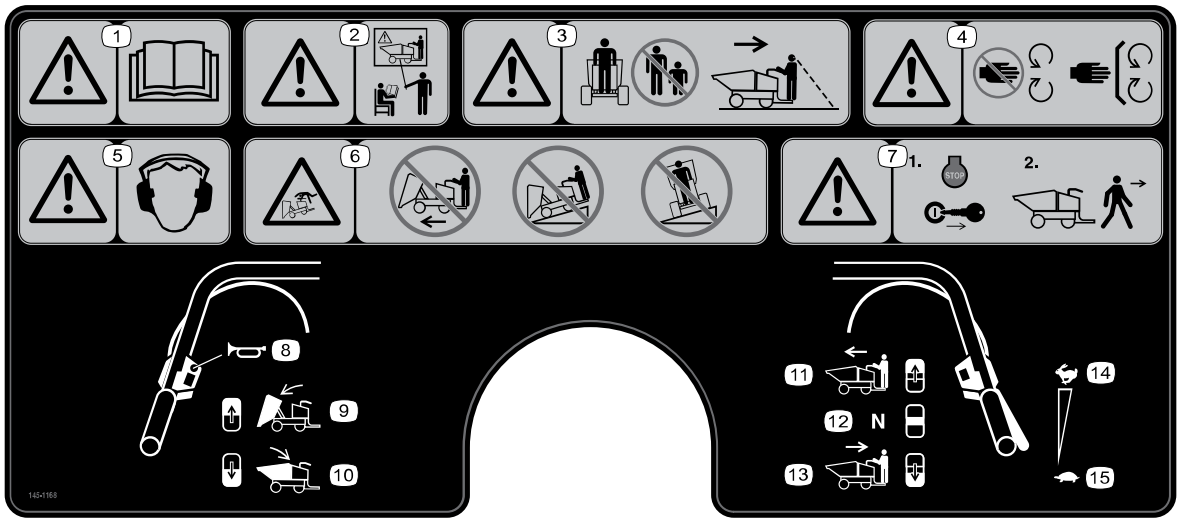

decal145-1168

1. Warning—read the *Operator's Manual*.
2. Warning—all operators should read the *Operator's Manual* and be trained before operating the machine.
3. Warning—keep bystanders away; look behind and down when moving in reverse.
4. Warning—stay away from moving parts; keep all guards and shields in place.
5. Warning—wear hearing protection.
6. Tipping hazard—do not drive forward with the hopper raised; do not drive down slopes with the hopper raised; do not drive across slopes with the hopper raised.
7. Warning—shut off the machine and remove the key before leaving the operator's position.
8. Horn
9. Raise the hopper.
10. Lower the hopper.
11. Toggle the switch forward to set the machine direction to forward.
12. Toggle the switch to the middle position to put the machine in neutral.
13. Toggle the switch backward to set the machine direction to backward.
14. Fast
15. Slow

Decal Part: 145-1169

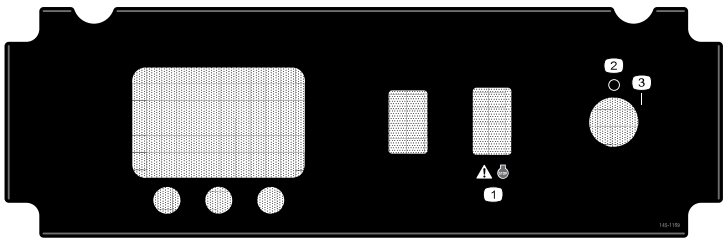

decal145-1169

1. Warning—shut off the machine.
2. Off
3. On

Decal Part: 145-1170

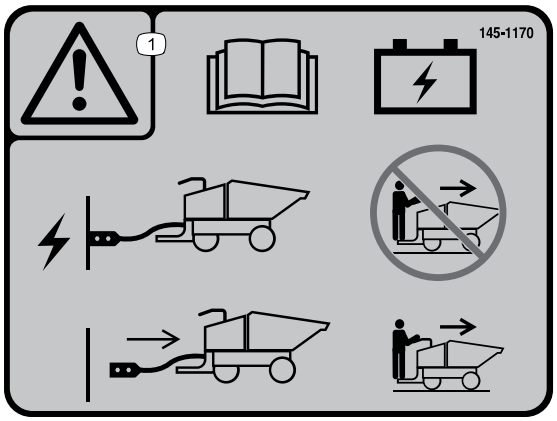

decal145-1170

1 Warning—read the *Operator's Manual* for charging information; do not operate the machine when the machine is charging; disconnect the charging cord before operating the machine.

Decal Part: 145-1173

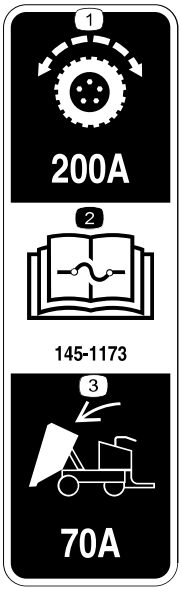

decal145-1173

1 Traction drive

2 Read the *Operator's Manual* for fuse information.

3 Hopper lift cylinder

Decal Part: 145-1175

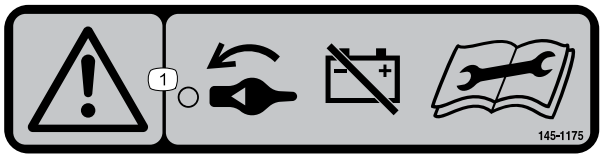

decal145-1175

1 Warning—turn the battery disconnect switch to the OFF position before performing maintenance.

Decal Part: 145-1181

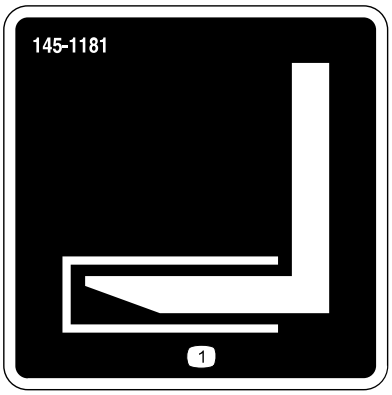

decal145-1181

1 Forklift lifting point

Decal Part: 145-1174

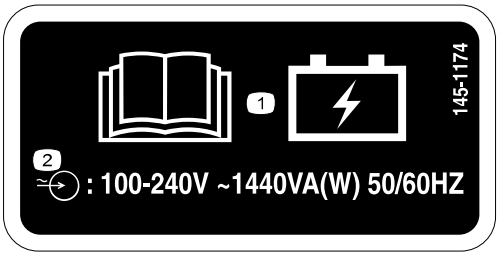

decal145-1174

1 Read the *Operator's Manual* for battery charging information.

2 Battery charger input specifications

Decal Part: 145-5301

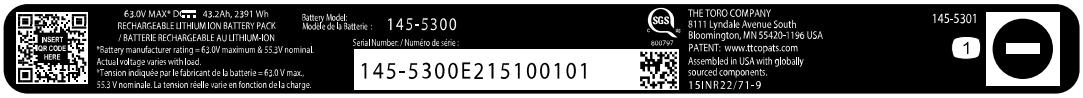

145-5301

1 Negative battery terminal

Decal Part: 145-5338



decal145-5338

1 Warning—read the *Operator's Manual*.

2 Warning—do not open the battery; do not use a damaged battery.

3 Explosion hazard—do not expose to sparks or open flame.

4 Electric shock hazard—do not perform maintenance on the battery.

5 Electric shock hazard

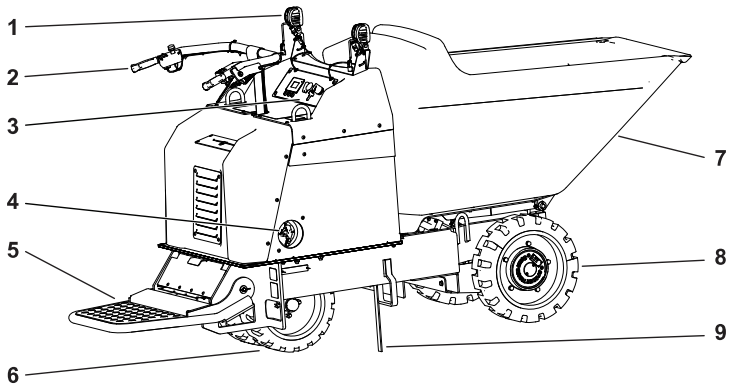

G380315

1. Work lights
2. Handle bars
3. Control panel
4. Electrical service disconnect switch
5. Operator platform
6. Steering tires
7. Hopper
8. Drive tires
9. Anti-static strap

Controls

Electrical Service Disconnect Switch

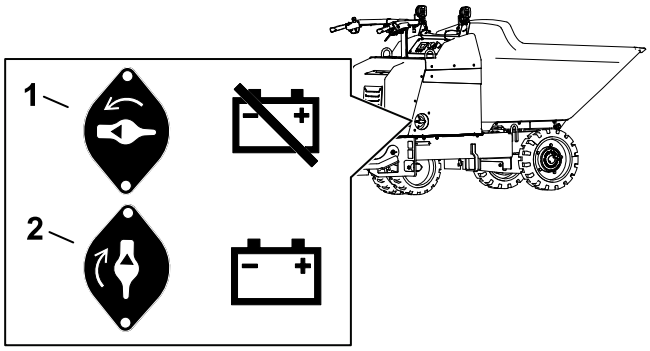

G387210

1. Off—to de-energize the machine electrically
2. On—to energize the machine electrically

Directional Switch

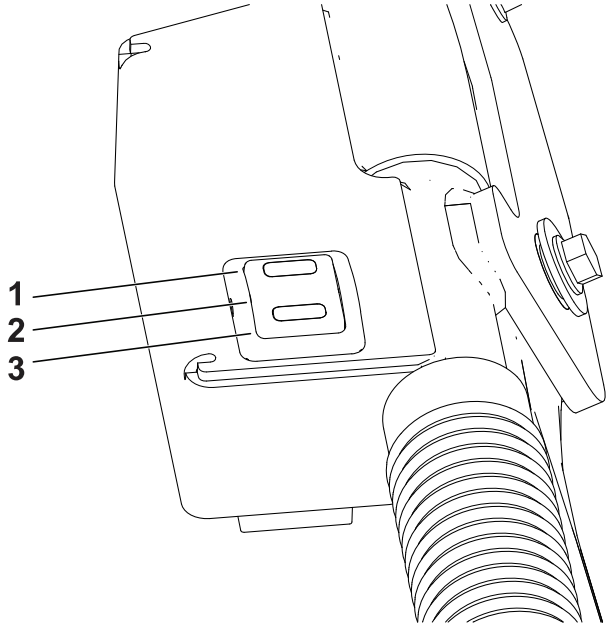

G380320

1. Drive forward
2. Neutral
3. Drive backward

Dump Controls

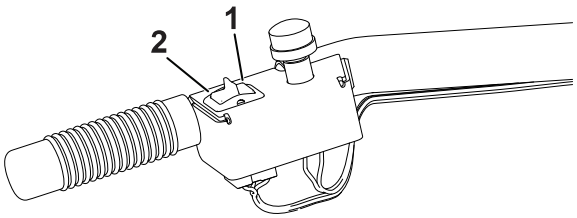

G380321

1. Dump hopper
2. Lower hopper

Emergency Stop

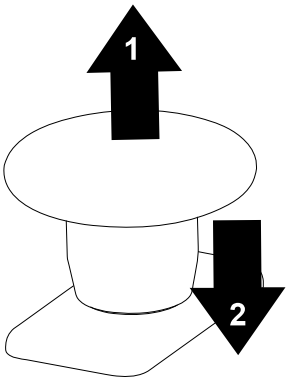

G380319

1. Pull to enable the machine.

Note: Turn the key to the OFF then ON position to continue operating the machine.

2. Push to immediately shut off the machine.

Key Switch

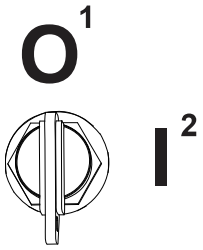

G380323

1. Turn the machine off.
2. Turn the machine on.

Light Switch

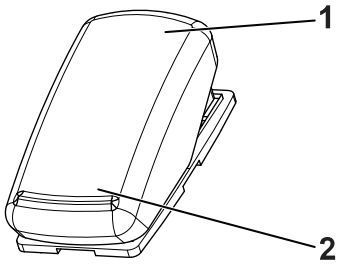

G431514

1. Off
2. On

Throttle Control

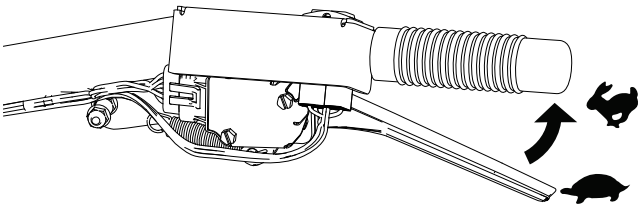
g357324

Display

Display Icon Descriptions

Icon	Description
	Menu access
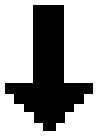	Next
	Previous
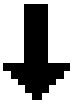	Scroll down
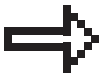	Enter
	Increase
	Decrease
	Exit menu
	Check PIN entry
	Parking brake is engaged.
	Hour meter
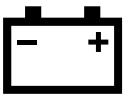	Battery voltage
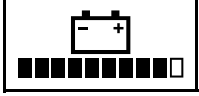	Battery charge—each solid bar represents the change in 10% increments.

Display (continued)

Display Main Menu

Menu Item	Description
Faults	A list of the recent machine faults. Refer to the Service Manual or your Authorized Service Dealer for more information on the faults menu.
Service	Machine information such as hours of use and other similar numbers.
Diagnostics	Displays the state of each machine switch, sensor, and control output. This tells you which machine controls are on and off which assists in troubleshooting.
Settings	Customize and modify configuration variables on the InfoCenter display.
About	Lists the model number, serial number, and software version.

Display Faults Menu

Menu Item	Description
Current	Lists the total number of key-on hours (i.e., hours that the key has been in the ON position).
Last	Indicates the last key-on hour that the fault occurred on.
First	Indicates the first key-on hour that the fault occurred on.
Occurrences	Indicates the number of fault occurrences.

Display Service Menu

Menu Item	Description
Hours	Lists the total number of hours that the key and motor have been on and the traction controls have been engaged.
Counts	Lists the number of times the motor has been started and the amperage hours for the battery.
Traction Pedal	Lists the steps to calibrate the traction pedal.
Steering Wheel	Lists the steps to calibrate the steering wheel.

Display (continued)

Display Diagnostics Menu

Menu Item	Description
Battery	Indicates the inputs and outputs for the battery. Inputs include the current battery voltage; outputs include the battery current and percentage state of charge.
Left Motor	Indicates the speed and current of the left motor.
Right Motor	Indicates the speed and current of the right motor.

Display Settings Menu

Menu Item	Description
Units	Indicates the inputs and outputs for the battery. Inputs include the current battery voltage; outputs include the battery current and percentage state of charge.
Language	Controls the language used on the InfoCenter.
Brightness	Controls the brightness of the LCD display.
Contrast	Controls the contrast of the LCD display.
Protected Menus	Allows you to access protected menus by inputting a passcode.

Display About Menu

Menu Item	Description
Model	Lists the model number of the machine.
Serial	Lists the serial number of the machine.
Software	Lists the part number and software revision.
Left Motor	Lists the part number and software revision of the motor controller.
Battery	Lists the part number software revision of the battery

Specifications

Note: Specifications and design are subject to change without notice.

Width (single wheel)	80.65 cm (31.75 inches)
Width (dual wheels)	106.7 cm (42 inches)
Length (with the platform up)	241.3 cm (95 inches)
Length (with the platform down)	282 cm (111 inches)
Height	139.7 cm (55 inches)
Weight	694 kg (1,530 lb)
Hopper capacity	0.40 m^3 (14 ft^3)
Maximum load	1136 kg (2,500 lb)
Wheelbase	104 cm (41 inches)
Discharge height	16.5 cm (6.5 inches)

Attachments/Accessories

A selection of Toro approved attachments and accessories is available for use with the machine to enhance and expand its capabilities. Contact your Authorized Service Dealer or authorized Toro distributor or go to www.Toro.com for a list of all approved attachments and accessories.

To ensure optimum performance and continued safety certification of the machine, use only genuine Toro replacement parts and accessories.

Before Operation

Before Operation Safety

Before Operation General Safety

- Never allow children or untrained people to operate the machine. Local regulations may restrict the age of the operator. The owner is responsible for training all operators and mechanics.
- Keep bystanders and children out of the operating area. Allow only people who are responsible, trained, familiar with the instructions, and physically capable to operate the machine.
- Become familiar with the safe operation of the equipment, operator controls, and safety signs.
- Inspect the area where you will use the machine and remove all objects that could interfere with the operation of the machine.
- Know and mark the locations of all utility lines.
- Check that the operator's presence controls, safety switches, and shields are attached and functioning properly. Do not operate the machine unless they are functioning properly.
- Locate the pinch point areas marked on the machine and keep hands and feet away from these areas.
- Before each work shift, inspect the machine components: the tires; warning devices; lights; battery; speed and directional controllers; brakes; safety interlocks; and steering mechanism. If the machine needs repair or is in any way unsafe, report it immediately and do not use the machine until it has been restored to safe operating condition.
- Identify sharp turns, blind spots, bridge approaches, and other potentially hazardous areas with a suitable warning to operators of the nature of the hazard and stating the proper precautions for them to take to avoid the hazard.
- Use only an approved machine in hazardous locations, as defined in the appropriate safety standards.
- Do not carry passengers on the machine and keep bystanders and children out of the operating area.
- Ensure that the area is clear of bystanders before operating the machine. Shut off the machine if a bystander enters the area.
- Keep away from potential hazards, such as edges of ramps and platforms.

Before Operation Safety (continued)

- Park the machine on a level surface, engage the parking brake (if applicable), and shut off the machine. Wait for all movement to stop and allow the machine to cool before adjusting, servicing, cleaning, or storing the machine.

Performing Daily Maintenance

Before starting the machine each day, perform the Each Use/Daily procedures listed in the Maintenance Schedule.

During Operation

During Operation Safety

During Operation General Safety

- The owner/user can prevent and is responsible for accidents that may cause personal injury or property damage.
- Do not exceed the rated operating capacity, as the machine may become unstable, which may result in loss of control.
- Wear appropriate clothing, including eye protection; long pants; substantial, slip-resistant footwear; and hearing protection. Tie back long hair and do not wear loose clothing or loose jewelry.
- Use your full attention while operating the machine. Do not engage in any activity that causes distractions; otherwise, injury or property damage may occur.
- Do not operate the machine while ill, tired, or under the influence of alcohol or drugs.
- Operate the machine only in good light, keeping away from holes and hidden hazards.
- Ensure that all drives are in the Neutral position before starting the machine. Start the machine only from the operating position.
- Keep your hands and feet away from moving parts. If possible, do not make adjustments with the machine running.
- Do not jerk the controls; use a steady motion.
- Use care when approaching blind corners, shrubs, trees, or other objects that may obscure your vision.
- Slow down and use caution when making turns and crossing roads and sidewalks with the machine. Always yield the right of way.
- Never leave a running machine unattended.
- Operate the machine only in appropriate weather conditions. Do not operate the machine when there is the risk of lightning.
- Be aware of obstacles in close proximity to you. Failure to maintain adequate distance from trees, walls, and other barriers may result in injury as the machine backs up during operation if you are not attentive to the surroundings.

During Operation Safety (continued)

- Check for overhead clearance (i.e., electrical wires, branches, and doorways) before driving under any objects and do not contact them.
- Do not overload the hopper and always keep the load level when operating the machine.
- Avoid operating the machine on loose terrain. Loose terrain could cause the machine to lose traction, affecting steering, stability, and braking.
- Do not operate the vehicle in a dangerous manner, such as stunt driving or horseplay.
- Do not deliberately drive the machine over loose objects, potholes, or bumps.
- Observe all traffic regulations, including authorized speed limits. Under normal traffic conditions, keep to the right. Maintain a safe distance, based on speed of travel, from a machine or vehicle ahead; and keep the machine under control at all times.
- Park the machine on a level surface, lower the hopper, shut off the machine, and remove the key before leaving the operating position.
- Report all accidents involving personnel, building structures, and equipment.
- If during the machine becomes unsafe to use in any way, report it immediately. Do not use the machine until it has been restored to safe operating condition.

Slope Safety

- Slopes are a major factor related to loss-of-control and tip-over accidents, which can result in severe injury or death. You are responsible for safe slope operation. Operating the machine on any slope requires extra caution. Before using the machine on a slope, do the following:
  - Review and understand the slope instructions in the manual and on the machine.
  - Evaluate the site conditions of the day to determine if the slope is safe for machine operation. Always use common sense and good judgment when performing this evaluation. Changes in the terrain, such as moisture, can quickly affect the operation of the machine on a slope.
- Raising the hopper on a slope affects the stability of the machine. Keep the hopper in the lowered and straight position when on slopes.
- Identify hazards at the base of the slope. Do not operate the machine near drop-offs, ditches, embankments, water or other hazards. The machine could suddenly roll over if a wheel or track goes over the edge or the edge collapses. Keep a safe distance (twice the width of the machine) between the machine and any hazard.
- Avoid starting, stopping, or turning the machine on a slope. Avoid making sudden changes in speed or direction; turn slowly and gradually.
- Keep all movements on slopes slow and gradual. Do not make sudden changes in speed or direction.
- Do not operate the machine under any conditions where traction, steering, or stability is in question. Be aware that operating the machine on wet grass, across slopes or downhill may cause the machine to lose traction. Loss of traction to the wheels or tracks may result in sliding and a loss of braking and steering. The machine can slide even if the wheels or tracks are stopped.
- Remove or mark obstacles such as ditches, holes, ruts, bumps, rocks or other hidden hazards. Tall grass can hide obstacles. Uneven terrain could overturn the machine.

During Operation Safety (continued)

- If you lose control of the machine, step off and away from the direction of travel of the machine.

Starting the Machine

1. Ensure that the battery-disconnect switch is in the ON position.
2. Stand on the platform.
3. Insert the key into the key switch and turn it to the ON position.

   Note: The machine may have difficulty starting under severe cold conditions. When starting a cold machine, keep the machine above -7°C (20°F).

Shutting off the Machine

1. Park the machine on a level surface.
2. Put the drive controls in the NEUTRAL position.
3. Turn the key switch to the OFF position and remove the key.

Operating the Machine

1. Step onto the machine.

⚠ CAUTION ⚠

When mounting the machine, slippery or uneven ground may cause you to fall.

Always have 3 out of 4 arms/legs in contact with the machine when you mount or dismount the machine.

---

2. Turn the key to the ON position.

3. Move the switch in the desired direction:
   - Forward (1)—push the top of the switch.
   - Backward (3)—push the bottom of the switch.

   Note: Toggle the switch back to Neutral if it is in the forward or backward position when turning the machine on.

   The more you squeeze the handle, the faster the machine travels.

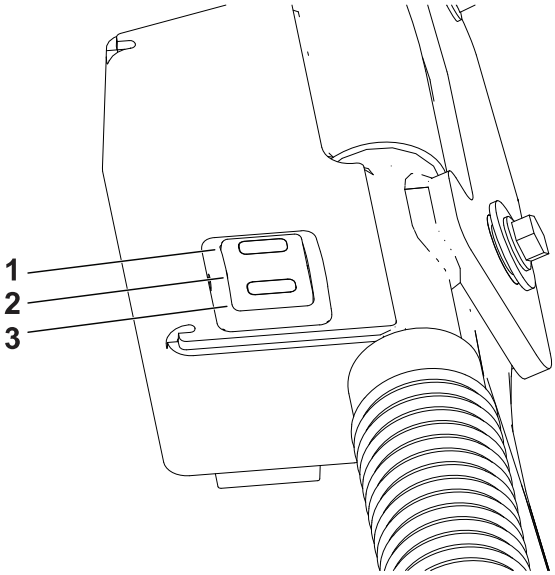

G380320

4. Release the speed control handle to stop the machine.
5. Put the drive controls in the NEUTRAL (2) position and turn the key switch to the OFF position.

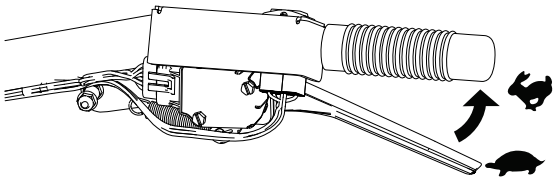
G380322

Operator Platform

You can use the machine with the platform in the up or down position.

⚠ WARNING ⚠

The operator platform is heavy and may cause injury when you raise or lower it. Carefully lower or raise the operator platform, as suddenly dropping it could injure you.

- **Do not put your hands or fingers in the platform-pivot area when lowering or raising the operator platform.**
- **Make sure that the platform is supported when you pull the latch pin out.**
- **Make sure that the latch secures the platform when folding it up. Push it tight against the cushion for the latch pin to lock into place.**
- **Keep bystanders away from the machine when raising or lowering the platform.**

Operate the machine with the platform up for the following conditions:

- Using the machine near drop-offs
- Using the machine in small areas where the machine is too large
- Areas with low-hanging branches or obstacles

Operator Platform (continued)

- When loading or unloading the machine from a trailer for transport
- Driving up slopes

Operate the machine with the platform down for the following conditions:

- Using the machine in most areas
- Driving across slopes
- Driving down slopes

Raising the Platform

Rotate the platform up until it locks into position.

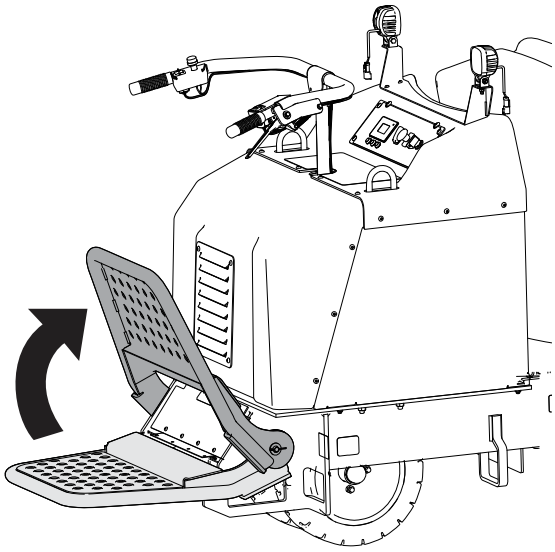

G380478

Lowering the Platform

1. Push the platform forward to release pressure on the latch pin.
2. Pull the latch pin out and lower the platform.

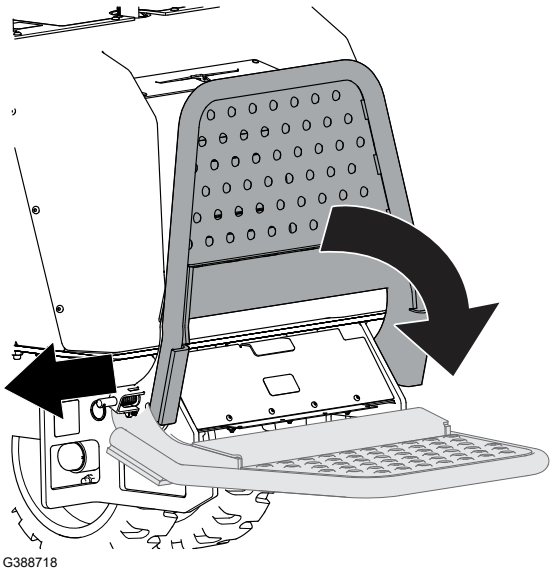

G388718

Operating the Hopper

IMPORTANT

Do not exceed the load capacity of the machine.

1. Position the machine where you intend to dump the load.
2. Dump the hopper by pushing the switch forward ①.
3. Lower the hopper by pulling the switch rearward ②.

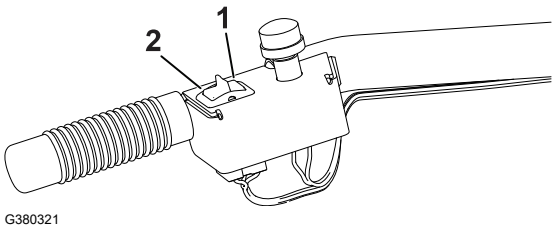

G380321

Note: Pull the switch rearward twice to engage auto-return.

To stop the automatic movement, push on the hopper switch in any direction.

After Operation

After Operation Safety

After Operation General Safety

- Engage the parking brake (if applicable), shut off the machine, remove the key, and wait for all movement to stop before adjusting, cleaning, or repairing the machine.
- Do not touch parts that may be hot from operation. Allow them to cool before attempting to maintain, adjust, or service the machine.
- Clean debris from drives and the motor to help prevent fires.

Battery and Charger Safety

- **WARNING**: Risk of fire and electric shock—The batteries have no user-serviceable parts.
- Confirm the voltage that is available in your country before using the charger.
- Do not get the charger wet; keep it protected from rain and snow.
- A risk of fire, electric shock, or injury may result from using an accessory not recommended or sold by Toro.
- To reduce risk of a battery explosion, follow these instructions and the instructions for any equipment that you intend to use near the charger.
- Batteries could emit explosive gasses if they are significantly overcharged.
- Refer to an Authorized Service Dealer to service or replace a battery.
- Never allow children or untrained people to operate or service the charger. Local regulations may restrict the age of the operator. The owner is responsible for training all operators and mechanics.

After Operation Safety (continued)

- Never allow children or untrained people to operate or service the charger. Local regulations may restrict the age of the operator. The owner is responsible for training all operators and mechanics.
- Keep bystanders and children away while charging.
- Wear appropriate clothing while charging, including eye protection; long pants; and substantial, slip-resistant footwear.
- Shut off the machine and wait until the machine has completely powered down before charging. Failure to do this may cause arcing.
- Ensure that the area is well ventilated while charging.
- The charger is for use on only nominal 120 to 240 VAC operation. For use with 240 V circuits, contact your Authorized Service Dealer for the correct power cord.
- Do not charge a frozen battery.
- Do not abuse the cord. Do not yank on the power supply cord to disconnect the charger from the receptacle. Keep the cord from heat, oil, and sharp edges.
- Connect the charger directly to a grounding receptacle. Do not use the charger on an ungrounded outlet, even with a grounding adapter.
- Do not alter the provided power cord or plug.
- Remove metal items such as rings, bracelets, necklaces, and watches when working with a lithium-ion battery. A lithium-ion battery can produce enough current to cause a severe burn.
- Never operate the charger without good visibility or light.
- Use an extension cord capable of handling 15 A or more. If you are charging outdoors, use an extension cord rated for outdoor use.
- If the power supply cord is damaged while it is plugged in, disconnect the cord from the wall receptacle and contact an Authorized Service Dealer for a replacement.
- Unplug the charger from the electrical outlet when not in use, before moving it to another location, or prior to servicing it.
- Do not disassemble the charger. Take the charger to an Authorized Service Dealer when service or repair is required.
- Unplug the power cord from the outlet before starting any maintenance or cleaning to reduce risk of electric shock.
- Maintain or replace safety and instruction labels as needed.
- Do not operate the charger with a damaged cord or plug. Contact an Authorized Service Dealer to obtain a replacement cord.
- If the charger has received an impact, been dropped, or otherwise damaged, do not use it; take it to an Authorized Service Dealer.

Lowering the Hopper without Power

1. Install the cylinder lock.

Lowering the Hopper without Power (continued)

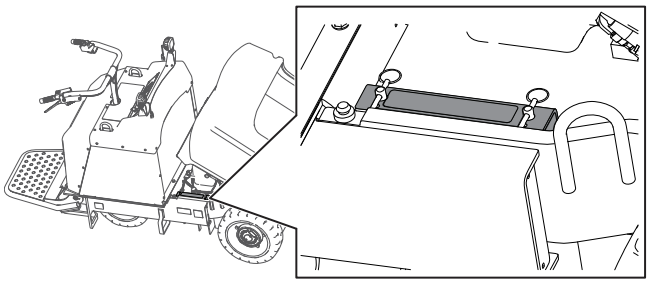

G380311

2. Ensure that the hopper is empty.
3. Remove the bottom cover and place a large drain pan under the hydraulic power unit.
4. Remove the caps off of the hoses to the lift cylinder and allow the fluid to drain.

   Note: Dispose of the used fluid at a certified recycling center.
5. Use a hoist or have 2 people hold up the hopper and remove and store the cylinder lock.
6. Carefully lower the hopper.
7. Install the caps on the hydraulic hoses to prevent contamination.
8. After making repairs, raise the hopper, install the cylinder lock, and attach the hoses to the power unit and install the bottom cover.
9. Add hydraulic fluid.

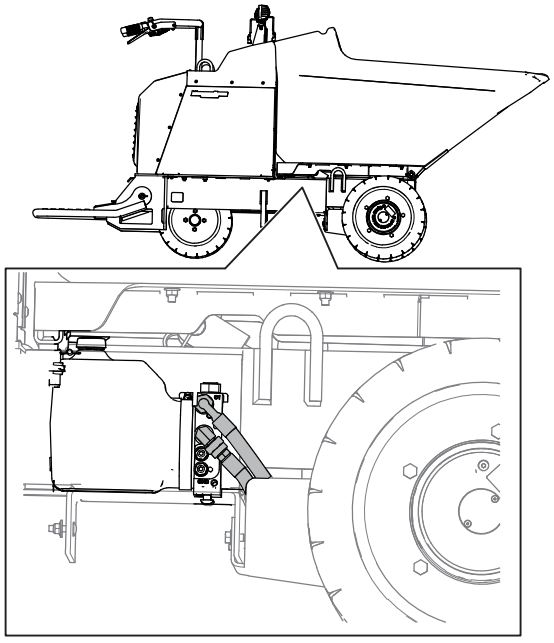

G387430

Raising the Hopper without Power

1. Remove any material from the hopper.
2. Raise the machine and support it using jack stands rated for the weight of the machine.
3. Remove the access panel.
4. Place a large drain pan under the hydraulic power unt.

Raising the Hopper without Power (continued)

5. Disconnect the hose fittings and allow the fluid to drain into the pan.

   Note: Dispose of the used fluid at a certified recycling center.
6. Install the caps on the hydraulic hoses to prevent contamination.
7. Use a hoist or have 2 people hold up the hopper and install the cylinder lock.
8. After making repairs, install the hoses.
9. Add hydraulic fluid.
10. Remove and store the cylinder lock.

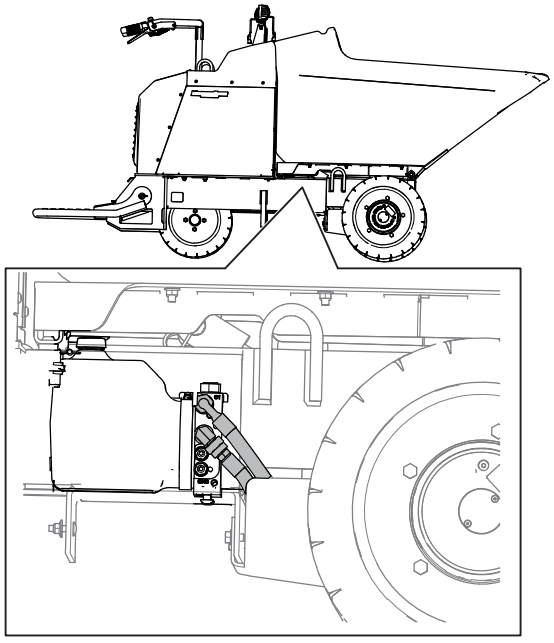

G387430

Haul the Machine

Use a heavy-duty trailer or truck to haul the machine. Use a full-width ramp. Ensure that the trailer or truck has all the necessary brakes, lighting, and marking as required by law. Please carefully read all the safety instructions. Knowing this information could help you or bystanders avoid injury. Refer to your local ordinances for trailer and tie-down requirements.

⚠ WARNING ⚠

Driving on the street or roadway without turn signals, lights, reflective markings, or a slow-moving-vehicle emblem is dangerous and can lead to accidents causing personal injury.

Do not drive the machine on a public street or roadway.

Haul the Machine (continued)

Selecting a Trailer

WARNING

Loading a machine onto a trailer or truck increases the possibility of tip-over and could cause serious injury or death.

- **Use only full-width ramps.**
- **Ensure that the length of ramp is at least 4 times as long as the height of the trailer or truck bed to the ground. This ensures that ramp angle does not exceed 15 degrees on flat ground.**

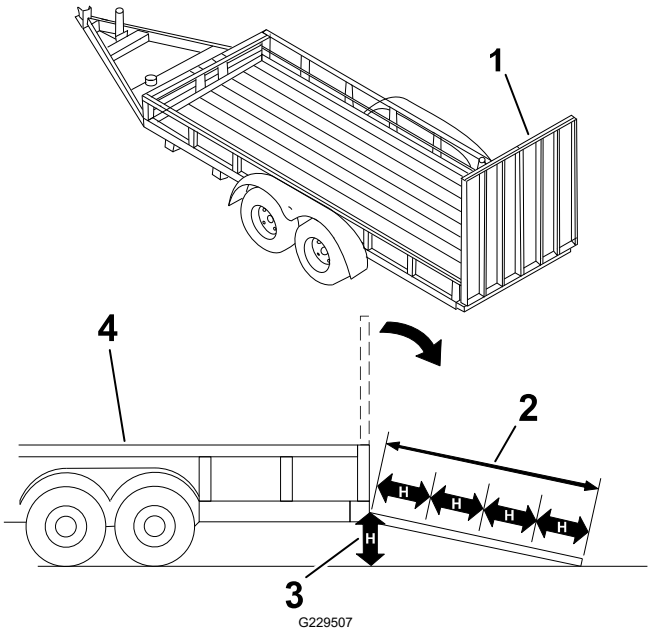

(1) Full-width ramp in stowed position

(2) Ramp is at least 4 times as long as the height of the trailer or truck bed to the ground

(3) H = height of the trailer or truck bed to the ground

(4) Trailer

Loading the Machine

WARNING

Loading a machine onto a trailer or truck increases the possibility of tip-over and could cause serious injury or death.

- **Use extreme caution when operating a machine on a ramp.**
- **Load and unload the machine with the heavy end up the ramp.**
- **Avoid sudden acceleration or deceleration while driving the machine on a ramp as this could cause a loss of control or a tip-over situation.**

Haul the Machine (continued)

IMPORTANT

Ensure that the hopper is empty before loading the machine onto a truck or trailer.

1. If using a trailer, connect it to the towing vehicle and connect the safety chains.
2. If applicable, connect the trailer brakes.
3. Lower the ramp(s).
4. Back the machine up the trailer ramp.
5. Shut off the machine.
6. Raise the operator platform.
7. Use the metal tie-down loops to securely fasten the machine to the trailer or truck with straps, chains, cable, or ropes. Refer to local regulations for tie-down requirements.

IMPORTANT

Do not use the tie-down loops to lift the machine.

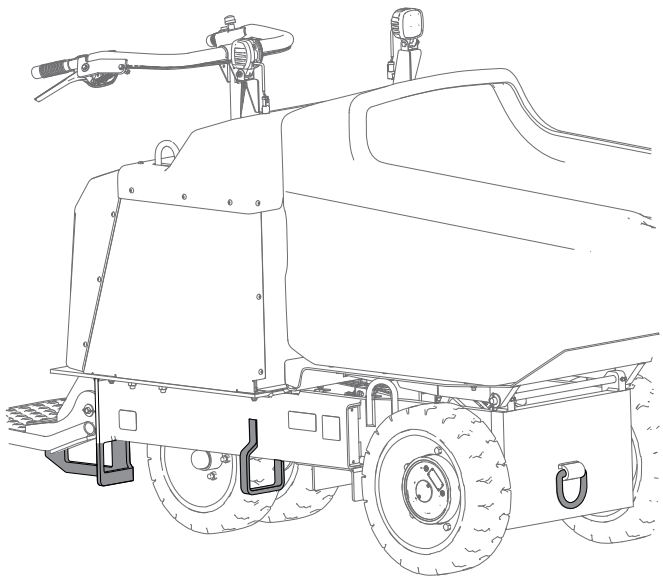

G388893

Unloading the Machine

1. Lower the ramp(s).
2. Lower the operator platform.
3. Drive the machine forward down the ramp.

Note: Determine the left and right sides of the machine from the normal operating position.

Maintenance Safety

- Park the machine on a level surface, engage the parking brake (if applicable), shut off the machine, and remove the key. Wait for all movement to stop and allow the machine to cool before adjusting, servicing, cleaning, or storing the machine.
- Do not make repairs or adjustments on the machine unless you are specifically trained and authorized to do so.
- Support the machine with jack stands whenever you work under the machine.
- Carefully release pressure from components with stored energy.
- Use the cylinder lock to secure the hopper in the raised position.
- Never tamper with safety devices.
- To ensure safe, optimal performance of the machine, use only genuine Toro replacement parts.
- Seek immediate medical attention if fluid is injected into skin. Injected fluid must be surgically removed within a few hours by a doctor.
- Ensure that all hydraulic-fluid hoses and lines are in good condition and all hydraulic connections and fittings are tight before applying pressure to the hydraulic system. Keep your body and hands away from pinhole leaks or nozzles that eject high-pressure hydraulic fluid.
- Use cardboard or paper to find hydraulic leaks.
- Safely relieve all pressure in the hydraulic system before performing any work on the hydraulic system.
- Modifying this machine in any manner may affect machine operation, performance, durability, or its use, and result in injury or death.
- Contain hazardous material spills immediately according to hazardous materials regulations.
- After performing maintenance on the machine, check its performance in an authorized area away from vehicular and pedestrian traffic.
- Before returning the machine to service, follow the recommended procedures.
- Regularly inspect a machine designed and approved for use in hazardous areas to ensure that it has its original and approved safe-operating features.
- Maintain and keep all plates, tags, and decals with capacity, operation, and maintenance information in legible condition.
- Inspect and maintain the battery, motor, controllers, switches, safety protective devices, electrical wiring, and connections according to the instructions.

- Keep the machine clean to minimize hazards and make inspecting the machine for servicing easier.
- Ensure that the extension cord plugs are in good condition and are not hot from operation. Do not use a damaged or worn extension cord.

Recommended Maintenance Schedule

Maintenance Service Interval	Maintenance Procedure	Part No.	Qty	Description
After the first 50 hours	Changing the Drive-Motor Gear Oil	144-6880	1	Gear oil
Before each use or daily	Check the hydraulic fluid level.	-	-	-
	Removing Debris	-	-	-
	Check for loose fasteners.	-	-	-
Every 40 hours	Checking the Anti-Static Strap	139-7731	1	Anti-static strap
	Check the condition of the tires.	-	-	-
	Check the lug nuts.	-	-	-
	Check the hydraulic lines.	-	-	-
Every 50 hours	Grease and oil the machine.	-	-	-
Every 500 hours	Changing the Drive-Motor Gear Oil	144-6880	1	Gear oil
	Change the hydraulic fluid.	505-136	1	Hydraulic fluid
Every 1,500 hours	Replace all moving hydraulic hoses.	144-1736	1	Hydraulic hose
		144-1737	1	Hydraulic hose
Yearly or before storage	Touch up chipped paint.	361-9	1	Paint
		361-10	1	Paint
	Changing the Hydraulic Fluid	505-136	1	Hydraulic fluid

Pre-Maintenance Procedures

Retrieving a Machine

In an emergency, you can push or tow the machine.

Note: Do not tow the machine on a slope; the wheels will spin freely when you remove the gear.

1. Chock the wheels.
2. Remove the gearbox cover.

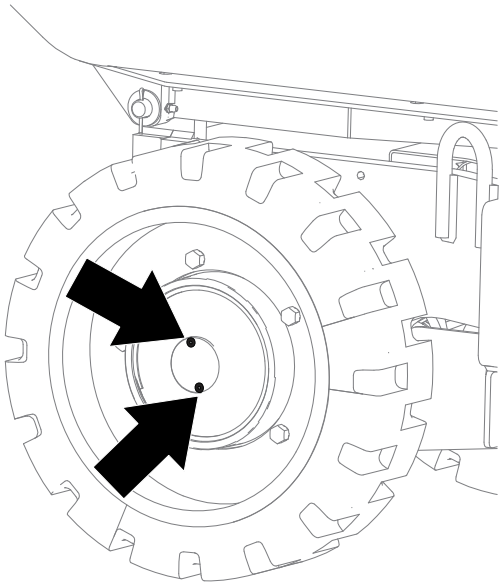

G388719

3. Remove the gear from the gearbox.
4. Install the gearbox cover to prevent contamination.
5. Tow the machine as required using the tie down locations.
6. Remove the gearbox cover.
7. Clean and install the gear in the gearbox and install the gearbox cover.

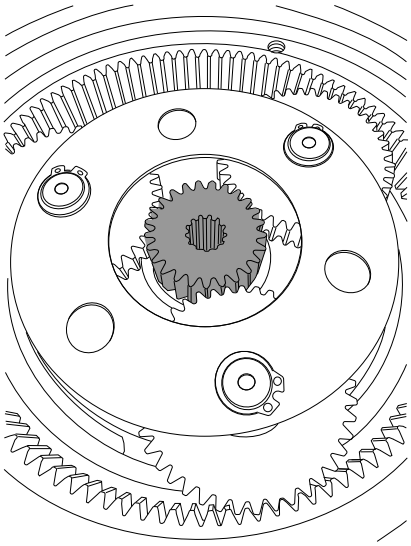

G390816

Lifting the Machine

Lifting the Machine with a Forklift

IMPORTANT

Ensure that the hopper is empty before lifting the machine.

1. Place the platform in the raised position.
2. Lift the machine using the side or rear pockets.

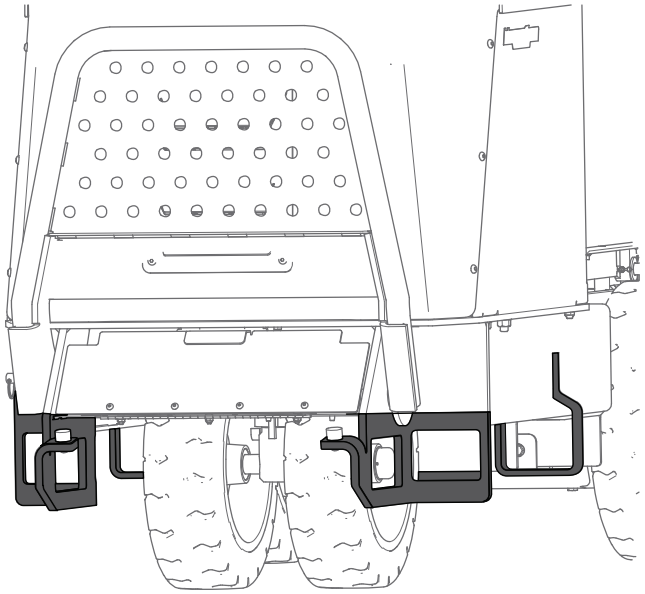

G380480

Lifting the Machine with a Hoist

IMPORTANT

Ensure that the hopper is empty before lifting the machine.

1. Place the platform in the raised position.
2. Place the hopper in the dump position.
3. Install the cylinder lock.
4. Attach a chain or straps to each of the lift points.
5. Remove any slack in the chains or straps to ensure that the machine is properly balanced.

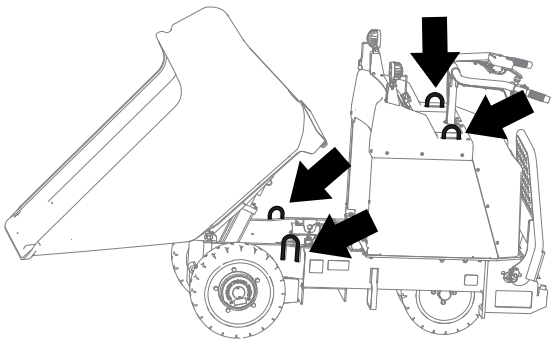

G380479

Using the Cylinder Lock

Installing the Cylinder Lock

1. Park the machine on a level surface, move the motion-control levers to the NEUTRAL-LOCK position, and fully raise the hopper.
2. Remove the 2 cotterless pins securing the cylinder lock to the machine.

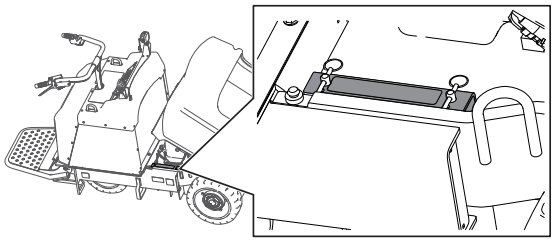

G380311

3. Slide the cylinder lock over the lift-cylinder rod and secure with the cotterless pins.

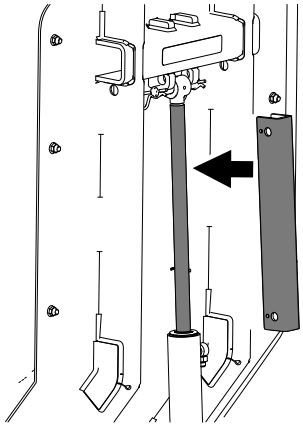

G324856

Removing and Storing the Cylinder Lock

IMPORTANT

Remove the cylinder lock from the lift-cylinder rod and fully secure it in the storage position before operating the machine.

1. Start the machine.
2. Fully raise the hopper.
3. Shut off the machine.
4. Remove the cotterless pins securing the cylinder lock.
5. Place the cylinder lock on the posts inside the machine frame and secure with the cotterless pins.
6. Lower the hopper.

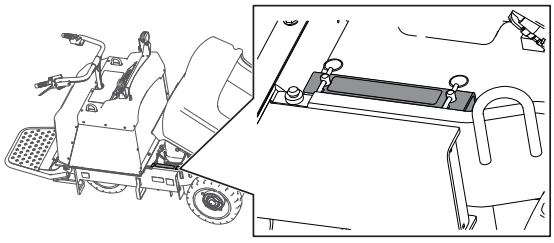

G380311

Lubrication

Greasing the Machine

Grease Type: General-purpose grease.

Note: Remove the blue protection caps, if applicable, before greasing and replace when finished.

1. Park the machine on a level surface.
2. Shut off the machine.
3. Clean the grease fittings with a rag.
4. Connect a grease gun to each fitting.

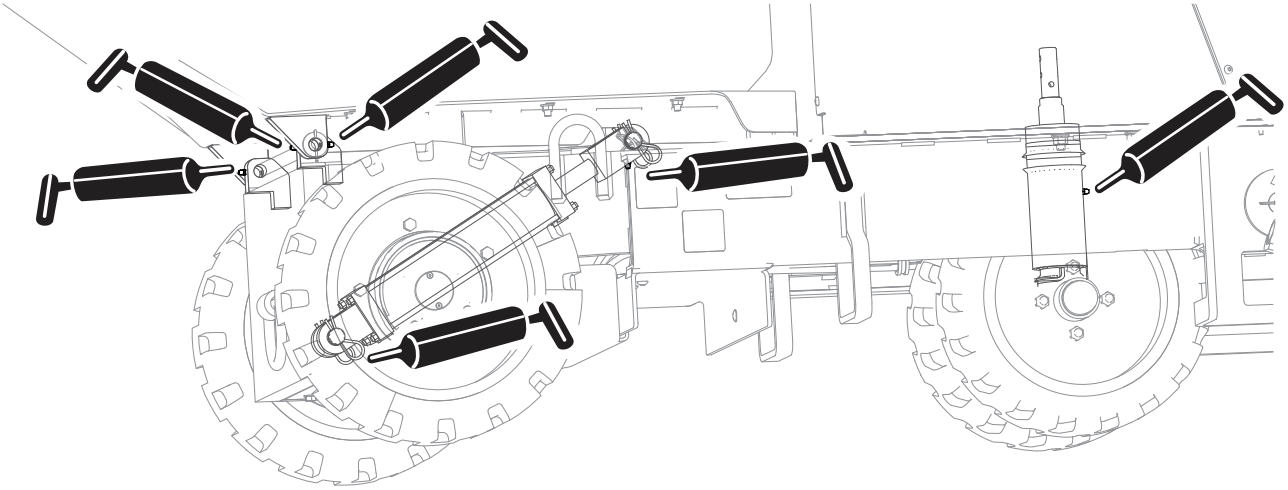

G387212

5. Pump grease into the fittings until grease begins to ooze out of the fittings (approximately 3 pumps).
6. Wipe up any excess grease.

Electrical System Maintenance

Checking the Anti-Static Strap

1. Park the machine on a level surface, lower the hopper, shut off the machine, and remove the key.
2. Check the anti-static strap and replace it if it is worn or missing.

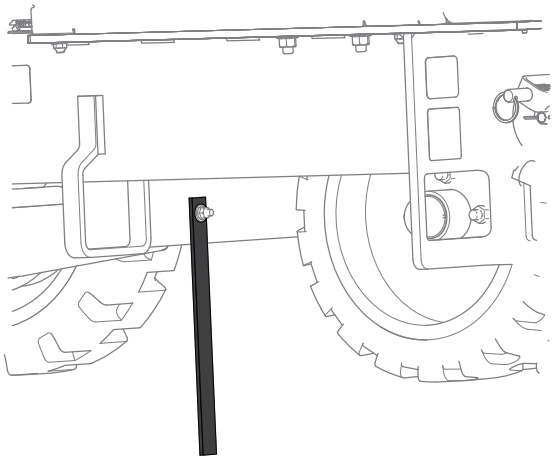

G388771

Battery Service

Note: The machine is equipped with 3 lithium-ion batteries.

Dispose of or recycle lithium-ion batteries in accordance with local and federal regulations. If a battery requires service, contact your Authorized Service Dealer for assistance.

The only user serviceable parts on a battery are the labels. If you are having problems with a battery, contact your Authorized Service Dealer for assistance.

Battery Maintenance

⚠ WARNING ⚠

The batteries contain high voltage, which could burn or shock you.

- **Do not attempt to open the batteries.**
- **Use extreme care when handling a battery with a cracked case.**
- **Use only the charger designed for the batteries.**

The lithium-ion batteries hold a sufficient charge to perform intended work during its life span.

To achieve maximum life and use from your batteries, follow these guidelines:

- Do not open the battery.
- Store/park the machine in a clean, dry garage or storage area, away from direct sunlight, heat sources, rain, and wet conditions. Do not store it in a location where the

temperature exceeds the range specified in the Battery Storage Requirements, page 6–1.

IMPORTANT

Temperatures outside of this range will damage your batteries. High temperatures during storage, especially at a high state of charge, reduces the life of the batteries.

- When storing the machine for more than 10 days, ensure that the machine is in a cool and dry location, out of sunlight, rain, and wet conditions.
- If you are using the machine in hot conditions or in strong, direct sunlight, the batteries may overheat. If this happens, a high-temperature alert will appear on the display and the machine will slow down.

  Immediately drive the machine to a cool location out of the sun, turn off the machine, and allow the batteries to cool fully before resuming operation.

Charging the Batteries

⚠ DANGER ⚠

Contact with water while charging the machine could cause electric shock, causing injury or death.

- **Do not handle the plug with wet hands or while standing in water.**
- **Do not charge the batteries in the rain or in wet conditions.**

⚠ WARNING ⚠

A damaged charger cord can cause an electrical shock or a fire.

Thoroughly inspect the charger cord before charging the machine. If the cord is damaged, do not charge the machine until you obtain a replacement.

To reduce the risk of electric shock, this charger has a 3-prong grounded plug (type B). If the plug does not fit into the wall receptacle, other grounded plug types are available; contact an Authorized Service Dealer.

Do not change the charger plug in any way.

IMPORTANT

Check the charger cord periodically for holes or cracks in the insulation. Do not use a damaged cord. Do not run the cord through standing water or wet grass.

IMPORTANT

Charge the machine in temperatures ranging from 0° to 45°C (32° to 113°F).

The onboard charger will not function in temperatures outside of this range.

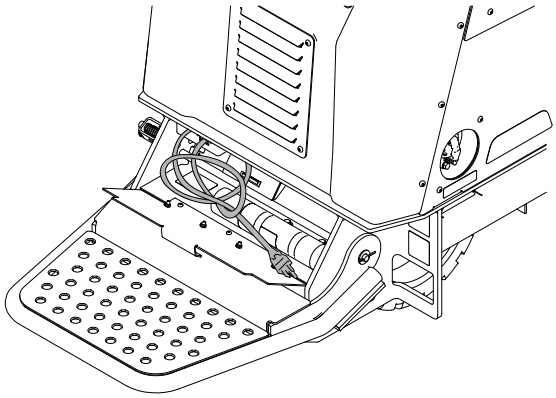

G387189

1. Park the machine in the designated location for charging.
2. Shut off the machine and remove the key.
3. Ensure that the electrical service disconnect switch is in the ON position.
4. Open the cover for the charger cord storage.
5. Insert the charger plug into a grounded electrical outlet.
6. Observe the display to ensure that the batteries are charging.
7. When the machine reaches a sufficient level, disconnect the charger cord from the outlet.
8. Store the charger cord in the storage and close the cover.
9. Start the machine and verify the charge level using the display.

Battery Service (continued)

Charger Maintenance

IMPORTANT

All electrical repairs should be performed by an Authorized Service Dealer only.

The charger requires little maintenance other than protecting it from damage and weather.

- Clean the charger cord with a slightly damp cloth after each use.
- Coil the cord when not in use.
- Periodically examine the cord for damage, and replace it when necessary with Toro-approved parts.

Drive System Maintenance

Inspecting the Tires

Inspect tires for cuts, slashes, or bulges. Tires with defects need to be replaced or repaired for proper handling and safety.

Torquing the Wheel Lug Nuts

Torque the lug nuts in a crossing pattern.



1. Torque the front lug nuts to **95 to 122 N·m (70 to 90 ft-lb)**.
2. Torque the rear lug nuts to **103 to 123 N·m (76 to 91 ft-lb)**.

Drive-Motor Gear Oil Specifications

Oil Type	Mobil 626 SHC
Capacity	295.7 ml (10 fl oz) per gearbox

Changing the Drive-Motor Gear Oil

1. Start the machine and drive it for 5 minutes.

   Note: This warms the gear oil so that it drains better.
2. Park the machine on a level surface so that a drain plug on the front motor is in the **6 o'clock** position.
3. Shut off the machine and remove the key.
4. Place a drain pan under the drive motor.
5. Remove both plugs and allow the gear oil to drain.
6. Install the lower plug.

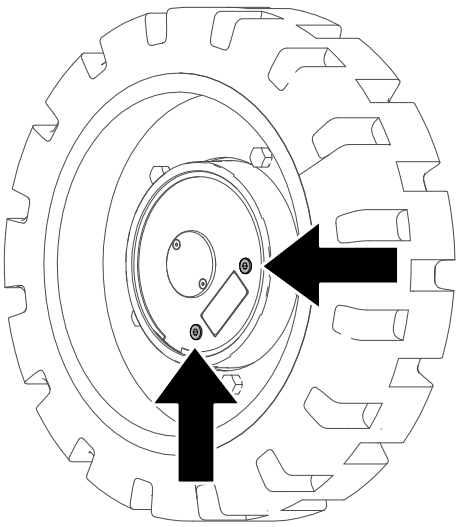

G387302

7. Fill the drive motor with gear oil through the open hole until the oil is up to the bottom of the hole.
8. Install the plug.
9. Repeat the procedure for the other drive motor.
10. Start the machine and drive it for a few minutes.
11. Park the machine on a level surface so that a drain plug is in the **3 o'clock** position, shut off the machine, and remove the key.
12. Remove the plug in the 3 o'clock position and verify that the oil level is at the bottom of the oil-level check hole. Add oil as needed.

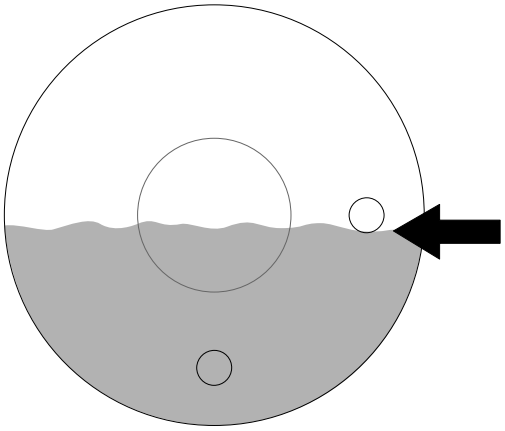

G387301

13. Install the plug and torque plugs to **5 to 6 N·m (50 to 60 in-lb)**

Hydraulic System Maintenance

Hydraulic Fluid Specifications

Hydraulic-Fluid type	Mobil ATF Dexron
Hydraulic fluid capacity	3.03 L (3.2 US qt)

The machine hydraulic tank is filled at the factory with approximately 3.03 L (3.2 US qt) of hydraulic fluid.

Checking the Hydraulic Lines

Check the hydraulic lines for leaks, loose fittings, kinked lines, loose mounting supports, wear, and deterioration. Make necessary repairs before operating.

Changing the Hydraulic Fluid

⚠ CAUTION ⚠

The hydraulic breather/filler cap is designed to pressurize the reservoir to 34 kPa (5 psi).

Loosen the cap slowly to avoid injury whenever adding oil or working on the hydraulic system.

1. Park the machine on a level surface and shut off the machine.
2. Remove the access panel.
3. Slowly loosen the hydraulic tank cap.
4. Place a large drain pan under the drain plug located at the bottom of the hydraulic tank.
5. Remove the drain plug and allow the oil to drain into the pan.
6. Install and tighten the drain plug.

   Note: Dispose of the used oil at a certified recycling center.

7. Torque drain plug to **1.1 to 1.4 N·m (10 to 12 in-lb)**.
8. Install the access panel.

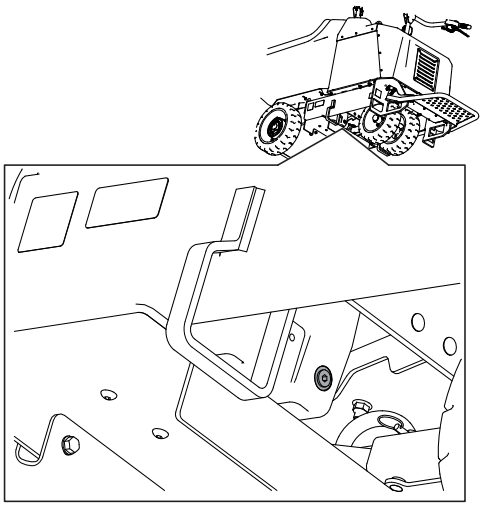

G387429

Changing the Hydraulic Fluid (continued)

9. Fill the hydraulic tank with the specified fluid.
10. Install the cap.

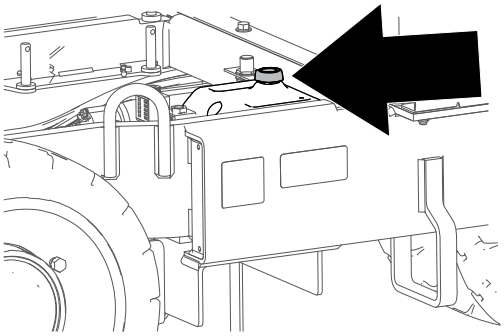

G426593

Cleaning

Removing Debris

1. Park the machine on a level surface, shut off the machine, and remove the key.
2. Clean any debris from the machine.

IMPORTANT

Blow the dirt out rather than wash it out. If you use water, keep it away from electrical items and hydraulic valves.

Clean electrical connectors using compressed air; do not use contact cleaner.

Washing the Machine

When pressure-washing the machine, do the following:

- Wear appropriate personal protective equipment for the pressure washer.
- Keep all guards in place on the machine.
- Avoid spraying at electronic components.
- Avoid spraying at edges of decals.
- Spray the exterior of the machine only. Do not spray directly into openings in the machine.
- Spray only the dirty parts of the machine.
- Use a 40-degree or larger spray nozzle. 40-degree nozzles are usually white.
- Keep the tip of the pressure washer at least 61 cm (2 ft) away from the surface being washed.
- Use only pressure washers with pressure below 13790 kpa (2000 psi) and flow below 7.6 L (2 US gallons) per minute.

Washing the Machine (continued)

- Replace damaged or peeling decals.
- Grease all grease points after washing.

Storage Safety

Park the machine on a level surface, engage the parking brake (if applicable), shut off the machine, and remove the key. Wait for all movement to stop and allow the machine to cool before adjusting, servicing, cleaning, or storing the machine.

Preparing the Machine for Storage Over 30 Days

1. Park the machine on a level surface and lower the hopper.
2. Shut off the machine and remove the key.
3. Remove dirt and grime from the entire machine.
4. Grease the machine.
5. Check and tighten all fasteners. Repair or replace any worn, damaged, or missing parts.
6. Paint all scratched or bare metal surfaces with paint available from your Authorized Service Dealer.
7. Store the machine in a clean, dry garage or storage area. Remove the key and keep it in a memorable place.
8. Cover the machine to protect it and keep it clean.

Battery Storage Requirements

Note: You do not need to remove the batteries from the machine for storage.

Temperature Limits for Storage

Storage Temperature	Appropriate Storage Time
45° to 55°C (113° to 131°F)	1 week
25° to 45°C (77° to 113°F)	3 weeks
-20° to 25°C (-4° to 77°F)	52 weeks

IMPORTANT

Temperatures outside of these ranges will damage your batteries.

The temperature that the batteries are stored at will affect their long-term life. Storage for long periods of time at extreme temperatures will reduce the battery life. For temperatures above 25°C (77°F), only store the machine for the appropriate amount of time indicated in the table.

- Before you store the machine, charge or discharge the batteries to between 40% and 60% (54.3V and 57.3V).

  Note: A 50% charge is optimal to ensure a maximum battery life. When the batteries are charged to 100% before storage, the battery life shortens.

  If you anticipate that the machine will be stored for a longer period of time, charge the batteries to around 60%.
- For every 6 months of storage, check the battery-charge level and ensure that it is between 40% to 60%. If the charge is below 40%, charge the batteries between 40% to 60%.
- You can use a multimeter to check the charge level when the machine is off. Refer to the following table for the amount of voltage that is equal to the charge level:

Voltage	Charge Level
54.3V	40%
55.4V	50%
57.3V	60%

- After charging the batteries, disconnect the charger plug from power during storage to minimize the discharging of the batteries.
- The machine and charger will shut off after the batteries are fully charged and does not turn back on unless the charger cord is disconnected and reconnected.

The machine does not drive.

Possible Cause	Corrective Action
The machine has been inactive for more than 30 seconds and is in sleep mode.	Set the drive control in the NEUTRAL position and back to the preferred direction.
One or more of the electrical connections are loose.	Check and tighten any loose connections.

The machine does not start.

Possible Cause	Corrective Action
The batteries need to be charged.	1. Check the InfoCenter for the battery status. 2. Charge the machine.
The electrical service disconnect switch is in the OFF position.	Turn the electrical service disconnect switch to the ON position.
The emergency stop switch is engaged.	Disengage the emergency stop switch.

The machine batteries do not charge.

Possible Cause	Corrective Action
The electrical service disconnect switch is in the OFF position.	Turn the electrical service disconnect switch to the ON position.
The charging cord plug is not fully plugged in.	Ensure that both sides of the charging cord is fully plugged in.
The charger is bad.	Contact your Authorized Service Dealer.

The throttle is not working properly.

Possible Cause	Corrective Action
The throttle needs to be calibrated.	Calibrate the throttle.

The steering is not working properly.

Possible Cause	Corrective Action
The steering needs to be calibrated.	Use the display to calibrate the steering system.
The steering linkage needs to be adjusted.	Check the steering linkage assembly for loose or missing hardware.

The hopper is not functioning properly.

Possible Cause	Corrective Action
The hydraulic fluid is low.	Check the hydraulic fluid.
There is air in the hydraulic system.	Bleed the air out of the hydraulic system.
The sensor is not working.	1. Adjust the sensor to 8 mm (3/4 inch) above the mounting bracket. 2. Check if the sensor has gone bad.
The switch is loose or disconnected.	1. Check the electric connections. 2. The switch has gone bad. Contact your Authorized Service Dealer.
The hydraulic system is damaged.	Contact your Authorized Service Dealer.

California Proposition 65 Warning Information

What is this warning?

You may see a product for sale that has a warning label like the following:



WARNING: Cancer and Reproductive Harm—www.p65Warnings.ca.gov.

What is Prop 65?

Prop 65 applies to any company operating in California, selling products in California, or manufacturing products that may be sold in or brought into California. It mandates that the Governor of California maintain and publish a list of chemicals known to cause cancer, birth defects, and/or other reproductive harm. The list, which is updated annually, includes hundreds of chemicals found in many everyday items. The purpose of Prop 65 is to inform the public about exposure to these chemicals.

Prop 65 does not ban the sale of products containing these chemicals but instead requires warnings on any product, product packaging, or literature with the product. Moreover, a Prop 65 warning does not mean that a product is in violation of any product safety standards or requirements. In fact, the California government has clarified that a Prop 65 warning “is not the same as a regulatory decision that a product is ‘safe’ or ‘unsafe.’” Many of these chemicals have been used in everyday products for years without documented harm. For more information, go to https://oag.ca.gov/prop65/faqs-view-all.

A Prop 65 warning means that a company has either (1) evaluated the exposure and has concluded that it exceeds the “no significant risk level”; or (2) has chosen to provide a warning based on its understanding about the presence of a listed chemical without attempting to evaluate the exposure.

Does this law apply everywhere?

Prop 65 warnings are required under California law only. These warnings are seen throughout California in a wide range of settings, including but not limited to restaurants, grocery stores, hotels, schools, and hospitals, and on a wide variety of products. Additionally, some online and mail order retailers provide Prop 65 warnings on their websites or in catalogs.

How do the California warnings compare to federal limits?

Prop 65 standards are often more stringent than federal and international standards. There are various substances that require a Prop 65 warning at levels that are far lower than federal action limits. For example, the Prop 65 standard for warnings for lead is 0.5 µg/day, which is well below the federal and international standards.

Why don’t all similar products carry the warning?

- Products sold in California require Prop 65 labelling while similar products sold elsewhere do not.
- A company involved in a Prop 65 lawsuit reaching a settlement may be required to use Prop 65 warnings for its products, but other companies making similar products may have no such requirement.
- The enforcement of Prop 65 is inconsistent.
- Companies may elect not to provide warnings because they conclude that they are not required to do so under Prop 65; a lack of warnings for a product does not mean that the product is free of listed chemicals at similar levels.

Why does Toro include this warning?

Toro has chosen to provide consumers with as much information as possible so that they can make informed decisions about the products they buy and use. Toro provides warnings in certain cases based on its knowledge of the presence of one or more listed chemicals without evaluating the level of exposure, as not all the listed chemicals provide exposure limit requirements. While the exposure from Toro products may be negligible or well within the “no significant risk” range, out of an abundance of caution, Toro has elected to provide the Prop 65 warnings. Moreover, if Toro does not provide these warnings, it could be sued by the State of California or by private parties seeking to enforce Prop 65 and subject to substantial penalties.

Notes:

Notes:


TORO®