CROWN VERITY

Infinite Series
OWNERS MANUAL
Argentinian Grill

2024

WARNING: FOR YOUR SAFETY

DO NOT store or use gasoline or other flammable vapors and liquids in the vicinity of this or any other appliance.

DO NOT store an LP cylinder that is not connected for use in the vicinity of this or any other appliance.

DO NOT obstruct the flow of combustion and ventilation air to the unit.

DO NOT place combustibles on the undershelf. Do not stand on the undershelf as it could result in injury or irreparable damage.

DO NOT leave your unit unattended while in operation.

DO NOT use under the influence of alcohol or drugs.

DO NOT use this unit until you have read and understood all of the information in this manual.

WARNING: Damage caused by a failure to follow the warnings and safety instructions provided in this manual is not covered under warranty.

CROWN VERITY

PROUDLY MADE IN NORTH AMERICA

Congratulations and thank you for choosing Crown Verity.

The Infinite Series Product line was developed for high performance and flexibility of design making it distinctly different than any other grill line.

This manual contains important information necessary for the proper and safe use of the product. Please read this manual carefully and follow all warnings and instructions to ensure safe operation and to maximize your cooking enjoyment.

Crown Verity is here to help. Should you ever have any questions about cooking with or caring for your Crown Verity product, please contact our customer service desk at:

1-888-505-7240 or service@crownverity.com

Please have your model number and serial number ready when you call or include it in your email.

Model Number	
Serial Number	

Note: The serial number and model number can be found on the rating plate (See Appendix A for rating plate references).

THIS MANUAL MUST REMAIN WITH THE PRODUCT OWNER FOR FUTURE REFERENCE.

For your Safety

WARNING: This appliance shall be used only in a well-ventilated space and shall not be used in a building, garage, or any other enclosed area. Ensure that the clearances to combustibles are adhered to as listed in this manual.

WARNING: Improper installation, adjustment, alteration, service or maintenance can cause property damage, injury or death. Please read the operating and maintenance instructions provided in this manual thoroughly before installing or servicing this equipment. It is your responsibility to see that your units are properly assembled, installed, and cared for.

WARNING: Keep any electrical supply cords and fuel supply hose(s) away from any hot surfaces.

WARNING: This is an outdoor cooking appliance and is not intended to be installed in or on a boat or recreational vehicle.

IMPORTANT: Damage caused by a failure to follow the warnings and safety instructions provided in this manual is not covered under warranty.

California Proposition 65 Warning

The burning of gas cooking fuel generates some by-products that are on the list of substances which are known by the State of California to cause cancer or reproductive harm. California law requires businesses to warn customers of potential exposure to such substances. To minimize exposure to these substances, always operate the unit according to this Owner's Manual, and ensure you provide proper ventilation when cooking with gas.

Inspecting Your Shipped Appliances

IF SHIPMENT ARRIVES DAMAGED

This product was carefully inspected and tested before leaving the factory. Upon acceptance of the shipment, all freight damage responsibility is relinquished by the freight carrier.

VISIBLE LOSS OR DAMAGE

- Be sure any visible damage to the carton is noted on the freight bill or express receipt and signed by the person making the delivery.
- **FILE CLAIM OR DAMAGES IMMEDIATELY**, regardless of extent of damage.

CONCEALED LOSS OR DAMAGE

- If damage is unnoticed until the appliance is unpacked, notify the transportation company or carrier immediately and file a "concealed damage" claim with them. This should be done within 5 days of the date delivery is made to you. Be sure to hold on to the packaging for inspection. We cannot assume responsibility for damage or loss incurred in transit.

Unpacking and Assembly

The appliance arrives fully assembled and ready to use. Please follow the uncrating and unpacking steps to avoid damage to the product.

The shipping weight on smaller units is approximately 300 lbs. and larger units may weigh over 500 lbs.

WARNING: Use two or more people to move or install this unit. Failure to follow instructions can result in personal injuries.

REMOVING THE CARTON

- Remove the staples at the bottom of the carton.
- Lift off the carton
- Cut straps holding the appliance to the pallet. The straps are installed under load, wear protective eyewear when cutting the straps as they may spring back.
- With assistance, remove the appliance from the pallet and place into desired location.

For appliances with wheels, the appliance will not directly roll off of the pallet. An option to safely remove the appliance off the pallet is by lifting one end of the appliance high enough to place a ramp under the wheels and then lift the other end while rolling the appliance off the pallet.

When moving a Crown Verity appliance across uneven surfaces be cautious and move slowly. It is highly recommended that a carpet dolly is used to ensure no damage is caused to the structure of the cart. Failure to do so will not be covered under the warranty.

INTERIOR PACKING

Crown Verity takes all necessary measures in securing and protecting the appliance to ensure it arrives in the same condition that it left our factory.

BE SURE YOU HAVE REMOVED ALL TIE DOWNS BEFORE USING THE APPLIANCE.

BE SURE YOU HAVE REMOVED ALL OF THE PROTECTIVE PAPER ON THE STAINLESS STEEL SURFACES BEFORE USING THE APPLIANCE.

- Remove any loose items located under the cabinet or in the firebox, such packaging material, manuals or any other accessory you may have purchased with your grill.
- Carefully cut the tie downs securing the cooking grates in place.
- Remove any stainless-steel protective paper on the exterior of the appliance. It is important to clean any area that you have removed the protective paper, to ensure no glue residue is left over. Using the grill burner prior to removing the protective paper will permanently adhere the paper to the appliance and will not be covered under warranty.

Table of Contents

For your Safety ____ 4

California Proposition 65 Warning ____ 4

Inspecting Your Shipped Appliances ____ 5

Unpacking and Assembly ____ 5

Table of Contents ____ 7

Safe Operation ____ 9

Before You Cook- Positioning Your Argentinian Grill ____ 10

- CHOOSING A LOCATION ____ 10
- LEVEL GROUND ____ 11

Specifications and Installations ____ 11

- INSTALLATIONS ____ 11
- BUILT-IN INSTALLATIONS ____ 12
- CLEARANCE TO COMBUSTIBLES ____ 12
- OVERHEAD PROTECTION AND EXHAUST REMOVAL ____ 12
- FIGURE 1. CLEARANCES TO COMBUSTIBLES ____ 13
- FIGURE 2. EXHAUST HOOD REQUIREMENTS ____ 13
- FIGURE 3. REFERENCE DRAWING FOR CUT-OUT DIMENSIONS ____ 15

Built-In Cut-out Dimensions ____ 16

General Operating Procedures ____ 16

- BEFORE FIRST USE ____ 16
- BEFORE EACH USE ____ 16
- WHILE YOU ARE COOKING ____ 17
- GRILL DIMENSIONS – IAG36 MODULAR GRILL ____ 18
- GRILL DIMENSIONS – IBIAG36 BUILT-IN GRILL ____ 19
- GRILL DIMENSIONS – IBIAG36-IJ BUILT-IN GRILL WITH INSULATED JACKET ____ 20
- INSTALLING THE WHEEL ____ 21
- INSTALLING THE FIRE BRICKS ____ 24
- RAISING AND LOWERING THE GRILL SURFACE ____ 26

Basic Grilling ____ 27

- RECOMMENDED EQUIPMENT ____ 27
- PREPARING A WOOD FIRE ____ 27

COOKING OVER A WOOD FIRE _____ 30
COOKING OVER CHARCOAL _____ 30
Caring for Your Grill _____ 30
Contacting Crown Verity Customer Care _____ 31
Installation Checklist _____ 32
RESIDENTIAL LIMITED WARRANTY TERMS & CONDITIONS _____ 33
COMMERCIAL LIMITED WARRANTY TERMS & CONDITIONS _____ 35
Exploded Parts View _____ 38
Grill Parts List _____ 39

Safe Operation

This manual covers Crown Verity Argentinian Grill models listed below. Some features and options will vary based upon which model you purchased. Read this manual thoroughly to ensure proper operations of the specific appliance model(s) purchased.

CROWN VERITY MODELS COVERED BY THIS MANUAL	
BUILT-IN	MODULAR
IBIAG36	IAG36

WARNING: Certain surfaces of your grill can get hot enough to cause severe burns. Never leave the appliance unattended when in use to prevent unintentional contact.

WARNING: Children should never be left alone or unattended in an area where a grill is located. Place your grill well away from areas where children play. Do not store items that may interest children in or around the appliance, in the cart, or in the masonry enclosure.

IMPORTANT: Improper use or installation of the appliance is dangerous. The grill produces intense heat and therefore the risk of accidents or potential injuries is increased. Carefully follow all instructions, including the following:

- To reduce the risk of fire, burns or other injury, read this manual thoroughly. Begin by ensuring proper installation and servicing. Do not repair or replace any part of the grill yourself unless it is specifically recommended in the manual.
- Always have an ABC Fire Extinguisher accessible — never attempt to extinguish a grease fire with water or other liquids.
- Do not operate the grill under an unprotected combustible construction. Use only in a well-ventilated area. The unit is for outdoor use only.
- Do not obstruct any of the openings on the grill or otherwise obstruct the flow of combustion and ventilation air.
- Do not build the grill into any combustible structure that is closer than 12 inches (30.5 cm) below the body of the grill. Maintain at least 36 inches (91.4 cm) above the grill body from the sides and back of the grill from any combustible surface or structure.
- Keep all gas hoses away from the hot surfaces of the grill, including all external surfaces of the unit.
- Keep all electrical cords away from the hot surfaces of the appliance.
- Ensure proper installation and servicing by following all instructions in this manual and any other instructions or markings provided with this product.
- Do not heat unopened food containers on the appliance. The buildup of pressure resulting from the heat may cause the container to burst.

- Never lean on any part of the grill.
- The cabinet below the grill is not for storage. It is for service access and cleaning. Do not store combustible materials in the cabinet below the grill or items made with materials that might melt or otherwise be damaged by heat.
- Never move the appliance when hot. When in use, portions of the grill are hot enough to cause severe burns.
- Always use dry potholders or gloves on hot surfaces or cooking tools: moist or damp potholders or gloves may cause steam burns. Never use a towel or bulky cloth in place of potholders. Do not let potholders touch hot portions of the grill surfaces or allow them to get near the open flame.
- Never grill without the ash tray in place. Always ensure the ash tray is pushed all the way to the back of the grill.
- The grill will retain heat after use, especially the cooking grates. Use caution when coming in contact with the unit immediately after use.
- Be sure the unit is cool before using any aerosol cleaner on it or near it. The chemical used for aerosol propellant could ignite in the presence of heat. Never use aerosol cleaner on the cooking surfaces.
- Do not use any cleaner, including water, on a hot grill.
- Do not burn manufactured logs, driftwood, trash, leaves, paper, cardboard, plywood, painted or stained or pressure treated wood. Avoid using softwoods such as pine or cedar that can throw sparks.
- Do not use near or under overhanging trees or shrubs.
- Do not use in windy conditions.
- Do not leave the fire unattended.
- Allow 24 hours after last use before attempting to empty the ash bin.

Before You Cook- Positioning Your Argentinian Grill

CHOOSING A LOCATION

Important considerations for all grill placements include exposure to wind, proximity to foot traffic or areas where people congregate.

- DO NOT place the grill in a location that is likely to be exposed to a strong wind. A strong enough wind might blow hot embers towards combustible materials or structures.
- DO NOT place the grill where it is likely to be bumped into or inadvertently touched by passersby.
- DO NOT place the grill on a surface that is unable to safely support the weight of the unit as it may topple or tip over.

- DO NOT place the grill on any surface that would allow it to change position easily or inadvertently.
- When in use, if applicable, always have the casters in the locked position.
- NEVER locate the grill in a building, breezeway, shed or other such enclosed areas.
- DO NOT place the built-in grill on a combustible surface.
- The grill is not intended to be installed in or on a boat or recreational vehicle.
- For ease of use and safe operation, it is recommended the surface on which the built-in grill sits be at least 36 inches (91.4 cm) high (counter-height) and not more than 42 inches (106.7 cm) high (bar-height).

IMPORTANT: • Do not build the grill into any combustible structure that is closer than 12 inches (30.5 cm) below the body of the grill. Maintain at least 36 inches (91.4 cm) above the grill body from the sides and back of the grill from any combustible surface or structure.

LEVEL GROUND

It is critical that this appliance is level upon installation. A grill that is not level will cause uneven heating. A carpenter's spirit level should be used to level the grill both front to back and side to side. If the floor is uneven or has a slope, re-leveling may be required each time you move a freestanding unit.

Specifications and Installations

INSTALLATIONS

The installation of this appliance must be in accordance with:

All applicable local codes, or in the absence of local codes; Canada: must conform to current National Standard CAN/CGA B149.1&.2 - natural gas/ propane installation code. U.S.A.: must conform to national Fuel Gas Code, ANSI Z223.1/NFPA 54 edition.

- Maintain minimal clearances to combustible materials (See "Figure 1").
  - ✓ 36 inches (91.4 cm) from side(s)
  - ✓ 36 Inches (91.4 cm) from back
  - ✓ 60 inches (152.4 cm) from Non-combustible overhangs

- Always keep the area surrounding your grill clear of all combustible materials, gasoline, or other flammable liquids.
- Use your grill OUTDOORS ONLY and in a well-ventilated space, preferably 10 ft. (3 m) from dwellings or outbuildings.
- Casters, if applicable, must be locked when the appliance is in operation.

BUILT-IN INSTALLATIONS

The Crown Verity Built-In Grills are designed for easy installation into masonry enclosures.

NOTE: Crown Verity Built-In Grills are intended either for installation in a built-in enclosure constructed of non-combustible materials or for an installation in a built-in enclosure constructed of combustible material when installed with an insulated jacket.

For non-combustible applications, the grill drops into the opening specified in the cutout detail drawings (See “Figure 3”) and hangs from its countertop trim.

CLEARANCE TO COMBUSTIBLES

Minimum clearance from the sides and back of the grill firebox to adjacent construction below the countertop surface is 12” (30.5 cm).

Minimum clearance from the sides and back of the grill to any adjacent construction above the countertop surface is 36” (91.4 cm).

A minimum of 12 inches (30.5 cm) clearance is required on the left and right side of the grill above the countertop for the rotisserie motor and spit rod.

If the grill is to be placed into a combustible enclosure, an approved insulated jacket is necessary and is available only through your Crown Verity dealer. Crown Verity insulated jackets have been designed and tested specifically for your grill.

OVERHEAD PROTECTION AND EXHAUST REMOVAL

If installed under any combustible construction the cooking area over the grill MUST be covered with an exhaust hood. The hood must provide 6 inches (15.2 cm) of overhang on all exposed sides. The exhaust hood shall provide no less than 1,200 CFM for proper exhaust ventilation. The hood must be approved for outdoor installation and provided with a dedicated GFCI protected branch circuit (See “Figure 2” for further details).

FIGURE 1. CLEARANCES TO COMBUSTIBLES

IBIAG36 Shown

All appliances covered by this manual are subject to the clearances shown in Figure 1.

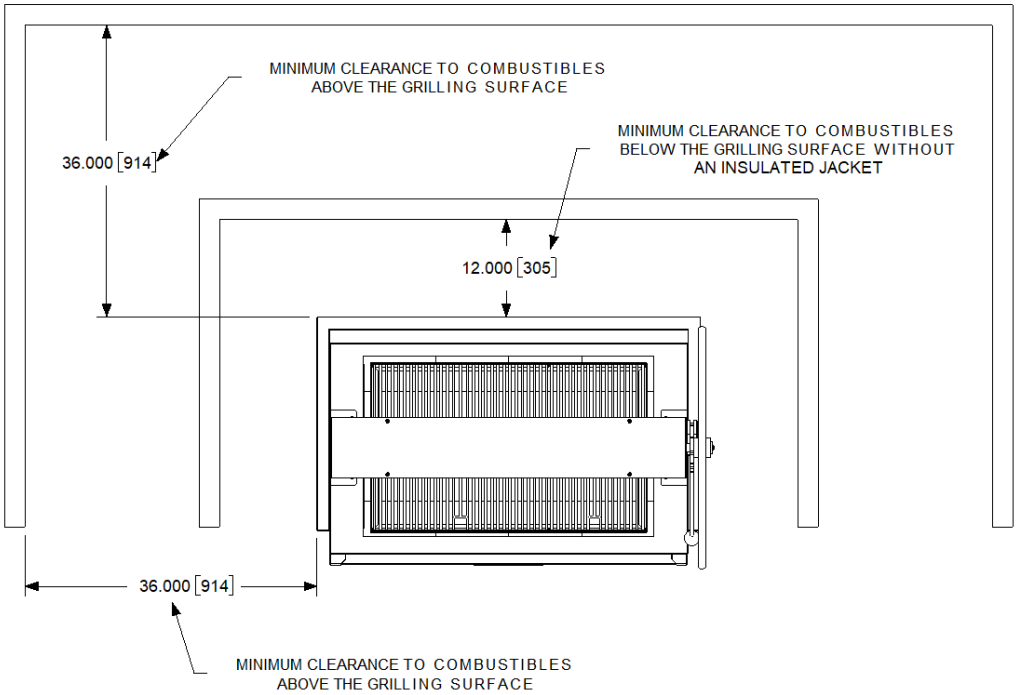

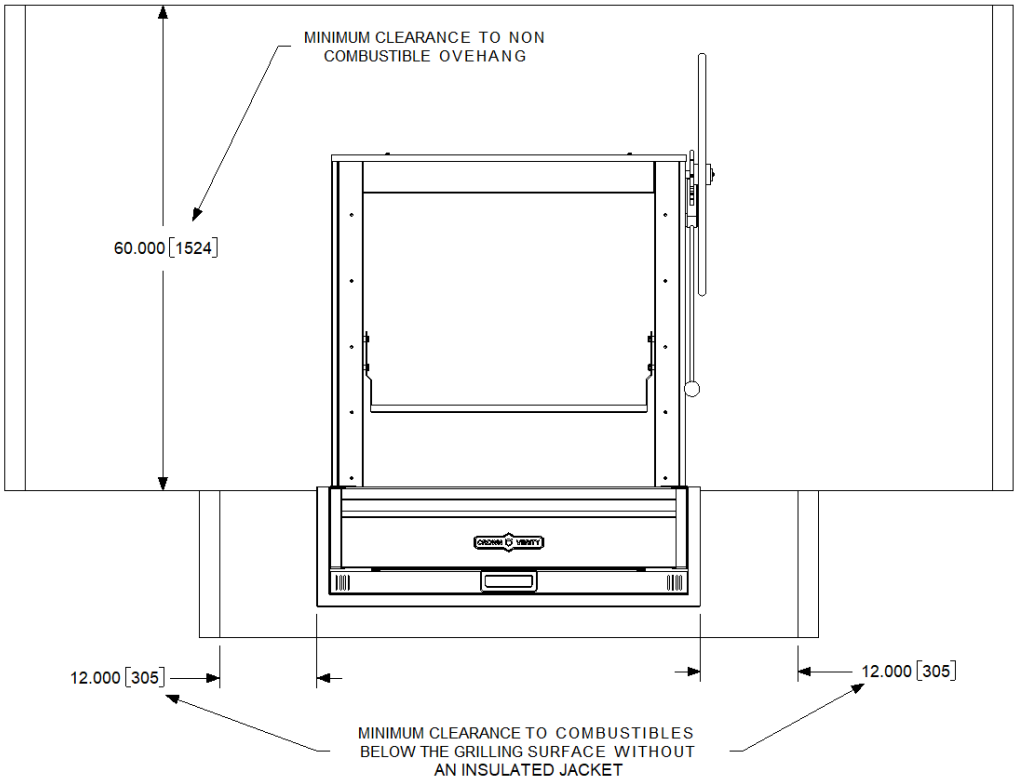

FIGURE 2. EXHAUST HOOD REQUIREMENTS

IBI36AG Package Shown

All appliances covered by this manual are subject to the clearances shown in Figure 2.

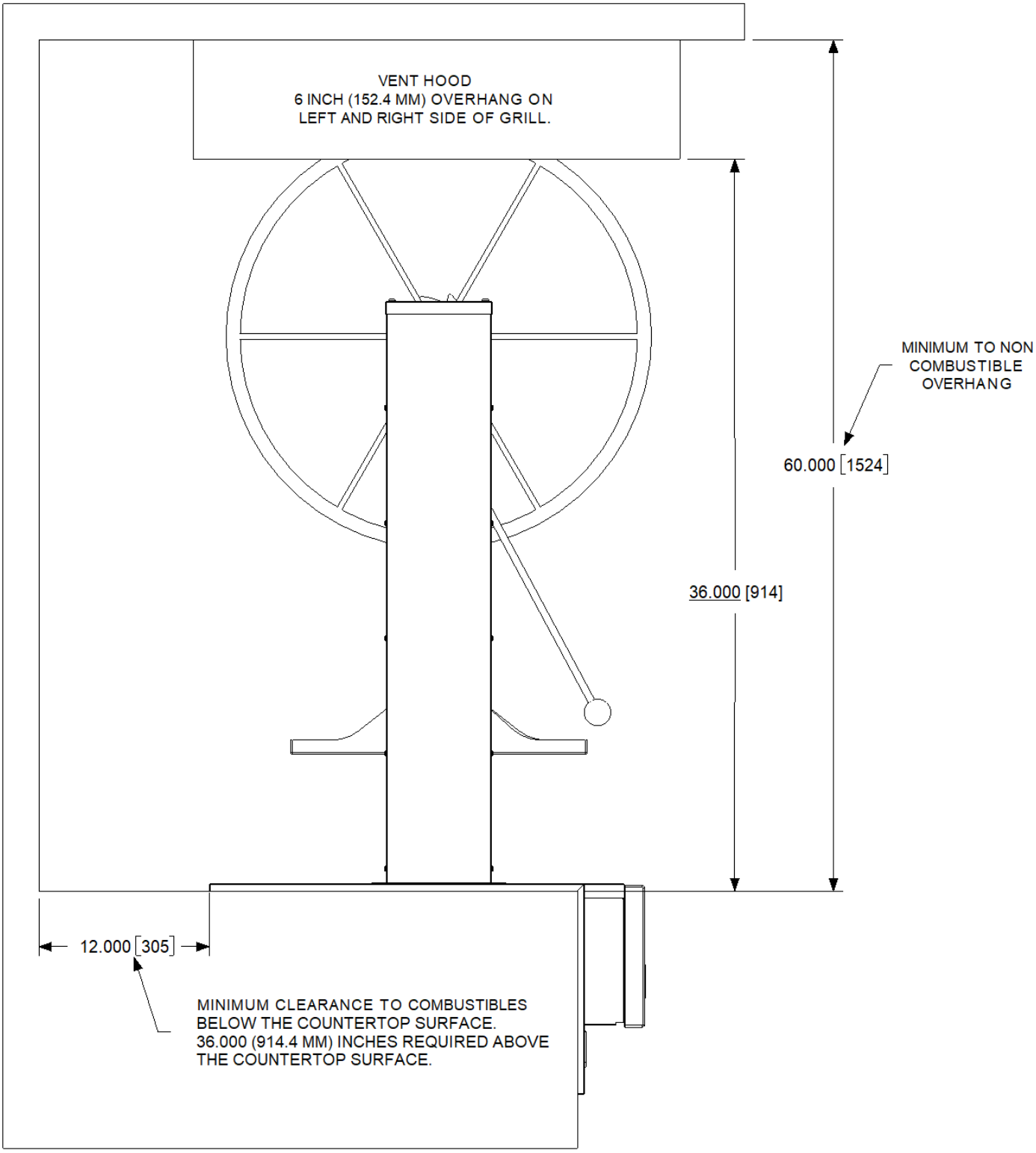

FIGURE 3. REFERENCE DRAWING FOR CUT-OUT DIMENSIONS

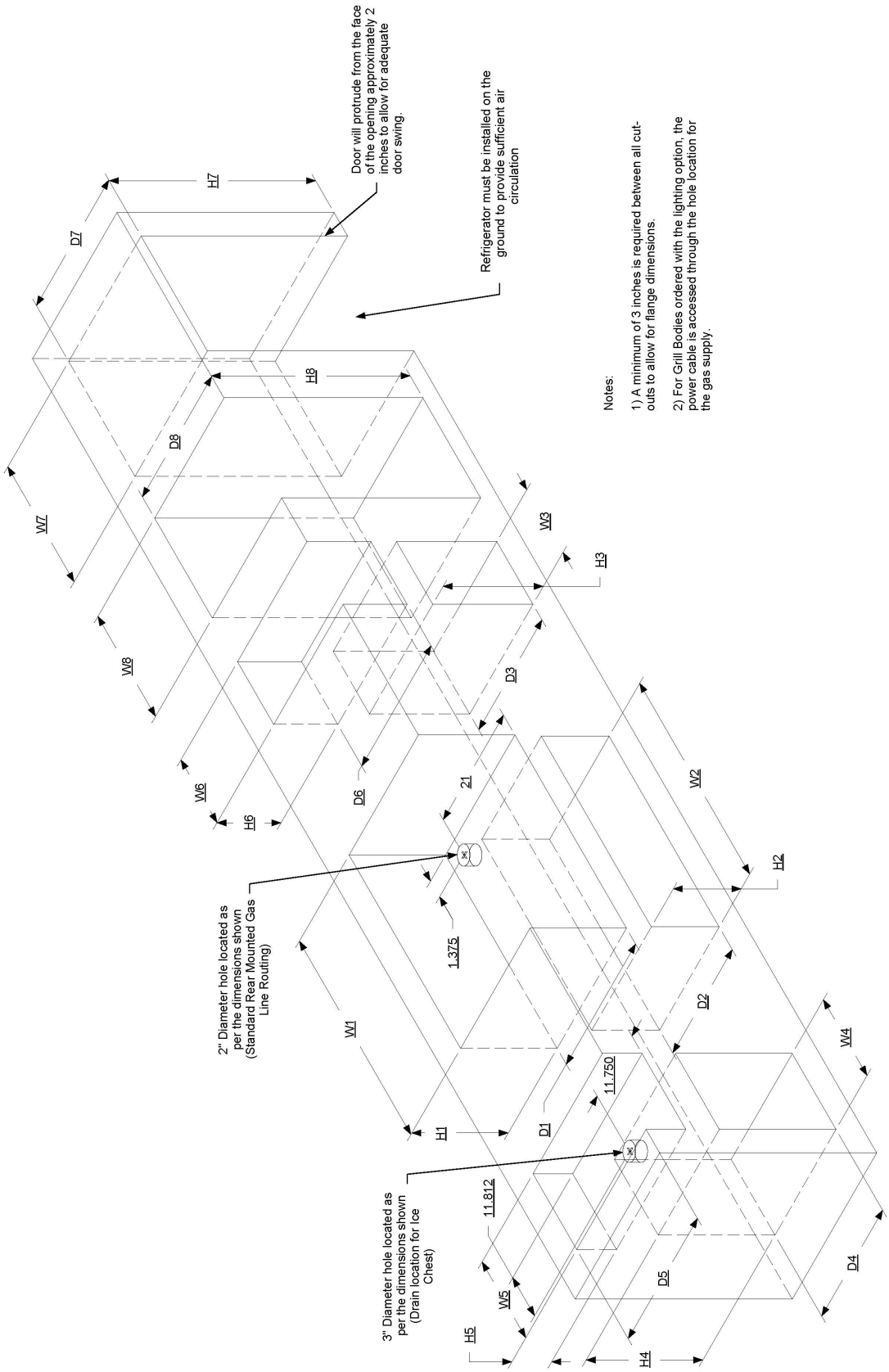

Built-In Cut-out Dimensions

The measurements and dimensions detailed below are designed to assist with planning your outdoor kitchen. Due to continuing product innovation, specifications are subject to change without notice. Please reference the Manual for details on the proper installation of your Crown Verity Argentinian Grill.

BUILT-IN ARGENTINIAN GRILLS

	H1	W1	D1
IBIAG36	13.000	45.000	24.750
(cm)	33.0	114.3	62.9

BUILT-IN ARGENTINIAN GRILLS WITH INSULATED JACKET

	H1	W1	D1
IBIAG36	14.500	47.845	26.250
(cm)	36.8	121.6	66.7

General Operating Procedures

BEFORE FIRST USE

A quick safety check should be performed before using your appliance for the first time. Please ensure that:

1. All packing materials and tie-downs have been removed from the appliance. (See INDEX: “Unpacking & Assembly” for further details.)

BEFORE EACH USE

A quick safety check should be performed before each time you use the grill (for your safety).

1. Check that the area near the appliance is clear of combustible materials and vapors, including alcohol, gasoline, aerosol containers and dry goods. Keep electrical cords from being in contact with the unit.
2. Do not use the appliance with overly loose-fitting clothing, especially loose sleeves that may come in contact with the hot surfaces.
3. Have insulated gloves with long cuffs ready and available.

4. Never grill without the ash tray in place. Always ensure that the tray is pushed all the way to the back.

WHILE YOU ARE COOKING

IMPORTANT: Practice with your grill to understand the temperature variables and nuances of your unit before hosting your guests.

The appliance surfaces get very hot as will the food you are cooking. Follow these tips while operating the grill:

- Never leave the appliance unattended
- Never move the appliance while it is in use or when it is hot.
- The use of alcohol, prescription or non-prescription drugs may impair your ability to safely operate the appliance.
- Do not touch the grill rack, any surfaces inside or around the firebox, the uprights or cross member while the grill is hot. These surfaces can cause serious burns.
- Use caution when touching the wheel. The wheel can become hot under certain cooking and wind conditions. Insulated gloves are recommended.
- Always control the movement of the wheel when raising and lowering the grill rack.
- Be very careful transporting any hot food items. They can cause serious burns to yourself or those around you.
- Only use long-handled tools with brass or stainless bristles to clean the cooking surface. The handle must be long enough that your hands stay safely outside of the appliance's cooking area.
- Always wait at least 24 hours after the grill has been hot before emptying the ash pan.

WARNING: Always control the movement of the wheel when raising and lowering the grill rack. (See INDEX: "Raising and Lowering the Grill Surface" for further details.)

5.

GRILL DIMENSIONS – IAG36 MODULAR GRILL

REVISION HISTORY			
REV	DESCRIPTION	DATE	APPROVED
00	Engineering Release	05/13/2024	Todd Stone

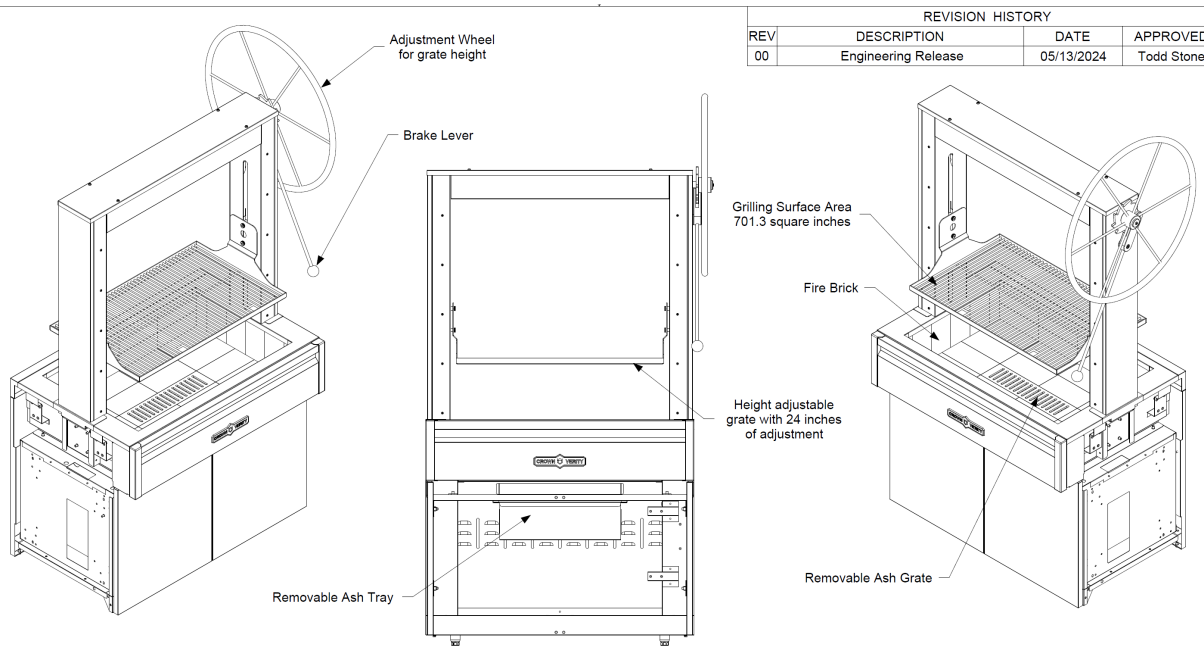

The dimensions shown are the actual physical dimensions of the grill. Additional clearances to cabinetry are dependent on the tolerances of the cut-out. The suggested cut-out dimensions are listed in the chart below but these dimensions can be reduced if the tolerances are controlled.

Please refer to the installation manual for additional clearances to combustibles.

Gauge	N/A
Weight (lbs.)	N/A
K Factor	N/A
Finish	#4
Material	SS 304

Dimensions are in inches
Linear Tolerance: +/- .015
Bend Tolerance: +/- .020
Angular Tolerance: +/- 0.5
Radial Tolerance: +/-.005

DRAWN BY: Todd Stone

CROWN VERITY
37 Adams Blvd., Brantford, Ontario, N3S 7V8
P: (519) 751-1800 www.crownverity.com

TITLE: Infinite 36 Inch Argentinian Grill

SIZE	Customer	DWG NO	REV
B	Crown Verity	IAG36	00

SCALE 1 : 13 | 05/13/2024 | SHEET 1 of 2

REVISION HISTORY			
REV	DESCRIPTION	DATE	APPROVED
00	Engineering Release	05/13/2024	Todd Stone

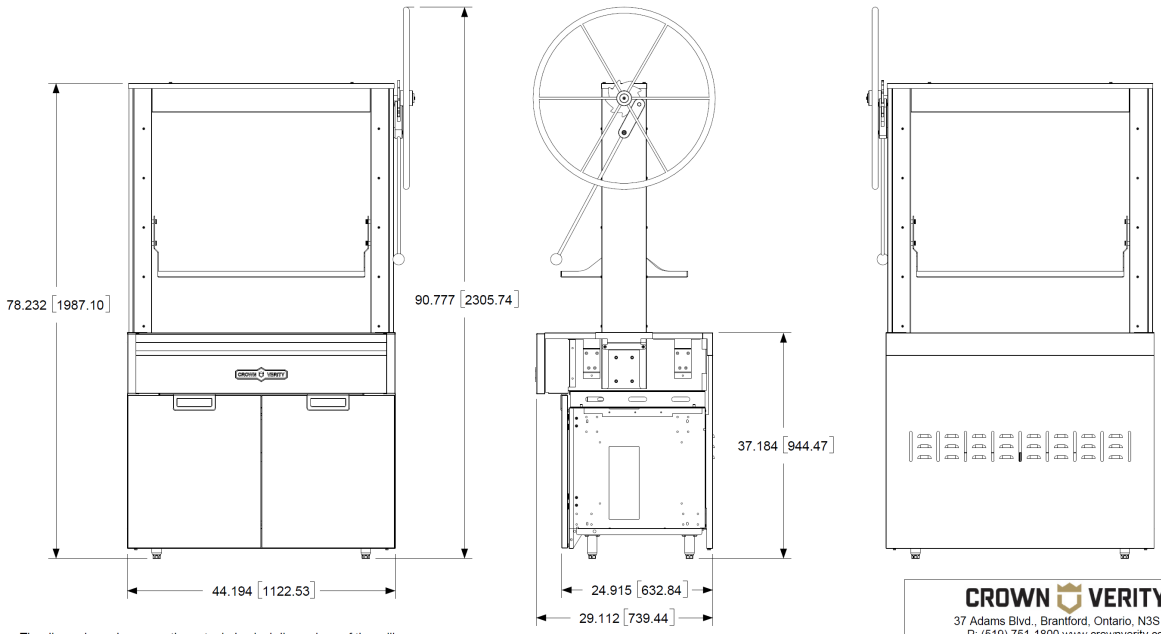

The dimensions shown are the actual physical dimensions of the grill. Additional clearances to cabinetry are dependent on the tolerances of the cut-out. The suggested cut-out dimensions are listed in the chart below but these dimensions can be reduced if the tolerances are controlled.

Please refer to the installation manual for additional clearances to combustibles.

Gauge	N/A
Weight (lbs.)	N/A
K Factor	N/A
Finish	#4
Material	SS 304

Dimensions are in inches
Linear Tolerance: +/- .015
Bend Tolerance: +/- .020
Angular Tolerance: +/- 0.5
Radial Tolerance: +/-.005

DRAWN BY: Todd Stone

CROWN VERITY
37 Adams Blvd., Brantford, Ontario, N3S 7V8
P: (519) 751-1800 www.crownverity.com

TITLE: Infinite 36 Inch Argentinian Grill

SIZE	Customer	DWG NO	REV
B	Crown Verity	IAG36	00

SCALE 1 : 13 | 05/13/2024 | SHEET 2 of 2

GRILL DIMENSIONS – IBIAG36 BUILT-IN GRILL

REVISION HISTORY			
REV	DESCRIPTION	DATE	APPROVED
00	Engineering Release	05/13/2024	Todd Stone

The dimensions shown are the actual physical dimensions of the grill. Additional clearances to cabinetry are dependent on the tolerances of the cut-out. The suggested cut-out dimensions are listed in the chart below but these dimensions can be reduced if the tolerances are controlled.

Please refer to the installation manual for additional clearances to combustibles.

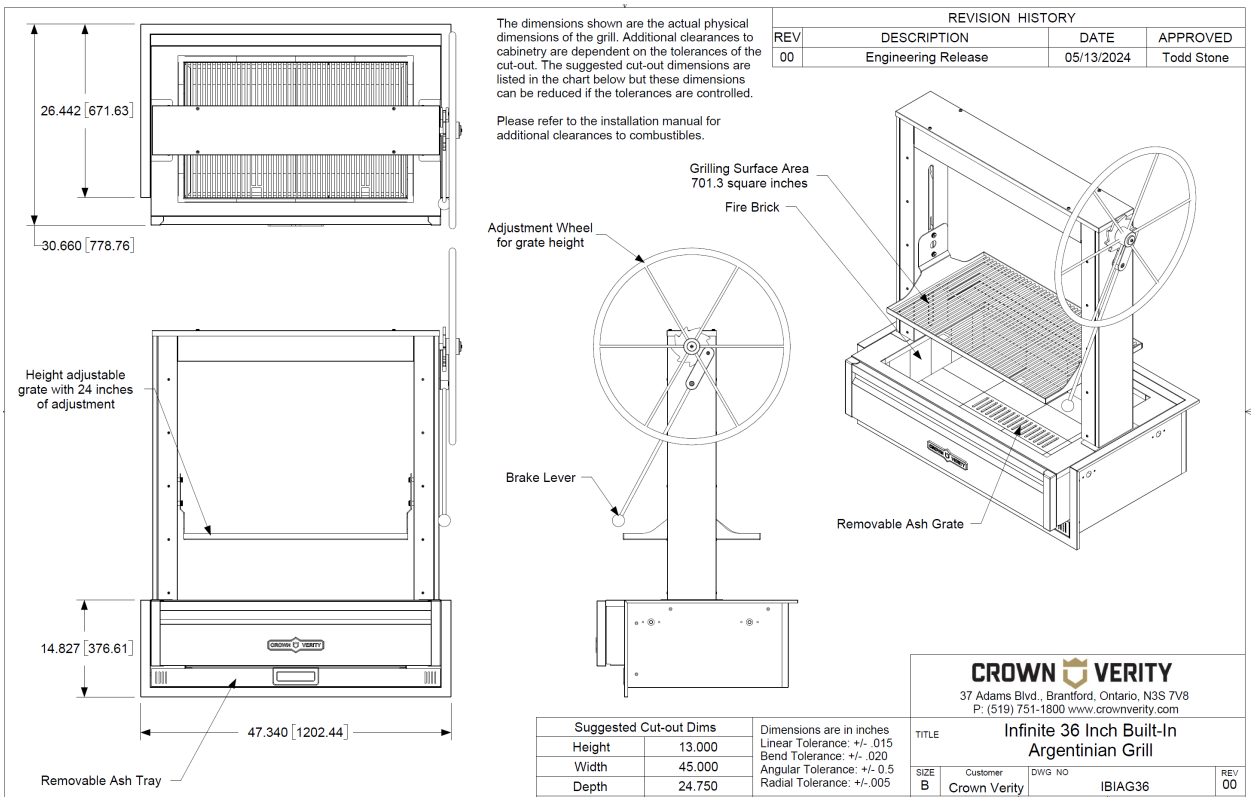

Suggested Cut-out Dims	
Height	13.000
Width	45.000
Depth	24.750
Material	SS 304

Dimensions are in inches
Linear Tolerance: +/- .015
Bend Tolerance: +/- .020
Angular Tolerance: +/- 0.5
Radial Tolerance: +/-.005

DRAWN BY: Todd Stone

CROWN VERITY
37 Adams Blvd., Brantford, Ontario, N3S 7V8
P: (519) 751-1800 www.crownverity.com

TITLE: Infinite 36 Inch Built-In Argentinian Grill

SIZE	Customer	DWG NO	REV
B	Crown Verity	IBIAG36	00

SCALE 1 : 12 | 05/13/2024 | SHEET 1 of 2

REVISION HISTORY			
REV	DESCRIPTION	DATE	APPROVED
00	Engineering Release	05/13/2024	Todd Stone

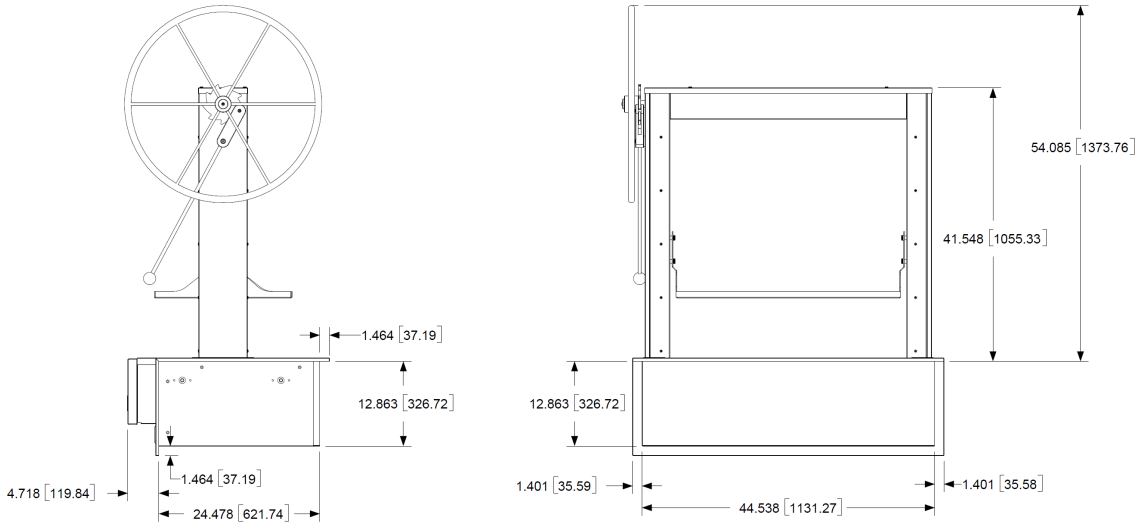

The dimensions shown are the actual physical dimensions of the grill. Additional clearances to cabinetry are dependent on the tolerances of the cut-out. The suggested cut-out dimensions are listed in the chart below but these dimensions can be reduced if the tolerances are controlled.

Please refer to the installation manual for additional clearances to combustibles.

Suggested Cut-out Dims	
Height	13.000
Width	45.000
Depth	24.750
Material	SS 304

Dimensions are in inches
Linear Tolerance: +/- .015
Bend Tolerance: +/- .020
Angular Tolerance: +/- 0.5
Radial Tolerance: +/-.005

DRAWN BY: Todd Stone

CROWN VERITY
37 Adams Blvd., Brantford, Ontario, N3S 7V8
P: (519) 751-1800 www.crownverity.com

TITLE: Infinite 36 Inch Built-In Argentinian Grill

SIZE	Customer	DWG NO	REV
B	Crown Verity	IBIAG36	00

SCALE 1 : 12 | 05/13/2024 | SHEET 2 of 2

GRILL DIMENSIONS – IBIAG36-IJ BUILT-IN GRILL WITH INSULATED JACKET

REVISION HISTORY			
REV	DESCRIPTION	DATE	APPROVED
00	Engineering Release	05/13/2024	Todd Stone

The dimensions shown are the actual physical dimensions of the grill. Additional clearances to cabinetry are dependent on the tolerances of the cut-out. The suggested cut-out dimensions are listed in the chart below but these dimensions can be reduced if the tolerances are controlled.

Please refer to the installation manual for additional clearances to combustibles.

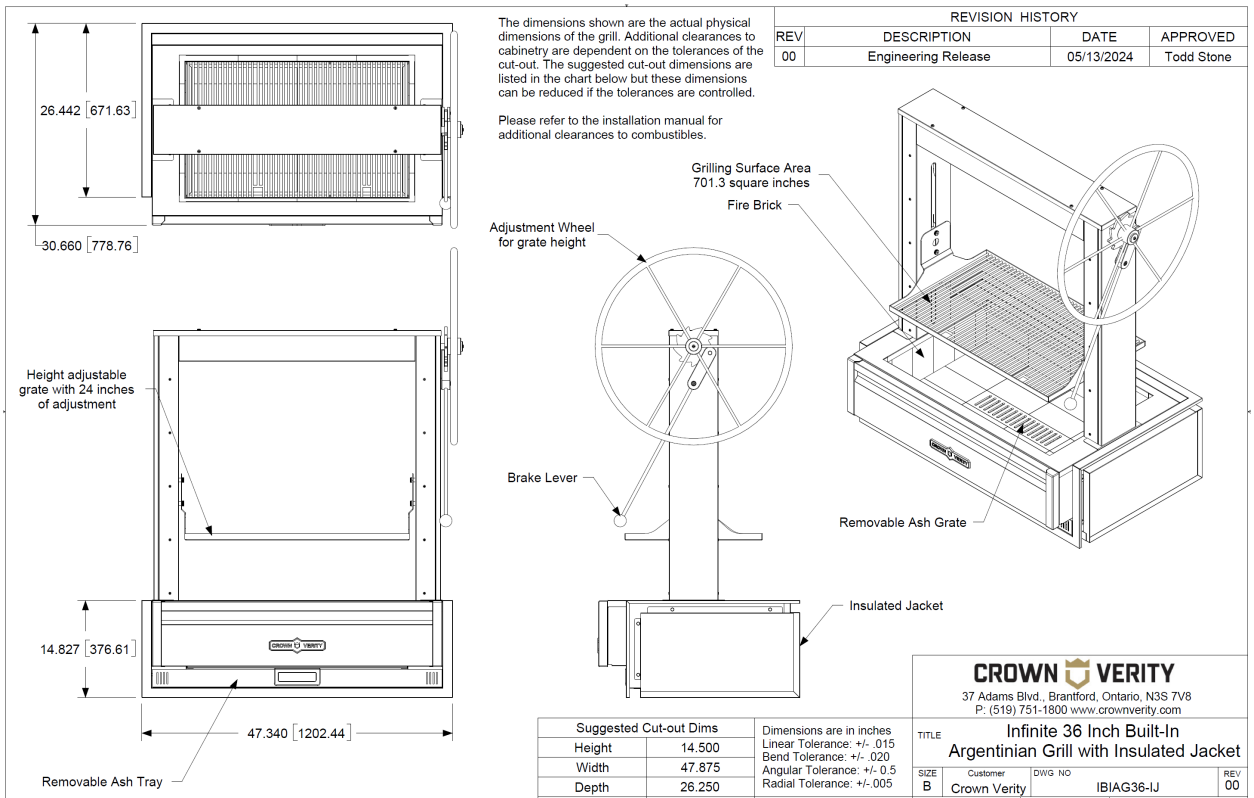

Suggested Cut-out Dims	
Height	14.500
Width	47.875
Depth	26.250
Material	SS 304

Dimensions are in inches
Linear Tolerance: +/- .015
Bend Tolerance: +/- .020
Angular Tolerance: +/- 0.5
Radial Tolerance: +/- .005

DRAWN BY: Todd Stone

CROWN VERITY
37 Adams Blvd., Brantford, Ontario, N3S 7V8
P: (519) 751-1800 www.crownverity.com

TITLE: Infinite 36 Inch Built-In Argentinian Grill with Insulated Jacket

SIZE	Customer	DWG NO	REV
B	Crown Verity	IBIAG36-IJ	00

SCALE 1 : 12 | 05/13/2024 | SHEET 1 of 2

REVISION HISTORY			
REV	DESCRIPTION	DATE	APPROVED
00	Engineering Release	05/13/2024	Todd Stone

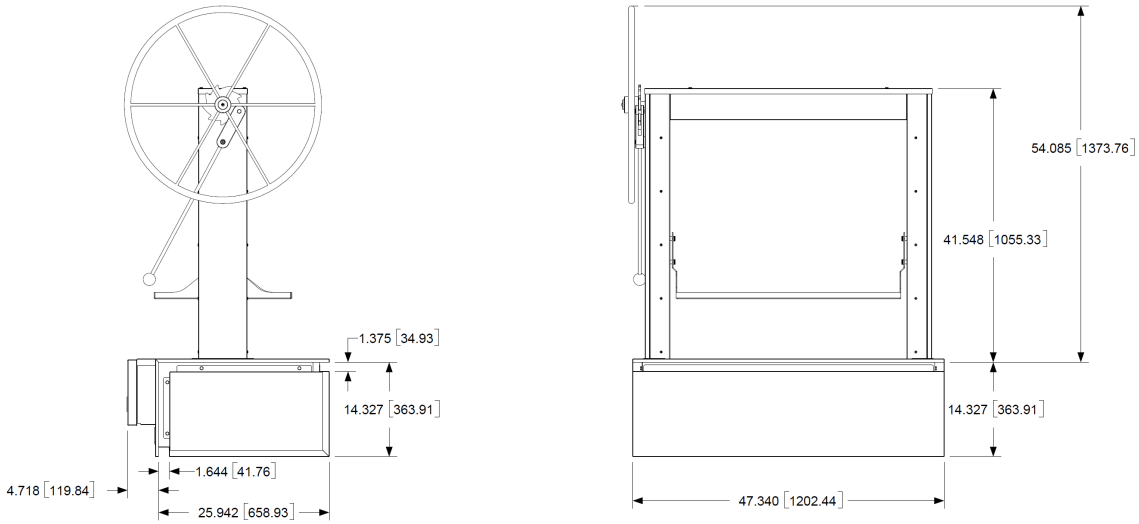

The dimensions shown are the actual physical dimensions of the grill. Additional clearances to cabinetry are dependent on the tolerances of the cut-out. The suggested cut-out dimensions are listed in the chart below but these dimensions can be reduced if the tolerances are controlled.

Please refer to the installation manual for additional clearances to combustibles.

Suggested Cut-out Dims	
Height	14.500
Width	47.875
Depth	26.250
Material	SS 304

Dimensions are in inches
Linear Tolerance: +/- .015
Bend Tolerance: +/- .020
Angular Tolerance: +/- 0.5
Radial Tolerance: +/- .005

DRAWN BY: Todd Stone

CROWN VERITY
37 Adams Blvd., Brantford, Ontario, N3S 7V8
P: (519) 751-1800 www.crownverity.com

TITLE: Infinite 36 Inch Built-In Argentinian Grill with Insulated Jacket

SIZE	Customer	DWG NO	REV
B	Crown Verity	IBIAG36-IJ	00

SCALE 1 : 12 | 05/13/2024 | SHEET 2 of 2

INSTALLING THE WHEEL

STEP 1: Install the spur gear by sliding it onto the exposed end of the shaft until it stops. Make sure the gear is positioned as shown.

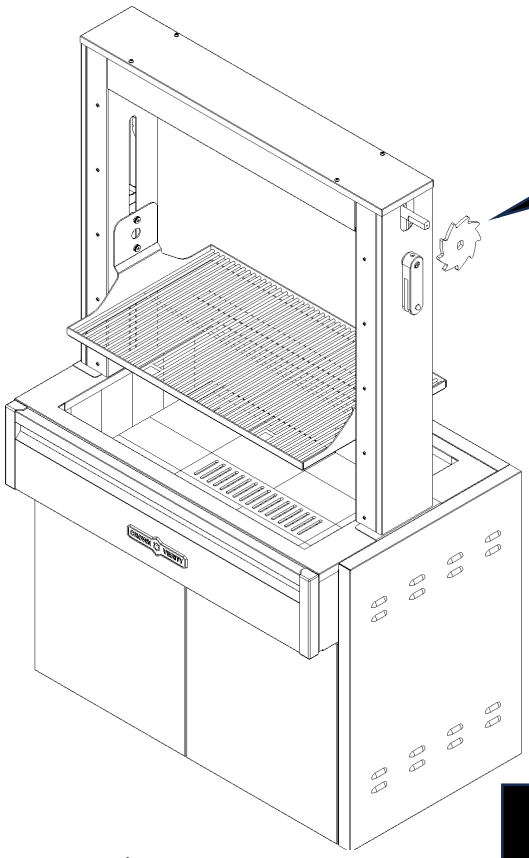

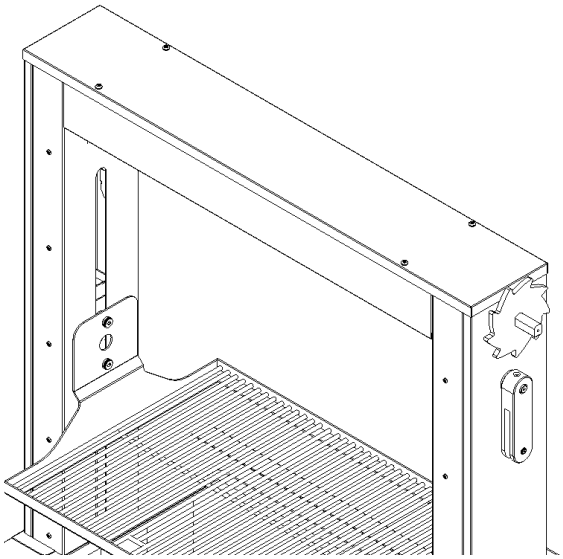

STEP 2: Rotate the brake until it engages on the spur washer. Thread the brake lever handle onto the brake.

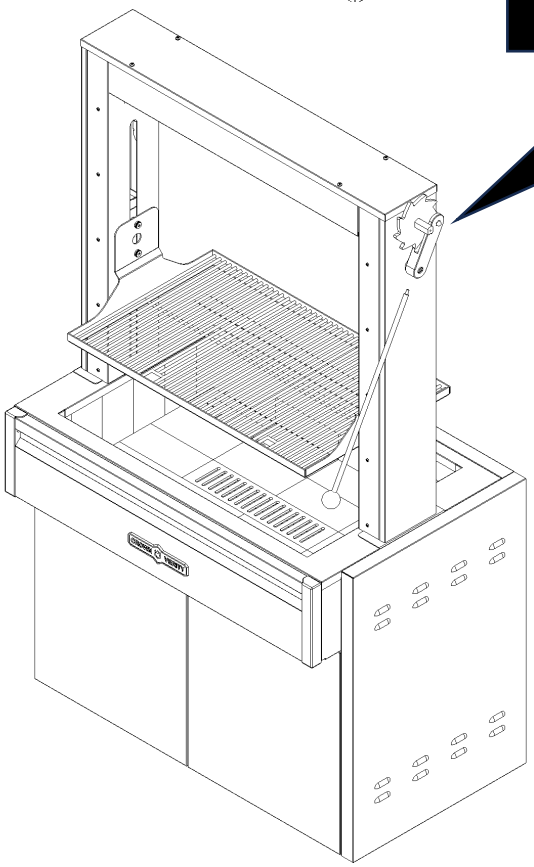

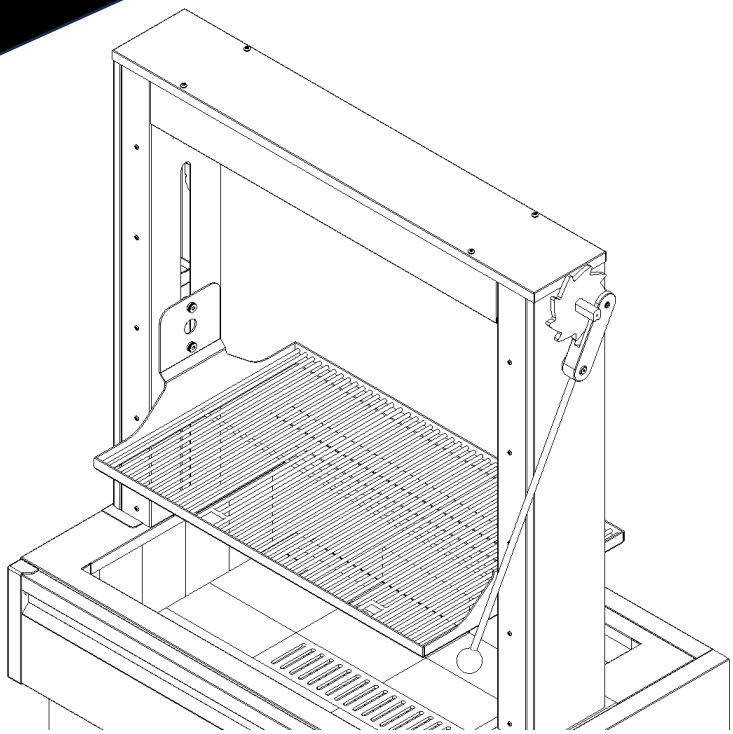

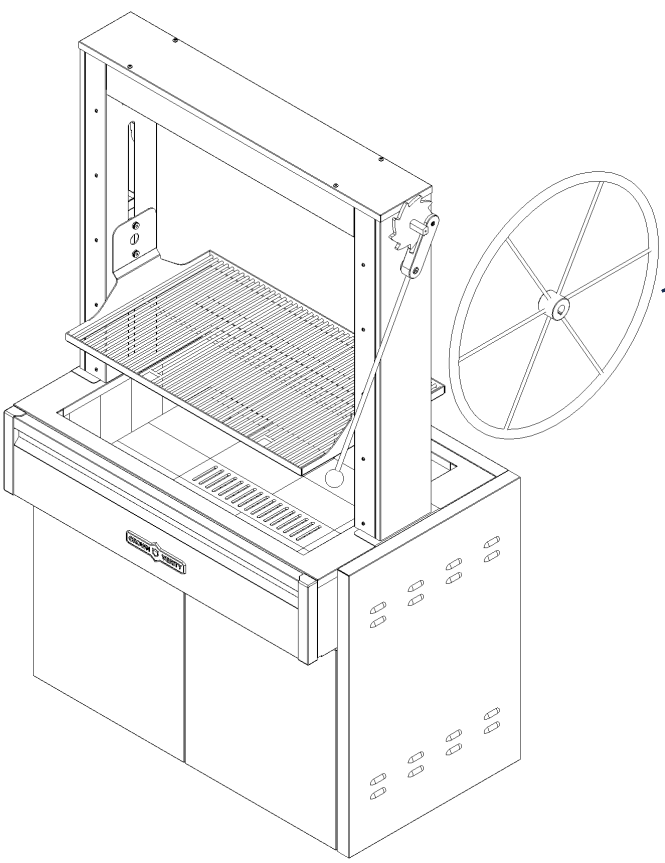

STEP 3: Slide the wheel onto the shaft until it stops against the spur gear. Rotate the wheel until the wheel keyway aligns with the keyway on the shaft.

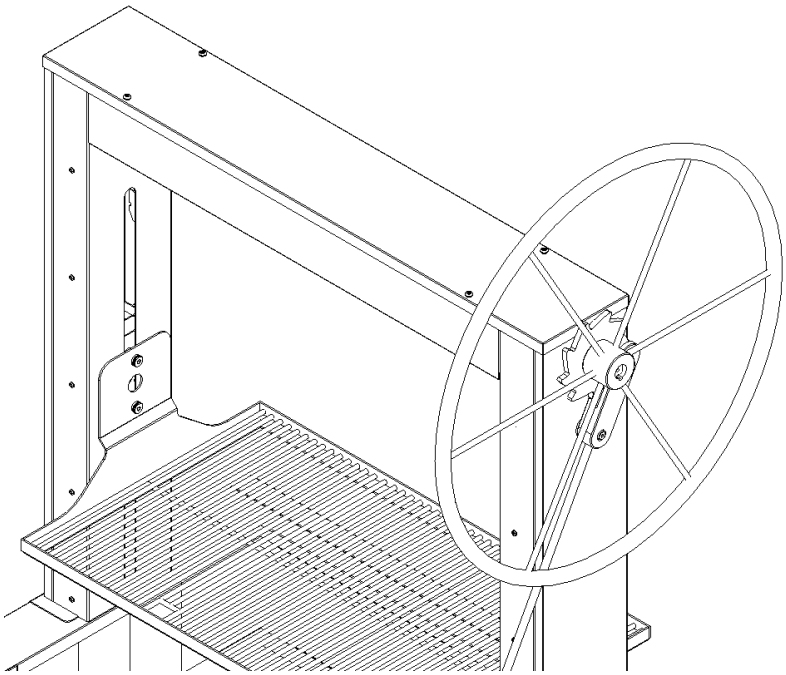

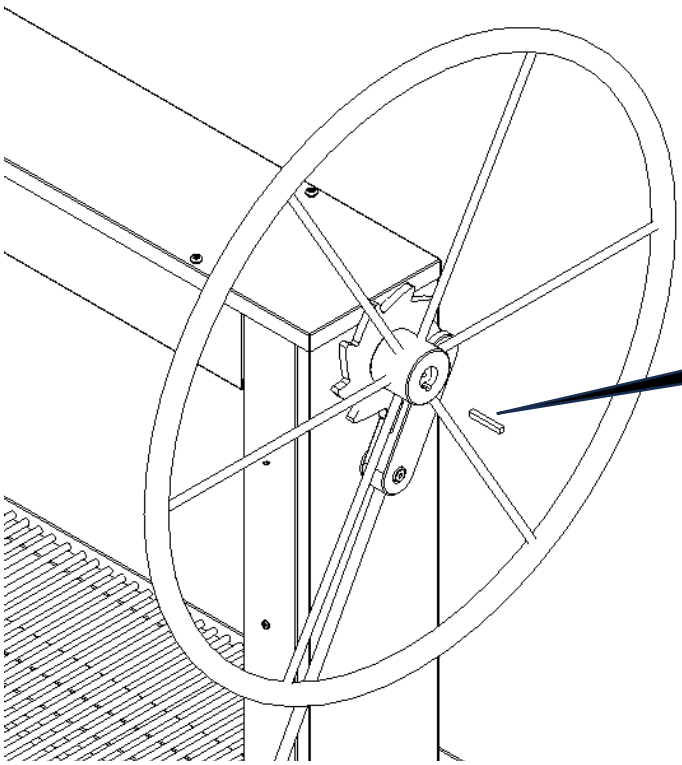

STEP 4: With the keyways aligned, slide the key into the keyways until it stops.

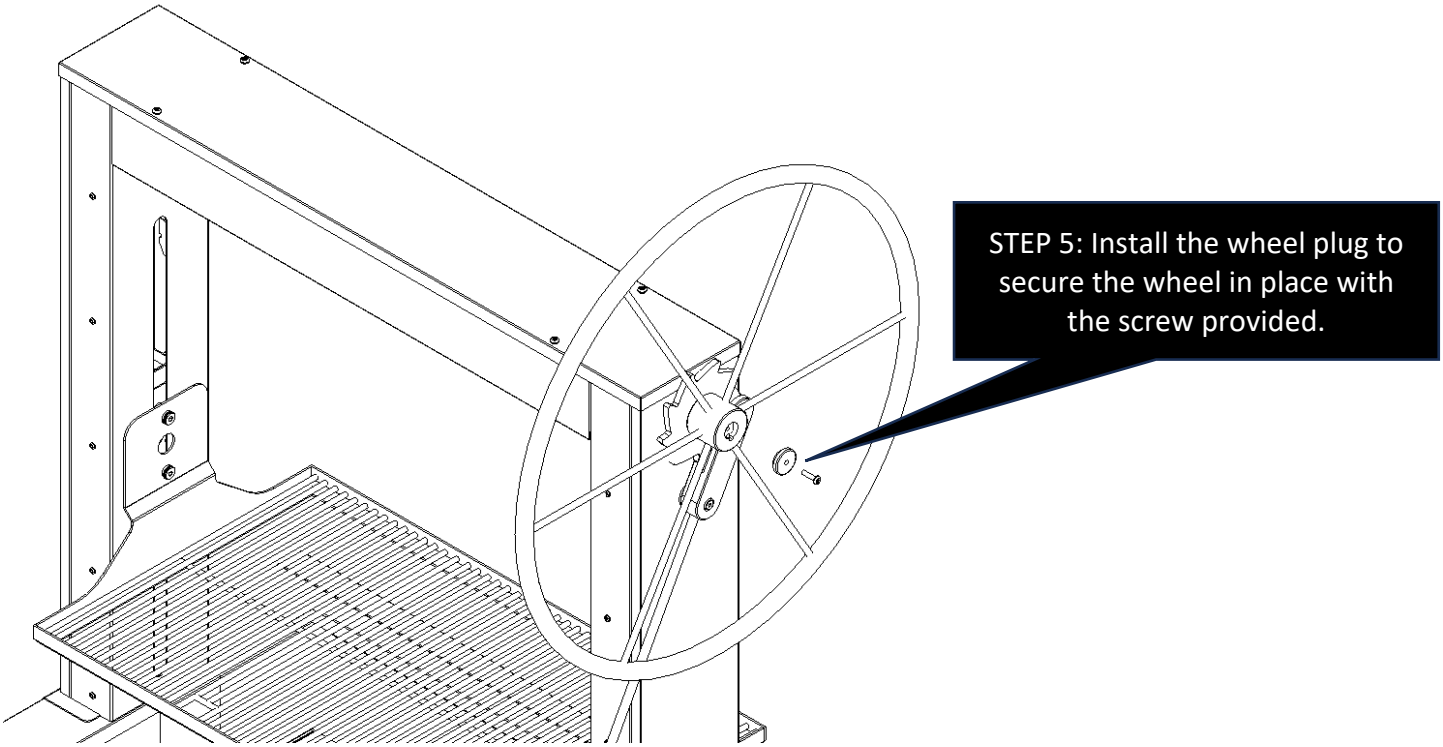
STEP 5: Install the wheel plug to secure the wheel in place with the screw provided.

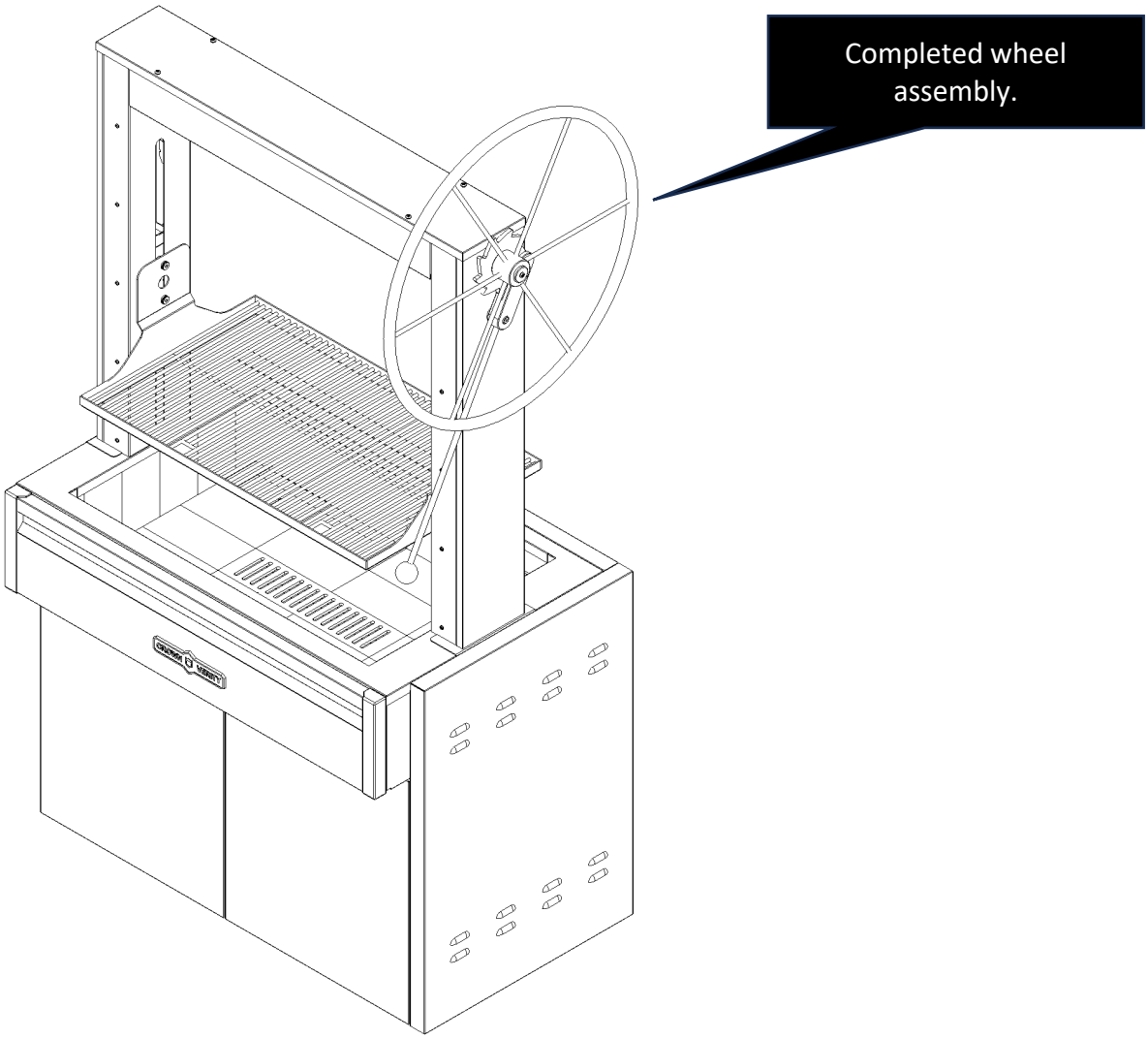
Completed wheel assembly.

INSTALLING THE FIRE BRICKS

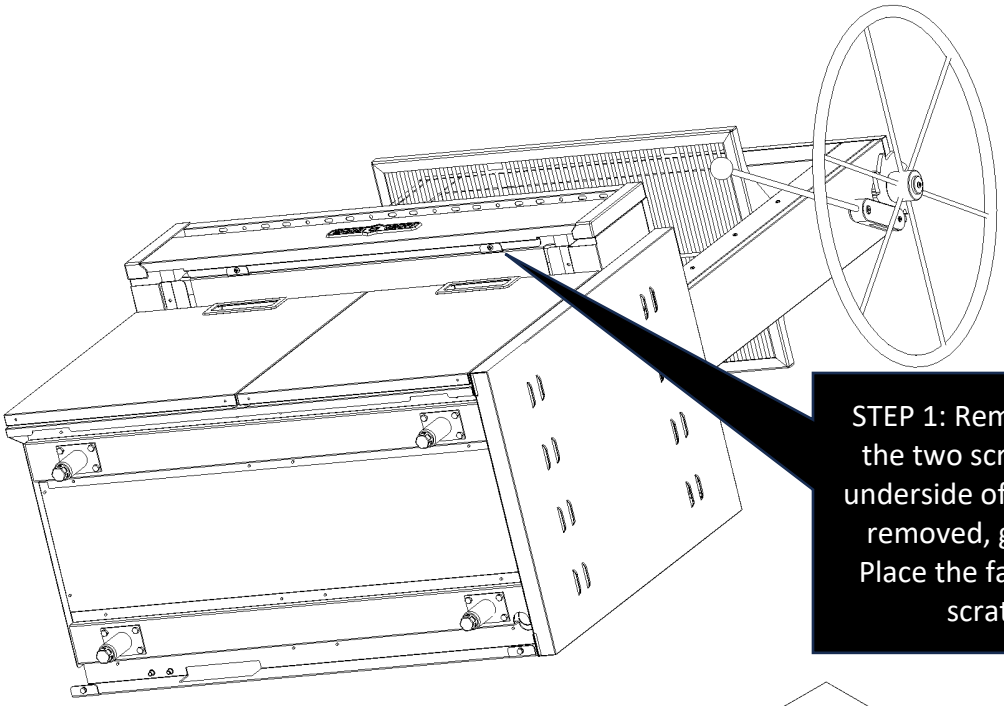

STEP 1: Remove the grill face by removing the two screws holding it in place on the underside of the face. Once the screws are removed, gently lift the face up and off. Place the face so that it faces up to avoid scratches or other damage.

STEP 2: Install the bricks on the left and rights sides of the firebox by sliding them into the channels from the front of the grill. There are 6 bricks per side.

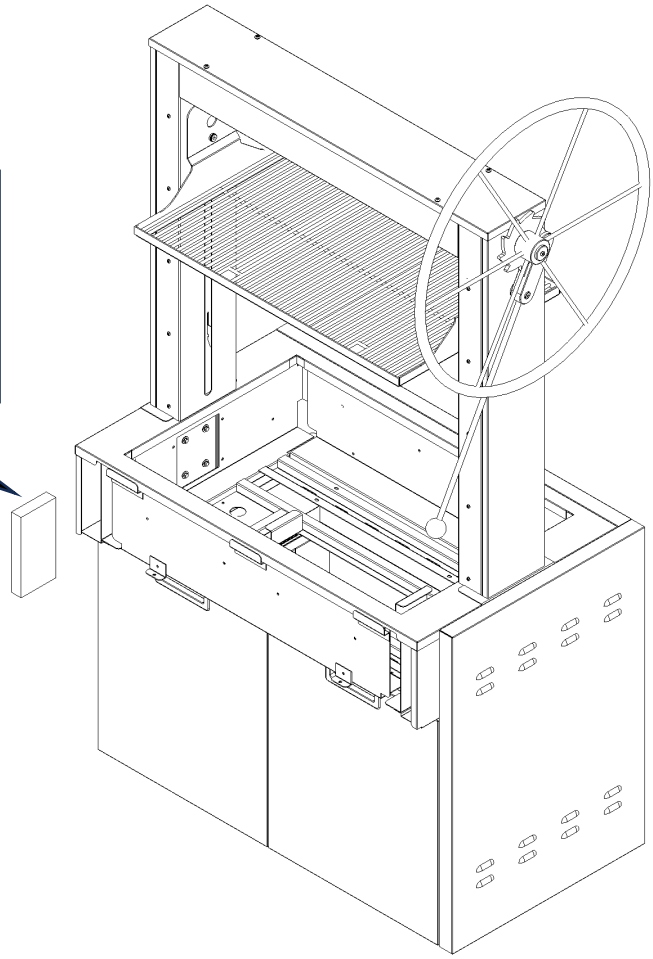

STEP 3: Install the front and rear bricks in the firebox by first installing the upper brick by sliding it up into the channel. Slide the lower brick under the upper brick to hold it in place. There are 8 bricks in the rear and front of the firebox.

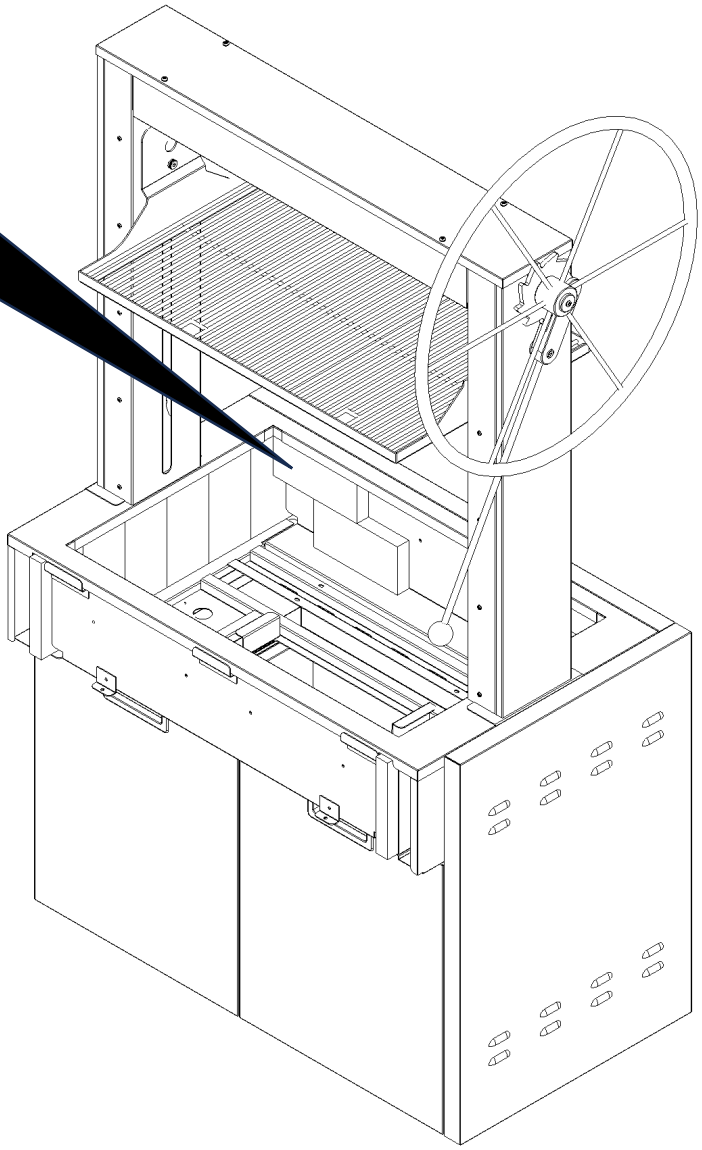

STEP 3: (The tower and grates have been removed from the image for clarity.) Install the bricks on the bottom of the firebox positioning the ash grate in the middle as shown. There are 18 bricks in total.

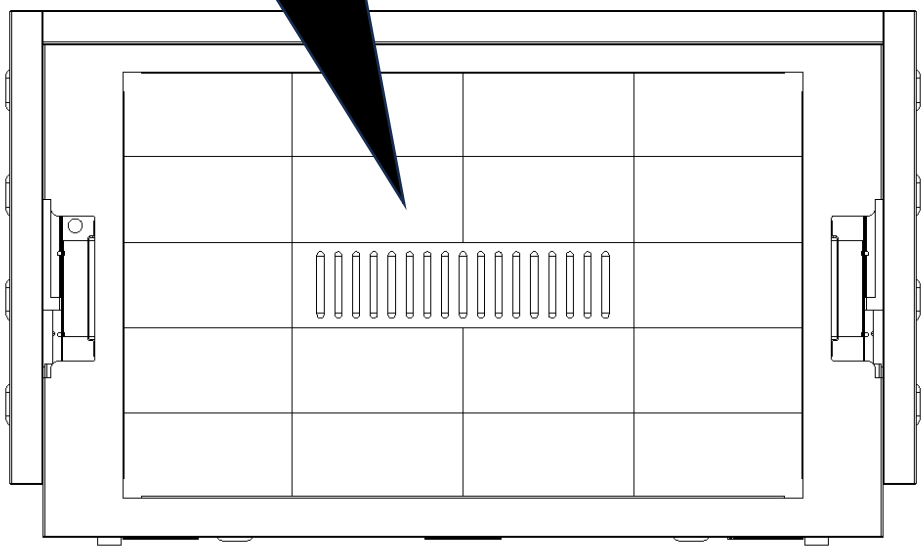

RAISING AND LOWERING THE GRILL SURFACE

WARNING: Use caution when touching the wheel. The wheel can become hot under certain cooking and wind conditions. Insulated gloves are recommended.

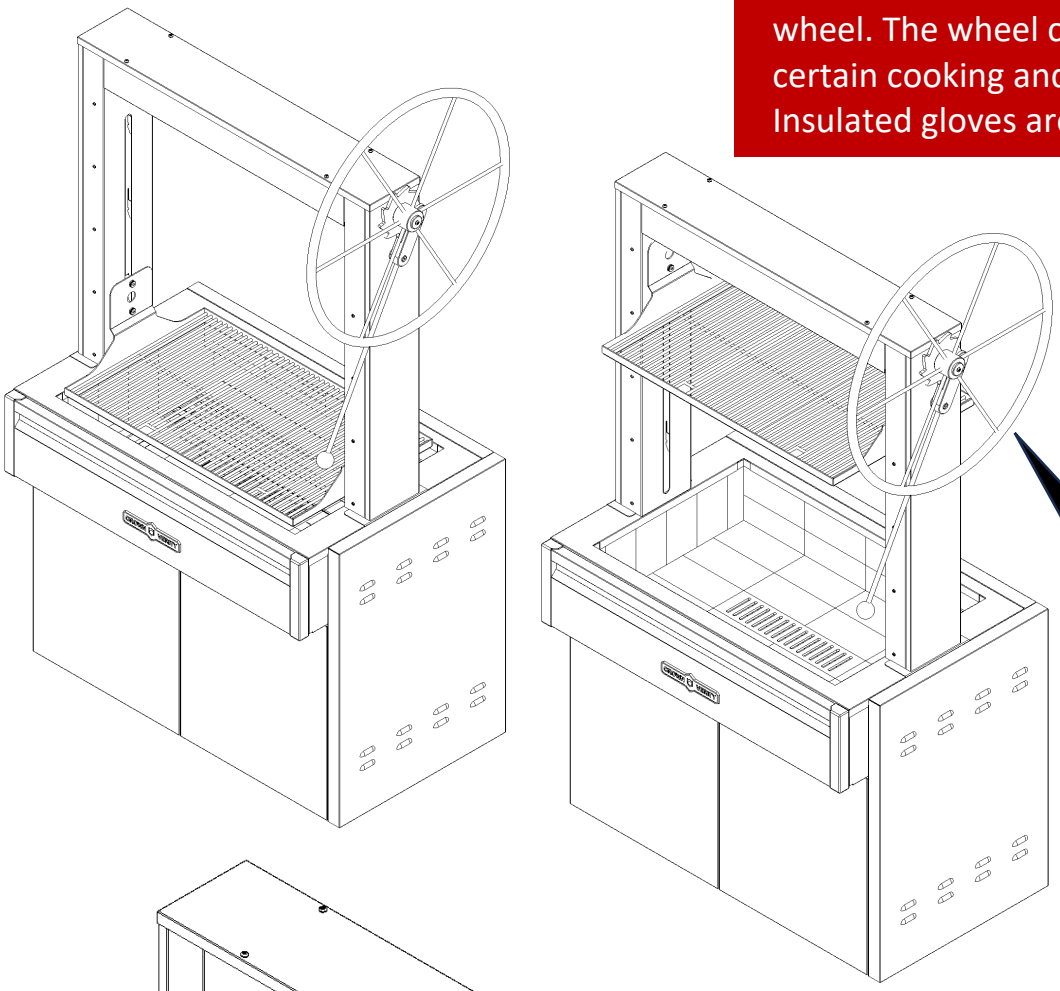

To raise the grilling surface, pull the wheel forward in a in a counterclockwise rotation to the desired height.

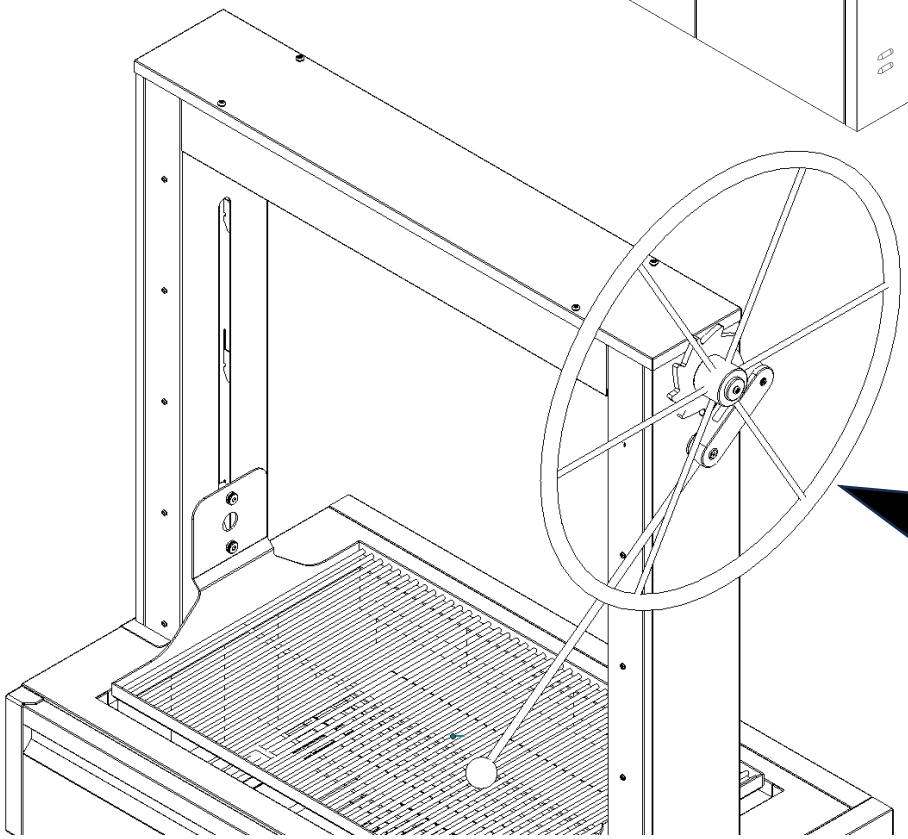

To lower the grilling surface, grasp the wheel firmly with one hand so that it cannot rotate freely. Release the brake mechanism with the other hand and slowly let the wheel rotate in a clockwise direction to the desired height.

Basic Grilling

WARNING: DO NOT LEAVE THE GRILL UNATTENDED

Argentinian Grills get very hot. Use caution when working with the grill and do not leave the grill unattended. Use insulated gloves with a long cuff to protect your hands and forearms from heat.

RECOMMENDED EQUIPMENT

- Leather insulated gloves with long cuffs to protect your hands and forearms.
- Stainless steel brush for cleaning the cooking surfaces.
- Long-handled grill tongs (minimum 18" long).

PREPARING A WOOD FIRE

Placing the Wood in the Firebox: Raise the grill rack to its highest position. The ideal stacked method is to use three layers of wood. Place the first layer so the wood is oriented front to back. Leave space between the wood to allow for air circulation.

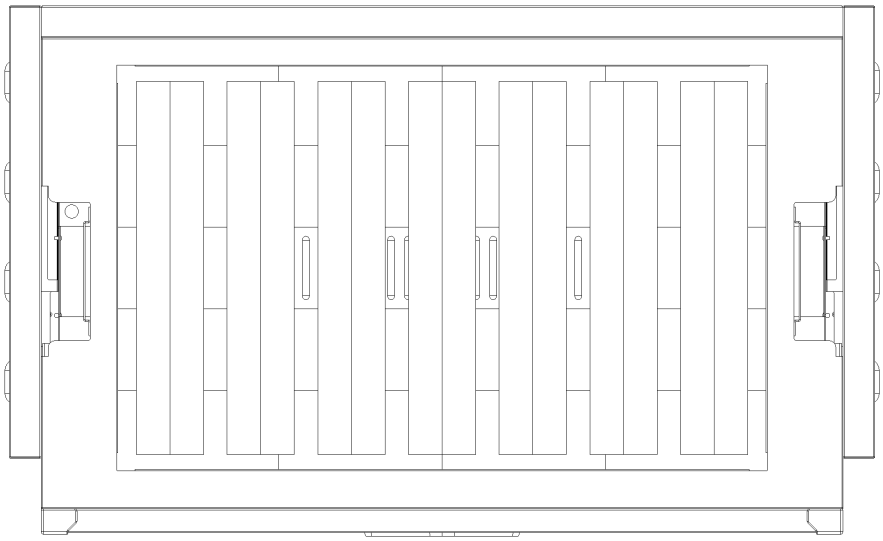

The second layer would be placed perpendicular to the first layer again allowing space for air circulation and.

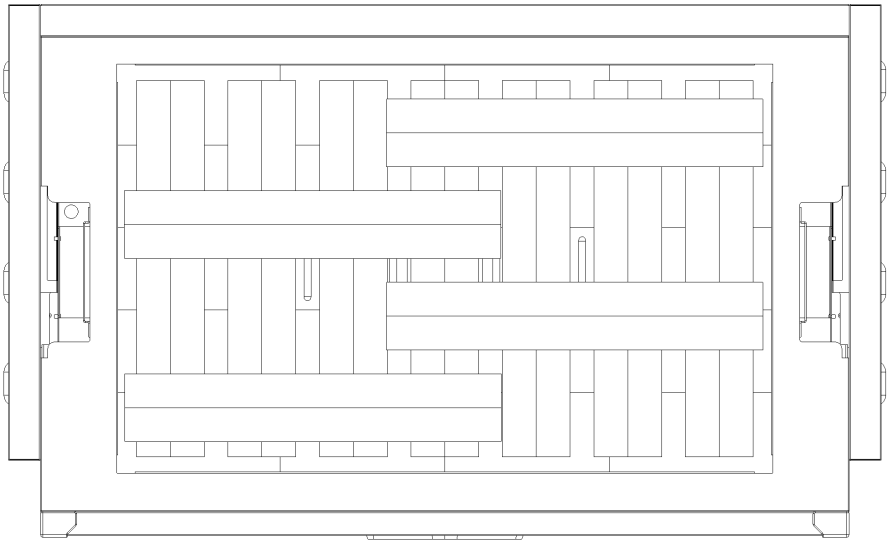

The third layer would be laid in the same orientation as the first.

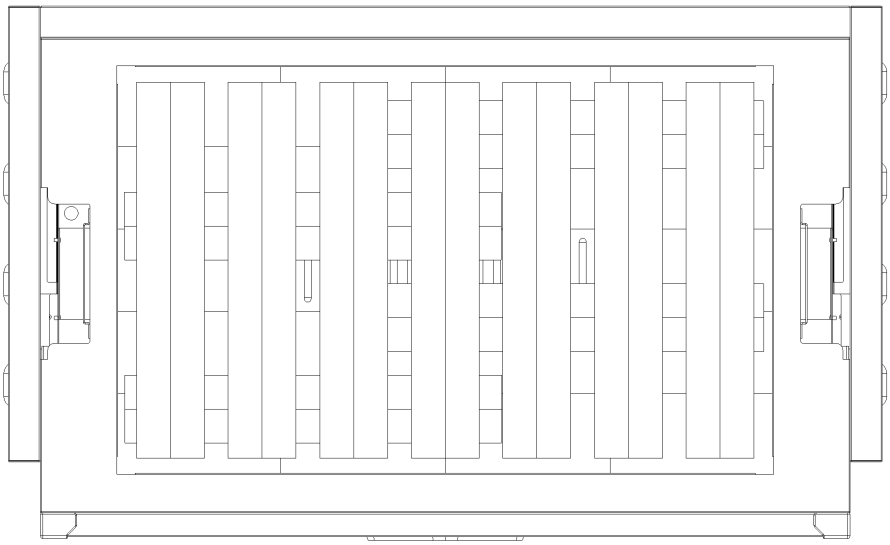

The three layer approach allows the fire to start quickly and will create an even layer of coals as the wood collapses while it burns.

Here are some of the most popular woods used by professional and amateur chefs:

Cherry: Cherry is a very sweet smelling wood, and it has a beautiful light red color. It can be used for smoking, grilling, and baking. It is best suited to use in the summer months because of its light color and low heat output. You can take your portable charcoal BBQ grill to celebrate the new year with your loved ones and cook with cherry wood for delicious food!

Cherry wood is a very popular choice for smoking meat because it imparts a mild flavor that compliments the meat. However, it has a low heat output, so it should not be used for cooking over direct heat.

Apple: Apple is a great choice for smoking and grilling because it adds a sweet, fruity flavor to foods. It's also perfect for beginners who want to try their hand at smoking meat but aren't yet ready to tackle the stronger flavors of hickory or mesquite. Apple has a milder flavor than some other woods, so it doesn't overpower the flavors of your food.

Apple is great for smoking ribs and pork shoulder because they're both long-cooking cuts that benefit from the added sweetness apple provides. The sweet smoke will help keep these cuts moist, too!

Apple is also good for smoking chicken, turkey, fish and vegetables on your Barbeque grill – the same way you might use other milder hardwoods like hickory or mesquite in these applications.

Hickory: Hickory is a popular choice of wood for charcoal grills, as it burns hot and fast. The strong, smoky flavor adds delicious depth to foods like pork and beef.

Hickory is a very hard wood that has to be burned down before you can use it in your grill. This means you have to wait for the logs to reach the right temperature before you can put them on your coals.

You should keep in mind that the weight of the logs, combined with their high density, makes them difficult to handle and store. Hickory is also more expensive than other types of wood, but it is absolutely worth it.

Maple: Maple is a popular choice for many BBQ enthusiasts. It has a mild flavor and low smoke point, adds an additional layer of complexity to any food item, which makes it perfect to use with fish as it won't overpower the flavor. However, maple also has one major drawback: it's not as hard as other woods like hickory or oak. This means that you should be careful about how long you leave your food on the grill – you don't want to burn the meat!

Mesquite: Mesquite is a hardwood that burns hot and long. It can be used to smoke meat and fish, but it also tastes great in coals for grilling. Because this wood has a distinctive flavor, it's best to use mesquite for meats that have strong flavors of their own—beef, pork and chicken work well with this wood. Mesquites are not suitable for smoking vegetables or fish because their high temperature produces too much charring on the outside of those foods while they remain raw inside.

There are many types of wood to choose from when it comes to cooking on an Argentinian Grill. Each one has its own unique flavor and aroma that can be used to create the perfect meal.

COOKING OVER A WOOD FIRE

Do not cook over a roaring fire. Cook over a bed of coals 2 to 3 inches deep, adding pieces of wood at a time as needed to maintain the bed of coals. Place the food on the grill grates and control the intensity of the heat by raising and lowering the grill rack. The closer the food is to the fire, the more intense the heat will be. Food can be brought close to the coals to sear it on the outside and then raised higher to cook to the desired wellness.

COOKING OVER CHARCOAL

The Argentinian Grill can also be used with charcoal. Charcoal can be purchased at most supermarkets. The challenge of using charcoal versus wood is getting it lit and hot so that it starts to generate embers. Once they are lit, the coals will stay hot for hours and simply adding new coal to the fire will ensure a steady supply of new coals. Restaurants favour charcoal because it is usually reliable, and it is easier to find than firewood.

As with cooking over wood, place the food on the grill grates and control the intensity of the heat by raising and lowering the grill rack. The closer the food is to the fire, the more intense the heat will be. Food can be brought close to the charcoal coals to sear it on the outside and then raised higher to cook to the desired wellness.

Caring for Your Grill

STAINLESS STEEL CARE:

The Crown Verity Grills is built from 304 stainless steel, which is a high-quality, non-magnetic stainless steel that is very corrosion resistant. It is also a highly sanitary surface. The stainless steel components of your grill are warranted for life against structural deterioration or failure (See INDEX: "Commercial and Residential Warranty" for further details). With proper care, your grill should last a lifetime. The stainless steel will discolor from the intense heat over time; this condition is normal. Always clean your stainless steel grill with a mild, food-safe, organic degreaser, followed by a stainless steel polish. **ALWAYS SCRUB WITH THE GRAIN, NEVER ACROSS.** Remove all cleaner residue before lighting the grill in order avoid a build-up of film from the cleaner.

POOLS AND CHLORINE: chlorine in the air from pools can also damage 304 Stainless steel over time. Again, the best thing you can do to protect it is to clean it frequently. We recommend cleaning all stainless steel surfaces at least every two weeks to keep your grill in prime condition. When not in use, we recommend that you keep the cover on the appliance.

SALTWATER ENVIRONMENTS: 304 Stainless steel is corrosion resistant but is not impervious to rust in salt-water environments. Exposure to salt air and sea spray will eventually damage the appliance if not cared for properly. The best thing you can do to protect it is to clean it frequently. Don't give the salt time to establish the chemical reaction that contributes to rust. In salt air environments, we recommend cleaning all stainless steel surfaces at least every two weeks to keep your grill in prime condition. When not in use, we recommend that you keep the cover on the appliance.

COOKING GRATE CARE:

Clean the cooking grates with a long-handled brass or stainless brush, or wooden paddle. It is best to do this while the cooking grates are warm to hot.

- Wear long, insulated gloves and use caution when doing so.
- Never drop the cooking grates, as the welds along the rungs can crack.

CLEANING THE ASH TRAY:

WARNING: The ash tray gets extremely hot when the grill oven is operating. Empty the tray only when the grill and bin are completely cool. Empty the ash tray before each use, but always be sure the grill and any leftover wood/embers are completely cool.

Dispose of the ash in an appropriate container and reposition the ash tray ensuring that it is pushed all the way back.

Contacting Crown Verity Customer Care

Before calling Crown Verity Customer Care, please make sure you have the following information:

- Model Number
- Date of purchase
- Proof of purchase by original owner
- Serial number

For warranty service, contact Crown Verity Service Department for an authorized service agent near you at: **(888) 505-7240 or** **service@.crownverity.com**

Contact Crown Verity for replacement parts. Parts are shipped F.O.B Brantford, ON or Bowling Green, KY.

Installation Checklist

Installer should initial next to each item:

- ☐ Specified clearances maintained.
- ☐ Initial assembly completed — all tape and internal packaging removed.
- ☐ Wheel installed.
- ☐ Ash Tray is in place.
- ☐ Cooking grates installed.
- ☐ Raising and lowering of the grill rack is working properly.
- ☐ Customer is fully trained on the proper use of the brake lever.
- ☐ Leave this Manual with the owner.

Please ensure the installer completes the checklist, explaining each item to you. The installer should initial each item above and sign below.

Installer Signature _____ Date _____

Commercial & Residential Warranty

RESIDENTIAL LIMITED WARRANTY TERMS & CONDITIONS

This warranty is limited to products manufactured by Crown Verity Inc., to the original purchaser, commencing on the date of purchase and is valid only with proof of purchase. This warranty page and its coverage only applies to Infinite SeriesTM, Estate SeriesTM and PRO SeriesTM grills. The warranty covers defects in material and workmanship under normal use, providing that:

1. The equipment is properly installed per Crown Verity's Operator's Manual and by a qualified professional installer, including all start-up checks.
2. The equipment has not been accidentally or intentionally damaged, altered, or misused.
3. The serial number rating plate affixed to the equipment has not been intentionally defaced or removed.
4. The equipment is used in a residential application as defined by ANSI Z21.58/CSA 1.6 current versions.

To activate the Crown Verity warranty please visit our warranty registration page https://crownveritycanada.ca/support#faqs This warranty is limited to the original purchaserand cannot be transferred.

WARRANTY COVERAGE

LIMITED WARRANTY

Crown Verity will warrant replacement parts for Canada and the Continental United States for thefollowing period:

Limited Lifetime Warranty: The stainless-steel grill body, stainless steel gas burners and cooking grates are warranted to be free from defects in material and workmanship when subjected to normal domestic use and maintenance for the lifetime of the original purchaser. This warranty excludes surface corrosion,scratches, and discoloration which may occur during normal use. Failure to perform required maintenance will void this warranty.

Limited Six-Year Warranty: The Radiants, Manifolds and Gas valves are warranted to be free from defects in material and workmanship when subjected to normal domestic use and maintenance for six (6) years from theoriginal date of purchase. Failure to perform required maintenance will void this warranty.

Limited One-Year Warranty: For a period of one (1) year from the original date of purchase, Crown Verity will replace, or repairparts found to be defective at no cost to the original purchaser. This includes the cost of shipping replacement parts and, where necessary, service labor at prevailing local rates by a Crown Verityauthorized service person. Service will be provided during normal business hours and must be authorized in advance by Crown Verity.

All non-grill components, such as modular and built-in cabinetry, fall under the Limited One Year Warranty.

WARRANTY LIMITATIONS

The Crown Verity warranty does not apply to damages caused by:

- Negligence.
- Installation or start-up, damages or problems caused by improper installation or use.
- Unauthorized repair by anyone other than a Factory Authorized Service Agent.
- Erratic voltages or gas supply.
- Air and Gas adjustment.
- Damage caused by nature.
- Ordinary wear and tear.
- Display models are sold “as is”. If you have purchased a display model, please be advised that it is sold “as is” and that it is subject to the following warranty exclusions: any exterior or cosmetic damage is non-warrantable; any missing components will be replaced at consumer’s expense; major handling damage to manifold, valve and ignition system will be serviced at consumer’s expense; all other warranties will remain in effect.
- The equipment is properly installed per Crown Verity’s Operator’s Manual and by a qualified professional installer, including all start-up checks.
- The cost of a service call to diagnose complaint.
- Modification to Crown Verity product will void related warranties.

WARRANTY EXCLUSIONS

The Crown Verity warranty does not apply to labor or repairs required for:

- Batteries, fuses, and other wearable items
- Door adjustments and or lid adjustments
- Tightening of screws or fasteners
- Damage in shipment
- Adjustments and cleaning of main burners pilot burners or orifices
- Accessories such as brushes, spatulas, and cylinders
- Normal discoloration of materials
- Units used in a commercial application. Refer to our Commercial Warranty.

COMMERCIAL LIMITED WARRANTY TERMS & CONDITIONS

This warranty is limited to products manufactured by Crown Verity Inc., to the original purchaser, commencing on the date of purchase and is valid only with proof of purchase. The warranty coversdefects in material and workmanship under normal use, providing that:

1. The equipment is properly installed per Crown Verity's Operator's Manual and by a qualified professional installer, including all start-up checks.
2. The equipment has not been accidentally or intentionally damaged, altered, or misused.
3. The serial number rating plate affixed to the equipment has not been intentionally defaced or removed.
4. The equipment is used in a commercial application as defined by ANSI Z83.11/CSA 1.8.

To activate the Crown Verity warranty please visit our warranty registration page. https://crownverity.ca/support#faqs. This warranty is limited to the original purchaser and cannot be transferred.

WARRANTY COVERAGE

LIMITED WARRANTY

Crown Verity will warrant replacement parts for Canada and the Continental United States for thefollowing period:

Limited Lifetime* Warranty: The stainless-steel grill body and cooking grates are warranted to be free from defects in material andworkmanship when subjected to normal domestic use and maintenance for the lifetime of the original purchaser. This warranty excludes surface

corrosion, scratches, and discoloration which may occur during normal use. Failure to perform required maintenance will void this warranty.
* Applies to all grills sold after January 1, 2015 or with a serial number higher than 21010.

Limited Ten-Year Warranty: The stainless steel gas burners are warranted to be free from defects in material and workmanship when subjected to normal domestic use and maintenance for ten (10) years from the original date ofpurchase. Failure to perform required maintenance will void this warranty.

Limited One-Year Warranty: For a period of one (1) year from the original date of purchase, Crown Verity will replace, or repair parts found to be defective at no cost to the original purchaser. This includes the cost of shipping replacement parts and, where necessary, service labor at prevailing local rates by a Crown Verity authorized service person. Service will be provided during normal business hours and must be authorized in advance by Crown Verity. The limited one-year warranty covers Crown Verity Grills, Griddles,Fryers, Steamers, Sinks & Pizza Ovens.

WARRANTY LIMITATIONS

The Crown Verity warranty does not apply to damages caused by:

- Negligence.
- Installation or start-up, damages or problems caused by improper installation or use.
- Unauthorized repair by anyone other than a Factory Authorized Service Agent.
- Erratic voltages or gas supply.
- Air and Gas adjustment.
- Damage caused by nature.
- Ordinary wear and tear.
- Display models are sold “as is”. If you have purchased a display model, please be advised that it is sold “as is” and that it is subject to the following warranty exclusions: any exterior orcosmetic damage is non-warrantable; any missing components will be replaced at consumer’s expense; major handling damage to manifold, valve and ignition system will be serviced at consumer’s expense; all other warranties will remain in effect.
- The equipment is properly installed per Crown Verity’s Operator’s Manual and by a qualifiedprofessional installer, including all start-up checks.
- The cost of a service call to diagnose complaint.
- Modification to Crown Verity product will void related warranties.

WARRANTY EXCLUSIONS

The Crown Verity warranty does not apply to labor or repairs required for:

- Batteries, fuses, and other wearable items
- Door adjustments and or lid adjustments
- Tightening of screws or fasteners
- Damage in shipment
- Adjustments and cleaning of main burners pilot burners or orifices
- Accessories such as brushes, spatulas, and cylinders
- Normal discoloration of materials

Exploded Parts View – IAG36

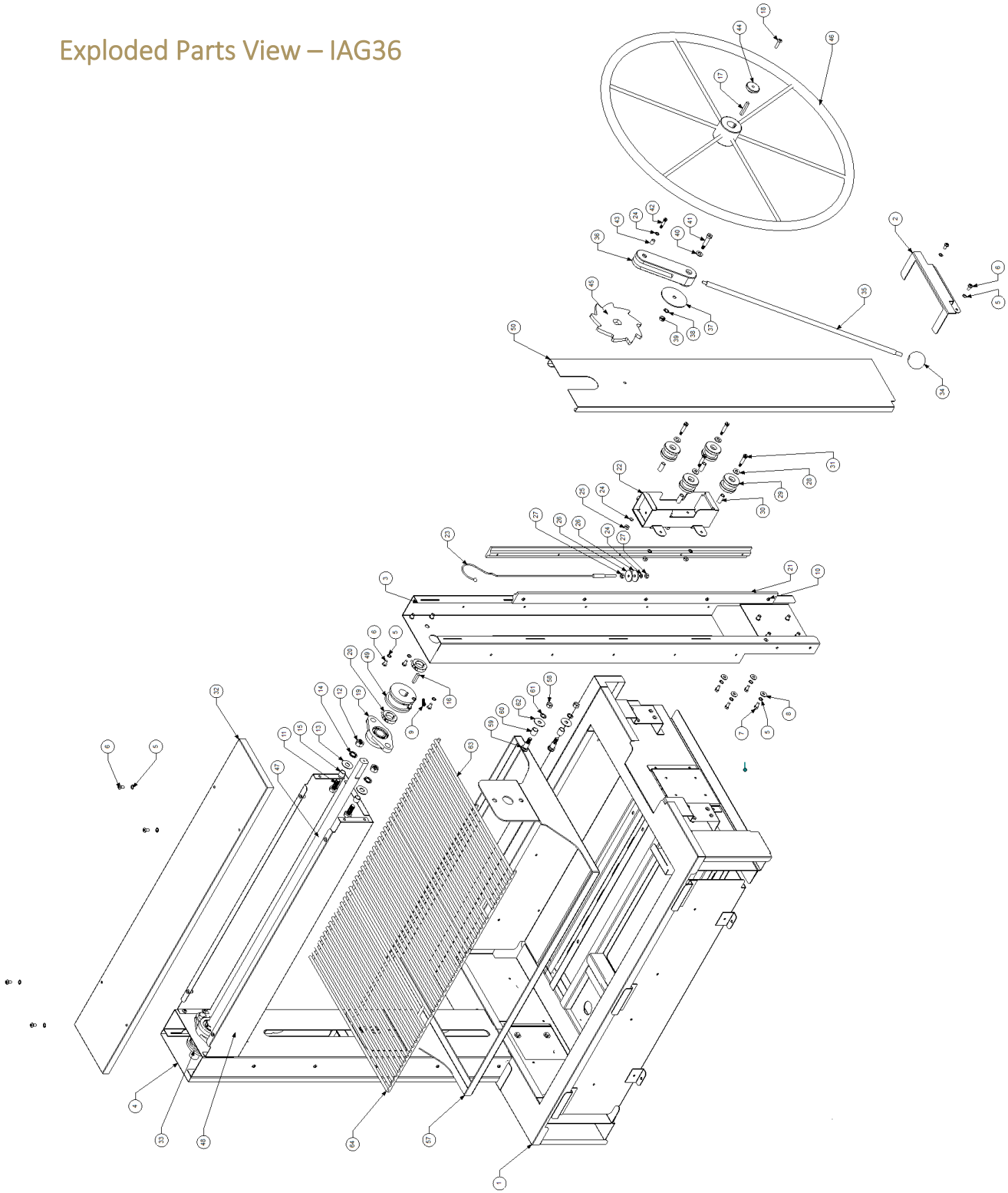

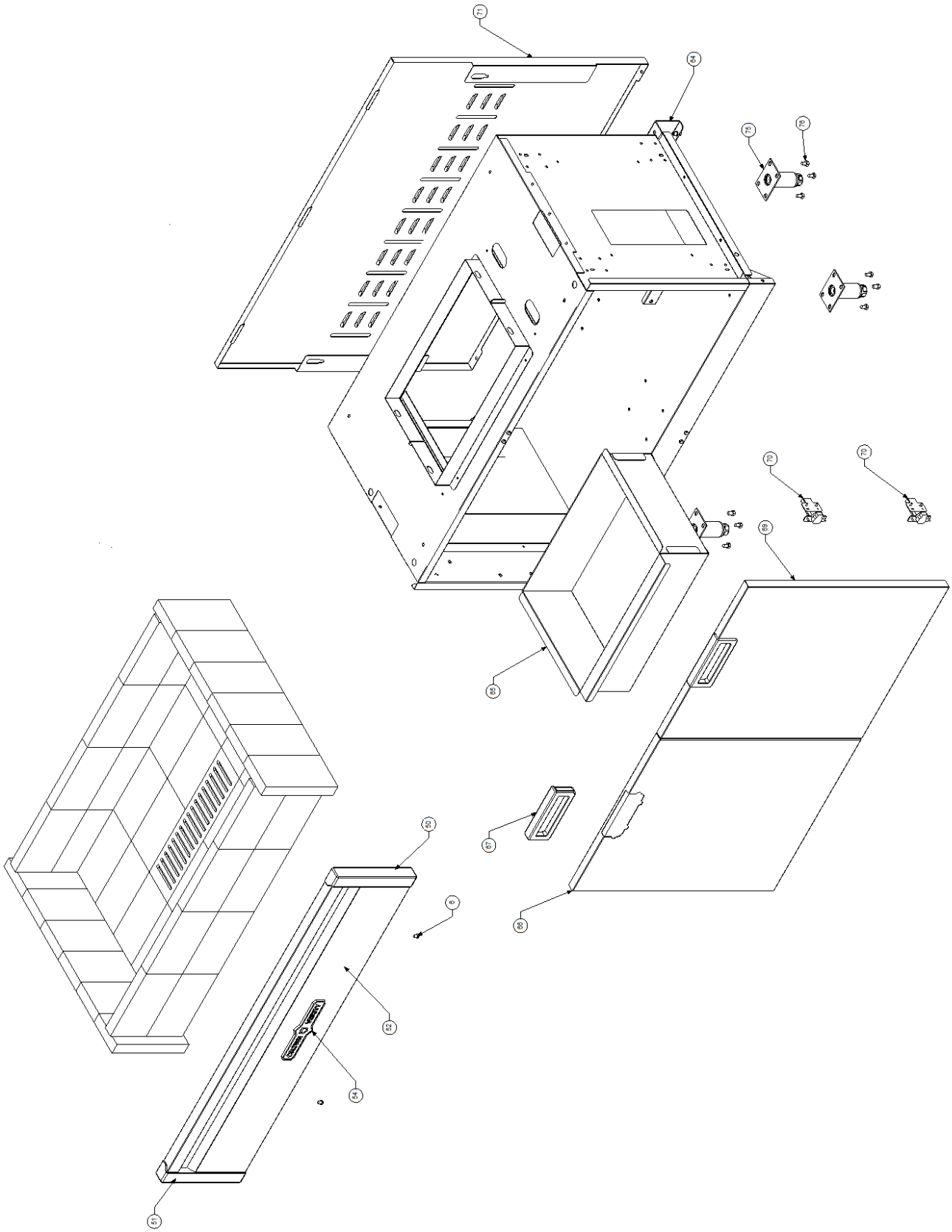
71
64
75
76
70
70
69
65
67
66
50
6
52
54
51

Grill Parts List – IAG36

Item No.	Qty	Part Number	Description
1	1	IAG36-1	36" Fire Box Assembly
2	2	ZCV-IAG-1	Vertical Column Collar
3	2	ZCV-IAG-4	Vertical Column Weld Assembly
4	1	ZCV-IAG-2	Vertical Column Cover
5	26	ZCV-2018	Lock Washer, Internal Tooth, 1/4"
6	4	ZCV-2501	Machine Screw 1/4-20 x 1/2" SS
7	8	ZCV-2026	Hex Cap Screw, 1/4-20x5/8" (Handles)
8	10	ZSC-9216	Washer 1/4 - 20 For PHS-5
9	2	ZCV-1074	Socket Head Screw, 1/4"-20 Thread Size, 3/4" Long
10	20	ZCV-2073	MACHINE SCREW, #10-24x1/2", PAN PHILLIPS (MANIFOLDS)
11	4	ZCV-1075	Hex Head Screw, 1/2"-13 Thread Size, 1-1/4" Long
12	4	ZCV-2022	Hex Nut, 1/2"-13 Thread Size
13	4	ZCV-2146	Washer for 1/2" Screw Size, 0.531" ID, 1.25" OD
14	4	ZCV-1076	Internal-Tooth Lock Washer for 1/2" Screw Size, 0.512" ID, 0.9" OD
15	4	ZCV-1077	Sleeve Bearing for 1/2" Shaft Diameter and 5/8" Housing ID, 1/2" Long
16	2	ZCV-IAG-14	Stainless Steel Machine Key .250 x 1.250
17	1	ZCV-IAG-15	Stainless Steel Machine Key .250 x 1.750
18	1	ZCV-2198	Machine Screw, 1/4-20x7/8", Round-Slot, (Tank Brkt)
19	2	ZCV-1AG-6-2	AMCAN Bearing MUCSFL205-16G
20	4	ZCV-1AG-6-1	AMCAN Shaft Collar SS2SC-16SS
21	4	ZCV-IAG-9	Guide Rail
22	2	ZCV-IAG-5-1	Carrier Body Weld Assembly
23	2	ZCV-IAG-5-3	Lift Cable Assembly
24	11	ZCV-2018	LOCK WASHER, INT. TOOTH, 1/4"
25	8	ZSC-9215	LOCK NUT 1/4 - 20
26	4	ZCV-2019	Fender Washer, 1/4" x 1.25" (Handles)
27	4	ZCV-1071	.250-28 Hex Nut, SS
28	8	ZCV-2012	Flat Washer 5/16" (RD)
29	8	ZCV-IAG-5-2	Carrier Wheel
30	8	ZCV-1073	.3125 x 1.000 MMC Sleeve Bearing
31	8	ZCV-1072	Shoulder Screw, 5/16" Shoulder Dia.1" Shoulder Length
32	1	ZCV-IAG36-3-6	Horizontal Channel Cover
33	1	ZCV-IAG-8	Cable Reel LH
34	1	ZCV-IAG-12-2	Stainless Knob
35	1	ZCV-IAG-12-3	Brake Lever Threaded Rod
36	1	ZCV-IAG-12-4	Brake Lever Swivel

37	1	ZCV-IAG-12-5	Washer Plate 3" Diameter with 5/16 Mounting Hole
38	1	ZCV-2013	LOCK WASHER,5/16", INT. TOOTH (MCB LEGS)
39	1	ZCV-2506	REVERSE LOCK NUT S/S REV LOK 5/16-18
40	1	ZCV-2009	FLAT WASHER, SML. OD, 3/8 ID x .75" OD -- RD'S
41	1	ZCV-1078	Screw, 3/8" Shoulder Diameter, 1-1/4" Shoulder Length, 5/16"-18 Thread
42	1	ZCV-1079	Shoulder Screw, 1/4" Shoulder Diameter, 3/4" Shoulder Length, 1/4"-20 Thread
43	1	ZCV-1080	Sleeve Bearing for 1/4" Shaft Diameter and 3/8" Housing ID, 1/2" Long
44	1	ZCV-IAG-11	Wheel Lock
45	1	ZCV-IAG-10	Gear Brake
46	1	ZCV-IAG-13	30" 6 Spoke Wheel - 1" Straight Shaft
47	1	ZCV-IAG36-3-4	Drive Shaft Wheel Option
48	1	ZCV-IAG36-3-5	Horizontal Channel Weld Assembly No Lights
49	1	ZCV-IAG-7	Cable Reel LH
50	1	ZCV-IAG-3	Vertical Column Cover Wheel
51	1	ZCV-EMC-GB-1002	EMC Face Plate End Cap Asy RH
52	1	ZCV-EMC-GB-1003	EMC Face Plate End Cap Asy LH
53	1	IAG36-1-5-1000-1	IAG36 Front Face No Lights
54	2	.250-20 Rivnut 18 GA	.250-20 Rivnut 18 GA
55	1	ZCV-2003-2016	Name Plate, CV New Logo 2016, Bronze
56	3	ZCV-2016	Retainer Clip, Bronze Name Plate, -- RD'S
57	1	ZCV-IAG36-4-1	Grate Support Weld Assembly
58	4	ZCV-2011	Nut, Full Hex, 3/8"-16
59	4	ZCV-1081	Shoulder Screw, 1/2" Shoulder Diameter, 3/4" Shoulder Length
60	4	ZCV-1082	Sleeve Bearing for 1/2" Shaft Diameter and 5/8" Housing ID, 5/8" Long
61	4	ZCV-2010	Lock Washer, Internal Tooth, 3/8"
62	4	ZCV-1083	Washer 0.406" ID, 1.250" OD, 0.043"-0.057" Thick
63	1	ZCV-2170	Grate, Cooking, 12", MCB
64	1	ZCV-2150	Grate, Cooking, 22", MCB
65	1	ZCV-IAG36-2-1	IAG36 Cabinet Weld Assembly
66	1	ZCV-IAG36-2-2	IAG36 Ash Tray, Modular, Metal Components
67	1	ZCV-EMC-BC42-5-1000	BC42 Hinged Vertical Door LH Weld Asy
68	2	ZCV-EMC-DH2	Cast Handle Assembly Small
69	2	ZCV-4001	Hinge 9238 Inlay
70	1	ZCV-EMC-BC42-2-1000	BC42 Hinged Vertical Door RH Weld Asy
71	2	ZCV-4001	Hinge 9238 Overlay
72	1	ZCV-EMC-BC42-4	SEE SHEET 2
73	4	Rubber Bumper A0759	Rubber Bumper A0759
74	2	ZCV-2029	Front Shelf Mounting Bolt, SS -- (RFS) - Shorter Thread
75	2	ZCV-2026	HEX CAP SCREW, 1/4-20x5/8" (HANDLES)

76	4	ZCV-4000	SS304 - Adjustable Leg 100-160mm
77	16	ZSC-2078	Hex Cap Screw, 5/16-18 X 1/2", Zinc (PHS)

Exploded Parts View – IBIAG36 (Shell only)

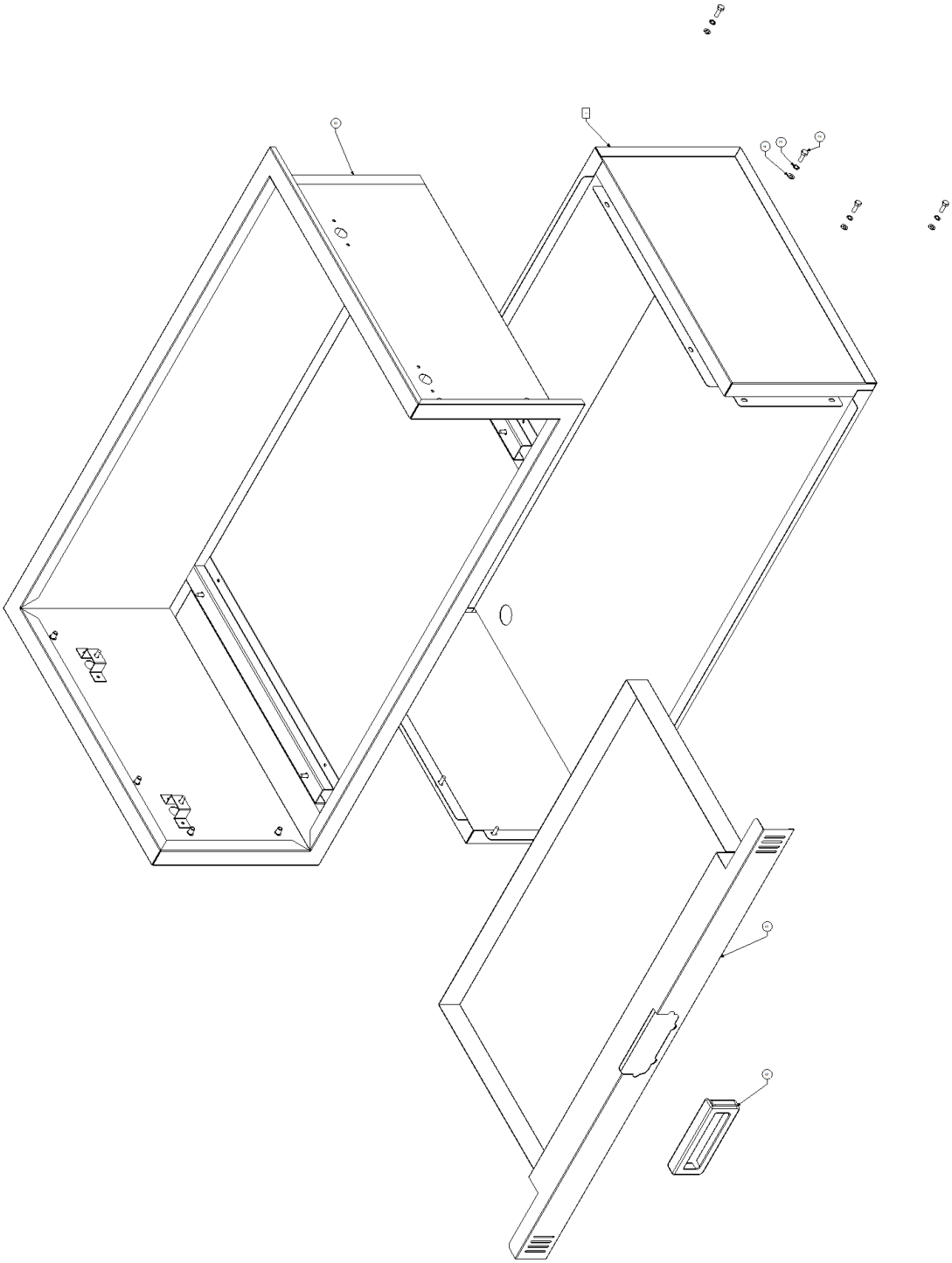

Grill Parts List – IBIAG36 (Shell Only)

Item No.	Qty	Part Number	Description
1	1	IAG36-7-3-1000	IAG36 Built-In Shell Insulating Jacket Weld Assembly
2	16	ZCV-2026	Hex Cap Screw, 1/4-20x5/8" (Handles)
3	16	ZCV-2018	Lock Washer, Internal Tooth, 1/4"
4	16	ZSC-9216	Washer 1/4 - 20 For PHS-5
5	1	IAG36-7-1-1000	IAG36 Built-In Ash Drawer
6	1	ZCV-EMC-DH2	Cast Handle Assembly Small
8	1	IAG36-7-2	IAG36 Built-In Shell Weld Assembly