PRORUN®

GAS///

OPERATOR'S MANUAL

PUSH MOWER

MODEL: PLM19621L

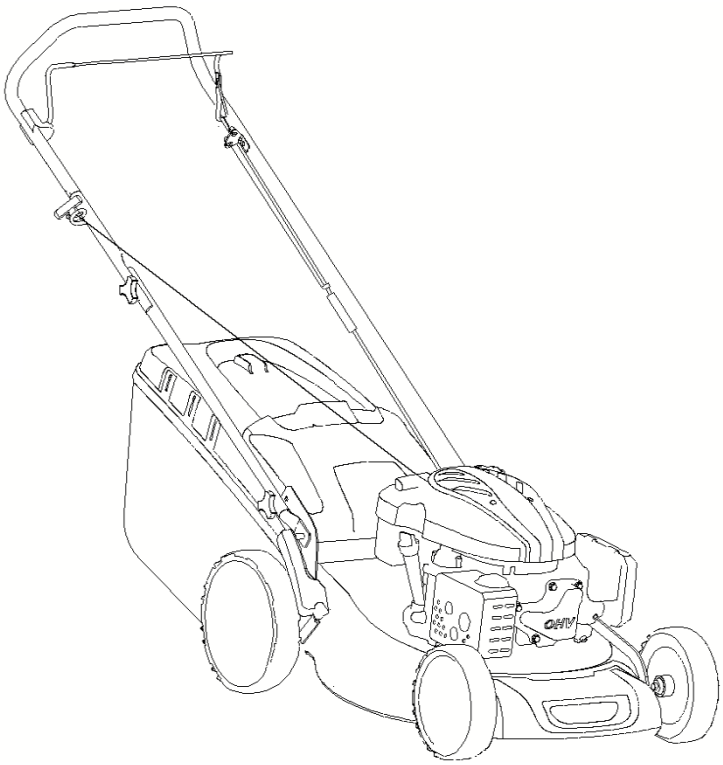

IMPORTANT! ENGINE REQUIRES OIL BEFORE OPERATION

Everything PRORUN

Before using, read the instructions.

⚠ **IMPORTANT – READ CAREFULLY BEFORE USE.**

⚠ **IMPORTANT SAFETY INSTRUCTIONS – SAVE THESE INSTRUCTIONS**

WARNING: To reduce the risk of injury, the user must read and understand the User manual before using this product. Keep these instructions for future reference.

Please let us know what you think. To leave a comment and see our complete product line,

Visit:

PRORUNTOOLS.COM ★★★★★

1-844-905-0882, info@proruntech.com

Version: A – Issue Date: 11/10/2025

1. PRODUCT SPECIFICATION

Model	PLM19621L
Engine Type	LC1P70FC (196CC)
Nominal power kW/2900rpm	3.0Kw
Self-Propelled	No
Blade identification	20087159
Blade Width	53 mm 2.09 inches
Blade Length	21 mm 0.87 inches
Rated Speed	2900min
Grass catcher capacity	65L
Spark Plug	270960025-0001
Oil Filter	170870094-0001
Height adjustment:	25~75 mm 0.98~2.95 inches 7 position
Weight	37.6kg
Gross Weight	40.8kg
Tank Volume L	1.5lbs
Oil capacity	0.55L
Recommended Oil	10W-30 Varying Temps SAE30 Warmer Temps
Variable speed mower km/h	2.8kmph - 3.8kmph
Non-variable self-propelled speed km/h	N/A
Sound Pressure Level at the operator's position (According to EN ISO 5395-1 Annex F & EN ISO 5395-2, EN ISO 4871)	84.7db(A) K =3 K db(A)
Measured sound power level Guaranteed sound power level (According to 2000/14/EC)	96.9 db(A) K =1.28 db(A) 98 db(A)
Vibration (According to EN ISO 5395-1 Annex G & EN ISO 5395-2)	4.28/4.59 m/S (left /right handle)

2. TABLE OF CONTENTS

1. PRODUCT SPECIFICATION 2
2. TABLE OF CONTENTS 3
3. SYMBOLS 4
4. IMPORTANT SAFETY INSTRUCTIONS 5
5. PARTS DESCRIPTION 10
6. ASSEMBLY 12
7. “3 IN 1” FEATURE DESCRIPTION 14
8. OPERATING INSTRUCTIONS 16
9. LAWN MOWER MAINTENANCE 20
10. LUBRICATION INSTRUCTIONS 22
11. CLEANING 23
12. STORAGE INSTRUCTIONS 25
13. TROUBLE SHOOTING 26
14. EXPLODED VIEW AND PARTS LIST 27

3. SYMBOLS

	**Read the User's Manual** It is important that you read, fully understand and observe the following safety precautions and warnings. Read the instruction manual and the safety precautions periodically.
 	**Beware of Thrown Objects** Watch out for thrown objects and ricochets to reduce the risk of serious or fatal injury to the operator or bystanders. **Keep Bystanders Away** Keep the area of operation clear of all people, particularly small children. The distance between the machine and bystanders shall be at least 50 feet (15m).
	**Keep Bystanders Away** Keep the area of operation clear of all people, particularly small children.
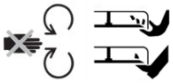	**Keep hands and feet away from the blades** Beware of sharp blades. The blade can still be moved even though the power is switched off.
	**Wear Eye and Ear Protection** To reduce the risk of injury to you, always wear safety goggles or safety glasses, sound barriers when operating this product.
	**Steep Slope Hazard** Exercise extreme caution when operating on slopes.

4. IMPORTANT SAFETY INSTRUCTIONS

⚠WARNING! When using petrol tools, basic safety precautions, including the following, should always be followed to reduce the risk of serious personal injury and/or damage to the unit. Read all these instructions before operating this product and retain these instructions for future reference.

⚠WARNING! This machine can amputate hands and feet and throw objects. Failure to observe the following safety instructions could result in serious injury or death.

GENERAL INFORMATION

- Read, understand, and follow instructions and warnings in this manual and on the machine, engine and attachments.
- Only allow operators, who are responsible, trained, familiar with the instructions, and physically capable of operating the machine.
- Do not carry passengers and keep bystanders away.
- Do not operate the machine while under the influence of alcohol or drugs.
- Follow the manufacturer's recommendation for wheel weights or counterweights.

PREPARATION BEFORE OPERATING

- Clear the operating area of any objects which could be thrown by or interfere with operation of the machine.
- Keep the area of operation clear of all bystanders, particularly small children. Stop the machine and attachment(s)if anyone enters the area.
- Do not operate the machine without the entire grass catcher, discharge chute. or other safety devices in place and functioning properly. Check frequently for signs of wear or deterioration and replace as needed.
- Wear appropriate personal protective equipment such as safety glasses, hearing protection, and footwear.
- Need to keep bystanders away when mowing.
- While mowing, always wear substantial footwear and long trousers. Do not operate the equipment when barefoot or wearing open sandals.
- Thoroughly inspect the area where the equipment is to be used and remove all objects, such as stones, toys, sticks and wires, which can be thrown by the machine.
- **WARNING- Petrol is highly flammable.**
    - store fuel in containers specifically designed for this purpose.
    - refuel outdoors only and do not smoke while refueling.
    - add fuel before starting the engine. Never remove the cap of the fuel tank or add petrol while the engine is running or when the engine is hot.

  - if petrol is spilled, do not attempt to start the engine but move the machine away from the area of spillage and avoid creating any source of ignition until petrol vapors have dissipated.
  - replace all fuel tank and container caps securely.
- Replace faulty silencer.
- Before using, always visually inspect to see that the blades, blade bolts and cutter assembly are not worn or damaged. Replace worn or damaged blades and bolts in sets to preserve balance.

OPERATION

- Only operate the engine in well-ventilated areas. Exhaust gases contain carbon monoxide, a deadly poison.
- Only operate the machine in daylight or good artificial light.
- Avoid holes, ruts, bumps, rocks, or other hidden hazards. Uneven terrain could overturn the machine or cause operators to lose their balance or footing.
- Do not put hands or feet near rotating parts or under the machine. Keep clear of the discharge always opening.
- Do not direct discharge material toward anyone. Avoid discharging material against a wall or obstruction. Material may ricochet back toward the operator. Stop the blade(s) when crossing gravel surfaces.
- Do not leave a running machine unattended. Always Park on level ground, disengage the attachment. set parking brake, and stop engine
- Do not mow in reverse unless necessary. Always look down and behind before and while backing.
- When moving, wear glasses, earmuffs, tight long-sleeved trousers, non-slip boots and other warning words.
- Do not operate the engine in a confined space where dangerous carbon monoxide fumes can collect.
- Warning! Do not use the lawnmower when there is a risk of lighting.
- In addition to limiting the use time, there are also earmuffs. Gloves can reduce the harm of machine noise vibration to the human body.
- Be careful when using the lawnmower in slopes and near drop-offs, ditches or embankments.
- Mow only in daylight or in good artificial light.
- Avoid operating the equipment in wet grass, where feasible.
- Always be sure of your footing on slopes.
- Walk, never run.
- For wheeled rotary machines, mow across the face of slopes, never up and down.
- Exercise extreme caution when changing direction on slopes.
- Do not mow excessively on steep slopes.
- Use extreme caution when reversing or pulling the lawn mower towards you.

- Stop the blade(s) if the lawn mower has to be tilted for transportation when crossing surfaces other than grass, and when transporting the lawn mower to and from the area to be mowed.
- Never operate the lawn mower with defective guards, or without safety devices, for example deflectors and/or grass catchers, in place.
- Caution: The lawnmower shall not be operated without either the entire grass catcher or self-closing discharge opening guard in place.
- Do not change the engine governor settings or overspeed, the gasoline engine rotate speed is 2900±100 r/min.
- Do not alter or tamper with any sealed adjustment for the engine speed control.
- The lawnmower safety systems or features shall not be tampered with or disabled.
- Start the engine carefully according to instructions and with feet well away from the blade(s).
- Do not tilt the lawn mower when starting the engine.
- Do not start the engine when standing in front of the discharge chute.
- Do not put hands or feet near or under rotating parts. Keep clear of the discharge opening at all times.
- Never pick up or carry a lawn mower while the engine is running.
- Stop the engine and disconnect the spark plug wire, make sure that all moving parts have come to a complete stop and, where a key is fitted remove the key.
  - before clearing blockages or unclogging chute.
  - before checking, cleaning or working on the lawn mower.
  - after striking a foreign object. Inspect the lawnmower for damage and make repairs before restarting and operating the lawn mower.
  - If lawn mower starts to vibrate abnormally (check immediately).
- Stop the engine and disconnect the spark plug wire, make sure that all moving parts have come to a complete stop and, where a key is fitted remove the key.
  - Whenever you leave the lawn mower.
  - Before refueling.

CHILDREN SPECIFIC

- Tragic accidents can occur if the operator is not alert to the presence of children. Children are often attracted to machines and mowing activity. Never assume that children will remain where you last saw them.
- Keep children out of the operating area and under the watchful care of a responsible adult other than the operator.

SLOPE SPECIFIC

Slopes are a major factor in lawn mower-related accidents. Operating on slopes requires extra caution to prevent loss of control and injury

- Travel in the manufacturer recommended direction on slopes. Use caution while operating near drop-offs.

- Do not operate machine under any condition where traction, steering, or stability is in question. Tires could slide even if the wheels were stopped.
- Always keep the machine in gear when going down slopes. Do not coast downhill.
- Avoid starting and stopping on slopes. Avoid making sudden changes in speed or direction. Make turns slowly and gradually.
- Use extra care while operating machine with a grass catcher or other attachment(s), They can affec6the stability of the machine.

FIRE AND FUEL SPECIFIC

- Extinguish all cigarettes, cigars, pipes and other sources of ignition.
- Use only an approved fuel container.
- Do not remove fuel caps or add fuel with the engine running or while hot.
- Do not refuel indoors or in enclosed spaces.
- Do not store the machine or fuel container, or refuel, where there is an open flame, spark, or pilot light such as on a water heater or other appliance.
- If fuel is spilled, do not attempt to start the engine and avoid creating any source of ignition until fuel vapors have dissipated.
- To help prevent fires: keep machine free of grass, leaves, or other debris build up; clean up oil or fuel spillage and remove any fuel-soaked debris; allow machine to cool before storing.
- Use extra care in handling gasoline and other fuels. They are flammable and vapors are explosive.

HAULING

- Use full-width ramps when loading or unloading the machine for transport.

SERVICE

- Keep the machine in good working condition. Replace any worn or damaged parts promptly to ensure safe operation.
- Use caution when servicing blades. Wrap the blade(s) or wear protective gloves to prevent injury. Replace any damaged blades—do not attempt to repair or modify them.
- Machines with hydraulic pumps, hoses, or motors; and/or diesel injection systems:
  ⚠ WARNING! Fluid escaping under pressure may have enough force to penetrate the skin and cause serious injury. If fluid is injected into the skin, seek immediate medical attention. Keep your body and hands away from pinholes or nozzles that eject fluid under high pressure. If a leak occurs, have the machine serviced immediately by a trained technician.
- If equipped, disconnect the spark plug wire(s) and the negative battery cable before performing any repairs or maintenance.

MAINTENANCE AND STORAGE

- Keep all nuts, bolts, and screws tightened to ensure the equipment remains in safe working condition.
- Never store the equipment with petrol in the tank inside a building where fuel fumes could reach an open flame or spark.
- Allow the engine to cool before storing the machine in any enclosure. Clean and maintain the lawn mower thoroughly before storage.
- To reduce the risk of fire, keep the engine, muffler, battery compartment, and fuel storage area free of grass, leaves, and excessive grease.
- Check the grass catcher frequently for signs of wear or deterioration and replace it if necessary to maintain safe operation.
- Replace worn or damaged parts immediately to maintain safety.
- Drain the fuel tank outdoors to prevent exposure to hazardous fumes.
- Improper maintenance, use of non-conforming replacement parts, or modification of safety components can seriously damage the lawnmower and cause severe injury to the operator.
- Always use manufacturer-recommended blades and spare parts. Using non-genuine components can damage the lawnmower and pose a serious risk to the operator. Regular maintenance is essential to keep the machine in safe working conditions.
- If the blade stopping mechanism is not functioning properly, contact the service center for assistance immediately.

⚠WARNING! Never touch the rotating blade.

⚠WARNING! Refuel only in a well-ventilated area, and always ensure the engine is turned off before doing so.

⚠WARNING! If the mower is electrically started, remove the key after use to prevent accidental startup.

5. PARTS DESCRIPTION

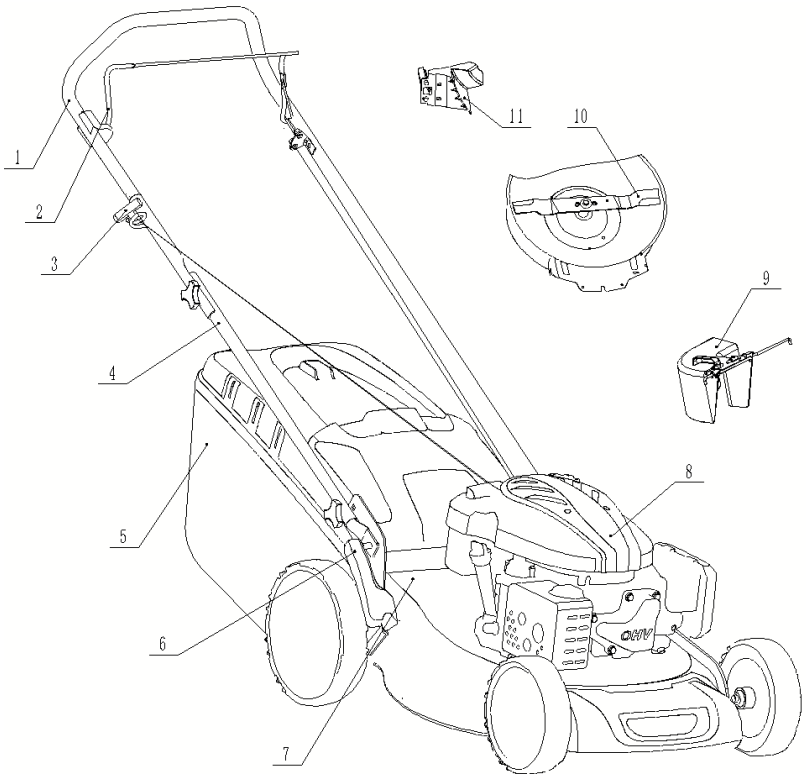

#	ITEM
1.	UPPER HANDLE
2.	DRIVE LEVER
3.	STARTER HANDLE
4.	LOWER HANDLE
5.	GRASS CATCHER
6.	HEIGHT ADJUSTING LEVER
7.	DECK
8.	GASOLINE ENGINE
9.	REAR GRASS DEFLECTOR
10.	BLADE
11.	CHUTE FLAP

5.1 UNPACKING

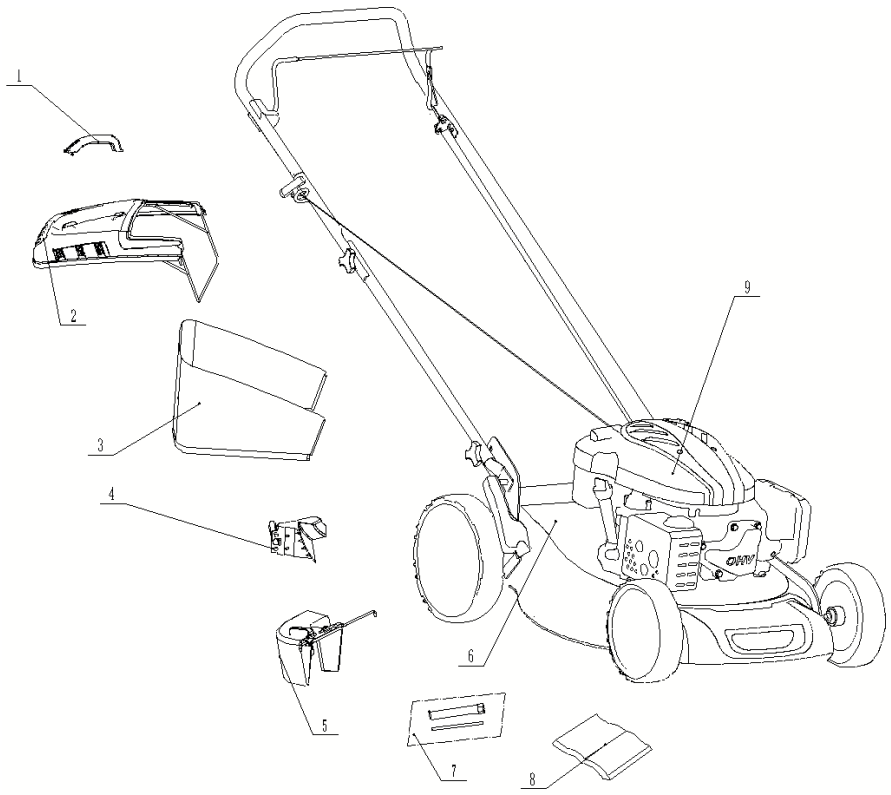

#	ITEM
1.	HANDLE OF GRASS CATCHER
2.	COVER OF CATCHER BAG
3.	GRASS COLLECT BAG
4.	GRASS BLOCKING COVER
5.	REAR GRASS DEFLECTOR
6.	SPARK PLUG TOOL
7.	INSTRUCTION MANUAL
8.	LAWN MOWER

6. ASSEMBLY

6.1 FOLDING HANDLE

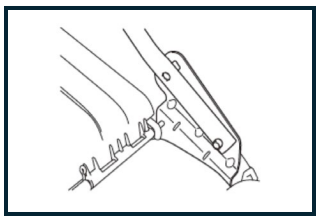

FIG 2A

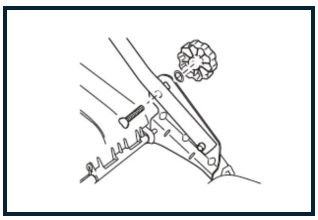

FIG 2B

1. Secure the lower handlebars to the unit body using the bolt, washer, and locking knob as shown in Figures 2A and 2B.

6.2 FIXING THE UPPER HANDLE

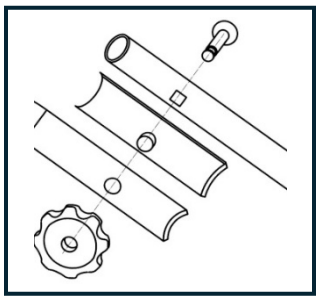

FIG 3A

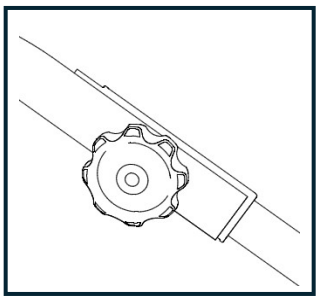

FIG 3B

1. Insert the bolts through the upper and lower handlebars and the insulating sleeve in sequence, as shown in Figure 3A.
2. Tighten the knob to securely connect the upper and lower handlebars, as shown in Figure 3B.

6.3 MOUNTING AND DISMOUNTING THE CRASS CATCHER

1. To install the grass catcher, lift the rear discharge guard and fit the catcher as shown in Figures 4A, 4B, and 4C.
2. To remove the grass catcher, lift the rear discharge guard and pull out the catcher.

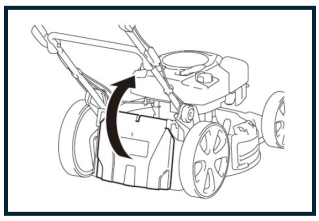

FIG 4A

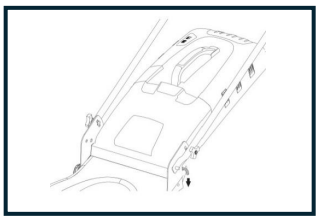

FIG 4B

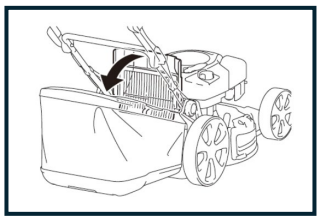

FIG 4C

6.4 STARTER HANDLE

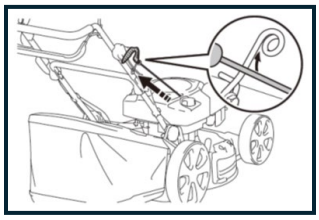

FIG 5

Move the starter handle from the engine to the rope guide, as shown in Figure 5.

6.5 HEIGHT OF CUT

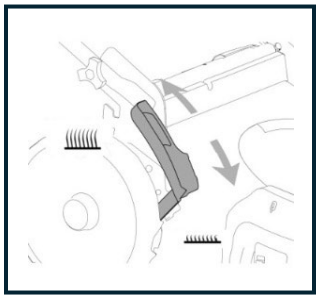

FIG 6A

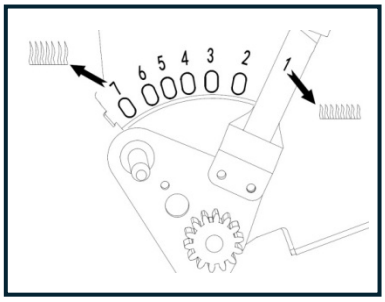

FIG 6B

To adjust the height, apply outward pressure to disengage the lever from the rack. Then, move the lever forward or backward to the desired position, as shown in Figures 6A and 6B.

7. “3 IN 1” FEATURE DESCRIPTION

7.1 GRASS COLLECTOR FUNCTION:

7.1.1 Lift the rear discharge guard and assemble the grass catcher, as shown in Figures 7A and 7B.

7.1.2 Make sure the side discharge guard is lowered and securely blocked by the safety lever, as shown in Figure 7C.

7.1.3 Start the engine and begin operation.

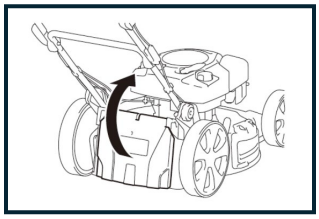

FIG 7A

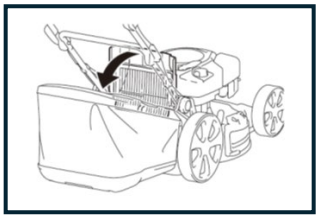

FIG 7B

7.2 MULCHING FUNCTION

7.2.1 Lift the rear discharge guard, assemble the chute flap, and then close the rear discharge guard as shown in Figures 8A/B/C

7.2.2 Start the gasoline engine and go to work.

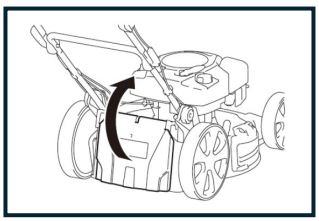

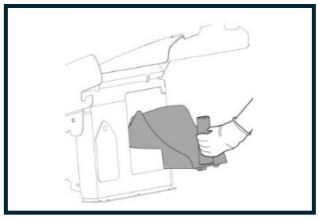

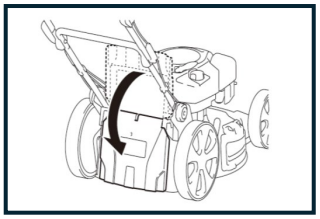

7.3 REAR DISCHARGE FUNCTION

7.3.1 Assembled the rear deflector Assy Figure 9A

7.3.2 Open the rear cover to the maximum angle Figure 9B

7.3.3 Install the rear grass deflector assy into the slots of the left and right supports and lower the rear cover afterwards Figure 9C

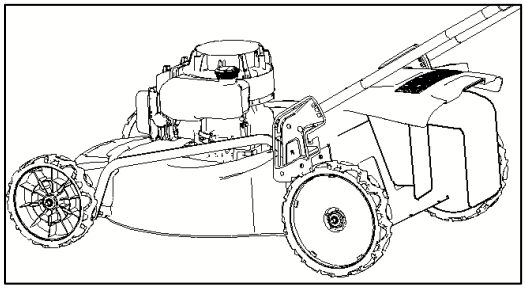

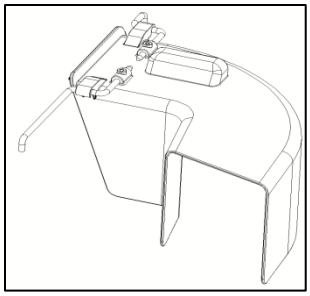

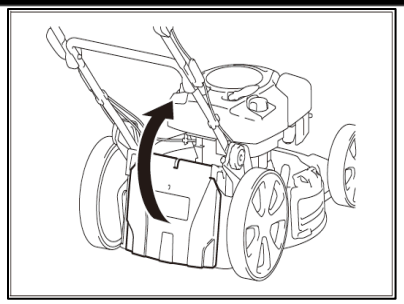

Fig.9A **Fig.9B** **Fig.9C**

WARNING! These operations must be performed with the engine turned off.

8. OPERATING INSTRUCTIONS

8.1 BEFORE STARTING

⚠CAUTION! This engine is shipped from factory without oil. Check oil level before starting engine. If you start the engine without oil, the engine will be damaged beyond repair and will not be covered under warranty.

- Check the engine oil level with the engine turned off and the vehicle positioned on a level surface. See Figures 10A, 10B, and 10C.
- Remove the oil filler cap or dipstick and wipe it clean with a lint-free cloth.
- Insert the oil filler cap or dipstick into the oil filler neck as shown, without screwing it in, then remove it to check the oil level. If the oil level is near or below the lower limit mark on the dipstick, add the recommended oil until the level reaches the upper limit mark, being careful not to overfill. Finally, reinstall the oil filler cap or dipstick securely.

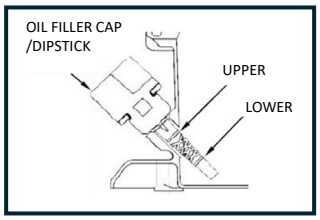

FIG 10A

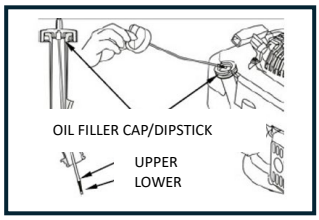

FIG 10B

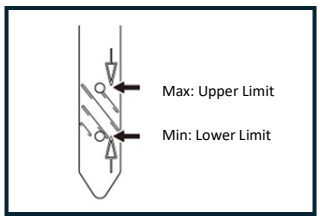

FIG 10C

WARNING! Petrol is highly flammable.

- Store fuel in containers specifically designed for this purpose.
- Refuel outdoors only, before starting the engine and do not smoke while refueling or handling fuel.
- Never remove the cap of the fuel tank or add petrol while the engine is running or when the engine is hot.
- If petrol is spilled, do not attempt to start the engine but move the machine away from the area of spillage and avoid creating any source of ignition until petrol vapors have dissipated.
- Replace all fuel tanks and container caps securely.
- Before tipping the lawn mower to maintain the blade or drain oil, remove fuel from tank.

8.2 TO START ENGINE

- When starting cool engine please press the air pump 1 to 3 times Figure 11A
- Pull the engine brake lever towards the handle Figure 11B

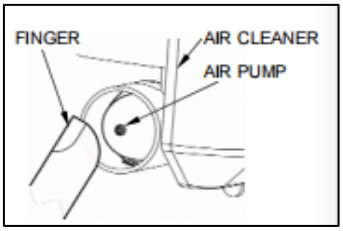

Figure 11A

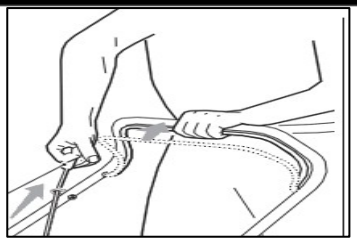

Figure 11B

Special Reminder

- Press the air pump 1-3 times when you are starting the cold engine.
- If the start of the hot engine after work can be started directly, dot does not press the air pump or press the air pump once.

8.3 TO STOP ENGINE

- Release the brake lever to stop the engine and blade. (Fig.13)
- Disconnect and ground the spark plug wire as instructed in the separate engine manual to prevent accidental starting while equipment is unattended.

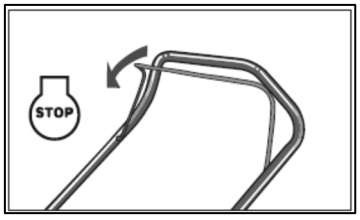

⚠ CAUTION! Your mower is designed to cut normal residential grass of a height no more than 250mm.
Do not attempt to mow through unusually tall dry or wet grass (e.g., pasture) or piles of dry leaves. Debris may build up on the mower deck or contact the engine exhaust presenting a potential fire hazard.

8.4 FOR THE BEST RESULTS WHEN MOWING

Clear lawn of debris. Be sure that the lawn is clear of stones, sticks, wire or other foreign objects which could be accidentally thrown out by the mower in any direction and cause serious personal injury to the operator and others as well as damage to property and surrounding objects. Do not cut wet grass. For effective mowing do not cut wet grass because it tends to stick to the underside of the deck preventing proper mowing of the grass clippings. Cut no more than 1/3 the length of the grass. The recommended cut for mowing is 1/3 the length of the grass. Ground speed will need to be adjusted so the clippings can be dispersed evenly into the lawn. For especially heavy cutting in thick grass, it may be necessary to use one of the slowest speeds in order to get a clean well mowed cut. When mowing long grass, you may have to cut the lawn in two passes, lowering the blade another 1/3 of the length for the second cut and perhaps cutting in a different pattern than was used the first time. Overlapping the cut a little on each pass will also help to clean up any stray clippings left on the lawn. The mower should always be operated at full throttle to get the best cut and allow it to do

the most effective job of mowing. Clean underside of deck. Be certain to clean the underside of the cutting deck after each use to avoid a build-up of grass, which would prevent proper mulching. Mowing leaves. The mowing of leaves can also be beneficial to your lawn. When mowing leaves make sure they are dry and are not laying too thick on the lawn. Do not wait for all the leaves to be off the trees before you mow.

⚠ **WARNING!** If you strike a foreign object, stop the engine. Remove wire from spark plug, thoroughly inspect the mower for any damage and repair the damage before restarting and operating the mower. Extensive vibration of the mower during operation is an indication of damage. The unit should be promptly inspected and repaired.

8.5 GRASS CATCHER

There is a level indicator on the top of the grass catcher that shows whether the catcher is empty or full.

- The level indicator inflates if the catcher is not full during the move. (Fig. 14B)
- If the catcher is full, the indicator collapses; once this happens, stop moving immediately and empty the catcher, make sure it is clean and ensure its meshwork is ventilated. (Fig. 14A)

⚠ **IMPORTANT!** If the position of indicator opening is very dirty, the indicator will not inflate-in this case, clean the position of indicator opening immediately.

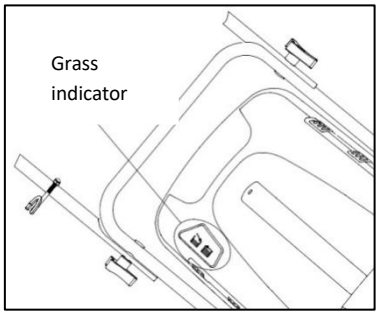

FIG 14A

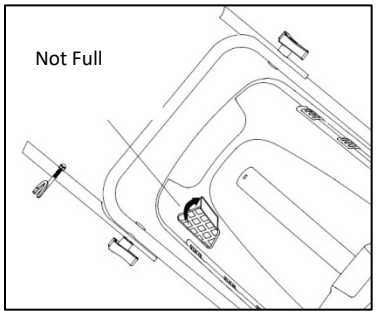

FIG 14B

8.6 DECK

The underside of the mower deck should be cleaned after each use to prevent a buildup of grass clippings, leaves, dirt or other matter. If this debris is allowed to accumulate, it will invite rust and corrosion and may prevent proper mulching. The deck may be cleaned by tilting the mower and scraping clean with a suitable tool (make certain the spark plug wire is disconnected).

8.6 HEIGHT ADJUSTMENT INSTRUCTIONS

⚠ **CAUTION!** Do not at any time make any adjustment to lawnmower without first stopping the engine and disconnecting the spark plug wire.

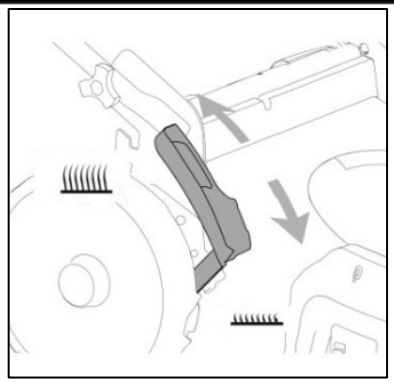

FIG 15

⚠ **CAUTION!** Before changing mowing height, stop mower and disconnect spark plug cable.

Your mower is equipped with a central height adjustment lever offering 7 height positions.

The height (the blade to the ground) can be adjusted from 25mm to 75mm (7 height positions). (Fig.15)

The lowest adjustment：25mm (position 1), the highest adjustment：75mm (position 7).

- Stop mower before changing mower to cut height.

To change the height of cut, squeeze adjuster lever toward the wheel, moving up or down to selected height

9. LAWN MOWER MAINTENANCE

1. Engine		Before each use	First month or 5hrs	Every 3 months or 25hrs	Every 6 months or 50hrs	Every year or 100hrs
Gasoline Engine oil	Check level	*				
	Change		*		*	
Air Cleaner	Check	*				
	Clean			*		
	Replace					*
Spark Plug	Check Clean				*	
	Replace					*
Valve Clearance	Check the adjustment			*		*
Fuel Line	Check	Every 2 Years				
2. Machine						
Check the blade fastening bolt and blade sharpness				*		
Replace the blade					*	
Check the belt				*		
Replace the belt					*	
Speed change cable is adjustment				*		
Tensioner Inspection					*	
Tensioner Replacement		Every 2 Years or 100hrs				

- If the machine is operating continuously, replace the belt every 30 hours.
- If the working environment is dusty, please clean the air filter once a day.

⚠WARNING! Start the engine carefully according to instructions and with feet well away from the blade.

⚠WARNING! Do not tilt the lawn mower when starting the engine. Start the mower on a level surface, free of high grass or obstacles.

⚠WARNING! Keep hands and feet away from the rotating parts. Do not start the engine when standing in front of the discharge opening.

9.6 If there is no automatic walking function after drive, maybe it's the belt is stuck by the belt pulley of the gearbox and there is not back in position.

⚠WARNING! Troubleshooting methods: With the engine running, running it back and forth from high speed to low speed several times
(operate part 15 in fig.1).

10. LUCRICATION INSTRUCTIONS

⚠**CAUTION!** DISCONNECT SPARK PLUG BEFORE SERVICING.

- WHEELS-Lubricate the ball bearings in each wheel at least once a season with light oil.
- ENGINE-Follow engine manual for lubrication instructions.

11. CLEANING

11.1 Wipe deck with dry cloth.

11.2 Insert the hose and turn on the water tap to clean the lower part of the deck. The position of the water pipe joint is shown in Fig.1 No.19.

⚠ CAUTION! Be sure to disconnect and ground the spark plug wire before working on the cutting blade to prevent accidental engine starting. Protect hands by using heavy gloves or a rag to grasp the cutting blades. Tip mower as specified in separate engine manual. Remove the hex bolt and washer which hold the blade and blade adapter to the engine crankshaft. Remove the blade and adapter from the crankshaft.

⚠WARNING! Periodically inspect the blade adapter for cracks, especially if you strike a foreign object. Replace it when necessary.

For best results your blade should be sharp. The blade may be re-sharpened by removing it and either grinding or filing the cutting edge keeping as close to the original bevel as possible. It is extremely important that each cutting edge receives an equal amount of grinding to prevent an unbalanced blade. Improper blade balance will result in excessive vibration causing eventual damage to the engine and mower. Be sure to carefully balance blade after sharpening. The blade can be tested for balance by balancing it on a round shaft screwdriver. Remove metal from the heavy side until it balances evenly.

Before reassembling the blade and the blade adapter to the unit, lubricate the engine crankshaft and the inner surface of the blade adapter with light oil. Install the blade adapter on the crankshaft. Refer to figure 19A/19B/19C. Place the blade with the part number facing away from the adapter. Align the washer over the blade and insert the hex bolt. Tighten the hex bolt to the torque listed below:

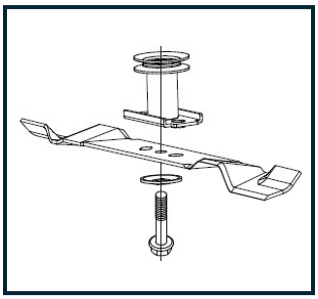

Fig19A (Self-propelled)

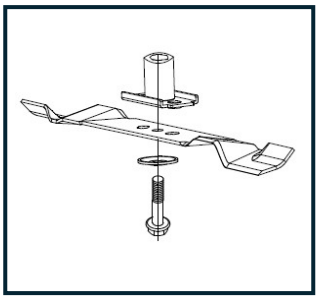

Fig 19B (Push)

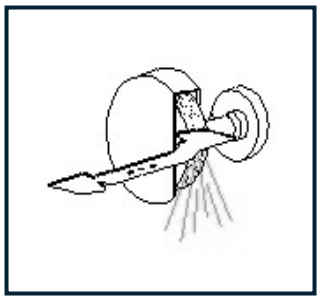

FIG 19C

11.3 BLADE MOUNTING TORQUE

Center Bolt **40-45 N.m.,** to ensure safe operation of your unit. ALL nuts and bolts must be checked periodically for correct tightness.

After prolonged use, especially in sandy soil conditions, the blade will become worn and lose some of the original shape. Cutting efficiency will be reduced and the blade should be replaced. Replace with an approved factory replacement blade only.

Possible damage resulting from blade unbalance conditions is not the responsibility of the manufacturer.
When you change the blade, you must use the original blade type which is shown in technical data sheet. (For order the blade, pls. contact your local dealer.)

11.4 ENGINE

Refer to the separate engine manual for engine maintenance instructions.
Maintain engine oil as instructed in the separate engine manual packed with your unit. Read and follow instructions carefully.
Service air cleaner as per separate engine manual under normal conditions.
Clean every few hours under extremely dusty conditions. Poor engine performance and flooding usually indicates that the air cleaner should be serviced.
To service the air cleaner, refer to the separate engine manual packed with your unit.
The spark plug should be cleaned and the gap reset once a season. Spark plug replacement is recommended at the start of each mowing season, check engine manual for correct plug type and gap specifications.
Clean the engine regularly with a cloth or brush. Keep the cooling system (blower housing area) clean to permit proper air circulation which is essential to engine performance and life. Be certain to remove all grass, dirt and combustible debris from muffler area.

12. STORAGE INSTRUCTIONS (OFF SEASON)

The following steps should be taken to prepare lawn mower for storage.

- Empty the tank after the last mowing of the season.
- Empty the petrol tank with a suction pump.

⚠CAUTION! Do not drain the petrol in closed rooms, in proximity of open fire, etc. Do not smoke! Petrol fumes can cause explosions or fire.

- Start the engine and let it run until it has used up all remaining petrol and stalls, this operation is very important, otherwise, placing the mower for long time will make it very difficult to restart.
- Remove the spark plug. Use an oilcan to fill approx. 20 ml oil into the combustion chamber. Operate the starter to evenly distribute the oil in the combustion chamber. Replace the spark plug.
- Clean and grease the lawnmower carefully as described above under “Lubrication”.
- Slightly grease the cutter to avoid corrosion.
- Store the lawnmower in a dry, clean and frost-protected place, out of reach of unauthorized people.

⚠CAUTION! The engine must have completely cooled down before storing the lawnmower.

NOTE! When storing any type of power equipment in an unventilated or material storage shed.

- Care should be taken to rust-proof the equipment. Using light oil or silicone, coat the equipment, especially cables and all moving parts.
- Be careful not to bend or kink cables.
- If the starter rope becomes disconnected from rope guide on handle, disconnect and ground the spark plug wire, Depress the blade control handle and pull the starter rope out from engine slowly. Slip the starter rope into the rope guide bolt on handle.

Transport

Turn the engine off and allow the engine to cool down. Then disconnect the spark plug wire and empty the fuel tank according to the instructions in the engine manual.
Ensure you not to bend or damage the cutter when pushing the lawnmower over obstacles.
Secure the lawnmower during transport to prevent loss of fuel, damage or injury.

13. TROUBLESHOOTING

PROBLEM	PROBABLE CAUSE	CORRECTIVE ACTION
Gasoline engine does not start.	Fuel tank is empty.	Fill tank with fuel: refer to ENGINE OWNERS MANUAL.
	Air cleaner element is dirty.	Clean air cleaner element: refer to ENGINE OWNERS MANUAL.
	Spark plug loose.	Tighten spark plug to 20-25 Nm.
	Spark plug wire loose or disconnected from plug.	Install spark plug wire on spark plug.
	Spark plug gap is incorrect.	Set gap between electrodes at 0.7 to 0.8mm.
	Spark plug is defective	Install new, correctly gapped plug: refer to ENGINE OWNERS MANUAL.
	The carburetor air pump is not pumping	The air pump is pressed 1-3 times.
	Faulty ignition module.	Contact the service agent.
Engine difficult to start or loses power.	Dirt, water, or stale fuel tank.	Drain fuel and clean tank. Fill tank with clean, fresh fuel.
	Vent hole in fuel tank cap is plugged.	Clean or replace fuel tank cap.
	Air cleaner element is dirty.	Clean air cleaner element.
Engine operates erratically.	Spark plug is defective.	Install new, correctly gapped plug: refer to ENGINE OWNERS MANUAL.
	Spark plug gap is incorrect.	Set gap between electrodes at 0.7 to 0.8mm.
	Air cleaner element is dirty.	Clean air cleaner element: refer to ENGINE OWNERS MANUAL.
Engine idles poorly.	Air cleaner element is dirty.	Clean air cleaner element: refer to ENGINE OWNERS MANUAL.
	Air slots in engine shroud are blocked.	Remove debris from slots.
	Cooling fins and air passages under engine blower housing are blocked.	Remove debris from cooling fins and air passages.
Engine skips at high speed.	Gap between electrodes of spark plug is too close.	Set gap between electrodes at 0.7 to 0.8mm
Engine overheats	Cooling air flow is restricted.	Remover any debris from slots in shroud, blower housing, air passages.
	Incorrect spark plug.	Install the original spark plug and cooling fins on engine.
Mower vibrates abnormally	Cutting assembly is loose.	Tighten blade.
	Cutting assembly is unbalanced	Balance blade.

14. EXPLODED VIEW AND PARTS LIST

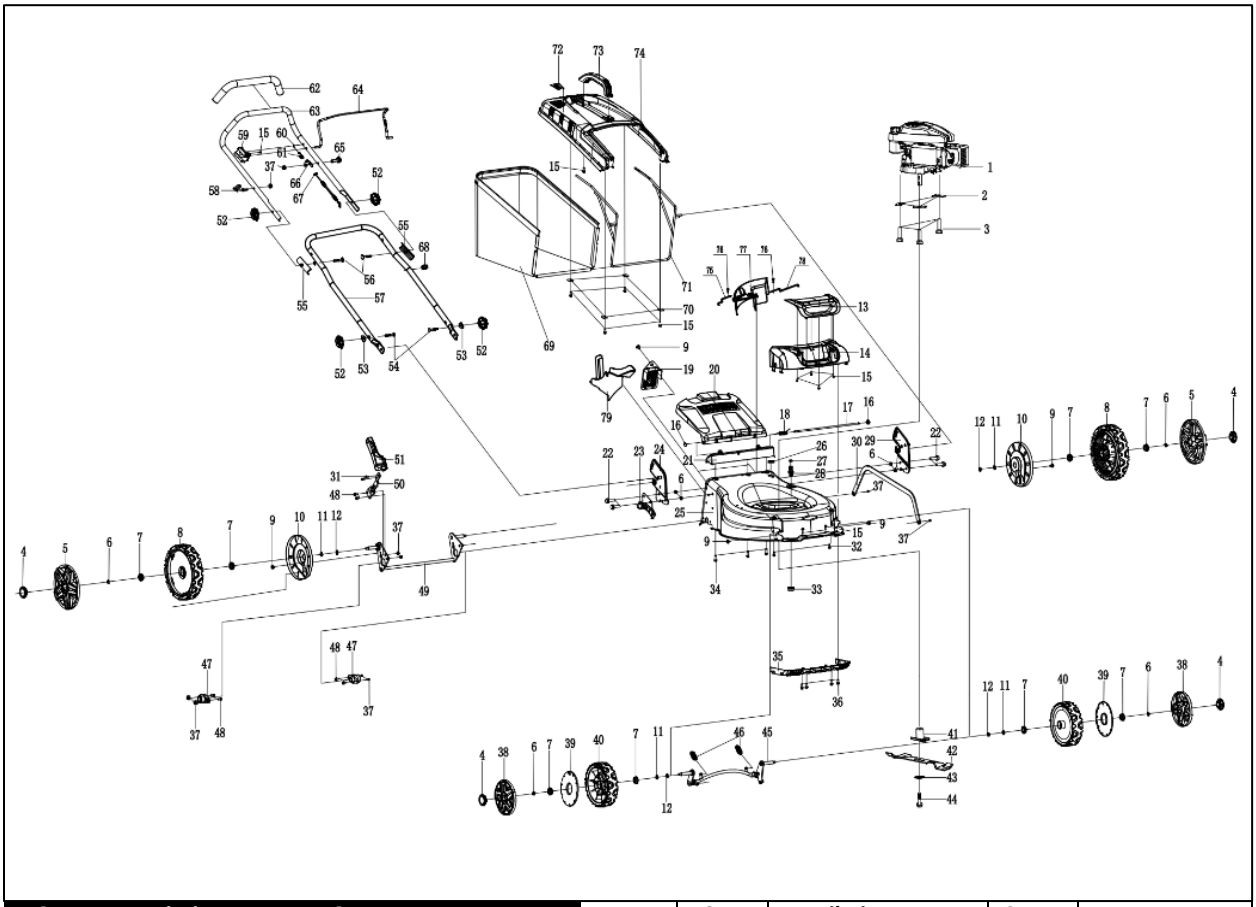

NO.	Description	Qty	Part #
1	Engine	1	20096259
2	fixing plate	3	20074876
3	Combination bolt M8×30	3	20075009
4	Small wheel cover	4	20075242
5	Rear Wheel cover (10")	2	20074964
6	Nut M8	8	20061348
7	Bearing	8	20062133
8	Rear wheel	2	20075233
9	Nut L221A	5	20062115
10	Dust wheel cover 10"	2	20075244
11	Wave washers ¢14×0.4	4	20061499
12	Washer ¢12.7×0.8	4	20074879
13	front cover	1	20087229
14	Head mask of deck	1	20077392
15	Screw ST5×25	5	20060939
16	Plug	2	20075180
17	Axis	1	20074875
18	Torsion spring	1	20074867
19	Ventilation window	1	20075192
20	Rear deflector	1	20074958
21	Dust strip	1	20077408
22	blot	4	20061274
23	Gear plate	1	20075157
24	Right bracket	1	20075161
25	Deck	1	20077423
26	Jacket	1	20075191
27	O-ring	1	20055756
28	Pipe connector	1	20074862
29	Left bracket	1	20075160
30	Cutting height rod	1	20077416
31	Screw M5*10	2	20054540
32	Screw ST4.8×8	2	20051788
33	Nut M14×1.5 PA6	1	20075189
34	Self-tapping screws 5/16”-14 l= 16mm	3	20074967
35	Lower lid	1	20077402
36	Screw ST5×25	5	20060939
37	Nut M6	11	20061385
38	Front wheel disc 8”	2	20075250

39	Middle wheel cover	2	20077359
40	Front wheel 8”	2	20075238
41	Blade adapter	1	20086096
42	Blade	1	20087159
43	washer	1	20070623
44	blade fixing bolt	1	20091553
45	Front axle	1	20077399
46	Spring	2	20074868
47	Ball bearing support	2	20074961
48	Screw M6×16	6	20061200
49	Rear axle	1	20077409
50	Cutting height lever	1	20075222
51	Handle	1	20075251
52	Screw with plastic nut	4	20060728
53	Flat washer	2	20062130
54	Screw M8×50	4	20074863
55	Insulation sleeve	2	20075288
56	Screw M8×60	2	20075257
57	U-Inferior handle	1	20077405
58	Rope guide support	1	20074873
59	Limited plate	1	20075197
60	Connection line	1	20075113
61	Insulator	1	20075194
62	Damping sleeve	1	20076424
63	Upper handle	1	20075193
64	brake control handle	1	20075292
65	Screw M6×35	1	20061199
66	Bracket for cable	1	20075645
67	Limited plate	1	20087920
68	Card line block	1	20075011
69	Grass catcher bag	1	20096258
70	washer	4	20075246
71	Frame	1	20077327
72	Indicator cover	1	20075236
73	Handle of catcher bag	1	20074960
74	Cover of catcher bag	1	20075235
75	right half shaft	1	20097978
76	Rear grass deflector	1	20097894
77	left half shaft	1	20097979
78	Grass blocking cover	1	20086509
79	Engine	2	20096259

PRORUN regularly improves our products, and you may find slight differences between your machine and the descriptions contained within this operator's manual. Modifications can be made to the machine without notice and without the obligation to update the manual, providing that the essential safety and functional characteristics remain unaltered. Contact PRORUN Customer Service with any questions and for current specifications.

PRORUN / TOPSUN USA
10130 Perimeter Parkway
Suite 140
Charlotte, NC 28216
Customer Service: (844) 905-0882 Email: info@proruntech.com Website: www.proruntools.com

Zhejiang Zhongjian Technology Co., Ltd Web: www.topsunpower.cc
E-mail: sales@topsunpower.cc
ADD: No.155 Mingyuan North AVE, Economic Development Zone, Yongkang, Zhejiang, 321300, P.R. CHINA
Made in China