OWNER'S MANUAL

Versa Food Bars® and Versa Work Tables
Cambro Versa Food Service System

This manual applies to the following Versa Food Bar and Versa Work Table models:

Versa Food Bar: VBR5, VBRL5, VBRHD5, VBRLHD5, VBRU5, VBRUHD5, VBR6, VBRL6, VBRHD6, VBRLHD6, VBRU6, VBRUHD6

Versa Work Table: VBRT5, VBRTL5, VBRTHD5, VBRTLHD5, VBRUT5, VBRUTHD5, VBRT6, VBRTL6, VBRTHD6, VBRTLHD6, VBRUT6, VBRUTHD6

VBRHD6

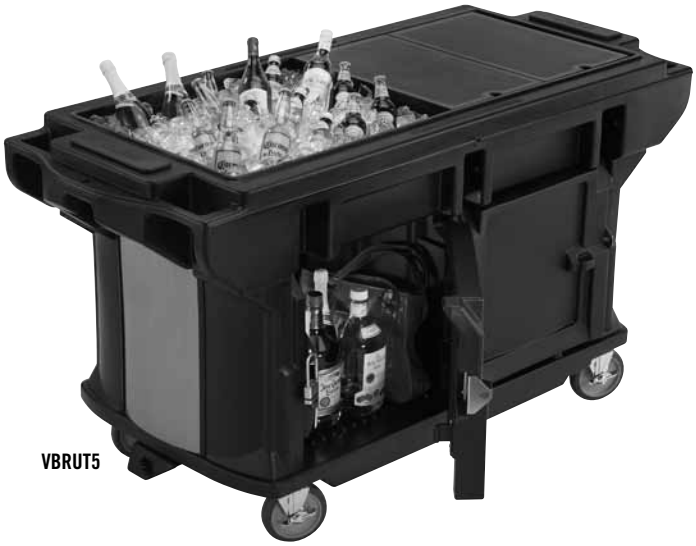

VBRUT5

Table of Contents

Introduction 1
Section I Assembly 2
Section II Mobility 3
Section III Safety Information 3
Section IV Cleaning and Maintenance 3
Section V Warranty 4
Section VI Replacement Parts 4

Introduction

Congratulations on the purchase of your new Cambro Versa Food Bar and/or Versa Work Table. This Owner's Manual provides you with a step-by-step guide to assembling, operating and maintaining your Versa Food Service System.

If you have further questions, please contact your Cambro Sales Representative, visit our Web site at www.cambro.com or call our Customer Service Department at USA 800 833 3003, 714 848 1555, N. Ireland & UK 0800 587 0057, Ireland 1800 509 046.

CAMBRO®

www.cambro.com

Section I - Versa Food Bars® and Work Table Assembly Instructions

Tools Needed For Assembly: Crescent Wrench

Base Assembly Instructions apply to the following models:

VBR5	VBRL5	VBRHD5	VBRLHD5
VBR6	VBRL6	VBRHD5	VBRLHD6
VBRT5	VBRTL5	VBRTHD5	VBRTLHD5
VBRT6	VBRTL6	VBRTHD6	VBRTLHD6

Base Assembly Instructions

1. Place Food Bar body (part A) upside down as shown.
2. Make sure Teflon® tape is on faucet thread. Screw faucet (part C) into bottom of Food Bar body. Drain faucet has "O" ring pre-installed.
3. Unpack the two decorative leg panels.
4. Place one panel to fit into the panel holders on the legs. The panel should slide into the holders. The panel can also slightly bend to fit into the holders.
5. Before attaching legs to food bar body, ensure that the side with the decorative panel is facing outward. Attach legs (part B) to body using lag type bolts (part E) with washers (part F & G). Hand tighten bolts initially. Use crescent wrench for final tightening.
6. The Asset Management label will adhere best to a smooth surface on the Versa Food Bar/Work Table. If possible, avoid placing the label on a textured surface.

WARNING: Do not use power tools or impact to tighten. Over-tightening will cause stripped threads.

WARNING: Open well should not be used to hold ice for human consumption. When well covers are in place, work table is not acceptable for direct food contact.

NOTE: With well covers removed, the Versa Work Table well can be used for self serve bottled or canned beverages or packaged food products only.

NOTE: A sneeze guard is required by law for service of unpackaged or bulk foods.

Sneeze Guard Assembly Instructions apply to the following models:

VBR5	VBRL5	VBRU5	VBRHD5	VBRLHD5	VBRUHD5
VBR6	VBRL6	VBRU6	VBRHD6	VBRLHD6	VBRUHD6

Sneeze Guard Assembly Instructions

1. Place uprights (part C) in the recesses at both ends of the food bar body. The sneeze guard positioning pins in each upright should be facing inward to the food bar body well.
2. Place nylon thumbscrews through holes located on the bottom of each side of the food bar body and thread the thumbscrews into the base of each upright until tight.
3. Remove the blue protective cover from all sneeze guard panels.
4. Slide the ends of a clear sneeze guard panel between the two uprights so that each panel end rests on top of the positioning points or pins. Repeat with the second clear sneeze guard panel being careful not to spread the uprights so as to cause the first panel to drop out of position.
5. Place the top shelf so that it fits on top of both uprights. With the top shelf in place, install the black knob thumbscrew and finish washer into each upright to tighten the top shelf in place.

NOTE: If end sneeze guard panel does not sit at required height, place one 1¼" (3,18 cm) Black Rubber Flat Washer on the bottom pivot pin of each clear sneeze guard end panel.

6. Lift each end of each clear sneeze guard panel and position a sneeze guard end panel so that the tallest edge lines up with the side of the upright.
7. Firmly snap the end panel into the upright. Repeat with an end panel on the other upright. See photos A, B, and C below.
8. Position the end panels to allow the clear sneeze guard panel assembly to fit smoothly onto the sneeze guard end panels. Use the location cone as a guide to fit the parts together. See photo C below.

NOTE:

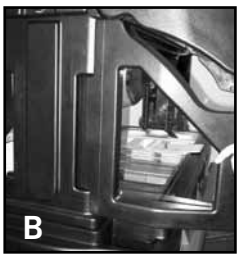

Base Parts List

A. 1 - Food Bar Body
B. 2 - Legs with Pre-installed Casters w/ Brakes
C. 1 - Faucet
D. 2 - Brushed Metal Finish Panels for the Legs
E. 20 - ⅜" x 2" (1 x 5,1 cm) Metal Lag Type Bolts - 10 per leg
F. 20 - ½" (1,27 cm) Diameter Flat Washers - 10 per leg
G. 20 - ½" (1,27 cm) Diameter Internal Star Lock Washers - 10 per leg
H. 4 or 5 Well Covers: 4 well covers for 5' (152 cm) Versa Work Table, 5 Well Covers for 6' (183 cm) Versa Work Table (optional accessory for Versa Food Bars)
I. 1 - Asset Management Label

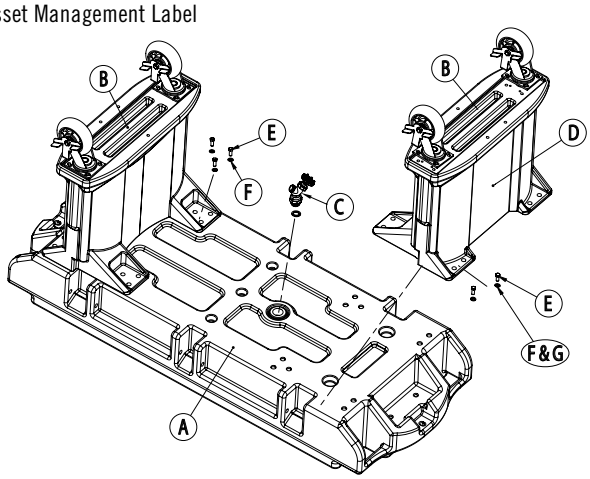

Versa Food Bar and Versa Work Table - Ultra Series

Cabinet base is factory assembled. No assembly required.

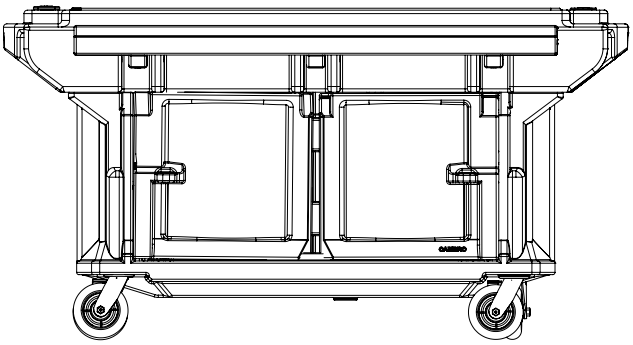

Sneeze Guard Parts List

A. 1 - Top Shelf
B. 2 - Clear Sneeze Guard Top Panels
C. 2 - Upright Assemblies
D. 4 - Sneeze Guard End Panels
E. 2 - Black Knob Thumb Screws and Finish Washers
F. 4 - White Nylon Thumbscrews
G. 4 - 1¼" (3,18 cm) Black Rubber Flat Washers

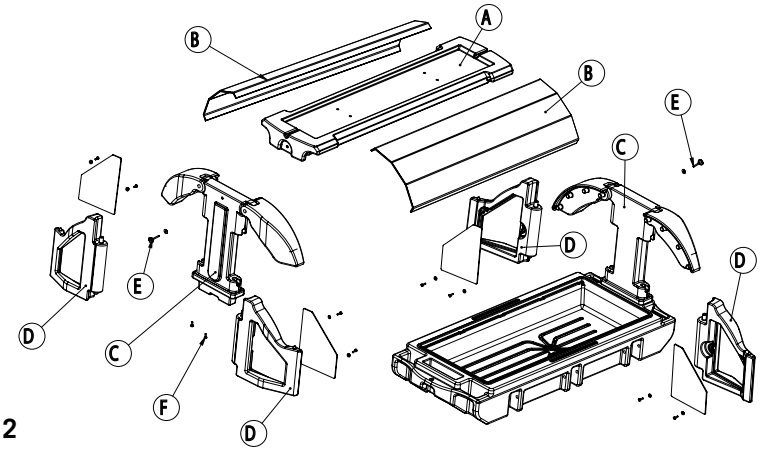

Section II - Mobility

Knock-Down and Transport

1. If the model has tray rails, lower the tray rails.
2. Lift the clear sneeze panel arm one at a time and swing the sneeze guard end panels inward (toward the food bar body well).
3. Lower the clear sneeze panel arm to the down position. Repeat for the other side.
4. Adjust the caster brakes to the OFF position.
5. The unit is ready for transport.

NOTE: Only use handles to maneuver unit.

Section III - Safety Information

To help protect your Cambro Versa Food Bar® / Versa Work Table and reduce risk of injuries:

1. Do not use any type of canned/portable cooking fuel inside a Versa Food Bar / Versa Work Table.
2. Do not place any item hotter than 190˚F (88˚C) inside or on the Versa Food Bar / Versa Work Table.
3. Do not place the Versa Food Bar / Versa Work Table against any direct heat source such as a hot oven or grill.
4. Do not use sneeze guards to maneuver unit.
5. The Versa Food Bar / Versa Work Table, Versa Tray Rails and End Table are not designed for leaning, sitting, climbing or standing.
6. Maximum weight limit on the merchandising shelf of the Versa Food Bar is 20 lbs. (9 Kg).
7. Do not stack items on the merchandising shelf of the Versa Food Bar.
8. Maximum weight limit in each storage compartment of the Versa Food Bar and Versa Work Table Ultra Series is 50 Lbs. (22,7 Kg).
9. Maximum weight limit on each tray rail is 50 lbs. (22,6 Kg).
10. Maximum weight limit on the end table is 50 lbs. (22,6 Kg).

Section IV – Cleaning and Maintenance

A. Cleaning Instructions

Clear Sneeze Guards:

Clean with a mild, non-abrasive detergent and warm water. Clean then wipe dry with soft cloth or soft paper towel.
WARNING: Do not use window cleaner, ammonia based cleaners, kitchen scouring compounds, cleaning solvents such as acetone, bleach, benzene, carbon tetrachloride or thinners. These chemicals will damage the sneeze guards.

Faucet:

Scrub with brush, hot soapy water and rinse thoroughly with clean water.
WARNING: Never use a metal brush or abrasive cleaners. These tools will damage the faucet.

Food Bar Body, Uprights and Top Shelf:

Using a mild detergent wash with warm soapy water and a plastic bristle brush and rinse thoroughly with clean water. Unit may also be carefully steam cleaned if desired.
WARNING: Never use a metal brush or abrasive cleaners or pads. These tools will damage the Versa Food Bar. If staining occurs, use any standard de-stainer.
NOTE: The food bar may be drained by connecting a hose to the faucet.

B. Caster Maintenance

Caster maintenance should be performed each time the Food Bar has been washed or steam cleaned.

1. Grease swivel raceway of caster using a lubricant such as Lubriplate #930-AA, Keystone #84EPXLT multi-purpose grease or equivalent. Apply grease using a grease gun with a needle nose adapter or a tube-type applicator such as Sta-lube Moly-graph Assembly Lube (Fig. A). These can be obtained at most auto parts stores.
2. Use a light oil such as WD-40 on the hub (Fig. B). Check caster for damage and test caster spin and swivel rotation before returning to service.
3. Check/tighten all thumbscrews and hex bolts on each leg assembly after each cleaning and caster maintenance.
4. Always replace casters if damaged or inoperable.

Section V – Warranty

CAMBRO WARRANTY AND PRODUCT LIABILITY

Cambro warrants to the original buyer that if a product proves defective:

1. Within 1 year from the date of manufacture, Cambro will replace the product free of charge; or,
2. After 1 year and up to 2 years from the date of manufacture, Cambro will grant a credit of 2/3 off replacement product; or,
3. After 2 years and up to 3 years from the date of manufacture, Cambro will grant a credit of 1/3 of the original price towards a replacement product.

ABUSE OR MISUSE WILL VOID THIS WARRANTY

In the event of a defective product, your Cambro Sales Representative will collect appropriate information, such as date of manufacture and invoice information for warranty process. With proof of purchase to the original owner, Cambro Manufacturing will replace the product to the original owner.

NOTE: Your Cambro Sales Representative will determine if the product should be returned for inspection before issuing credit.

Section VI – Replacement Parts

Please visit www.cambro.com for a complete list of replacement parts or contact your local Cambro Representative or Distributor.

CAMBRO®

Tel: 714 848 1555 **Toll Free:** 800 854 7631 **Fax:** 714 842 3430 **Customer Service** 800 833 3003
© Cambro Manufacturing Company, 5801 Skylab Road, Huntington Beach, CA 92647-2056
UMVBR0903 REV A 0612 Printed in USA

D04125_VB Food /Work Table_REV A 06/12 MN