User Manual

ELECTROLUX VANGUARD SERIES SPLIT AIR CONDITIONER

Models: SAC09SNV23-1 | SAC12SNV23-1 | SAC18SHV22-1 | SAC24SHV22-1

Electrolux

Customer Support
Email: electroluxacsupport@theinnospace.com
Phone: +1 (888) 2022194

Safety Notice (R32)

R32 is a flammable A2L refrigerant. The air conditioner is charged with R32.

- Before using the air conditioner, read this User Manual carefully.
- Before installing the air conditioner, read the Installation and Servicing instructions carefully.
- Before repairing the air conditioner, refer to the technical service manual and follow all R32 servicing requirements.

Compared with common refrigerants, R32 does not harm the ozone layer and uses a smaller charge amount to reach high efficiency. However, it is flammable and may form an explosive mixture with air under certain conditions. Always follow the R32 safety and installation instructions in this manual.

CONTENTS

Safety Precautions 02

Name Of Parts 06

Remote Control 08

Operation Instructions 15

Refrigerant Sensor (Optional) 16

R32 Servicing Requirements 17

Installation Precautions (R32) 24

Indoor Unit Installation 32

Outdoor Unit Installation 38

Test Operation 42

Maintenance 43

Troubleshooting 45

Disposal Guideline 47

* The design and specifications are subject to change without prior notice for product improvement. Consult with the sales agency or manufacturer for details.

* The shape and position of buttons and indicators may vary according to the model, but their function are the same.

SAFETY PRECAUTIONS

ELECTROLUX SPLIT AIR CONDITIONER

Models: SAC09SNV23-1 | SAC12SNV23-1 | SAC18SHV22-1 | SAC24SHV22-1

SAFETY RULES AND RECOMMENDATIONS FOR THE INSTALLER

1. Read this guide before installing and using the air conditioner.
2. During installation of the indoor and outdoor units, access to the working area should be forbidden to children. Unforeseeable accidents could happen.
3. Make sure that the base of the outdoor unit is firmly fixed.
4. Check that air cannot enter the refrigerant system and check for refrigerant leaks when moving the air conditioner.
5. Carry out a test cycle after installing the air conditioner and record the operating data.
6. Protect the indoor unit with a fuse of suitable capacity for the maximum input current or with another overload protection device.
7. Ensure that the mains voltage corresponds to that stamped on the rating plate. Keep the switch or power plug clean. Insert the power plug correctly and firmly into the socket, thereby avoiding the risk of electric shock or fire due to insufficient contact.
8. Check that the socket is suitable for the plug; otherwise, have the socket changed.
9. The air conditioner must be fitted with means for disconnection from the supply mains having contact separation in all poles that provide full disconnection under overvoltage category III conditions, and these means must be incorporated in the fixed wiring in accordance with the wiring rules.
10. The air conditioner must be installed by professional or qualified persons.
11. Do not install the air conditioner at a distance of less than 50 cm from flammable substances (alcohol, etc.) or from pressurized containers (e.g., spray cans).
12. If the air conditioner is used in areas without the possibility of ventilation, pre cautions must be taken to prevent any leaks of refrigerant gas from remaining in the environment and creating a danger of fire.
13. The packaging materials are recyclable and should be disposed of in separate waste bins. Take the air conditioner at the end of its useful life to a special waste collection center for disposal.
14. Only use the air conditioner as instructed in this booklet. These instructions are not intended to cover every possible condition and situation. As with any electrical household appliance, common sense and caution are therefore always recommended for installation, operation, and maintenance.
15. The air conditioner must be installed in accordance with applicable national regulations.
16. Before accessing the terminals, all the power circuits must be disconnected from the power supply.

SAFETY PRECAUTIONS

SAFETY RULES AND RECOMMENDATIONS FOR THE INSTALLER

17. The air conditioner shall be installed in accordance with national wiring regulations.
18. This air conditioner can be used by children aged from 8 years and above and persons with reduced physical, sensory, or mental capabilities or lack of experience and knowledge if they have been given supervision or instruction concerning use of the air conditioner in a safe way and understand the hazards involved. Children shall not play with the air conditioner. Cleaning and user maintenance shall not be made by children without supervision.
19. Do not try to install the air conditioner alone; always contact specialized technical personnel.
20. Cleaning and maintenance must be carried out by specialized technical personnel. In any case, disconnect the air conditioner from the mains electricity supply before carrying out any cleaning or maintenance.
21. Ensure that the mains voltage corresponds to that stamped on the rating plate. Keep the switch or power plug clean. Insert the power plug correctly and firmly into the socket, thereby avoiding the risk of electric shock or fire due to insufficient contact.
22. Do not pull out the plug to switch off the air conditioner when it is in operation, since this could create a spark and cause a fire, etc.
23. This air conditioner has been made for air conditioning domestic environments and must not be used for any other purpose, such as for drying clothes, cooling food, etc.
24. Always use the air conditioner with the air filter mounted. The use of the air conditioner without air filter could cause an excessive accumulation of dust or waste on the inner parts of the device with possible subsequent failures.
25. The user is responsible for having the air conditioner installed by a qualified technician, who must check that earthing/grounding is done in accordance with current legislation and insert a thermomagnetic circuit breaker.
26. The batteries in the remote controller must be recycled or disposed of properly. For disposal of scrap batteries, please discard the batteries as sorted municipal waste at the accessible collection point.
27. Never remain directly exposed to the flow of cold air for a long time. The direct and prolonged exposure to cold air could be dangerous for your health. Particular care should be taken in the rooms where there are children, old, or sick people.
28. If the air conditioner gives off smoke or there is a smell of burning, immediately cut off the power supply and contact the Service Center.
29. The prolonged use of the device in such conditions could cause fire or electrocution.
30. Have repairs carried out only by an authorized Service Center of the manufacturer. Incorrect repair could expose the user to the risk of electric shock, etc.

SAFETY PRECAUTIONS

SAFETY RULES AND RECOMMENDATIONS FOR THE INSTALLER

31. Unhook the automatic switch if you foresee not using the device for a long time. The airflow direction must be properly adjusted.
32. The flaps must be directed downwards in the heating mode and upwards in the cooling mode.
33. Ensure that the air conditioner is disconnected from the power supply when it will remain inoperative for a long period and before carrying out any cleaning or maintenance.
34. Selecting the most suitable temperature can prevent damage to the air conditioner.

SAFETY PRECAUTIONS

SAFETY RULES AND PROHIBITIONS

1. Do not bend, pull, or compress the power cord as this may cause damage leading to fire or electric shock. Only authorized personnel should replace damaged power cords.
2. Avoid the use of extension cords or multi-outlet power boards.
3. Do not operate the appliance with wet hands or barefoot.
4. Ensure air inlets and outlets are unobstructed to prevent damage or reduced performance.
5. Do not modify or alter the appliance configuration.
6. Avoid installation in environments with gases, oils, sulfur compounds, or near heat sources.
7. The appliance is not intended for use by unsupervised children or persons with reduced physical or mental capabilities.
8. Do not place heavy or hot objects on the appliance, particularly the outdoor unit.
9. Keep doors and windows closed during operation to ensure efficient performance.
10. Do not direct airflow towards plants or animals.
11. Prolonged direct airflow exposure may harm plants, animals, and occupants.
12. Avoid contact with water to prevent electric shock.
13. Do not climb onto or place objects on outdoor units.
14. Never insert fingers, sticks, or other objects into air inlets or outlets.
15. Supervise children to ensure safety and prevent play involving the appliance. Replace damaged cords only with qualified service.

FLAMMABLE REFRIGERANT WARNING

- This air conditioner uses R32 refrigerant, which is mildly flammable (A2L).
- Install, operate, and store the unit only in rooms that meet the minimum floor area and ventilation requirements specified in this manual.
- Keep the unit away from open flames, welding, smoking, hot surfaces, and other ignition sources.
- If you suspect a refrigerant leak, close the outdoor unit service valves if it is safe to do so, ventilate the area, and leave the room for at least 15 minutes before going back in.
- Do not use open flames or tools that may spark to check for leaks. Use only approved electronic leak detectors or suitable leak detection fluids.
- Only qualified personnel with valid refrigerant handling certification may install, service, charge, or recover R32 refrigerant, and must follow national gas regulations and the manufacturer's instructions.
- Do not pierce, weld, or burn any part of the refrigerant circuit. Do not weld or braze damaged units on site; return damaged units to an authorized ser vice facility.

NAME OF PARTS

Indoor Unit

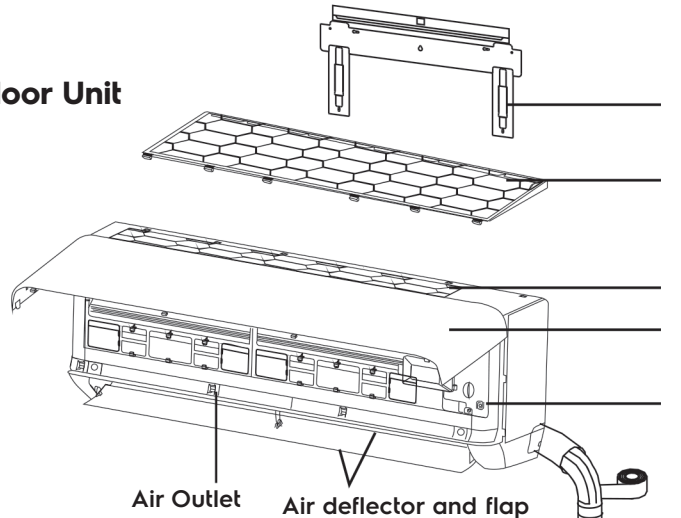

Outdoor Unit

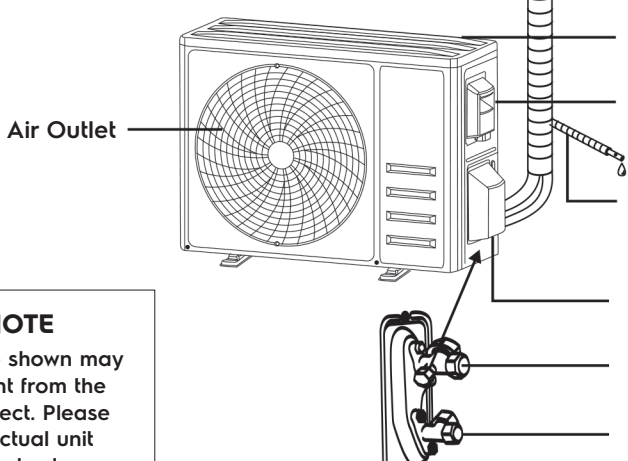

With protective cover removed

NOTE

This figure shown may be different from the actual object. Please take the actual unit as the standard.

NAME OF PARTS

Indoor Display

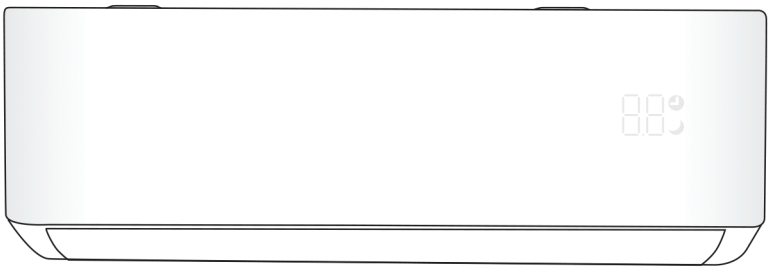

No.	LED	Function
1	88	Indicator for Timer, temperature, and Error codes
2		Lights up during Timer operation
3		SLEEP mode

Note: The shape and position of switches and indicators may vary according to the model, but their functions are the same.

REMOTE CONTROL

No.	Symbols	Meaning
1		Low battery warning
2		Auto Mode
3		Cooling Mode
4		Dry Mode
5		Fan only Mode
6		Heating Mode
7	ECO	ECO Mode
8		Timer
9	8.8 °E	Set temperature
10		AUTO, LOW, LOW-MID, MID, MID-HIGH, HIGH
11		Mute function
12		TURBO function
13		Horizontal swing
14		Vertical swing
15		SLEEP function
16		I FEEL function
17	8H	8°C heating function
18		IR transmission
19		Child lock active
20		Display control
21		Self-Clean function

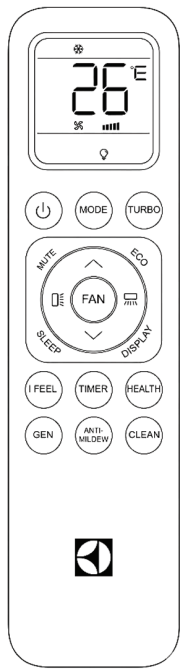

Note: The display and some functions of the remote control may vary according to the model.

REMOTE CONTROL

No.	Button	Function
1	⏻	Turn air conditioner on/off
2	^	Increase temperature or Timer hours
3	ˇ	Decrease temperature or Timer hours
4	MODE	Select mode: AUTO, COOL, DRY, FAN, HEAT
5	ECO	Activate/deactivate ECO function.
		Long press activates 8°C heating (select models)
6	TURBO	Activate/deactivate TURBO function
7	FAN	Select fan speed: AUTO, MUTE, LOW, LOW-MID, MID, MID-HIGH, HIGH, TURBO
8	TIMER	Set timer on/off
9	SLEEP	Activate/deactivate SLEEP function
10	DISPLAY	Switch indoor LED display on/off
11		Horizontal flaps swing up/down or set direction
12		Vertical deflectors swing left/right or set direction
13	I FEEL	Activate/deactivate I FEEL function
14	MUTE	Activate/deactivate MUTE function.
		Long press activates GEN function (select models)
15	MODE + TIMER	Activate/deactivate CHILD-LOCK function
16	CLEAN	Activate/deactivate SELF-CLEAN function (select models)
17	MEMORY	Save/recall favorite settings
18	ACC	Accessory button (model specific)

⚠ **Note:** The unit confirms correct reception of each button with a beep. Button shapes may vary by model.

Battery Replacement

Remove the battery cover plate from the rear of the remote control by sliding it in the direction of the arrow.

Install the batteries according to the direction and polarity shown on the remote control.

Reinstall the battery cover by sliding it into place.

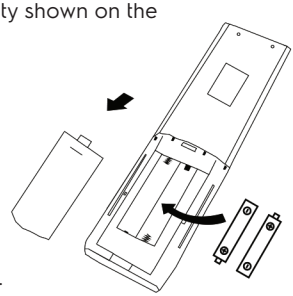

⚠ Use 2 pieces **LR03 AAA** (1.5V) batteries.
Do not use rechargeable batteries.

Replace old batteries with new ones of the same type when the display is no longer legible.

Do not dispose of batteries as unsorted municipal waste. Collect such waste separately for special treatment.

⚠ **For some models:** When inserting batteries for the first time, you can set Cooling only or Heat pump control type:

Insert batteries and turn off remote controller.

1. Long press **MODE** button until snowflake icon ❄ flashes to set Cooling only type.
2. Long press **MODE** button until sun icon ☼ flashes to set Heat pump type.
3. To reset, remove and reinstall batteries.

⚠ **Temperature display (°C/°F):** For some remote controllers:

1. Press and hold **TURBO** button for 5 seconds to enter change mode type.
2. Press and hold **TURBO** until it switches between °C and °F
3. Release and wait 5 seconds for selection to save.

Remote Control Notes:

1. Direct the remote control toward the air conditioner.
2. Ensure no objects block the path between remote and indoor unit signal receptor.
3. Never leave remote control exposed to direct sunlight..
4. Keep remote control at least 1 meter from televisions or other electrical appliances.

REMOTE CONTROL

COOLING MODE

COOL ❄ The cooling function allows the air conditioner to cool the room and reduce air humidity simultaneously.

To activate: Press **MODE** button until COOL ❄ symbol appears on display.

Set temperature lower than room temperature using ▲/▼ buttons.

FAN MODE (Not FAN button)

FAN Fan mode provides air ventilation only.

To Set: Press **MODE** button until FAN symbol appears on display.

DRY MODE

DRY This function reduces humidity to make room more comfortable.

To Set: Press **MODE** until DRY appears. Automatic dehumidification starts.

AUTO MODE

AUTO **To Set:** Press **MODE** until AUTO appears.

Unit automatically selects operating mode according to room temperature.

HEATING MODE

HEAT ☼ The heating function allows the air conditioner to heat the room.

To activate: Press **MODE** button until **HEAT** ☼ symbol appears on display.

Set temperature lower than room temperature using ▲/▼ buttons.

⚠ **Heating Operation Characteristics (Heat Pump Models)**

Preheating: Indoor unit takes 2-5 minutes to preheat, then blows warm air.

Defrosting: When outdoor unit is frosted, automatic defrost activates (2-10 minutes). Indoor fan stops during defrost. Resumes **HEAT** ☼ mode automatically after defrost.

North American Market: Press **ECO** button 10 times within 8 seconds (in **HEAT** mode) for forced defrosting - clears outdoor ice faster.

FAN SPEED function (FAN button)

FAN Press **FAN** button to cycle through:

AUTO → MUTE → LOW → LOW-MID → MID → MID-HIGH → HIGH → TURBO

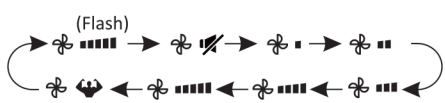

Child-Lock function

1. Long press **MODE** and **TIMER** buttons together to activate.

2. Repeat to deactivate.

Under Child-Lock, no single button functions.

REMOTE CONTROL

TIMER function ---- TIMER ON

TIMER

Automatically switch on appliance
When unit is switched off:

1. Press **TIMER** button first time. "**6.0**" appears on remote display and flashes.

2. Press ▲ or ▼ buttons to set desired Timer-on time. Time increases/decreases by half hour between 0-10 hours and by one hour between 10-24 hours.

3. Press **TIMER** button second time to confirm.

4. Set required mode (COOL, HEAT, AUTO, FAN, DRY) using **MODE** button.

5. Set fan speed using **FAN** button.

6. Set operation temperature using ▲/▼ buttons.

7. Cancel by pressing **TIMER** button

TIMER function ---- TIMER OFF

TIMER

Automatically switch off appliance
When unit is switched on:

1. Confirm appliance is **ON**.

2. Press **TIMER** button first time to set switch-off.

3. Press ▲/▼ buttons to set desired timer time.

4. Press **TIMER** button second time to confirm.

5. Cancel by pressing **TIMER** button.

Note: All programming must be completed within 5 seconds, otherwise the setting will be cancelled.

SWING function

SWING SWING

1. Press **SWING** button to activate louvers:

   1.1 Press **SWING** to activate horizontal flaps swinging up/down. Icon appears on remote display. Press again to stop at current angle.

   1.2 Press **SWING** to activate vertical deflectors swinging left/right. Icon appears on remote display. Press again to stop at current angle.

2. Vertical deflectors positioned manually under flaps allow airflow direction left or right.

3. For some inverter heating models, press both horizontal and vertical **SWING** buttons simultaneously to activate Self-Clean function (unit must be OFF).

⚠ **WARNING**

- Never position flaps manually; the delicate mechanism might be seriously damaged!
- Never put fingers, sticks, or other objects into air inlet or outlet vents. Contact with live parts may cause injury.

TURBO function

TURBO

Press **TURBO** button to activate. Turbo icon appears on display. Press again to cancel.

In **COOL** or **HEAT** mode, TURBO activates maximum cooling/heating with highest fan speed for strong airflow.

REMOTE CONTROL

MUTE function

MUTE

1. Press **MUTE** button to activate (icon appears).

2. Indoor unit operates at lowest fan speed for quiet operation (remote shows AUTO fan).

3. Pressing **FAN** or **TURBO** cancels **MUTE**.

Note: Cannot activate in **DRY** mode.

ECO function

ECO

ECO mode automatically adjusts operation for energy savings.

Press **ECO** button (ECO icon appears). Press again to cancel.

Available in COOLING and HEATING modes.

SLEEP function

SLEEP

Pre-set automatic operating program for sleeping.

Press **SLEEP** button (icon appears). Press again to cancel.

After 10 hours in sleep mode, returns to previously set mode.

I FEEL function

I FEEL

Press **I FEEL** to activate (icon appears).

Remote control measures temperature at its location and signals air conditioner for optimized comfort.

Auto deactivates after 8 hours (2 hours for some modes).

DISPLAY function (Indoor display)

DISPLAY

Press **DISPLAY** to switch indoor LED display **ON/OFF.**

REMOTE CONTROL

SELF-CLEAN function

Optional for some heat pump inverter models

1. Turn indoor unit **OFF** first.

2. Press **CLEAN** button. You will hear a beep, "**AC**" appears on indoor LED and ✓ remote display.

3. Function cleans evaporator by carrying away accumulated dirt and bacteria.

4. Runs approximately 30 minutes, then returns to previous mode.

5. Cancel during process by pressing ON/OFF button. Two beeps confirm completion or cancellation.

6. Normal noise may occur as plastic materials expand/contract with temperature changes.

Recommended ambient conditions:

- Indoor unit: ≤86°F (30°C)
- Outdoor unit: ≥41°F (5°C)

Note: Use every 3 months.

8°C heating function

1. Long press **ECO** button over 3 seconds to activate. "**8°C** (**46°F**)" appears on remote display.

2. Repeat to deactivate.

3. Automatically starts heating when room temperature drops below **8°C** (**46°F**).

4. Returns to standby when temperature reaches **9°C** (**48°F**).

5. Automatically cancels if room temperature exceeds **18°C** (**64°F**).

MEMORY function (Favorite Settings)

Save Favorite Setting:

1. In desired mode (COOLING, HEATING, FAN, DRY), long press **MEMORY** button over 3 seconds.

2. "AU" flashes on remote display, confirming favorite setting saved.

3. Press any button to exit. Reset by repeating steps 1-2.

Recall Favorite Setting:

1. In any mode (COOLING, HEATING, FAN, DRY), press **MEMORY** button once.

2. Unit runs with saved favorite settings. "AU" flashes.

3. Press **MEMORY** again or other buttons to cancel.

OPERATION INSTRUCTIONS

Operating Temperature Limits

Attempt to use the air conditioner outside the specified temperature range may cause the protection device to activate, preventing operation.
Use within following conditions:

MODE	Room Temperature	Outdoor Temperature
Heating	32°F-80°F (0°C-27°C)	-13°F-86°F (-25°C-30°C)
Cooling	63°F-90°F (17°C-32°C)	T1: 5°F-122°F (-15°C-50°C) T3: 5°F-131°F (-15°C-55°C)
Dry	63°F-90°F (17°C-32°C)	-

Low temperature heating: -13°F-86°F (-25°C-30°C)
Note: With power connected, compressor delays 3 minutes after restart or mode change.

HEATING OPERATION CHARACTERISTICS (Heat Pump Models)

Preheating: When heating function starts, indoor unit takes 2-5 minutes to preheat before blowing warm air.

Defrosting: During heating, when outdoor unit becomes frosted, automatic defrost activates to improve heating effect:

- Duration: 2-10 minutes
- Indoor and outdoor fans stop during defrost
- Resumes **HEATING** mode automatically after defrost completes

North American Market: For forced defrosting, press **ECO** button 10 times within 8 seconds (in HEATING mode).

EMERGENCY BUTTON OPERATION (Remote Failure)

Open front panel and locate emergency button on electronic control box. Always use insulated material to press.

Current Status	Operation	Response	Enter Mode
Standby	Press once	Brief beep	Cooling
Standby (Heat Pump only)	Press twice in 3 sec	Two brief beeps	Heating
Heating	Press once	Continuous beeping	OFF

Display Codes:
Hd = Communication error

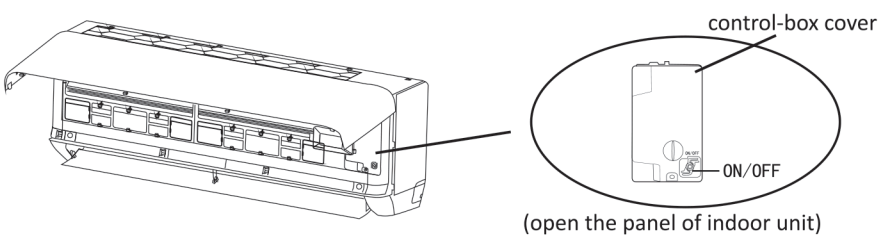

REFRIGERANT SENSOR (OPTIONAL)

Important Notes

1. The refrigerant sensor must be maintained by a professional. Only use manufacturer-specified sensors for replacement.
2. Design life of refrigerant sensor is 15 years. Replace within service life range.
3. Sensor automatically detects refrigerant concentration during operation. When concentration reaches alarm level, it activates circulating airflow and stops compressor.
4. Alarm signals:

Error Code	Display	Meaning
-	Fd	Refrigerant leak protection
-	Hd	Communication error with refrigerant sensor

5. Installation position shown in figure (appearance varies by cabinet model).
6. This unit is equipped with refrigerant leak detector for safety. Unit must remain electrically powered at all times after installation (except during servicing) for detector to function.
7. Replace refrigerant sensor only with manufacturer-approved sensor.
8. **LEAK DETECTION SYSTEM INSTALLED.** Unit must remain powered except during service.

Position of Refrigerant Sensor:

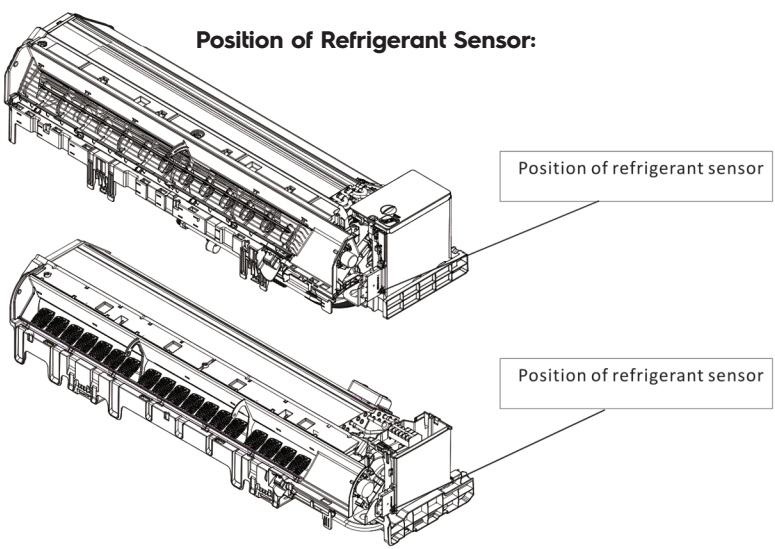

R32 SERVICING REQUIREMENTS

1. General Servicing Requirements

1. Check this manual to confirm the required space and minimum clearances for proper installation, including distances to nearby structures.
2. Install, operate, and store the unit only in rooms with a floor area larger than 4 m².
3. Keep the length of refrigerant piping as short as possible.
4. Protect piping from physical damage. Do not install piping in an unventilated space smaller than 4 m².
5. Follow all applicable national gas regulations.
6. Make sure all mechanical connections are accessible for inspection and maintenance.
7. Follow this manual for handling, installing, cleaning, maintaining, recovering, and disposing of R32 refrigerant.
8. Keep all ventilation openings clear and free of obstructions.
9. Servicing must only be performed as recommended by the manufacturer.
10. Store the appliance in a well ventilated room whose size meets the requirements specified for operation.
11. Do not store the appliance in rooms with continuously operating open flames (for example gas appliances) or other ignition sources (for example electric heaters).
12. Store the appliance so it cannot be damaged by impact, vibration, or other mechanical forces.
13. Anyone working on the refrigerant circuit must hold a valid, current certificate from an accredited authority that confirms their competence in handling refrigerants and flammable refrigerants.
14. Any work that affects safety (for example opening the refrigerant circuit, sealed components, or ventilated enclosures) must be carried out only by competent persons.
15. Do not use any method to speed up defrosting or to remove frost other than the methods described by the manufacturer.
16. Store the appliance only in rooms without continuously operating ignition sources such as open flames, gas appliances, or electric heaters.
17. Do not pierce or burn any part of the appliance.
18. Be aware that refrigerants may have little or no odor.

Caution: Risk of fire

≥Am²

A2L

Read operator's manual

Operating instructions

Read technical manual

R32 SERVICING REQUIREMENTS

2. Important Considerations (R32)

1. The air conditioner must be installed by professional personnel. The Installation Manual is intended only for qualified installation personnel, and installation must follow the manufacturer's after-sales service regulations.
2. When charging the system with flammable refrigerant, rough or careless handling can cause serious injury to people or damage to property.
3. Perform a refrigerant leak test after installation is completed.
4. Before servicing or repairing an air conditioner that uses flammable refrigerant, perform a safety inspection to reduce fire risk as much as possible.
5. Operate and service the unit under a controlled procedure to keep any risk from flammable gas or vapor as low as possible during operation.
6. Requirements for total refrigerant charge and minimum room area are given in Tables GG.1 and GG.2 in this manual.

3. Refrigerant Charge And Room Area Limitations (Overview)

- R32 is classified as a class A2L mildly flammable refrigerant under UL/CSA 60335240.
- The total refrigerant charge in the system must be less than or equal to the allowable maximum charge, which depends on the floor area of the room or rooms served by the system.
- The following definitions apply:
  - Mc: Actual refrigerant charge in the system.
  - A: Actual floor area of the room where the appliance is installed.
  - Amin: Required minimum room area.
  - Mmax: Allowable maximum refrigerant charge in a room.
  - Qmin: Minimum air circulation airflow.
  - Anvmin: Minimum natural ventilation opening area for connected rooms.

  (Details of formulas, **Tables GG.1** and **GG.2**, and connectedroom rules are handled in the **INSTALLATION PRECAUTIONS (R32)** section per your separate brief; the above is the high-level statement.)

4. Room Area And Connected Rooms (Summary For Servicing)

1. When calculating refrigerant quantity limits, consider any space that contains refrigerant-carrying parts or where refrigerant could be released.
2. Use the smallest enclosed occupied space as the room area A for determining refrigerant quantity limits.
3. Define room area A as the floor area enclosed by the projection of walls, partitions, and doors for the space where the unit is installed.
4. Spaces connected only by drop ceilings, ductwork, or similar paths are not treated as one space.
5. Units mounted higher than 7055/64 inches, and spaces separated by partitions no higher than 6263/64 inches, may be treated as a single space.

6. Rooms on the same floor connected by a permanent, full-height passageway intended for people to walk through may be treated as a single room when checking Amin.

(Details of lowlevel and high-level openings, and Anvmin calculations, remain in the installation section; servicing staff are reminded here that connected room rules apply.)

5. Information On Servicing (R32)

5.1 Area Checks

- Before working on systems containing R32, perform safety checks to minimize the risk of ignition.
- Check the work area, ventilation, and possible leak paths.
- Avoid working in confined spaces.

5.2 Work Procedure

- Use a controlled work procedure so that any flammable gas or vapor is minimized while work is in progress.

5.3 General Work Area

- Inform all maintenance staff and other people in the area about the work being done.
- Avoid work in confined spaces.
- Section off the area around the work site.
- Remove or control flammable materials to make the area safe.

5.4 Checking For Presence Of Refrigerant

- Check the area with an appropriate refrigerant detector before and during work so the technician is aware of any flammable atmosphere.
- Use leakdetection equipment that is suitable for flammable refrigerants, nonsparking, properly sealed, or intrinsically safe.

5.5 Fire Extinguishers

- If any hot work (for example brazing) is to be done on the refrigeration equipment or associated parts, keep appropriate fire extinguishing equipment close at hand.
- A dry powder or CO_2 extinguisher must be available near the charging area.

5.6 Ignition Sources

- Do not use any source of ignition in a way that could cause fire or explosion while pipework is exposed.
- Keep all possible ignition sources, including smoking materials, far from the installation, repair, removal, and disposal area when refrigerant may be released.
- Survey the area before starting work to make sure there are no flammable hazards or ignition risks.
- Display "**No Smoking**" signs.

R32 SERVICING REQUIREMENTS

5.7 Ventilation

- Work in the open air or in a well-ventilated area before opening the system or doing work that will produce heat.
- Keep ventilation running while work is being carried out.
- Ventilation should safely disperse any released refrigerant and discharge it to the outside atmosphere.

5.8 Checks On Refrigeration Equipment

- When changing electrical parts, use components that are suitable for the application and meet the correct specification.
- Always follow the manufacturer's maintenance and service instructions. If in doubt, contact the manufacturer's technical department.
- For installations with flammable refrigerant, check that:
  - The refrigerant charge is suitable for the room size.
  - Ventilation fans and outlets work properly and are not blocked.
  - If an indirect system is used, the secondary circuit is checked for refrigerant.
  - All markings and labels are visible and legible; repair or replace any that are not.
  - Refrigerant piping and components are located where they will not be exposed to corrosive substances, unless they are made of or protected by corrosionresistant materials.

5.9 Checks On Electrical Devices

- Include initial safety checks and component inspections when servicing electrical parts.
- If a fault could compromise safety, do not reconnect power until the fault is corrected. If continued operation is absolutely necessary, use a temporary but safe solution and inform the owner.
- Initial checks must confirm that:
  - Capacitors are discharged safely to avoid sparking.
  - No live electrical parts or wiring are exposed during charging, recovery, or purging.
  - Earth/ground bonding is continuous.

6. Repairs, Removal, And Recovery

6.1 Sealed Components

- Replace sealed electrical components rather than trying to repair them.

6.2 Intrinsically Safe Components

- Replace intrinsically safe components with manufacturer-approved parts only.

6.3 Cabling

- Route cables so they are not exposed to wear, corrosion, excessive pressure, vibration, sharp edges, or other harmful conditions.
- Take into account aging and continuous vibration from compressors or fans.

R32 SERVICING REQUIREMENTS

6.4 Detection Of Flammable Refrigerants

- Never use open flames or halide torches to search for or detect refrigerant leaks.

6.5 Leak Detection Methods

- Use electronic leak detectors suitable for flammable refrigerants. Calibrate them in a refrigerantfree area and set them to a maximum of 25% of the LFL.
- Leak detection fluids may be used, but detergents that contain chlorine must be avoided because they may react with the refrigerant and corrode copper piping.
- If you suspect a leak, remove or extinguish all open flames.
- If brazing is required near a leak, recover all refrigerant from the system or isolate it with shutoff valves in a remote part of the system.
- Purge the system with oxygenfree nitrogen (OFN) before and during brazing.

6.6 Removal And Evacuation

- When opening the refrigerant circuit for repairs or other reasons, follow these basic steps:
  1. Remove all refrigerant.
  2. Purge the circuit with inert gas.
  3. Evacuate the system.
  4. Purge again with inert gas.
  5. Open the circuit by cutting or brazing.
- Recover refrigerant into the correct recovery cylinders.
- Flush the system with OFN to make it safe. This may need to be repeated several times.
- Do not use compressed air or oxygen for flushing.
- To flush, break the vacuum with OFN to working pressure, vent to atmosphere, then evacuate again. Repeat until no refrigerant remains.
- After the final OFN charge, vent the system to atmospheric pressure before working on it.
- Make sure the vacuum pump outlet is located away from ignition sources and in a ventilated area.

6.7 Decommissioning

- Before decommissioning, make sure the technician is familiar with the equipment.
- Recover all refrigerant safely.
- Take oil and refrigerant samples if analysis is needed before reusing reclaimed refrigerant.
- Ensure electrical power is available before starting the procedure.
- **Steps:**
  1. Become familiar with the equipment and its operation.
  2. Isolate the system electrically.
  3. Before starting, make sure:
     - Mechanical handling equipment is available if needed for cylinders.
     - All personal protective equipment is available and used correctly.
     - The recovery process is supervised at all times by a competent person.
     - Recovery equipment and cylinders meet applicable standards.

4. Pump down the system if possible.
5. If a vacuum cannot be achieved, use a manifold to remove refrigerant from different parts of the system.
6. Place the cylinder on the scales before recovery.
7. Start the recovery machine and operate it according to the manufacturer's instructions.
8. Do not overfill cylinders (maximum 80% of liquid volume).
9. Do not exceed the cylinder's maximum working pressure, even temporarily.
10. When cylinders are filled correctly and recovery is complete, remove cylinders and equipment from the site and close all isolation valves.
11. Do not charge recovered refrigerant into another system unless it has been cleaned and checked.

6.8 Labeling

- Label equipment that has been decommissioned and emptied of refrigerant.
- Labels must show that refrigerant has been removed and must include the date and signature.
- Ensure that labels indicating "equipment contains flammable refrigerant" are present where applicable.

6.9 Recovery

- When removing refrigerant for service or decommissioning, always remove refrigerant safely.
- Use only suitable recovery cylinders designed and tested for the refrigerant and charge in use.
- Ensure enough cylinders are available to hold the total system charge.
- Cylinders must be designated and labeled for recovered refrigerant and must include a pressure-relief valve and shutoff valves in good condition.
- Evacuate empty recovery cylinders and, if possible, cool them before use.
- Use recovery equipment that is in good working order, properly maintained, and suitable for flammable refrigerants.
- Use calibrated scales and hoses with leak-free couplings.
- Check that the recovery machine is installed correctly and that electrical components are sealed to prevent ignition in case of a leak.
- Return recovered refrigerant to the supplier in proper recovery cylinders and complete any required waste transfer documentation.
- Do not mix different refrigerants in recovery equipment or in cylinders.
- Before returning compressors or oils, evacuate them to a safe level so that flammable refrigerant does not remain trapped in the lubricant.
- Use only electric heating on compressor bodies if heating is needed to speed evacuation.
- Drain oil safely.

R32 SERVICING REQUIREMENTS

6.10 Final Warnings And Statements (R32)

- Do not use any methods to accelerate defrosting or cleaning other than those recommended by the manufacturer.
- Store the appliance only in rooms without continuously operating ignition sources such as open flames, gas appliances, or electric heaters.
- Do not pierce or burn the appliance.
- Remember that refrigerant may have little or no odor.
- Before unloading and opening containers, check for leaks with a flammable gas detector.
- Do not use open flames or smoke in the area.
- Protect pipework from physical damage. Do not install flammable refrigerant piping in unventilated spaces smaller than the minimum area Amin, except where A2L piping complies with UL 60335240 clause requirements.
- When systems are field-charged, account for the effect of pipe length on total refrigerant charge.
- Always comply with national gas regulations.
- The unit is shipped with a flammable refrigerant charge. When joining charged parts of the system during installation:
  - Complete brazed, welded, or mechanical joints before opening valves to allow refrigerant flow between system parts.
  - Provide a vacuum valve to evacuate interconnecting piping and any uncharged system parts.
  - Mechanical connectors used indoors must meet ISO 14903. Renew sealing parts when reusing mechanical connectors indoors. Refabricate flares when reusing flared joints indoors.
  - Protect refrigerant tubing against damage or enclose it.
  - Protect flexible connectors that may move during normal operation against mechanical damage.
- Provide protection from physical damage for all pipework (materials, routing, and installation), and comply with national and local codes such as ASHRAE 15, ASHRAE 15.2, IAPMO Uniform Mechanical Code, ICC International Mechanical Code, or CSA B52. Ensure all field joints are accessible for inspection before covering or enclosing them.
- After field piping is complete for split systems, pressuretest pipework with inert gas and then vacuumtest before charging with refrigerant.
- Store the appliance so that it cannot be damaged mechanically.
- Ensure that maintenance, service, and repair work affecting safety is carried out only by competent persons (for example breaking into the refrigerant circuit, opening sealed components, or opening ventilated enclosures).

INSTALLATION PRECAUTIONS (R32)

Important: Installation must be performed only by licensed HVAC professionals. This manual is for qualified installation personnel only. Follow all local codes and after-sale service regulations.

1. The air conditioner must be installed by professional personnel. The Installation Manual is for professional installers only, and installation must follow the manufacturer's aftersales service regulations.
2. **WARNING**: When charging the system with flammable R32 refrigerant, rough or careless handling can cause serious injury or damage to people and property.
3. Perform a refrigerant leak test after installation is completed.
4. Before servicing or repairing an air conditioner using flammable refrigerant, carry out a safety inspection to reduce fire risk to a minimum.
5. Operate and service the unit under a controlled procedure to keep any risk from flammable gas or vapor as low as possible.
6. Requirements for total refrigerant charge and minimum room area are shown in Tables GG.1 and GG.2 in this section.

Refrigerant Charge And Room Area Limits (R32)

For R32 (A2L) refrigerant, the total refrigerant charge in the system must not be higher than the maximum allowable charge for the room or rooms being served. These limits follow UL/CSA 60335240 requirements for A2L refrigerants.

Definitions:

- LFL (lower flammable limit) for R32 = **0.306 kg/m³**.
- m = (6 m³) × LFL, m = (52 m³) × LFL, m = (260 m³) × LFL

  For appliances where the refrigerant charge M satisfies $m_1 < M = m_2$:
- **Maximum charge in a room:**

  Mmax = 2.5 × (LFL)^(5/4) × h_0 × (A)^(1/2) and must not exceed Mmax = SF × LFL × h_0 × A)
- **Minimum floor area for charge M (kg):**

  Amin = [M / (2.5 × (LFL)^(5/4) × h_0)]² and must not be less than Amin = M / (SF × LFL × h_0)

NOTE: Key Terms

- M_a: Actual system refrigerant charge
- **A**: Actual room area where appliance is installed
- A_{min}: Required minimum room area
- M_{max}: Maximum allowable refrigerant charge per room
- Q_{min}: Minimum circulation airflow
- A_{nvmin}: Minimum opening area for connected rooms

INSTALLATION PRECAUTIONS (R32)

Room Area Calculation Requirements

CAUTION: Consider any space containing refrigerant parts or where refrigerant could leak.

Room area (A): = Smallest enclosed, occupied space used for refrigerant quantity limits could leak.

Room area determination guidelines:

- Floor area enclosed by wall, partition, and door projections
- Spaces connected only by drop ceilings, ductwork, or similar are not considered one space

Connected Room Requirements

Units mounted higher than **70-55/64 inches** and spaces divided by partition walls no higher than **62-63/64 inches** shall be considered a single space.

Rooms on the same floor connected by an open passageway may be considered a single room when determining compliance with **A_{min}**, provided the passageway meets **all** of the following:

1. Permanent opening
2. Extends to the floor
3. Intended for people to walk through

The total area of connected rooms on the same floor—linked by permanent openings in walls and/or doors between occupied spaces (including gaps between wall and floor)—may be considered a single room for **A_{min}** compliance, provided **all** conditions in **Fig. 2-1** are met.

1) Low-Level Opening Requirements

- Opening area ≥ **A_{nvmin} (Table 2-1)**
- Openings above **11-13/16 inches** from floor **not counted** toward **A_{nvmin}**
- **≥ 50% of A_{nvmin}** below **7-7/8 inches** from floor
- Bottom of opening ≤ **3-15/16 inches** from floor
- Permanent opening that **cannot be closed**
- For floor-extending openings: height **≥ 25/32 inches** above floor covering surface

2) High-Level Opening Requirements

- Opening area ≥ **50% of A_{nvmin}** (Table 2-1)
- Permanent opening that **cannot be closed**
- Opening **≥ 59 inches** above floor
- Opening height **≥ 25/32 inches**

INSTALLATION PRECAUTIONS (R32)

NOTE: Second opening requirement may be met by drop ceilings, ventilation ducts, or similar airflow paths between connected rooms.

A_{nvmin} (minimum natural ventilation opening) for connected rooms depends on:

- Room area **(A)**
- Actual refrigerant charge **(M_c)**
- Maximum allowable refrigerant charge **(M_{max})**

Refer to **Table 2-1** for determination.

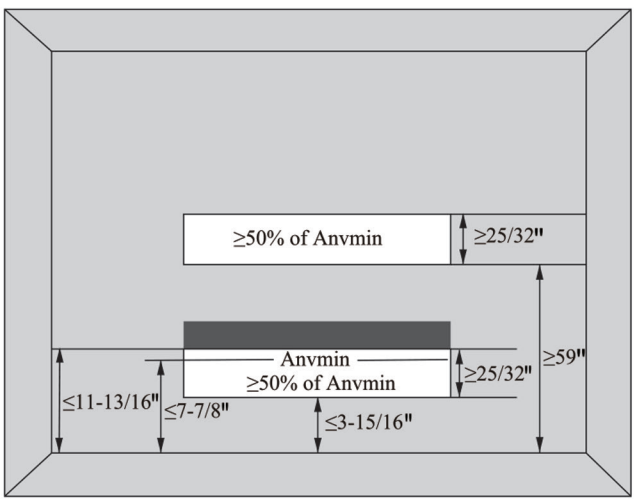

Fig. 2-1 Opening Conditions for Connected Rooms

INSTALLATION PRECAUTIONS (R32)

Minimum Opening Area for Connected Rooms

NOTE: Example using **M_c = 1.73 kg**

Table 2.1 - Minimum Ventilation Opening (A_{nvmin})

A (m^2)	M_c (kg)	M_{max} (kg)	A_{nvmin} (m^2)
4	1.73	1.48	0.0058
7	1.73	2.59	0.0000
10	1.73	3.70	0.0000
15	1.73	5.55	0.0000
20	1.73	7.40	0.0000
30	1.73	11.10	0.0000

Indoor Unit Minimum Airflow (Refrigerant Leak Detection)

Model	Minimum Airflow
9K	110 m^3/h
12K	230 m^3/h
18K	380 m^3/h
24K	450 m^3/h

Table GG.1 - Maximum Refrigerant Charge (kg)

Category	LFL (kg/m^3)	h_0(m)	Floor area (m^2)						
			4	7	10	15	20	30	50
R32	0.306	2.5	1.53	2.68	3.83	5.51	6.36	7.79	10.06
		2.8	1.71	3.00	4.28	6.17	7.12	8.73	11.27
		3.0	1.84	3.21	4.59	6.61	7.63	9.35	12.07

INSTALLATION PRECAUTIONS (R32)

Table GG.2 - Minimum Room Area (m²) for R32 Charge

Indoor unit must be installed ≥ 8.2 ft (2.5 m) above floor.

Category	LFL (kg/m³)	h_0(m)	Charge amount (M) (kg) Minimum room area (m²)						
			0.58kg	**0.60**kg	**1**kg	**1.07**kg	**1.20**kg	**1.58**kg	**2**kg
R32	0.306	2.5	1.52	1.57	2.61	2.80	3.14	4.13	5.23
		2.8	1.35	1.40	2.33	2.50	2.80	3.69	4.67
		3.0	1.26	1.31	2.18	2.33	2.61	3.44	4.36

R32 Charge Specifications by Model

Model	R32 Standard (g)	R32 Maximum (g)
SAC09SHV23-1	600	675
SAC09SNV23-1	550	625
SAC12SNV23-1	770	845
SAC18SHV22-1	870	995
SAC24SHV22-1	1270	1395

Verify your model specifications. Indoor/outdoor units are designed as matched pairs. Use the table above to confirm minimum room area for operation/storage.

INSTALLATION PRECAUTIONS (R32)

1. Site Safety Principles

Open Flames Prohibited

Ventilation Necessary

Mind Static Electricity

Must wear protective clothing

Must wear anti-static gloves

Do not use mobile phone

2. Operation Safety Principles

Open Flames Prohibited

Must wear anti-static gloves

Site And Installation Safety (R32)

- The installation site must be well-ventilated.
- Do not install or service an R32 unit in areas with open flames, welding, smoking, drying ovens, or any other heat source above 548 °C (1018 °F) that can easily ignite gases.
- During installation, wear antistatic clothing and/or antistatic gloves as needed to prevent static electricity sparks.
- Choose locations where indoor and outdoor air inlets and outlets are not blocked by obstacles and are not close to heat sources, combustible materials, or explosive atmospheres.
- If the indoor unit leaks refrigerant during installation, immediately close the outdoor unit valve, evacuate all people, and wait at least 15 minutes until the leaked refrigerant has dispersed. If the product is damaged, send it back to the service center. Do not weld refrigerant pipes or carry out other repairs at the user's site.
- Avoid installing units directly above electrical products, power switches, sockets, kitchen cabinets, beds, sofas, or other valuables.

INSTALLATION PRECAUTIONS (R32)

Installation Safety

- **Refrigerant Leak Detector**
- **Appropriate Installation Location**

The left diagram shows refrigerant leak detector schematic.

Please note the following critical safety requirements:

1. **Well-ventilated installation sites required.**
2. Sites for installing/maintaining R32 air conditioners must be **free from** open flames, welding, smoking, drying ovens, or **any heat source > 548°F** that could produce ignition.
3. **Anti-static measures mandatory:** Wear anti-static clothing and/or gloves during installation.
4. Select locations where indoor/outdoor unit air inlets/outlets are **unobstructed** and **not near** heat sources, combustibles, or explosive environments.
5. **EMERGENCY PROCEDURE** - If indoor unit leaks refrigerant during installation:

- **Immediately close outdoor unit valves**
- **Evacuate all personnel for 15 minutes** until refrigerant dissipates
- **Damaged units MUST return to service center - No welding or repairs on-site**

6. Choose locations ensuring **even indoor airflow distribution.**
7. **Avoid installing** above electrical products, power switches/plugs/sockets, kitchen cabinets, beds, sofas, or other valuables.

Suggested Tools

Tool	Picture	Tool	Picture	Tool	Picture
Standard Wrench		Pipe Cutter		Vacuum Pump	
Adjustable/ Crescent Wrench		Screw drivers (Phillips & Flat blade)		Safety Glasses	
Torque Wrench		Manifold and Gauges		Work Gloves	
Hex Keys or Allen Wrenches		Level		Refrigerant Scale	
Drill & Drill Bits		Flaring tool		Micron Gauge	
Hole Saw		Clamp on Amp Meter			

INSTALLATION PRECAUTIONS (R32)

Pipe Length and Additional Refrigerant

Inverter Models Capacity (Btu/h)	9K	12K	18K	24K
Length of pipe with standard charge	4m/13.12ft	4m/13.12ft	4m/13.12ft	4m/13.12ft
Maximum distance between indoor and outdoor unit	15m/50ft	15m/50ft	20m/67ft	20m/67ft
Additional refrigerant charge	10g/m	10g/m	10g/m	10g/m
Max. diff. in level between indoor and outdoor unit	10m/33ft	10m/33ft	15m/49ft	15m/49ft
Type of refrigerant	R32			

Torque Parameters

PIPE Size	Newton meter[N x m]	Pound-force foot (lbf-ft)	Kilogram-force meter (kgf-m)
1/4 " (ϕ 6.35)	15 - 20	11.1 - 14.8	1.5 - 2.0
3/8 " (ϕ 9.52)	31 - 35	22.9 - 25.8	3.2 - 3.6
1/2 " (ϕ 12)	45 - 50	33.2 - 36.9	4.6 - 5.1
5/8 " (ϕ 15.88)	60 - 65	44.3 - 48.0	6.1 - 6.6

Dedicated Distribution Device and Wire of Air Conditioner

Wiring material ampacities	AWG
4	22
7	20
10	18
13	16
18	14
25	12
30	10
40	8
55	6
70	4

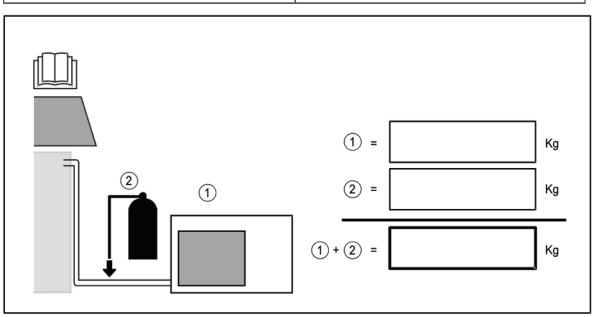

su3098 IEC

Key

Example 1: REFRIGERANT CHARGE of the precharged part of the appliance

Example 2: REFRIGERANT CHARGE added during installation

⚠ **NOTE: This table is only for reference, the installation shall meet the requirements of the local laws and regulations.**

INDOOR UNIT INSTALLATION

Step 1: Select Installation Location

1.1 Ensure installation complies with **minimum dimensions**, **connecting pipe length**, and **elevation change limits** specified in System Requirements section.

1.2 Air inlet/outlet **clear of obstructions** for proper room airflow.

1.3 **Condensate drain** easily accessible and safely routed.

1.4 **All connections** easily made to outdoor unit

1.5 Indoor unit **out of children's reach**.

1.6 **Mounting wall** supports **4× unit weight + vibration**.

1.7 **Filter access** unobstructed for cleaning.

1.8 **Adequate space** for routine maintenance access.

1.9 Install **≥10 ft (3m)** from TV/radio antennas. May require amplifier if reception is weak.

1.10 **Avoid laundry rooms** or **swimming pool areas** due to corrosive environment.

1.11 **ETL Certification Requirement:** Lowest moving parts **≥ 8 ft (2.4m)** above floor/grade level.

Minimum Indoor Clearances

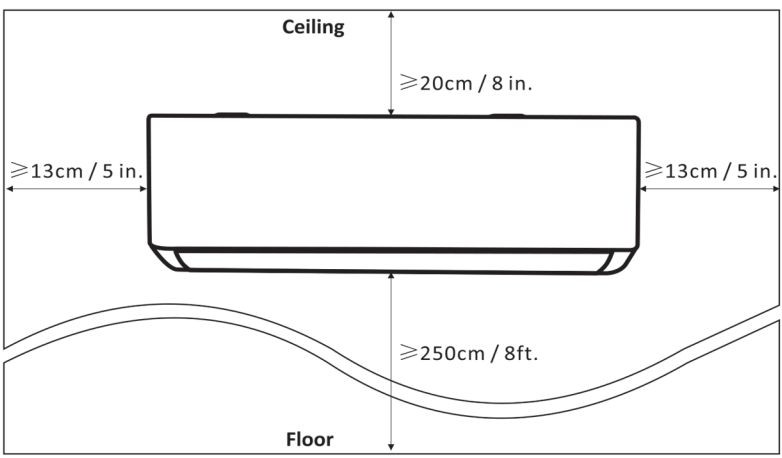

Key Clearances:

- **Front:** 75 cm (30″) minimum
- **Sides:** 25 cm (10″) minimum each side
- **Top (Ceiling):** 79 cm (31″) minimum
- **Bottom:** Mounting bracket per specifications

INDOOR UNIT INSTALLATION

Step 2: Install Mounting Plate

2.1 Remove mounting plate from indoor unit accessory package.

2.2 Position plate per **Step 1 minimum dimensions.** Level plate and mark screw locations on wall.

2.3 Verify plate is **level** using spirit level, then mark screw hole positions.

2.4 Remove plate and **drill holes** at marked positions.

2.5 Insert **expansion anchors**, hang mounting plate, and **secure with screws**.

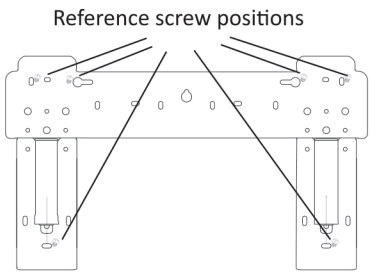

NOTE: Ensure plate is **firm and flat** against wall.

(II) Actual plate may differ from illustration.

Step 3: Drill Wall Hole

Wall hole required for **refrigerant piping, drainage**, and **connecting cables**.

3.1 Position hole based on mounting plate location.

3.2 Drill **Ø70 mm (2-3/4") hole** with **5-10 mm slope** toward outdoor (lower indoor end).

3.3 Use **70 mm core drill** with small oblique angle (indoor end 5-10 mm higher).

3.4 Install **wall sleeve** and **cover** (optional) to protect connections.

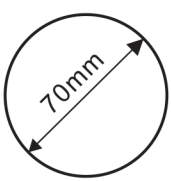

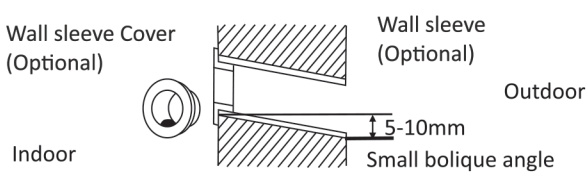

⚠ **CAUTION:** Avoid electrical wires, plumbing, and sensitive components when drilling.**

INDOOR UNIT INSTALLATION

Step 4: Connect Refrigerant Piping

4.1 Select piping mode based on wall hole position. Three optional indoor piping modes shown below:

Piping Modes 1 or 3: Cut plastic sheet at piping outlet and cable outlet using scissors.

Note: Trim cut edges smooth to prevent damage.

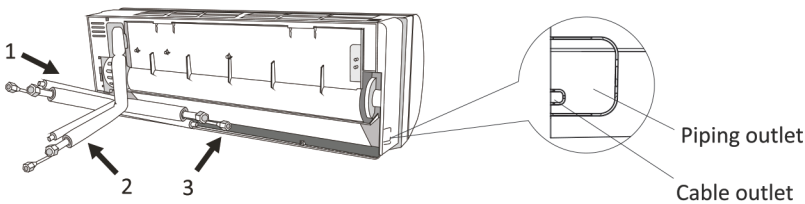

4.2 Bend connecting pipes with port facing up (hook shape).

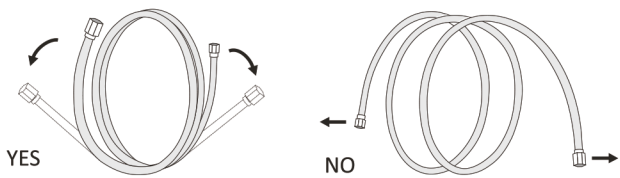

4.3 Remove plastic covers from pipe ports and **protective caps** from piping ends.

4.4 Inspect pipe ports for debris. **Ensure completely clean.**

4.5 Align centers, then **hand-tighten** flare nuts finger-tight.

4.6 **Torque tighten** per **Installation Precautions torque table** values.

4.7 Wrap all joints with **insulation tape**.

Note: Trim When flared joints are reused indoors, the flare part shall be re-fabricated.

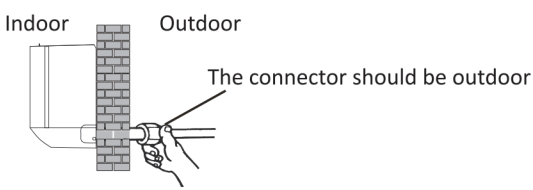

⚠ **CAUTION:** Improper flaring causes refrigerant leaks. Follow exact torque specs.

INDOOR UNIT INSTALLATION

Step 5: Connect Drainage Hose

5.1 Select drain port (some models have ports on both sides). Attach drainage hose to chosen port. **Plug unused port** with supplied rubber plug.

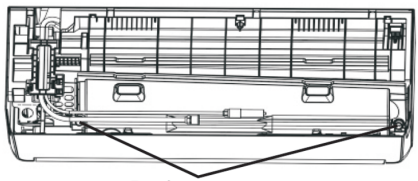

5.2 Connect hose securely to drainage port.

5.3 Wrap joint with **Teflon tape** for leak-proof seal.

Note: Route hose **obliquely downward** with **no twists/kinks** to prevent blockage.

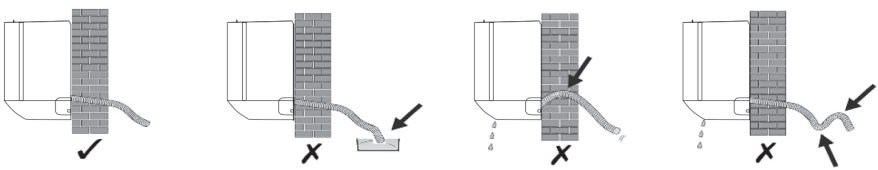

Step 6: Connect Wiring

6.1 Select cable size per **nameplate maximum operating current** (see INSTALLATION PRECAUTIONS).

6.2 Open indoor unit **front panel**.

6.3 Remove **electric control box cover** using screwdriver to access terminal block.

6.4 Loosen **cable clamp**.

6.5 Route cable through **right end knockout** into control box.

6.6 Connect wires to terminals per **wiring diagram** on control box cover.

6.7 Tighten **cable clamp** to secure wires.

6.8 Reinstall **control box cover** and **front panel**.

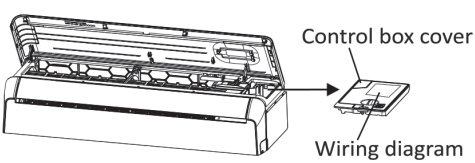

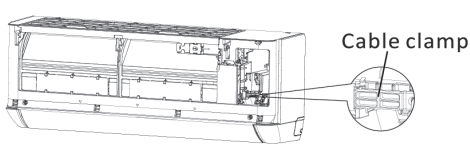

INDOOR UNIT INSTALLATION

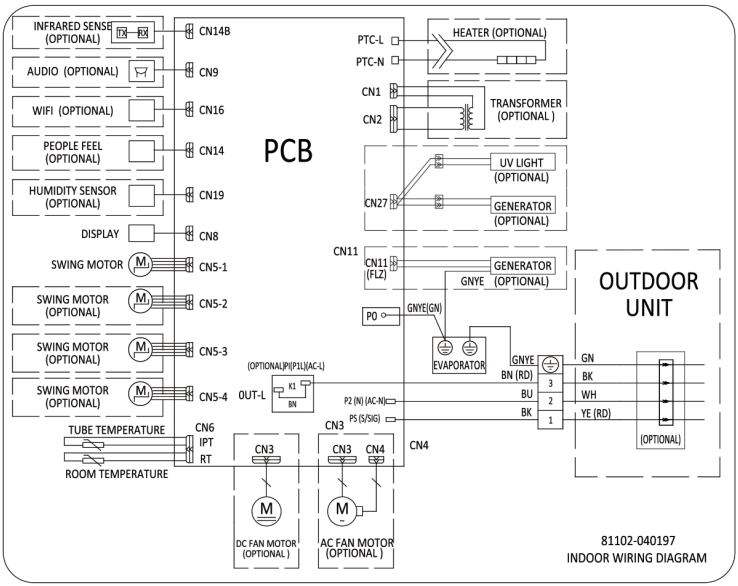

9K/12K/18K (Wiring Diagram)

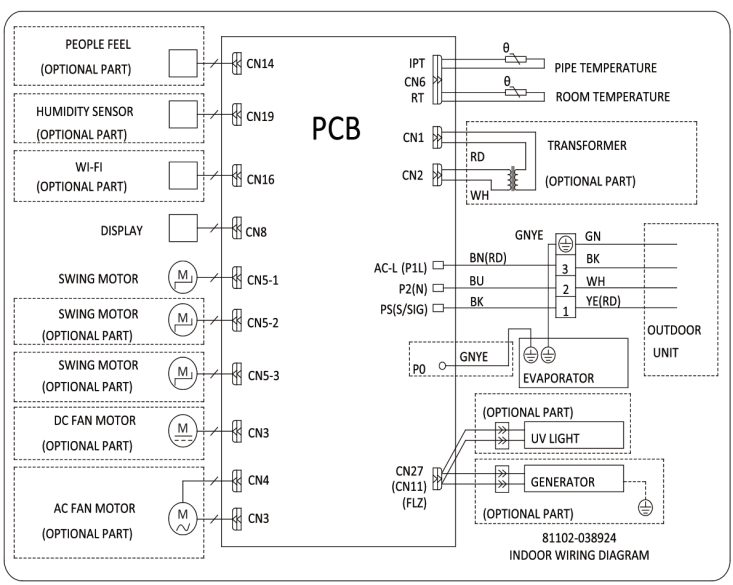

24K (Wiring Diagram)

INDOOR UNIT INSTALLATION

Step 7: Wrap Piping and Cable

After installing refrigerant pipes, wires, and drain hose, **bundle with insulation tape** to save space and protect components before passing through wall hole.

7.1 Arrange piping, cables, and drain hose as shown:

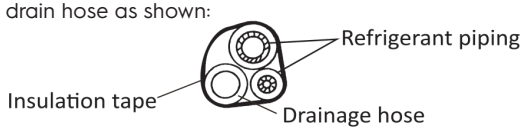

Notes:

- **Drain hose at bottom**
- **No crossing/bending** of components

7.2 Wrap **refrigerant pipes + wires + drain hose** tightly with insulation tape.

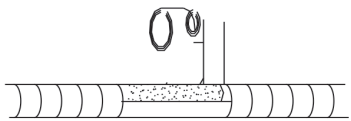

Step 8: Mount Indoor Unit

8.1 Pass wrapped bundle (pipes + wires + drain hose) **slowly through wall hole.**

8.2 Hook **top of indoor unit** onto mounting plate.

8.3 Apply slight pressure to **left/right sides** until securely hooked.

8.4 Push **bottom of unit down** onto mounting plate hooks until snaps lock.

For pre-embedded piping or wall connections:

(I) Remove bottom plate by pulling outward on both ends.

(II) Hook top of unit onto mounting plate (no piping yet).

(III) Lift unit away from wall, unfold mounting plate bracket to prop unit (creates workspace).

(IV) Complete piping/wiring/drain per Steps 4-7.

(V) Refold mounting plate bracket.

(VI) Snap bottom onto mounting plate hooks.

(VII) Reinstall bottom plate.

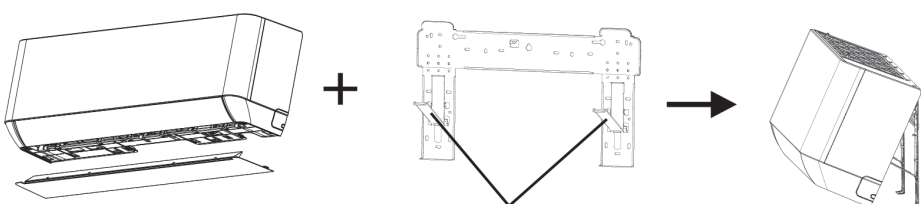

Take off the bottom plate

Unfold the bracket on the mounting plate

OUTDOOR UNIT INSTALLATION

Step 1: Select Installation Location
Select site meeting all requirements below:

1.1 **Avoid** heat sources, steam, or flammable gas.
1.2 **Avoid** high wind/dust areas.
1.3 **Away from** high-traffic areas. Sound must **not disturb neighbors**.
1.4 **Away Protect from direct sunlight** (use shield if needed - must allow airflow).
1.5 **Minimum clearances** for air circulation (see diagram).
1.6 **Stable, solid mounting surface.**
1.7 **Vibration isolation:** Place **rubber blankets** under feet if needed.

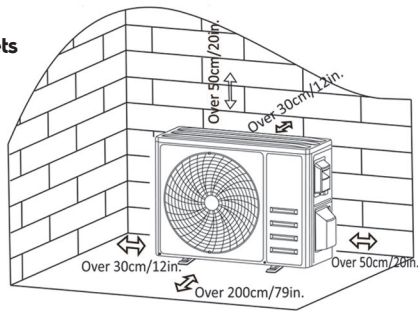

Step 2: Install Drainage Hose (Heat Pump/RCAC Models Only)

2.1 Insert **drainage joint** into bottom hole of outdoor unit.
2.2 Connect **drainage hose** securely to joint.

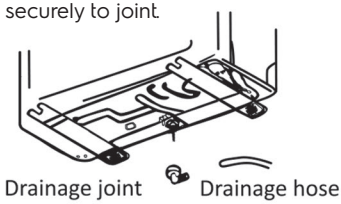

Step 3: Fix Outdoor Unit

3.1 Mark **expansion bolt positions** per outdoor unit dimensions.
3.2 Drill holes, **clean concrete dust**, install bolts.
3.3 **Optional:** Install **4 rubber blankets** in holes to reduce vibration/noise.
3.4 Position unit base over bolts/pre-drilled holes.
3.2 **Tighten securely** with wrench.

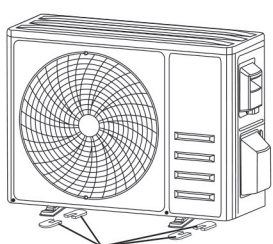

Install 4 rubber blankets (Optional)

Wall Mounting Option:

- **Use wall-mounting bracket** (supports **≥ 4× unit weight**)
- Fasten bracket to wall, then secure unit **level**

⚠ **CAUTION:** Improper mounting causes vibration, noise, or unit failure.

OUTDOOR UNIT INSTALLATION

Step 4: Install Wiring

4.1 Use Phillips screwdriver to **unscrew wiring cover**. Grasp and gently press down to remove.

4.2 Unscrew and remove **cable clamp**.

4.3 Connect wires to terminals per wiring diagram on wiring cover underside. **Verify all connections secure.**

4.4 Reinstall **cable clamp** and **wiring cover.**

Note: When connecting the wires of indoor and outdoor units, the power should be off.

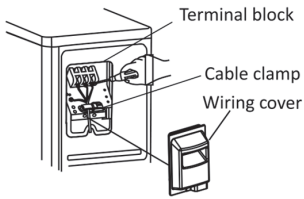

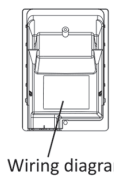

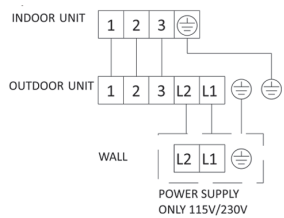

Wiring Diagrams

9K-12K (115V):

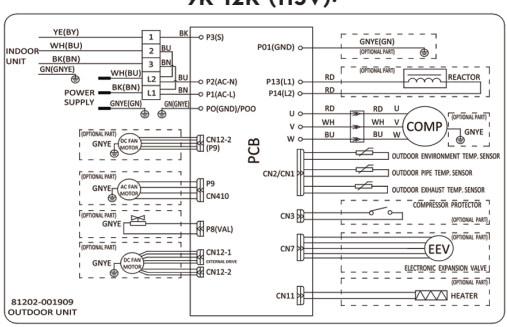

9K/12K/18K/24K (230V):

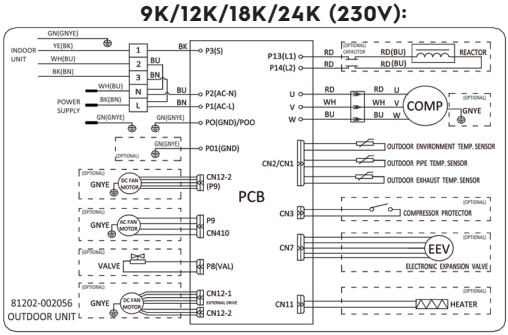

CRITICAL:
Incorrect wiring creates fire/electrical shock hazard. Verify before powering on.

⚠ **NOTE:** Power supply to outdoor unit only (115V/230V). Indoor/outdoor wiring per diagram.

OUTDOOR UNIT INSTALLATION

Electrical Specifications

Model	Voltage	MCA	MOP (Breaker)
SAC09SNV23-1	115V	15	20A
SAC12SNV23-1	115V	16	25A
SAC09SHV23-1	208-230V	10	15A
SAC12SHV23-1	208-230V	11	15A
SAC18SHV22-1	208-230V	12	20A
SAC24SHV22-1	208-230V	17	25A

Step 5: Connect Refrigerant Piping

5.1 Remove **valve cover** (if equipped): Unscrew, grasp, press down gently.

5.2 Remove **protective caps** from service valves.

5.3 Remove plastic covers from pipe ports. **Inspect for debris** - ensure clean.

5.4 Align centers, **hand-tighten** flare nuts finger-tight.

5.5 **Two-wrench method**: Hold valve body with spanner, torque flare nut per **INSTALLATION PRECAUTIONS table**.

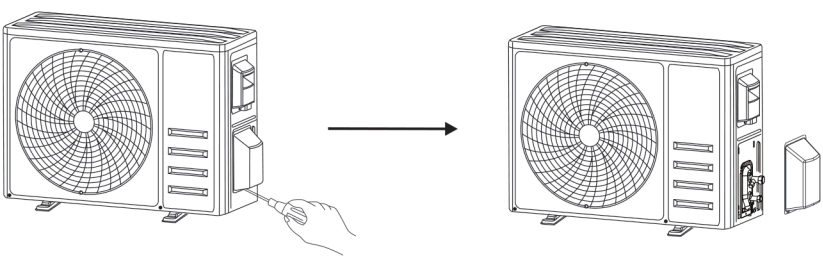

Take down the valve cover

⚠ **CAUTION:** Use exact torque values. Under/over-tightening causes leaks.

OUTDOOR UNIT INSTALLATION

Step 6: Vacuum Pumping and Leak Test

6.1 Remove protective caps from service port, low/high pressure valves using hex wrench.

6.2 Connect **manifold gauge pressure hose** to outdoor unit **low pressure service port.**

6.3 Connect **charge hose** from manifold gauge to **vacuum pump**.

6.4 Open **low pressure valve** on manifold gauge. **Close high pressure valve.**

6.5 Run **vacuum pump ≥ 15 minutes** until compound gauge reaches **-0.1 MPa (-76 cmHg)**.

6.6 Close **low pressure manifold valve**. Turn off vacuum pump.

6.7 Hold vacuum **5 minutes**. Gauge rebound ≤ **0.005 MPa.**

6.8 Open low pressure valve **1/4 turn** (5 seconds) to break vacuum, then close quickly. Disconnect charge hose.

6.9 Test **all joints** with **soapy water** or **electronic leak detector.**

6.10 **Fully open** low/high pressure valves with hex wrench.

6.11 Reinstall **all protective caps**.

6.12 Reinstall **valve cover**.

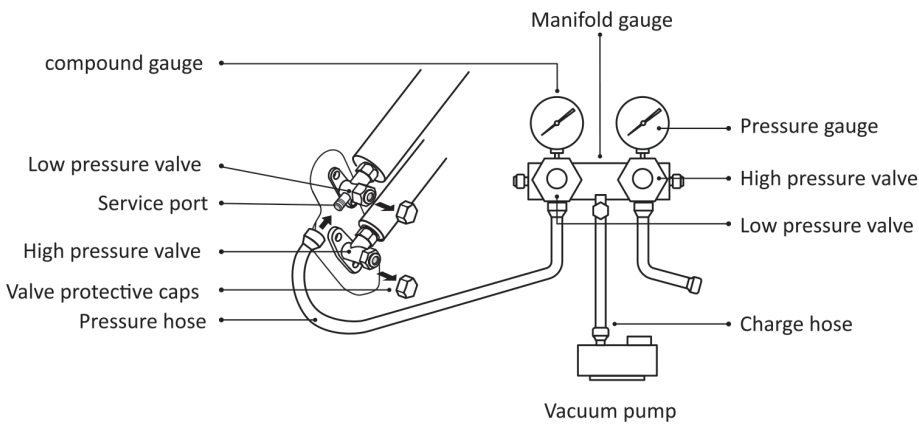

⚠ **FAILING VACUUM TEST = LEAKS. Do not charge system.**

TEST OPERATION

Pre-Test Run Inspections

DESCRIPTION	INSPECTION METHOD
Electrical Safety	● Verify power supply voltage matches specifications ● Check power/signal/earth wire connections ● Confirm earth/insulation resistance meets requirements
Installation Safety	● Verify drainage pipe direction/smoothness ● Confirm refrigerant pipe joints complete ● Check outdoor unit/mounting plate/indoor unit security ● Verify **all valves fully open** ● Confirm no tools/foreign objects inside unit ● Install air inlet grille/panel
Refrigerant Leak Detection	● Inspect piping joints, outdoor valves, weld points ● **Foam method:** Apply soapy water, check for bubbles ● **Leak detector:** Use electronic detector per instructions ● **≥ 3 minutes per location** ● Tighten nuts if leaks found, retest ● Wrap exposed joints with insulation tape

Test Run Instructions

1. Turn **power ON**.
2. Press **ON/OFF** on remote to start unit.
3. Set **COOL** (lowest temp) → Run **8 minutes**
   Set **HEAT** (highest temp) → Run **8 minutes.**
4. Verify all functions respond to remote:
   - 4.1 Outlet air temp changes (cool/heat).
   - 4.2 **Drainage flows properly**
   - 4.3 Louver/deflectors (if equipped) operate correctly

⚠ **FAIL = Do NOT commission system. Recheck all connections/installation.**

TEST OPERATION

Complete Test Run

5. **Monitor operation ≥ 30 minutes.**
6. Return to normal settings, press **ON/OFF** to shut down.
7. User handover: Demonstrate operation, maintenance, accessory storage.

NOTE: If ambient temp exceeds operating range, use **emergency button** (front panel) for COOL/HEAT.

MAINTENANCE

⚠ **WARNING:**

- **Power OFF ≥ 5 minutes** before cleaning
- **Never flush with water**
- **No volatile cleaners** (thinner/gasoline) **-** use **soft dry cloth** or **neutral detergent**
- Clean **filter regularly** (more frequent in dusty areas)
- **Do not touch indoor fins** after filter removal

Filter Cleaning:

TIP: Frequent cleaning maintains performance.

1. Grasp handle, pull filter **upward/outward**
2. Rinse, dry completely
3. Insert **bottom edge first**, snap **top edge** into place

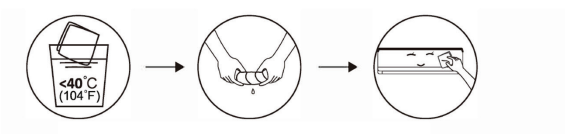

Wring dry → Gently wipe unit surface

Filter Disassembly and Assembly (Detailed)

- Grasp **raised handle** on filter and pull outward in direction away from unit to **separate upper edge** of filter from unit.
- Lift filter **upwards** to remove completely.
- To reinstall, insert **lower end** of filter into designated slot first.
- Then **press upper end** of filter into buckling position in unit, securing firmly.

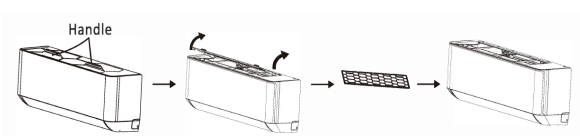

MAINTENANCE

Filter Cleaning Sequence

Take out the filter from the unit → Clean the filter with soapy water and air dry it → Replace the filter

TIP: Clean immediately when dust accumulates to ensure clean, healthy, efficient air conditioner operation

Cleaning Inner Air Duct

1. Loosen **knob** at louver center, bend **louver outward** to remove.
2. Grasp both sides of **bottom plate**, push **downward** to remove.
3. Release **deflector assembly buckle** with thumb to remove.
4. Wipe **air duct** and **fan assembly** with clean, wrung-out wet rag.
5. Wash removed parts (**louver, deflector, bottom plate**) with soapy water; **air dry completely** (<104°F/40°C).
6. Reinstall parts in **reverse order.**

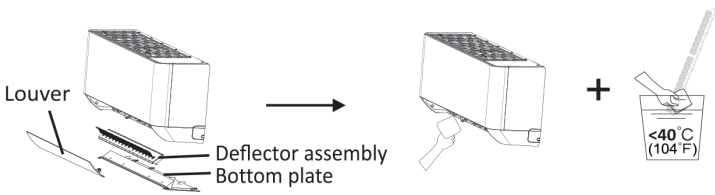

Service & Long-Term Storage

Not in use (long term):

- Remove **remote batteries**
- Disconnect **power supply**

Restarting after long shutdown:

1. Clean **unit** and **filter screen.**
2. Check **air inlets/outlets** (indoor/outdoor) for obstructions
3. Verify **drain pipe** unobstructed
4. Install **remote batteries**, confirm **power ON**

TROUBLESHOOTING

MALFUNCTION	POSSIBLE CAUSES
Appliance does not operate	● Power failure or plug pulled out ● Damaged indoor/outdoor unit fan motor ● Faulty compressor thermomagnetic circuit breaker ● Faulty protective device or fuses ● Loose connections or plug pulled out ● Unit stops operating to protect appliance ● Voltage higher/lower than rated range ● Active TIMER-ON function ● Damaged electronic control board
Strange odor	● Dirty air filter
Noise of running water	● Back flow of liquid in refrigerant circuit
Fine mist from air outlet	● Occurs when room air becomes very cold ("COOLING" or "DEHUMIDIFYING/DRY" modes)
Strange noise	● Expansion/contraction of front panel due to temperature variations (normal)
Insufficient airflow (hot or cold)	● Unsuitable temperature setting ● Obstructed air conditioner intakes/outlets ● Dirty air filter ● Fan speed set to minimum ● Other heat sources in room ● No refrigerant
Appliance does not respond to commands	● Remote control not close enough to indoor unit ● Remote control batteries need replacement ● Obstacles between remote and indoor unit signal receiver
Display is off	● Active DISPLAY function ● Power failure

TROUBLESHOOTING

⚠ Immediate Shutdown Required:

- Strange noises during operation
- Faulty electronic control board
- Faulty fuses/switches
- Spraying water/objects inside appliance
- Overheated cables/plugs
- Strong smells from appliance

Error Codes

DISPLAY	DESCRIPTION
E1	Indoor room temperature sensor fault
E2	Indoor pipe temperature sensor fault
E3	Outdoor pipe temperature sensor fault
E4	Refrigerant system leakage or fault
E5	Malfunction of indoor fan motor
E6	Outdoor ambient temperature sensor fault
E7	Indoor and outdoor communication fault
E8	Outdoor discharge temperature sensor fault
E9	Outdoor IPM module fault
EH	Outdoor current detect fault
EE	Outdoor PCB EEPROM fault
Ec	Outdoor fan motor fault
EN	Outdoor suction temperature sensor fault

DISPOSAL GUIDELINE

⚠ **Contains refrigerant + hazardous materials. Special handling required.**
DO NOT dispose as household/municipal waste.

Approved disposal options:

- Designated **municipal e-waste facility**
- **Retailer take-back** (free with new purchase)
- **Manufacturer take-back** (free)
- Certified **scrap metal dealers**

⚠ **NEVER dispose in forests/natural areas -** hazardous substances leach into groundwater/food chain.

ELECTROLUX is a pending or registered trademark used under license from AB Electrolux (publ).