ELECTRIC RANGE TOP

RT36A thru RT36G
RTI36

Installation and Operation Instructions

2M-W1091 Rev. H 2/17/15

RT36

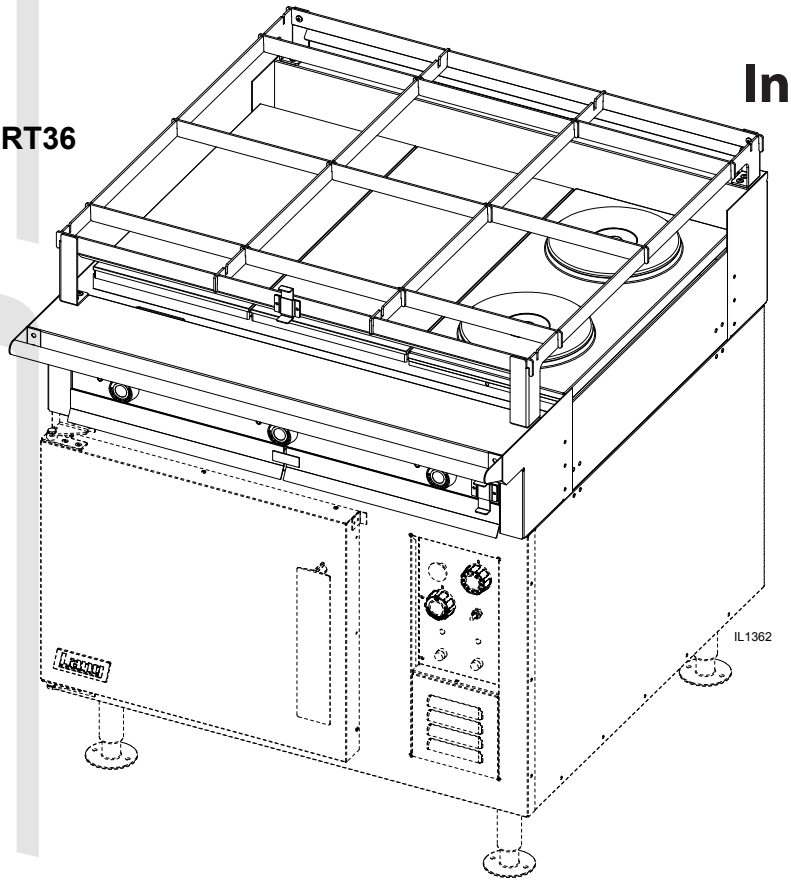

FCOF-AT

SAFETY SYMBOL

These symbols are intended to alert the user to the presence of important operating and maintenance instructions in the manual accompanying the appliance.

FOR YOUR SAFTEY

DO NOT STORE OR USE GASOLINE OR OTHER FLAMMABLE VAPORS AND LIQUIDS IN THE VICINTIY OF THIS OR ANY OTHER APPLIANCE.

POST IN PROMINENT LOCATION

INSTRUCTIONS TO BE FOLLOWED IN THE EVENT USER SMELLS GAS. THIS INFORMATION SHALL BE OBTAINED BY CONSULTING YOUR LOCAL GAS SUPPLIER. AS A MINIMUM, TURN OFF THE GAS AND CALL YOUR GAS COMPANY AND YOUR AUTHORIZED SERVICE AGENT. EVACUATE ALL PERSONNEL FROM THE AREA.

WARNING

IMPROPER INSTALLATION, ADJUSTMENT, ALTERATION, SERVICE OR MAINTENANCE CAN CAUSE PROPERTY DAMAGE, INJURY OR DEATH. READ THE INSTALLATION, OPERATION & MAINTENANCE INSTRUCTIONS THOROUGHLY BEFORE INSTALLING OR SERVICING THIS EQUIPMENT.

WARNING

RISK OF FIRE OR ELECTRIC SHOCK
DO NOT OPEN

WARNING, TO REDUCE THE RISK OF ELECTRICAL SHOCK, DO NOT REMOVE CONTROL PANEL. NO USER-SERVICABLE PARTS INSIDE.
REPAIRS SHOULD BE DONE BY AUTHORIZED SERVICE PERSONNEL ONLY.

NOTICE

Using any part other than genuine Lang factory supplied parts relieves the manufacturer of all liability.

Lang reserves the right to change specifications and product design without notice. Such revisions do not entitle the buyer to corresponding changes, improvements, additions or replacements for previously purchased equipment.

Due to periodic changes in designs, methods, procedures, policies and regulations, the specifications contained in this sheet are subject to change without notice. While Lang exercises good faith efforts to provide information that is accurate, we are not responsible for errors or omissions in information provided or conclusions reached as a result of using the specifications. By using the information provided, the user assumes all risks in connection with such use.

MAINTENANCE AND REPAIRS

Contact your local dealer for service or required maintenance. Please record the model number, serial number, voltage and purchase & Installation Information in the area below and have it ready when you call to ensure a faster service.

Model No.: _____ Purchased From: _____

Serial No.: _____ Location: _____

Voltage: _____ Purchase Date: _____

1-Phase or 3 Phase: _____ Installed Date: _____

2M-W1091, Commerical & Marine Electric Range Top

PROBLEMS, QUESTIONS or CONCERNS

Before you proceed consult you authorized Lang service agent directory
or
Call the Lang Technical Service & Parts Department at 314-678-6315.

TABLE OF CONTENTS

Equipment Description 4

Unpacking 5

Installation
- Leg Installation 5
- Electrical Connection 5

Initial Start-Up
- Hot Plates 7
- French Plates 7
- Induction Hot Plates 8
- Griddle. 8
- Range Top 8

Maintenance
- Cleaning 9
- Induction Hot Plate Surface Care 9
- Griddle Surface Care (non-chromium surface) 9
- Calibration 10
- Troubleshooting 10
- Induction Troubleshooting 11
- Induction Error Codes 11

Wiring Diagram
- Griddle, Hot Plate, French Plate. 12
- Induction. 13

Exploded View & Parts List 16-19

Sea Rail Parts List 20-21

2M-W1091, Commerical & Marine Electric Range Top

NOTICE Service on this or any other Lang appliance must be performed by qualified personnel only. Consult your Lang Authorized Service Agent Directory. You can call us at 314-678-6315 or visit our website www.langworld.com for the service agent nearest you.

EQUIPMENT DESCRIPTION

Exterior

The range top dimensions are 8” (20.3 cm) high, 38” (96.5cm) deep, and 36” (91.5cm) wide.

The sides, bottom, and rear wall are constructed of stainless steel.

The range surface can come in 5 different configurations (shown below).

Controls

The RT36 Series Range is available with various controls depending upon model number. Shown below are layouts of each top configuration with its proper model number and a brief description of the controls.

The RT36 provides three (3) options for the bottom of the range. A standard bake oven, convection oven, or just as a range top.

Range Surface Configurations

Model	Conf.	Controls	Griddle 450°F	Hot Tops 850°F	French Plates	Wave Induction
RT36-ATA	A	4	24”		2	
RT36-ATB	B	3		36”		
RT36-ATC	C	4		24”	2	
RT36-ATD	D	3	36”			
RT36-ATE	E	6			6	
RTI36-ATE	E	6				6
RT36-ATF	F	5		12”	4	
RT36-ATG	G	5	12”		4	
RT36-ATJ	F	5		12”	4	

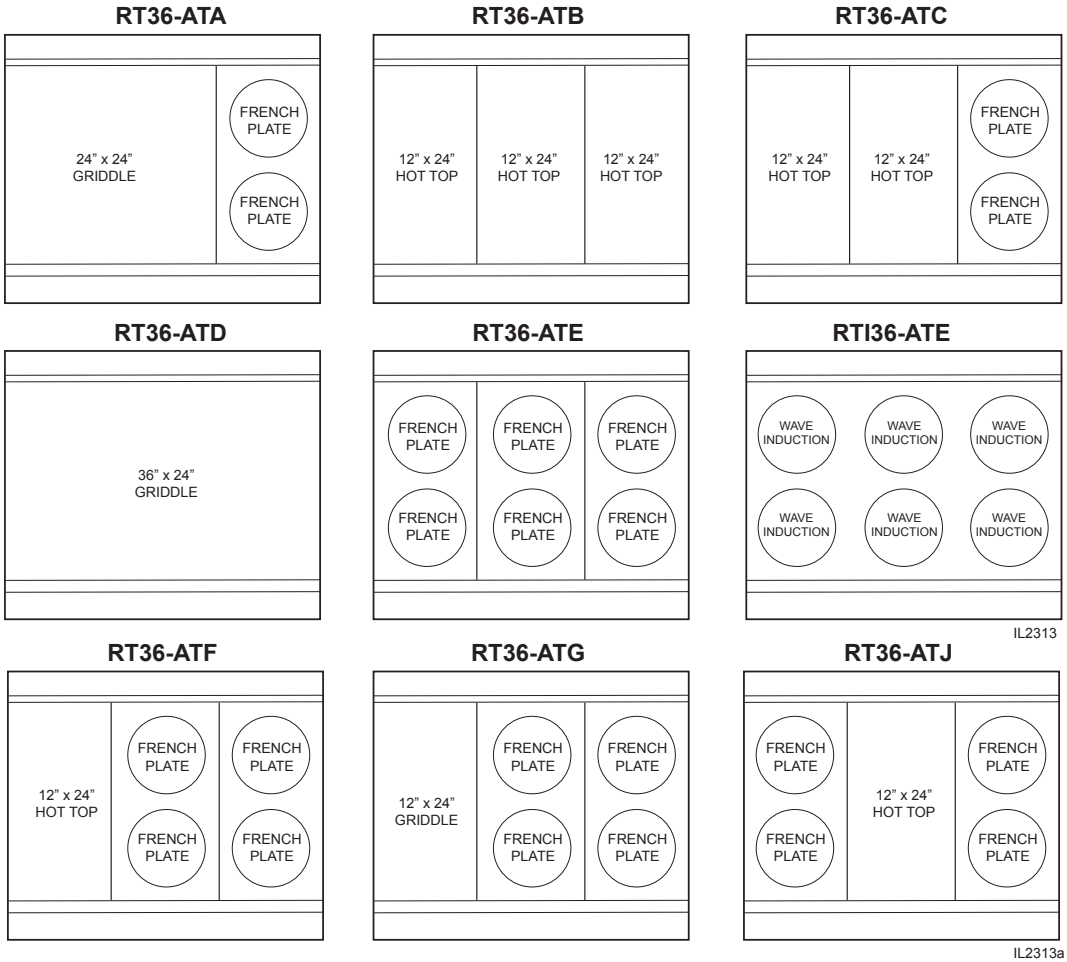

UNPACKING

Receiving the Range

Upon receipt, check for freight damage, both visible and concealed. Note visible damage on the freight bill at the time of delivery and require the carrier's agent to sign the freight bill. Concealed loss or damage means loss or damage, which does not become apparent until the merchandise has been unpacked. If concealed loss or damage is discovered upon unpacking, make a written request for inspection by the carrier's agent within 15 days of delivery. Keep all packing material for inspection. Do not return damaged merchandise to Lang Manufacturing, file your claim with the carrier.

Location

Prior to un-crating, move the range as near its intended location as practical. The crating will help protect the unit from the physical damage normally associated with moving it through hallways and doorways.

Un-crating

The range will arrive completely assembled inside a wood frame covered by cardboard box and strapped to a skid. Remove the cardboard cover, cut the straps and remove the wood frame.

RANGE WEIGHS 410 LBS (186 kilograms). FOR SAFE HANDLING, INSTALLER SHOULD OBTAIN HELP AS NEEDED, OR EMPLOY APPROPRIATE MATERIALS HANDLING EQUIPMENT (SUCH AS A FORKLIFT, DOLLY, OR PALLET JACK) TO REMOVE THE UNIT FROM THE SKID AND MOVE IT TO THE PLACE OF INSTALLATION.

CAUTION

ANY STAND, COUNTER OR OTHER DEVICE ON WHICH RANGE WILL BE LOCATED MUST BE DESIGNED TO SUPPORT THE WEIGHT OF THE OVEN (410 LBS.).

SHIPPING STRAPS ARE UNDER TENSION AND CAN SNAP BACK WHEN CUT.

Remove range from skid and place in intended location.

INSTALLING THE LEGS

Legs or Casters are available and must be specified upon ordering.

To install the 6-inch legs, remove the legs from the range packing, place some cardboard on the floor and gently tip the range onto its back. Fasten the legs into the threaded holes provided and then gently flip the oven onto its legs.

To install the 6-inch casters, remove the casters from the oven cavity, place some cardboard on the floor and gently tip the range onto its back. Attach the casters to the adapter plates. Install the four adapter plates (one in each corner with the flange pointed toward the oven). Gently tip the oven onto its casters.

INSTALLATION

Electrical Connection

Make all electrical connections in accordance with local codes or in the absence of local codes with NFPA No. 70 latest edition (in Canada use: CSA STD. C22.1).

Place spacers, (i.e. 2x4 wood block not supplied) at the front and rear of the oven top.

Place the range top on the spacers that are located on top of the oven.

The six wire leads that supply electricity to the cook top are bundled under the front of the top. Route the six wires through the bushing provided in the oven top.

Align the four locating pins in the bottom corner of the top with the four holes in each corner of the oven top.

Remove the spacers and lower the top onto the oven.

The range can now be connected to power.

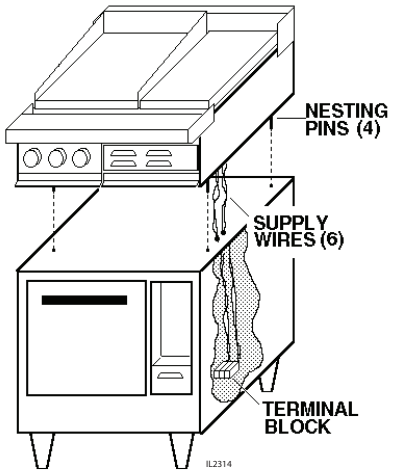

Use the wiring diagram provided in this manual for determining the connections of the cook top wires to the oven terminal block.

CAUTION — **MAKE SURE THE SIX WIRE LEADS TO SUPPLY ELECTRICITY TO THE RANGE TOP ARE NOT CRIMPED BETWEEN THE OVEN AND RANGE TOP. FAILURE TO COMPLY WILL RESULT IN DAMAGE TO EQUIPMENT.**

WARNING — **TURN OFF THE MAIN POWER SUPPLY TO THE RANGE AT THE SOURCE PRIOR TO CONNECTING POWER TO THE RANGE. FAILURE TO COMPLY MAY RESULT IN SERIOUS INJURY AND OR DEATH.**

WARNING — **THIS APPLIANCE MUST BE GROUNDED AT THE TERMINAL PROVIDED. FAILURE TO GROUND THE APPLIANCE COULD RESULT IN ELECTROCUTION AND DEATH.**

WARNING — **INSTALLATION OF THE UNIT MUST BE DONE BY PERSONNEL QUALIFIED TO WORK WITH ELECTRICITY AND PLUMBING. IMPROPER INSTALLATION CAN CAUSE INJURY TO PERSONNEL AND/OR DAMAGE TO EQUIPMENT. UNIT MUST BE INSTALLED IN ACCORDANCE WITH ALL APPLICABLE CODES.**

NOTICE — **The data plate is located right of range top controls. The oven voltage, wattage, serial number, wire size, and clearance specifications are on the data plate. This information should be carefully read and understood before proceeding with the installation.**

NOTICE — **The installation of any components such as a vent hood, grease extractors, fire extinguisher systems, must conform to their applicable National, State and locally recognized installation standards.**

CAUTION — **BE SURE THE POWER SUPPLY VOLTAGE MATCHES THE VOLTAGE SPECIFIED ON THE NAMEPLATE LOCATED ON THE FRONT OF THE RANGE. FAILURE TO COMPLY MAY RESULT IN PERSONAL INJURY AND/OR DAMAGE TO EQUIPMENT**

INSTALLATION continued

Electrical Connection

The following table and illustrations provide the voltage and kilowatts necessary to operate the range and oven

Electrical Specifications

Range style	Total k.W.	Three Phase									Single Phase	
		208 Volt			240 Volt			480 Volt			208 V	240 V
		L1	L2	L3	L1	L2	L3	L1	L2	L3	L1	L2
Range Top Only	**15**	41.7	41.7	41.7	36.1	36.1	36.1	18.1	18.1	18.1	72.1	62.5
W / Conv. Oven	**21.6**	48.3	69.2	62.5	41.9	59.9	54.1	20.5	29.5	27.1	103.8	90
W / Bake Oven	**21**	45.8	66.7	62.5	39.7	57.8	54.1	19.9	28.9	27.1	101	87.5

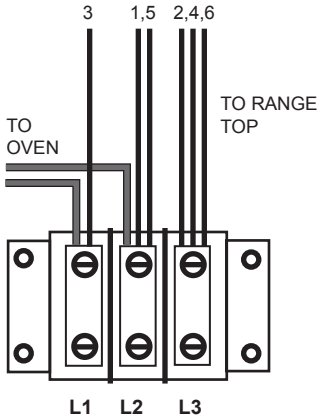

Three Phase with Oven

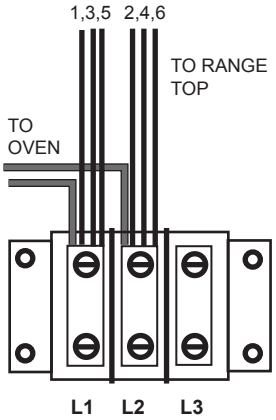

Single Phase with Oven

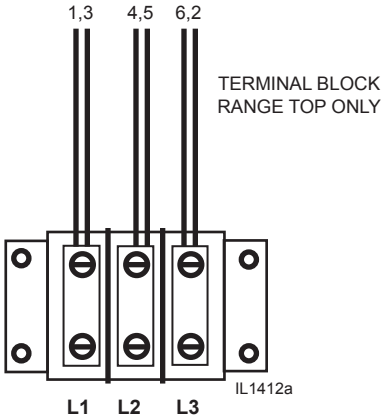

Three Phase w/o Oven

INITIAL START-UP

Hot Plates

To “dry out” the hot plate, set the thermostat dial at 250°F and turn on the power switch. Allow unit to cycle at least 15 minutes at this heat level. Reset the thermostat to 350°F allowing the same time. Then reset the thermostat to 450°F allowing the same time. Continue doing this until you reach 850°F then allow the unit to maintain this temperature for a minimum of 4 hours. More time may be required if the unit has to operate in a moist environment.

If the unit is out of use for three or more days, a one-hour preheat schedule should be used, especially when exposed to high humidity and/or cool temperatures.

French Plates

To “dry out” the Frenchplate, set the six-heat switch to the first setting and turn on the power switch. Allow unit to cycle at least 15 minutes at this heat level. Reset the six-heat switch to position 2 and allow the same time. Reset the six-heat switch to position 3 and allow the same time. Continue doing this until you reach position 6 then allow the unit to maintain the temperature for a minimum of 4 hours. More time may be required if the unit has to operate in a moist environment.

If the unit is out of use for three or more days, a one-hour preheat schedule should be used, especially when exposed to high humidity and/or cool temperatures.

Induction Burners

Induction requires cookware that is induction efficient or that is made for use on an induction surface. Generally speaking if a magnet attracts and strongly adherse to the pan bottom it will generally work on an induction surface. This is a requirment for proper use. **DO NOT USE WITH EMPTY PANS.**

To operate unit turn the knob clockwise and a small digital number will appear next to the hotplate to be cooked on. The higher the number the faster the heat up. Heating will begin when the pan surface comes in contact with the induction surface and will cease when the pan is removed. **Note: surface will remain hot for a certain period of time after the pan is removed.**

Induction module, controlled by variable heat control. Great for rapid heat-up, it will generally boil water, heat sauces or soups in about half the time of a French Plate. Use caution placing items on the glass cook surface, always wipe down glass with mild soap and water to keep the unit clean.

Griddles

To “dry out” the griddle, set the thermostat to 250°F and turn on the power switch. Allow the unit to cycle at least 15 minutes at this heat level. Reset the thermostat to 350°F allow the same time. Reset the thermostat to 450°F and allow the unit to maintain the temperature for a minimum of 4 hours. More time may be required if the unit has to operate in a moist environment.

If the unit is out of use for three or more days, a one-hour preheat schedule should be used, especially when exposed to high humidity and/or cool temperatures.

NOTICE

During the first few hours of operation you may notice a small amount of smoke coming off the range, and a faint odor from the smoke. This is normal for a new range and will disappear after the first few hours of use.

ALWAYS KEEP THE AREA NEAR THE APPLIANCE FREE FROM COMBUSTIBLE MATERIALS.

CAUTION

KEEP FLOOR IN FRONT OF EQUIPMENT CLEAN AND DRY. IF SPILLS OCCUR, CLEAN IMMEDIATELY, TO AVOID THE DANGER OF SLIPS OR FALLS.

RANGE TOP

Consists of the various top arrangements, depending on specific model purchased:

12” x 24” hot plate controlled by high temperature thermostats. Temperature ranges from 0°F-850°F. Recommended: Stock pots and heavy kettle work.

Round French Plates, controlled by indicating type 6-heat switch. Temperature ranges from 0°F-750°F. Recommended: Light duty sauce pans and small stockpots. Not Recommended: Heavy stock pots, or heavy urns, or kettles.

36” x 24” or 24” x 24” grill plates, controlled by thermostats. Temperature ranges from 0°F-450°F. Recommended: All heavy and light frying. Set the thermostat dial at the desired temperature. The red pilot light will be on until the desired temperature is reached. The pilot light indicates that the plate is heating.

MAINTENANCE AND CLEANING

Cleaning

The range should be thoroughly cleaned at least once a week in addition to the normal daily cleaning to insure against the accumulation of foreign material.

CAUTION

Any oven cleaner used should be marked "Safe On Aluminum".

Electric equipment is inherently clean and sanitary, but may become unsanitary if dirt is allowed to accumulate on it. Take advantage of the clean, sanitary features of electric equipment, give it the regular attention that it deserves the same as any other highly perfected machinery, to insure best results and continued high operating efficiency.

- Always start with a cold griddle, french plate, hot plate or induction surface.
- The stainless exterior can easily be cleaned using a good non-abrasive cleaner.
- Always follow the cleaner manufacturer's instructions when using any cleaner.
- Always apply these cleaners when the griddle is cold and rub in the direction of the metal's grain.
- Keep-drip pans under the range top plates clean.
- Keep the hotplate and griddle surfaces clean.
- Outside of the range and top should be kept clean.

Induction Hot Plate Surface Care

Use only cook-top cleaning creme on glass-ceramic cooking surfaces. Wipe the ceramic cooking surfaces with cleaning creme and a clean cloth. The cleaning creme leaves a protective coating.

CAUTION

DO NOT USE ABRASIVE CLEANERS ON THE INDUCTION GLASS COOKTOP SURFACE, AS THIS COULD SCRATCH AND DAMAGE THE GLASS SURFACE. USE ONLY WATER WITH A MILD DISHWASHING SOAP.

Griddle Surface Care (non-chromium surfaces)

It takes very little time and effort to keep the griddle attractive and performing at top efficiency. If grease is permitted to accumulate, it will form a gummy cake and then carbonize into a hard substance which is extremely difficult to remove. To prevent this condition, the following suggestions for cleanliness should be followed:

- After each use, scrape the griddle with a scraper or flexible spatula to remove excess grease and food. A waste drawer is provided for the scrapings. If there is an accumulation of burned on grease and food, the griddle should be thoroughly scoured and re-seasoned. Use pumice or griddle stone while the griddle is warm.

Do not use steel wool because of the danger of steel slivers getting into the food. MAINTENANCE AND CLEANING

Calibration

Calibration Check

- Place thermometer in the center of oven cavity.
- Set thermostat to 350°F and place both 3-heat switches in the “HIGH” position.
- Allow the oven to Preheat for at least half an hour.

NOTE **Cycle on temperatures and cycle off temperatures for 3 cycles. (Red indicator light indicates when oven is calling for heat)**

After 3 cycles average the temperature. (Add all six temperatures and divide by 6)

Calibration Adjustment

- A 1/16” flat blade screwdriver with a 2” shaft is required to make adjustments to the thermostat.
- Maintain the oven temperature at 350°F.
- Without turning the thermostat, remove the knob.
- Locate the adjustment screw at the base of the shaft and insert the screwdriver.
- Hold the shaft and turn the screwdriver counter clockwise to increase the temperature and clockwise to decrease the temperature. (1/8 of a turn will move the temperature 5-7 °F in either direction).
- Reinstall the oven knob and recheck the oven temperature.

Troubleshooting

Troubleshooting is not an exact science. Several factors may play a part in why your machine is not operating correctly. The following symptoms are a general idea of what may be causing the malfunction and should not be considered the complete answer to the situation that you have with your machine. Here are some of the possible problems you may encounter and possible solutions to those problems

Symptom	Possible Cause
Hotplate will not heat	No power to Unit
	Defective Thermostat
	Defective element
French plate will not heat	No power to Unit
	Failed 6-heat switch
	Failed element
Griddle plate will not heat	No power to Unit
	Failed Thermostat
	Failed element

Possible Cause	Test
Failed thermostat	Verify calibration
Failed element	Remove the wires and check for continuity across the element*
Failed 6-heat switch	Call factory or consult service manual for proper tests

If an item on the list is followed by an asterisk (*), the work should be done by a factory authorized service representative

NOTICE **Service on this or any other Lang appliance must be performed by qualified personnel only. Consult your Lang Authorized Service Agent Directory. You can call us at 314-678-6315 or visit our website www.langworld.com for the service agent nearest you.**

WARNING **WARNING: BOTH HIGH AND LOW VOLTAGES ARE PRESENT INSIDE THIS APPLIANCE WHEN THE UNIT IS PLUGGED/WIRED INTO A LIVE RECEPTACLE. BEFORE REPLACING ANY PARTS, DISCONNECT THE UNIT FROM THE ELECTRIC POWER SUPPLY.**

Induction Troubleshooting

INDUCTION TROUBLESHOOTING		
Symptom	**Probable Cause**	**Possible Solution**
No Power (no lights or fan noise)	Power the unit, disconnecteed or circuit breaker open.	Turn on main power switch, check circuit breaker.
Pan does not heat	Pan is not induction efficient	Use induction efficient pan
	Pan not centered	center pan
Unit suddenly stops heating	Possible power brown out	Verify proper voltage/power
	Safety shut-off engaged	The safety shut off will engage if an empty pan is left on the cooktop surface while the unit is working at full power. Make sure the cooktop surface is clear. Wait 15-20 minutes for the unit to reset.
Pan heats unevenly or over heats	Pan not unduction efficient	Use induction efficient pan
	Pan bottom may not be flat	Use flat pan
	Pan not centered	Center pan
	Pan is less than 7” dia	Use larger induction efficient pan.

In the event of a possible malfunction your Lang Wave module will display an error code on the display. See below when encountering an error code on your display. To reset error conditions remove the pan from the unit and turn off power to the unit.

INDUCTION ERROR CODES			
Error	Cause	Code	Troubleshooting
1	Broken Temp Sensor	E-01	Service required to replace sensor
2	Glass Temp. to high	E-02	Remove pans from surface & let unit cool. Turn unit power OFF & then ON. If unit does not return to normal operation, service is required.
3	Over Current	E-03	Try different cookware, current may be required
4	Over heat or air flow restriction	Air-Flow	Make sure air inlet vents in the rear are not restricted, listen for unit fan operation
6	Hig Line Voltage	E-06	To reset, turn OFF unit power & turn on again. Verify power line voltage.
7	Hardware Failure	E-07	Service required
8	Zero Cross Failure	E-08	Turn OFF unit, then turn ON. If problem persists, service is required.

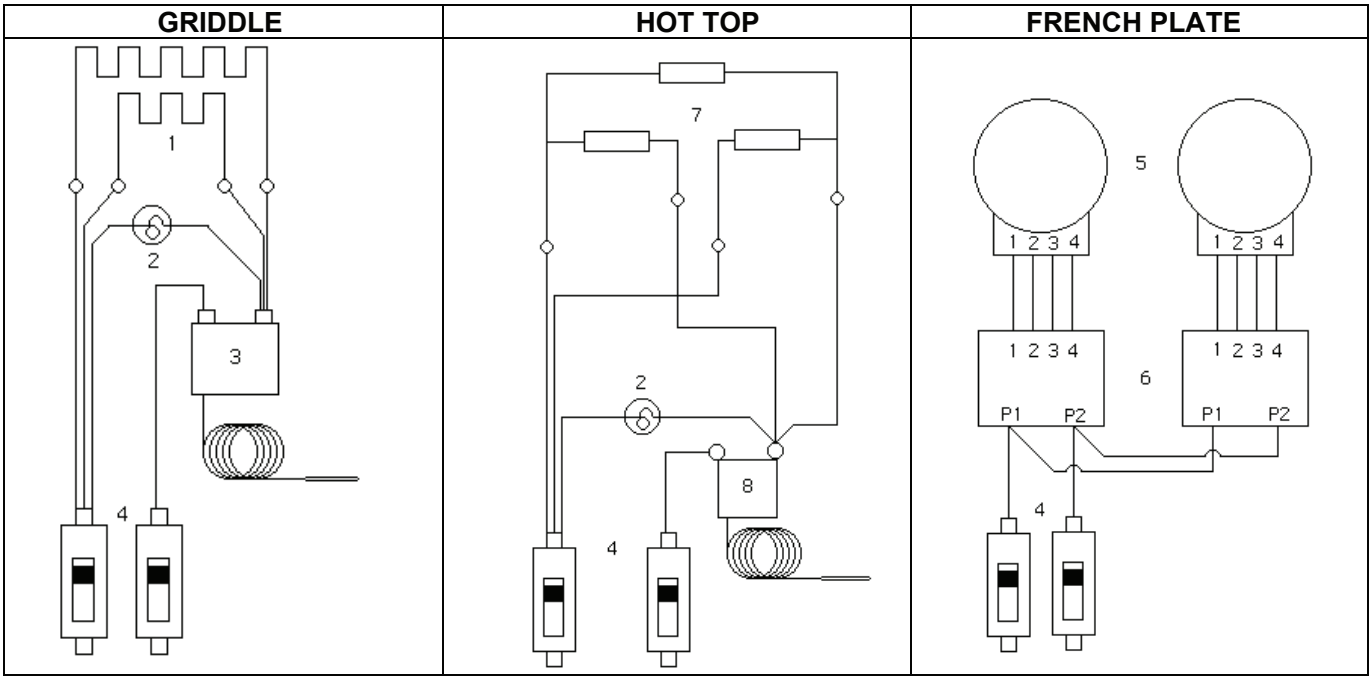

1. Griddle and Top Plate Element
2. Pilot Light
3. 450°F Griddle Theremostat
4. Circuit Breaker
5. French Plate
6. 6-Heat Switch
7. Hot Top
8. 850°F Hot Top Thermostat

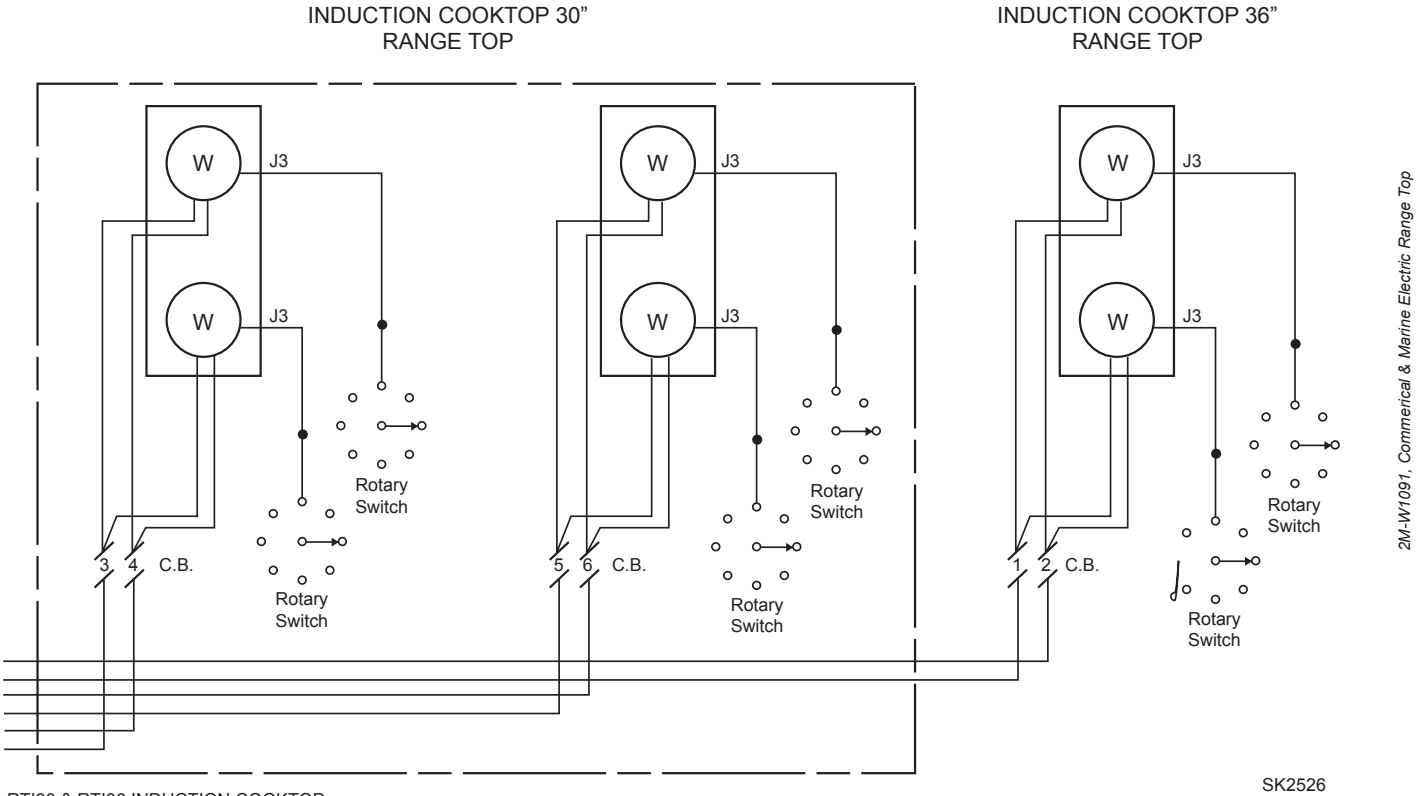

RTI30 & RTI36 INDUCTION COOKTOP

MODEL DESIGNATION	TOP ARRANGEMENT		
	SEC-1	SEC-2	SEC-3
36S-11	A	A	A
36S-21	C	C	C
36S-5	A	A	C
36S-7	B	B	B
36S-8A	B	B	C

1. THERMOSTAT
2. SIX HEAT SWITCH
3. PILOT LAMP
4. SPEED UNIT-(EGO)
5. HEAT ELEMENT
6. CAST HOT TOP

1 N 2 N 3 N

TOP SECTION WIRE DIAGRAMS

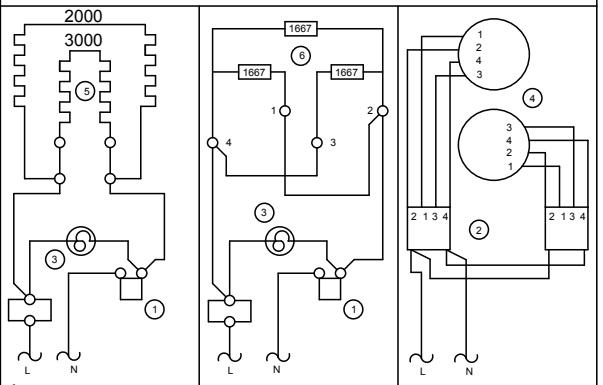

A	GRILL	B	HOT TOP	C	SPEED UNITS (INDUCTION)

ELECTRICAL CONNECTIONS			ELECTRICAL DATA							
POWER SUPPLY	CIRCUIT BREAKER	COOK TOP	MODEL	LOADING KW PER PHASE			KW TOTAL	AMPS 220 V. (L-N)		
				L1 L2	L2 L3	L3 L1		L1	L2	L3
SINGLE	L1	1								
	L2	2	36S COOK TOP	5.0	5.0	5.0	15.0	22	22	22
PHASE	L3	3								

USED ON A 5 WIRE SUPPLY SYSTEM WITH 380V.
3 PH. SUPPLY WITH A NEUTRAL AND GROUND WIRE.

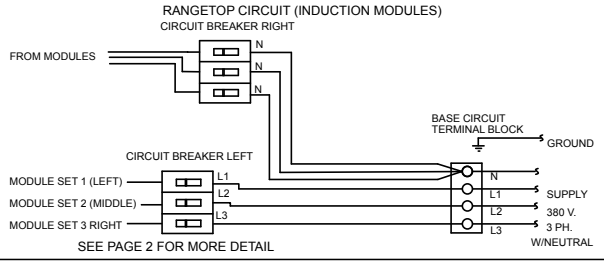

SEE PAGE 2 FOR MORE DETAIL

QTY	ITEM	PART NUMBER	DESCRIPTION / MATERIAL

LANG MANUFACTURING

DR: SRC DATE: 5-2-13
CK: - DATE: -

TOLERANCES
FRACTIONS ± 1/64 — DECIMALS .X ± .05
ANGLES ± .5° — .XX ± .03
.XXX ± .015
UNLESS OTHERWISE SPECIFIED DIMENSIONS ARE IN INCHES

SCALE: NONE

TITLE: 36S COOK TOP

220/380 VAC

NEXT HIGHER ASSY. | SHEET 1 OF 2 | DRAWING NUMBER 61106-14 | REV —

REVISION BLOCK

REV	ECN NO.	DESCRIPTION	DR:	MFG	ENG	DATE

USED ON A 5 WIRE SUPPLY SYSTEM WITH 380V.
3 PH. SUPPLY WITH A NEUTRAL AND GROUND WIRE.

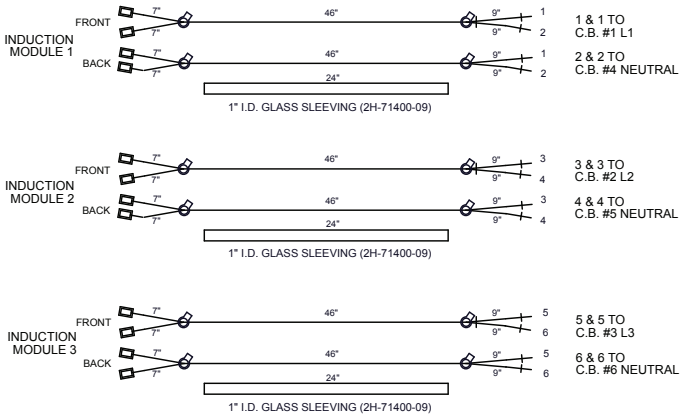

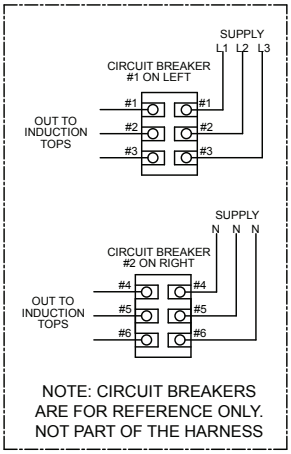

NOTE: CIRCUIT BREAKERS ARE FOR REFERENCE ONLY. NOT PART OF THE HARNESS

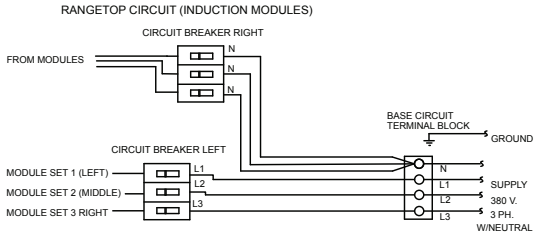

QTY	ITEM	PART NUMBER	DESCRIPTION / MATERIAL

LANG MANUFACTURING

DR: SRC DATE: 5-2-13
CK: - DATE: -

TOLERANCES
FRACTIONS ± 1/64 — DECIMALS .X ± .05
ANGLES ± .5° — .XX ± .03
.XXX ± .015
UNLESS OTHERWISE SPECIFIED DIMENSIONS ARE IN INCHES

SCALE: NONE

TITLE: 36S COOK TOP

220/380 VAC

NEXT HIGHER ASSY. | SHEET 2 OF 2 | DRAWING NUMBER 61106-14 | REV —

2M-W1091, Commerical & Marine Electric Range Top

REVISION BLOCK						
REV	ECN NO.	DESCRIPTION	DR:	MFG	ENG	DATE

1. HEAT ELEMENT
2. THERMOSTAT
3. 3 HEAT SWITCH
4. PILOT LAMP
5. CIRCUIT BREAKER
6. SPEED UNITS

MODEL DESIGNATION	TOP ARRANGEMENT		
	SEC-1	SEC-2	SEC-3
RT36A-T	A	A	C
RT36B-T	B	B	B
RT36C-T	B	B	C
RT36D-T	A	A	A
RT36E-T	C	C	C
RT36F-T	B	C	C

TOP SECTION WIRE DIAGRAMS

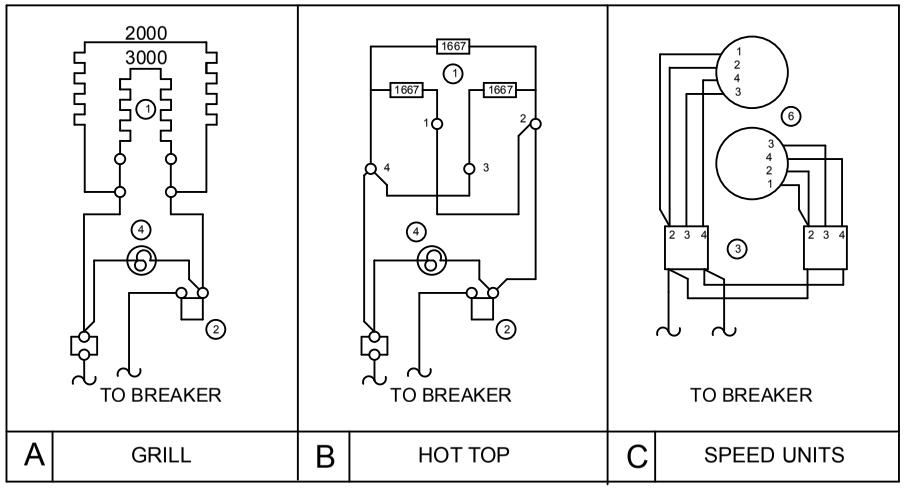

OVEN WIRING

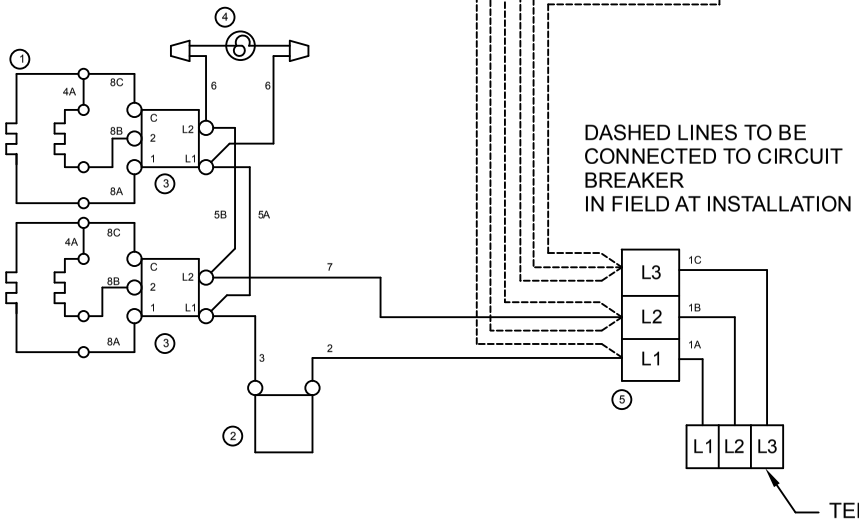

CONNECT WIRES FROM RANGE TOP TO OVEN CIRCUIT BREAKER AS SHOWN AT RIGHT

ELECTRICAL CONNECTIONS			
POWER SUPPLY		RANGE TOP CONNECT TO OVEN CIRCUIT BREAKER	OVEN TERMINAL BLOCK
THREE PHASE	L1	3	1
	L2	1-5	2
	L3	2-4-6	-

ELECTRICAL DATA							
MODEL NUMBER	LOADING KW PER PHASE			KW TOTAL	AMPS 380 VOLT		
	L1 L2	L2 L3	L3 L1		L1	L2	L3
RT36-T + DO36-T	6.0	10.0	5.0	21.0	25.1	36.5	34.2

QTY	ITEM	PART NUMBER	DESCRIPTION / MATERIAL

LANG MANUFACTURING

DR: NJM DATE: 5-4-15
CK: DATE:
TOLERANCES
FRACTIONS ± 1/64 DECIMALS .X ± .05
ANGLES ± .5° .XX ± .03 .XXX ± .015
UNLESS OTHERWISE SPECIFIED DIMENSIONS ARE IN INCHES
SCALE: NONE

TITLE: W/D LANG RANGE W/ DECK OVEN 380 VAC

NEXT HIGHER ASSY. | SHEET 1 OF 1 | DRAWING NUMBER 2M-61106-15 | REV -

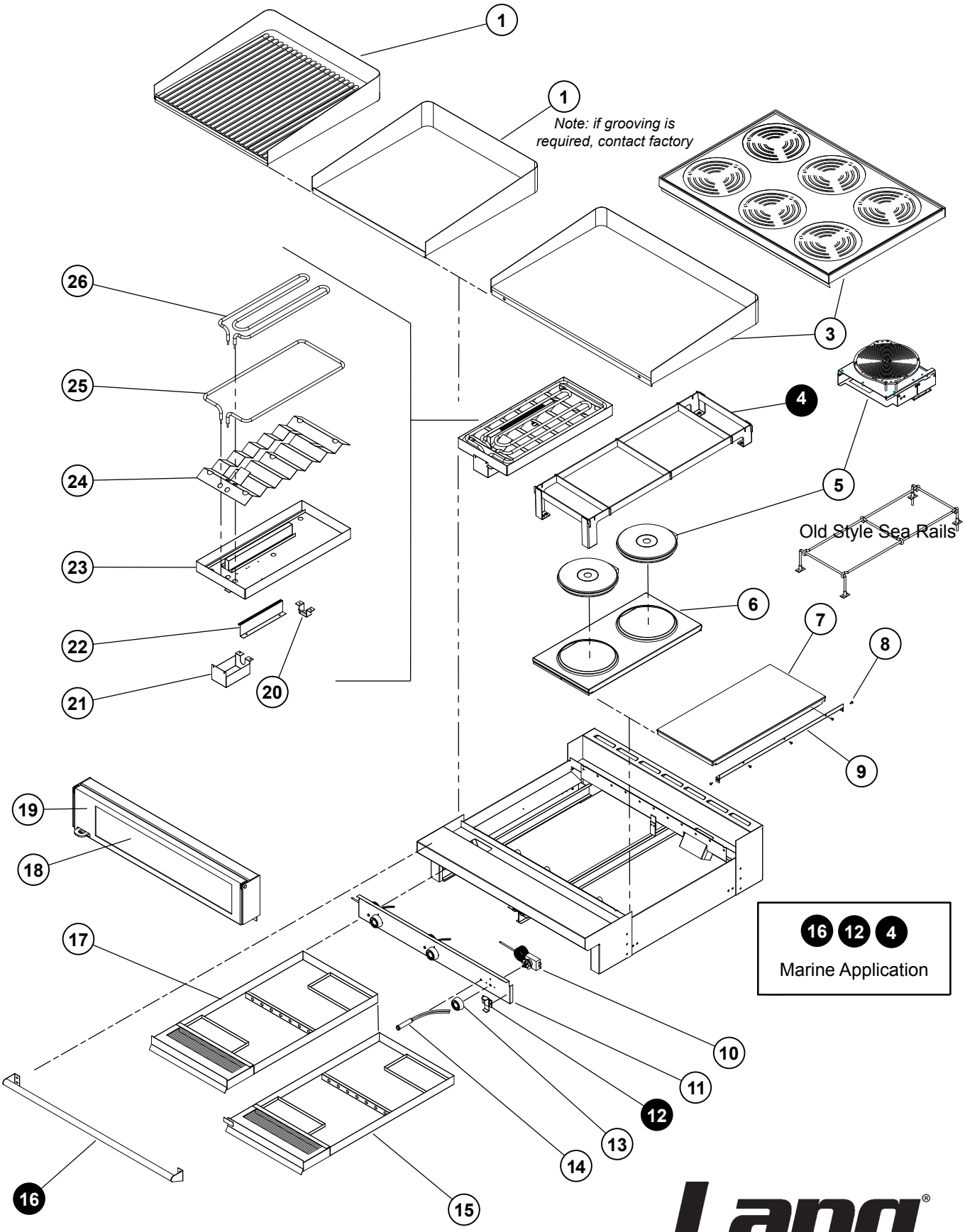

SOME ITEMS ARE INCLUDED FOR ILLUSTRATIVE PURPOSES ONLY AND IN CERTAIN INSTANCES MAY NOT BE AVAILABLE

Model:
36" Range Top

SK2265 Rev. B 8/2/11

2M-W1091, Commerical & Marine Electric Range Top

Model No: RT36A, RT36B, RT36C, RT36D, RT36E, RT36F, RT36G COMMERCIAL & MARINE ELECTRIC RANGE TOP				
Fig No	Part No	Qty	Description	Application
1	P9-50401-09	1	RANGE PLATE ASSY 1” X 2’	ALL RT36A V
	P9-50401-02		RANGE PLATE ASSY 1/2” X 2’	ALL RT36A VM
3	P9-50401-03	1	RANGE PLATE ASSY 1/2” X 3’	ALL RT36D VM
	P9-50401-11		RANGE PLATE ASSY 1/2” X 3’	ALL RT36D V
	P9-50403-10		RANGE PLATE ASSY 1” X 3’	RT36D1
	P9-RF21-740	1	TOP GLASS ASY - 36” INDUCTION	RTI36
	PS-71300-22	AR	GLASS ONLY - 36” INDUCTION	
4	P9-50302-301	1	SEARAIL ASSY 3’ {RF&500}	ALL RT36E-VM, RT36F-VM
	P9-50302-303-1		SEARAIL ASSY 1’ {ADD} SK	ALL RT36A, RT36C VM
5	2N-11120-12	2	ELMNT TK 208V 2600W	RT36A-208V/VM, RT36C-208V, RT36A1-208V, RT36G-208V/VM
		4		RT36F-208V/VM, RT36J-208V
		6		RT36E-208V/VM
	2N-11120-13	2	ELMNT TK 240V 2600W	RT36A-240V/VM, RT36C-240V/VM
		4		RT36F-240V/VM, RT36G-240V/VM
		6		RT36E-240V/VM
	2N-11120-14	2	ELMNT TK 480V 2600W	RT36A-440VM, 480V/VM, RT36C-440VM, 480V/VM
		4		RT36F-480VM, RT36G-480V/VM
		6		RT36E-440VM, 480V/VM
	2N-11120-18		ELMNT TK 380V 2000W	RT36A-380VM, RT36E-380V
	2N-11120-26	6	INDUCTION MOD-2600W 208/240	RTI36E
6	P9-50300-82-1	1	EGO PLATE FRM ASY PHANT	RT36A-208V/VM, 240V, ALL RT36C
		3		ALL RT36E
	P9-50300-83	2	EGO FRENCH HOT PLATE	RT36F-480VM
7	PS-11010-341	1	HOTPLATE 208V 5000W CAST	RT36F-208V/VM, RT36J-208V, RT36G-208V/VM
		2		RT36C-208V
		3		RT36B-208V/VM
	PS-11010-351	1	HOTPLATE 240V 5000W CAST	RT36F-240V/VM, RT36G-240V/VM
		3		RT36B-240V, RT36C-240V/VM, RT36F-240VM
	PS-11010-361	1	HOTPLATE 480V 5000W CAST	RT36F-440VM & 480VM, RT36G480V/VM
		3		RT36B-440VM, 480V/VM, RT36C-440VM, 480V/VM
	PS-11010-371	2	HOTPLATE 400V 5000W CAST	RT36C-380VM
8	2C-21003-02	10	SCRW SECRTY 1/4-20 2-EAR	RT36B-480VCP
9	P9-RF21-820	2	HOT TOP HLDER ASY CORR. PKG	RT36B-480VCP
10	2E-30304-09	2	SWTROT 6 HEAT+OFF208/240V	RT36A-208V/VM, 240V, 440VM, 480V/VM, RT36B-440VM, ALL RT36C
		4		ALL RT36G
		6		ALL RT36E
	2T-30402-08	1	STAT ADJ 450o 72 C/T	ALL RT36G
		2		ALL RT36A
		3		ALL RT36D
	2T-30402-23	3	STAT ADJ 850° 48C/T NAK	ALL RT36B
		2		ALL RT36C
		1		ALL RT36F, RT36J
	2E-30304-14	6	CONTROL MODULE-INDUCTION	RTI36E
11	P9-RF21-304	1	CONTROL PANEL H	ALL RT36E
	P9-RF21-305		CONTROL PANEL C&G	ALL RT36B, RT36D
	P9-RF21-306		CONTROL PANEL A&D	ALL RT36A AND RT36C
	P9-RF21-307-2		CONTROL PANEL CUSTOM	ALL RT36F, RT36G

Model No: RT36A, RT36B, RT36C, RT36D, RT36E, RT36F, RT36G COMMERCIAL & MARINE ELECTRIC RANGE TOP				
Fig No	Part No	Qty	Description	Application
12	P9-60102-93	1	MARINE PAN LATCH ASSY	ALL RT36A VM, ALL RT36B VM & VCP, ALL RT36C VM, RT36D-208VM & 240VM & 440VM, ALL RT36E VM
13	P9-70701-35 (Black), P9-70701-35-2 (Red)	1	KNOB ASSY 850° B	ALL RT36F, RT36J
	P9-70701-41 (Black), P9-70701-41-2 (Red)	3	KNOB ASSY 6 HEAT EGOTK	ALL RT36B AND RT36D
		4		ALL RT36A AND RT36C, RT36F
		6		ALL RT36E
	Y9-70701-16 (Black), Y9-70701-16-2 (Red)	2	KNOB ASSY 450o A	ALL RT36A; RT36C-440 VM,480 V/VM
		3		ALL RT36D; ALL RT36B; RT36C-208 V/VM, 240 V/VM
	PS-70700-09-1	6	KNOB ASSY-INDUCTION	RTI36E
14	Y9-31601-01-1	1	PILOT LT 250V 6LEAD BLK	RT36F-208V/VM, RT36F-240V/VM, RT36F-208V
		2		RT36A-208V/VM, 240V/VM, RT36C-208V/VM, 240V/VM
		3		RT36B-208V/VM, 240V/VM, RT36D-208V/VM, 240V/VM
	Y9-31601-02-1	2	PILOT LT 480V 6LEAD BLK	RT36A-380VM, 440VM, 480V/VM, RT36C-380VM, 440VM, 480V/VM
		3		RT36B-440VM, 480V/VM, RT30D-440VM & 480V, RT36D 480 SUB
15	P9-RF21-415-1	2	PAN ASSY (304 S/S)	ALL RT36A V, ALL RT36B V, ALL RT36C V, RT36D-208V & 240V, ALL RT36E V
	PS-60102-W1232	1	RF21 MARINE PAN ASY-RIGHT	ALL RT36A VM, ALL RT36B VM, ALL RT36C VM, RT36D-208VM & 240VM & 440VM, ALL RT36E VM
	P9-RF21-750	2	PAN WELD ASSY-INDUCTION	RTI36E
16	P9-50300-44-1	1	GRAB BAR ASSY 36 RANGE	ALL RT36A VM, ALL RT36B VM, ALL RT36C VM, ALL RT36D VM, ALL RT36E VM
17	M9-60102-290	1	MARINE PAN ASSY - A/L	ALL RT36A VM, ALL RT36B VM, ALL RT36C VM, ALL RT36D VM,ALL RT36E
18	P9-RF21-803	1	WINDOW - CP RF21	RT36B-480VCP
19	P9-RF21-800	1	DOOR ASSY - CP	RT36B-480VCP
20	P9-50306-25	2	WIRE BRACKET ASSY TILT-UP	ALL RT36A
		3		ALL RT36D
		1		ALL RT36G
21	P9-50306-33	3	ELEM TERMINAL GUARD	ALL RT36D
		2		ALL RT36A
		1		ALL RT36G
22	P9-50300-22	2	208-240 V 3/16 BULB HOLDER	ALL RT36A 208, 240 V/VM
		3		ALL RT36D 208, 240 V/VM
	P9-50300-43	2	480 V 3/16 BULB HOLDER	ALL RT36A 440VM, 480 V/VM
		3		ALL RT36D 440VM, 480 V/VM
		1		ALL RT36D 440VM
23	P9-50300-41	2	ELEM PAN ASSY (W/SNOUT) 5KW	RT36A 208, 240 V/VM
		3		RT36D 208, 240 V/VM
	P9-50300-43	1	480 V 3/16 BULB HOLDER	ALL RT36G

Model No: RT36A, RT36B, RT36C, RT36D, RT36E, RT36F, RT36G COMMERCIAL & MARINE ELECTRIC RANGE TOP				
Fig No	Part No	Qty	Description	Application
24	P9-50300-42	2	ZIG ZAG ASSY (W/SNOUT) 5KW	ALL RT36A
		3		ALL RT36D
		1		ALL RT36G
25	2N-11010-09	2	ELMNT T/P 208V 2KW O/S	RT36A 208 V/VM, RT36A1-208V
		3		RT36D 208 V/VM
	2N-11010-21	2	ELMNT T/P 240V O/S 2KW	RT36A 240 V/VM
		3		RT36D 240 V/VM
	2N-11010-23	2	ELMNT T/P 480V O/S 2KW	RT36A 480 V/VM, 440 VM
		3		RT36D 480 V/VM, 440 VM ;480 SUB
		1		RT36G
	2N-11010-25	1	ELMNT T/P 380V O/S 2KW	RT36G-380VM
		2		RT36A-380VM
		3		RT36D-380VM
26	2N-11010-10	2	ELMNT T/P 208V 3KW I/S	RT36A 208 V/VM, RT36A1-208V
		3		RT36D 208 V/VM
	2N-11010-22	2	ELMNT T/P 240V I/S 3KW	RT36A 240 V/VM
		3		RT36D 240 V/VM
	2N-11010-24	2	ELMNT T/P 480V I/S 3KW	RT36A 480 V/VM, 440 VM
		3		RT36D 480 V/VM, 440 VM, 480 SUB
		1		RT36G
	2N-11010-26	1	ELMNT T/P 380V I/S 3KW	RT36G-380VM
		2		RT36A-380VM
		3		RT36D-380VM
NI	2E-30500-08	1	TRM BLOCK 2 POLE SMALL 95	RT36A-440VM, 480V/VM, RT36C-440VM, 480V/VM
NI	2E-30500-09	1	TRM BLOCK 3 POLE SMALL 95	RT36B-440VM, 480V/VM, RT36D-440VM, 480V/VM
NI	2E-31800-01	6	CB 250V50A 1 POLE CRLNGSW	RT36A-208V/VM, 240V/VM, RT36B-208V/VM, 240V/VM, RT36C-208V/VM, 240V/VM, RT36D-208V/VM, 240V/VM, RT36E-208V/VM, 240V/VM, RT36F, RT36J

Lang Manufacturing Searail Assembly

	Part No.	Qty	Description
	50302-297-1	**SEARAIL ASSY 1' {RF&500} SK**	
A	50302-305	1	SEARAIL LH SIDE {ADD,RF & 500}
B	50302-306	1	SEARAIL RH SIDE {ADD,RF & 500}
C	50302-317	5	SEARAIL SIDE TO SIDE 12"
	20109-04	8	SCREW THD MS SS 10-32X 3/8

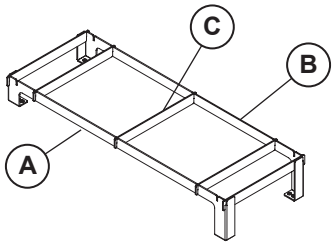

	Part No.	Qty	Description
	50302-303-1	**SEARAIL ASSY 1' {ADD} SK**	
A	50302-305	1	SEARAIL LH SIDE {ADD,RF & 500}
B	50302-306	1	SEARAIL RH SIDE {ADD,RF & 500}
C	50302-318	5	SEARAIL SIDE TO SIDE ADD
	20109-04	8	SCREW THD MS SS 10-32X 3/8

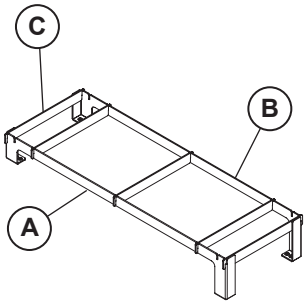

	Part No.	Qty	Description
	50302-298-1	**SEARAIL ASSY 2' {RF&500} SK**	
A	50302-305	1	SEARAIL LH SIDE {ADD,RF & 500}
B	50302-306	1	SEARAIL RH SIDE {ADD,RF & 500}
C	50302-317	6	SEARAIL SIDE TO SIDE 12"
D	50302-315	1	SEARAIL FR TO BK {ADD,RF,500}
E	50302-311	2	SEARAIL FR & RR 2'
	20109-04	10	SCREW THD MS SS 10-32X 3/8
	20301-34	2	NUT HEX ACORN 10-32 S/S

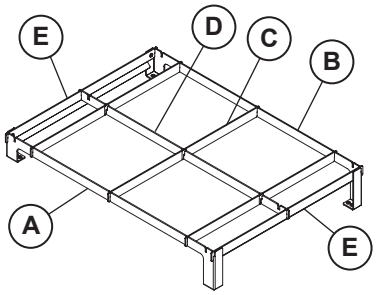

	Part No.	Qty	Description
	50302-301-1	**SEARAIL ASSY 3' (RF&500) SK**	
A	50302-305	1	SEARAIL LH SIDE {ADD,RF & 500}
B	50302-306	1	SEARAIL RH SIDE {ADD,RF & 500}
C	50302-317	9	SEARAIL SIDE TO SIDE 12"
D	50302-315	2	SEARAIL FR TO BK {ADD,RF,500}
E	50302-310	2	SEARAIL FR & RR 3'
	20109-04	10	SCREW THD MS SS 10-32X 3/8
	20301-34	2	NUT HEX ACORN 10-32 S/S

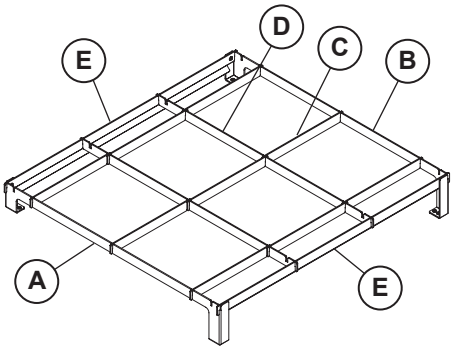

	Part No.	Qty	Description
	50302-299-1	**SEARAIL ASSY 4' {500} SK**	
A	50302-305	1	SEARAIL LH SIDE {ADD,RF & 500}
B	50302-306	1	SEARAIL RH SIDE {ADD,RF & 500}
C	50302-317	12	SEARAIL SIDE TO SIDE 12"
D	50302-315	3	SEARAIL FR TO BK {ADD,RF,500}
E	50302-312	2	SEARAIL FR & RR 4'
	20109-04	10	SCREW THD MS SS 10-32X 3/8
	20301-34	2	NUT HEX ACORN 10-32 S/S

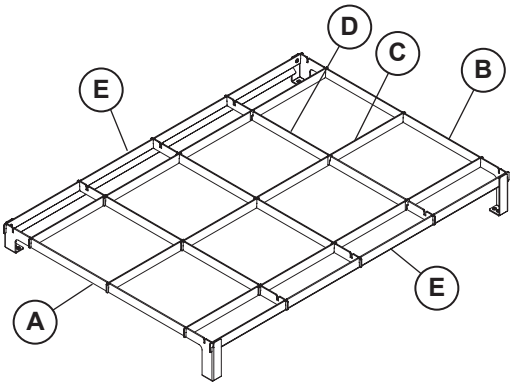

Lang Manufacturing Searail Assembly continued

	Part No.	Qty	Description
	50302-300-1	**SEARAIL ASSY 5' {500} SK**	
A	50302-305	1	SEARAIL LH SIDE {ADD,RF & 500}
B	50302-306	1	SEARAIL RH SIDE {ADD,RF & 500}
C	50302-317	15	SEARAIL SIDE TO SIDE 12"
D	50302-315	4	SEARAIL FR TO BK {ADD,RF,500}
E	50302-309	2	SEARAIL FR & RR 5'
	20109-04	10	SCREW THD MS SS 10-32X 3/8
	20301-34	2	NUT HEX ACORN 10-32 S/S

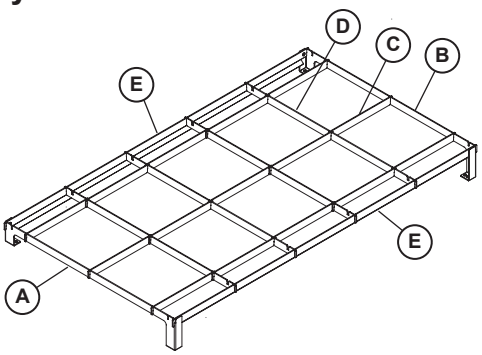

	Part No.	Qty	Description
	50302-304-1	**SEARAIL ASSY 1' RT30 SK**	
A	50302-307	1	SEARAIL LH SIDE RT30
B	50302-308	1	SEARAIL RH SIDE RT30
C	50302-317	5	SEARAIL SIDE TO SIDE 12"
	20109-04	6	SCREW THD MS SS 10-32X 3/8

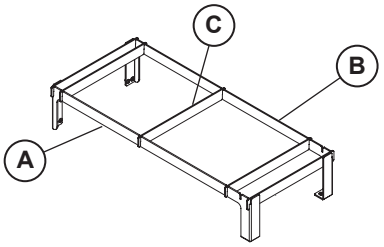

	Part No.	Qty	Description
	50302-302-1	**SEARAIL ASSY 2' RT30/32 SK**	
A	50302-307	1	SEARAIL LH SIDE RT30
B	50302-308	1	SEARAIL RH SIDE RT30
C	50302-317	6	SEARAIL SIDE TO SIDE 12"
D	50302-316	1	SEARAIL FR TO BK RT30
E	50302-311	2	SEARAIL FR & RR 2'
	20109-04	6	SCREW THD MS SS 10-32X 3/8
	20301-34	2	NUT HEX ACORN 10-32 S/S

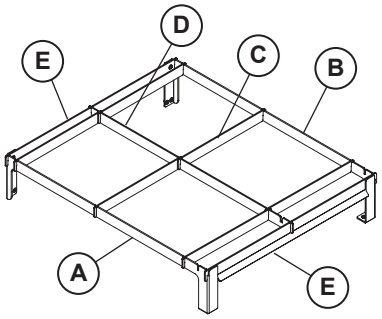

	Part No.	Qty	Description
	50302-295-1	**SEARAIL ASSY RT30 DBL W/GRD SK**	
A	50302-307	1	SEARAIL LH SIDE RT30
B	50302-308	1	SEARAIL RH SIDE RT30
C	50302-314	3	SEARAIL SUPPORT RT30 W/GRIDDLE
D	50302-316	2	SEARAIL FR TO BK RT30
E	50302-313	2	SEARAIL FR&RR RT30 W/GRIDDLE
	20109-04	8	SCREW THD MS SS 10-32X 3/8
	20301-34	2	NUT HEX ACORN 10-32 S/S

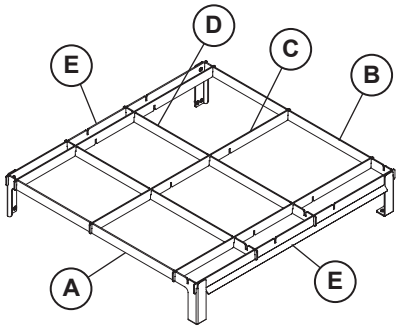

	Part No.	Qty	Description
	P9-50302-302-2	**1**	**SEARAIL ASSEMBLY - RTI30**
A	P9-50302-307-1	1	SEARAIL-LH SIDE-RTI30
B	P9-50302-308-1	1	SEARAIL-RH SIDE-RTI30
E	P9-50302-316-1	1	SEARAIL-FRT TO BCK-RI30
D	P9-50302-311-1	2	SEARAIL-FRONT-RTI30
C	P9-50302-317-2	4	SEARAIL-CROSS BRKT-RTI30
	2C-20109-04	8	SCRW THD MS SS 10-32X3/8
	2C-20301-34	2	NUT HEX ACORN 10-32 S/S

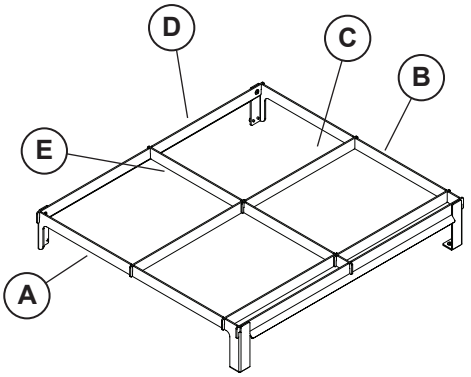

	Part Number	Description	Quantity
	P9-50302-297-2	**SEARAIL ASSEMBLY - RTI36**	**1**
A	P9-50302-306-1	SEARAIL - LH SIDE - 36”	1
B	P9-50302-305-1	SEARAIL - RH SIDE - 36”	1
C	P9-50302-317-3	SEARAIL-CROSS BRKT-36”	9
D	P9-50302-311-2	SEARAIL-FRT REAR-36”	1
E	P9-50302-316-2	SEARAIL-FRT TO BACK-36”	2
	2C-20109-04	SCRW THD MS SS 10-32X3/8	10
	2C-20301-34	NUT HEX ACORN 10-32 S/S	2

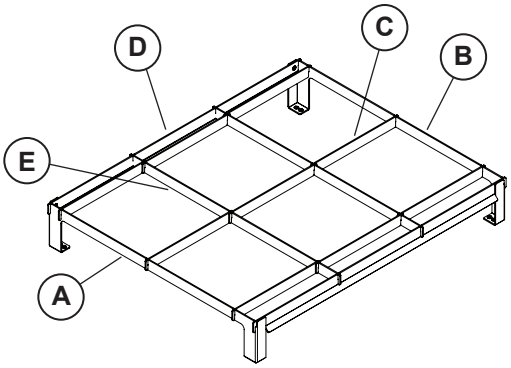

STAR INTERNATIONAL HOLDINGS INC. COMPANY
Star - Holman - Lang - Wells - Bloomfield - Toastmaster
10 Sunnen Drive, St. Louis, MO 63143 U.S.A.