FAQ for eufy Products

Robotic Vacuum Cleaner X10 Pro Omni

Contact us

Phone:

USA： +1-800-994-3056
Mon-Fri：6:00AM - 5:00PM (PT)
Sat-Sun: 7:00AM - 3:30PM (PT)

UK: +44 (0) 1604 936 200
Mon-Fri 9:00AM-5:00PM (GMT)

Email: support@eufy.com
(We will respond to you within 24 hours on workdays.)



Contents

1. Tips of troubleshooting for X10 Pro Omni Base Station (page 2-8)

2. Tips for the X10 Pro Omni to Build a Map Quickly (page 8-10)

3. Does the X10 Pro Omni Support Multiple Floors? Can the X10 Pro Omni Save Multiple Maps? (page 11-12)

4. What should I do if my X10 Pro Omni is not charging or powering on？ (page 12-14)

5. X10 Pro Omni Multi-Floor Mopping Feature Guidance - Without Using the Omni Station? (page 14-15)

6. What should I do if my X10 Pro Omni fails to return to its Omni Station? (page 15-17)

1. Tips of troubleshooting for X10 Pro Omni Base Station

(1) Cleaning tray water full or not in place/"Abnormal water level in the base station cleaning tray

If you encounter the "Abnormal water level in the base station cleaning tray" error, please try the following troubleshooting steps to resolve the issue:

- **Check the Dirty Water Tank**

Please verify the dirty water tank is securely fastened, and check the dirty water tank to ensure it is not filled to the maximum capacity. A full tank can impede the Omni Station's ability to drain the dirty water effectively. Additionally, if the dirty water tank's seal is not airtight, it may not be able to drain the dirty water efficiently.

Please refer to the following images that show examples of a water tank that has been securely fastened.

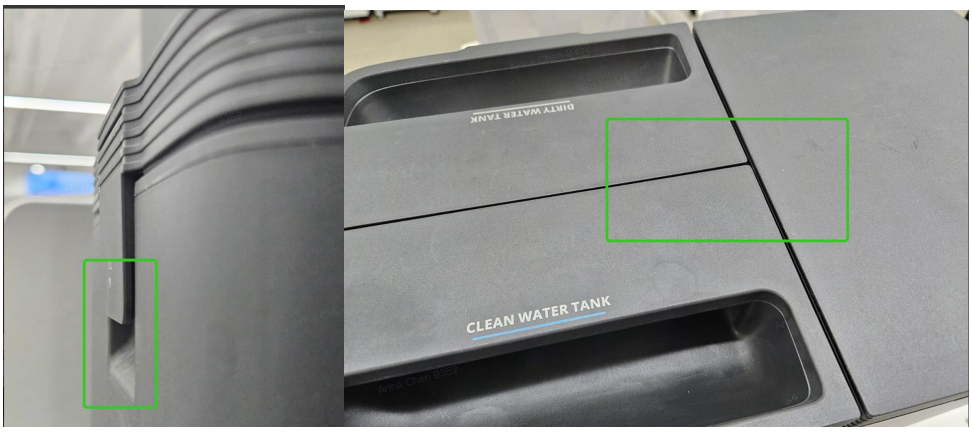

- **Remove and Reinstall the Dirty Water Tank**

If the dirty water tank is not full, try removing and reinstalling it to ensure it is properly installed. Please note that incorrect placement can cause the system to malfunction.

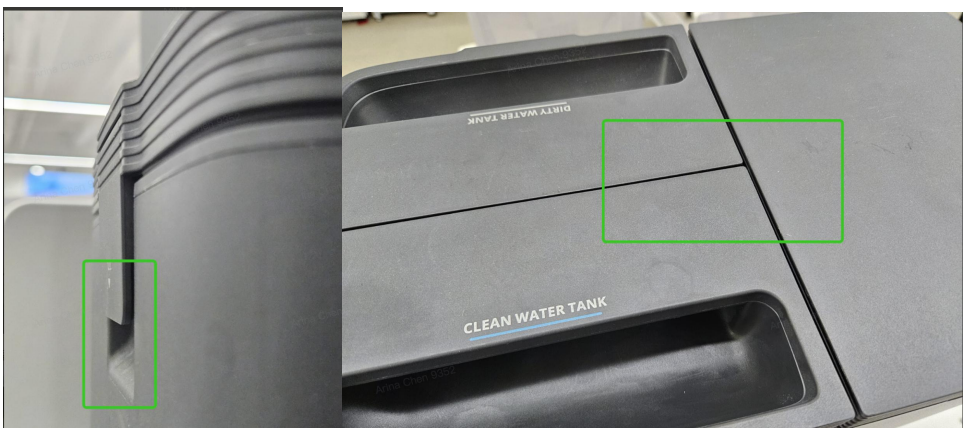

- **Inspect the Sealing Rings on the Omni Station**

If you notice any blockages or missing sealing rings, please contact our after-sales service team for assistance in replacing the sealing rings. When inspecting the Omni Station where the dirty water tank is seated, you should find two sealing rings installed in two distinct locations to guarantee a proper seal. For visual guidance, please refer to the following image. Please pay special attention to the area highlighted in the red rectangle, which indicates the absence of a sealing ring.

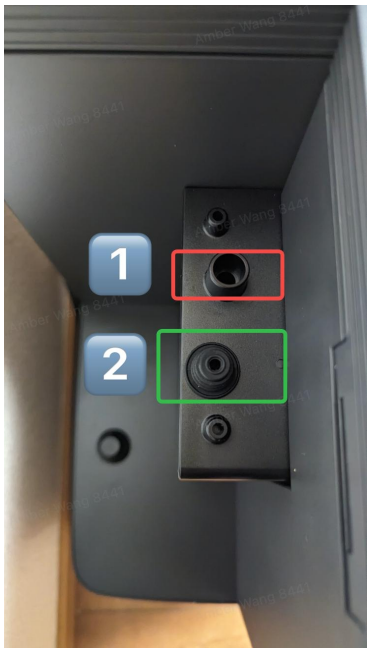

- **Verify the Sewage Pipe Connection**

Ensure that the sewage pipe is correctly inserted into the cleaning tray. An improper connection can prevent wastewater from being drained into the dirty water tank. Please refer to the following images for visual guidance:

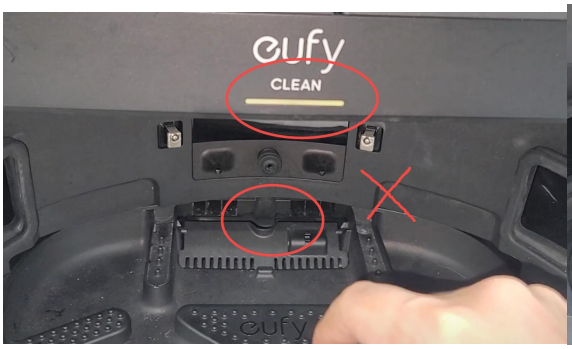



- **Check the Cleaning Tray**

Check if the filter holes on the cleaning tray are clogged; if so, the cleaning tray needs to be manually cleaned.



- **Test the Cleaning Tray and Hall Sensor**

With the clean water tank and dirty tank properly installed and the dirty water tank not full, remove the cleaning tray. Use the magnet from the dustbin filter to touch the position corresponding to the original cleaning tray float. If the indicator light on the Omni Station changes, it indicates that the robotic vacuum cleaner's Hall sensor is functioning correctly. On the other hand, if the indicator light on the Omni Station does not change, it indicates a malfunction in the Hall sensor. Please refer to the following images for visual guidance:

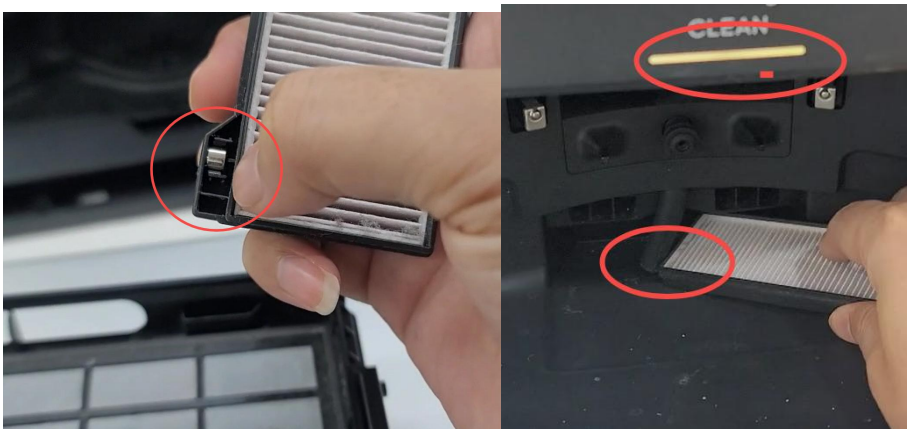

- **Check the Firmware/App Version**

It is recommended to always update the robot's firmware and the eufy Clean app to the latest version to maintain the robot's optimal cleaning performance.

- **How to Resolve the "Cleaning Tray Water Full or Not in Place, Please Check."**

If you encounter Error 6032 (Cleaning tray water full or not in place), in addition to trying the above troubleshooting steps, please also confirm the following details:

1. Whether the cleaning tray is installed correctly.
2. Whether the **grates** inside the cleaning tray are installed.

Please refer to the following image that shows the grates inside the cleaning tray:





If you have any further questions or concerns, please don't hesitate to contact eufy Support Engineers for assistance.

(2) Error: There is an issue with the base station water filling device, please contact customer service./Insufficient water alert.

If your Omni Station does not dispense water when it is supposed to wash the mopping pads and the robot emits "The clean water in the station is insufficient, please add water" voice prompt, please follow the steps below to solve the issue.

This issue may be quickly solved by running the mop-washing task several times to verify if water can be dispensed from the Omni Station, and the reason is that air bubbles may be trapped in the water pipe and cause abnormal water pumping.

If running the mop-washing task does not solve the issue, please try the following troubleshooting steps:

- Check whether the sealing ring of the clean water tank in the Omni Station is in place and whether it is damaged. **And please send us a picture showing the sealing ring if the issue persists.**

- **Please empty the water tank and shake it vigorously a few times (there may be abnormalities in the internal parts of the one-way valve)**, and then try the mop-washing task a few times to confirm whether water can be dispensed from the Omni Station.

- Confirm whether the clean water tank filter is blocked or covered by foreign objects. **And please send us a picture showing the status of the clean water tank filter if the issue persists.**

- Confirm whether the water pipe that connects to the clean water tank is loose. If the water pipe is loose, please remove and reconnect the water pipe to ensure it has a secure connection. **And please send us a picture showing the status of the water pipe if the issue persists.**

- Please confirm whether any third-party cleaning solutions (especially ones that produce a lot of foam bubbles) or corrosive solutions (such as white vinegar, 84 disinfectant, etc) have been added to the Omni Station's water tank. Please note that corrosive solutions may cause permanent damage to the water pump.

(3) **Error: The clean water in the station is insufficient, please add water.**

If your Omni Station does not dispense water when it is supposed to wash the mopping pads and the robot emits "The clean water in the station is insufficient, please add water" voice prompt, please follow the steps below to solve the issue.

This issue may be quickly solved by running the mop-washing task several times to verify if water can be dispensed from the Omni Station, and the reason is that air bubbles may be trapped in the water pipe and cause abnormal water pumping.

If running the mop-washing task does not solve the issue, please try the following troubleshooting steps:

- Check whether the sealing ring of the clean water tank in the Omni Station is in place and whether it is damaged. Please send us a picture showing the status of the sealing ring if the issue persists.



- Please empty the water tank and shake it vigorously a few times (there may be abnormalities in the internal parts of the one-way valve).

- Confirm whether the clean water tank filter is blocked or covered by foreign objects.




- Confirm whether the water pipe that connects to the clean water tank is loose. If the water pipe is loose, please remove and reconnect the water pipe to ensure it has a secure connection.

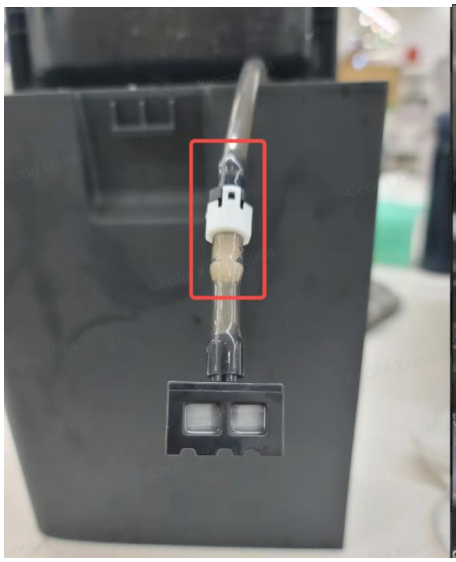


- Please confirm whether any third-party cleaning solutions (especially ones that produce a lot of foam bubbles) or corrosive solutions (such as white vinegar, 84 disinfectant, etc) have been added to the Omni Station's water tank. Please note that corrosive solutions may cause permanent damage to the water pump.

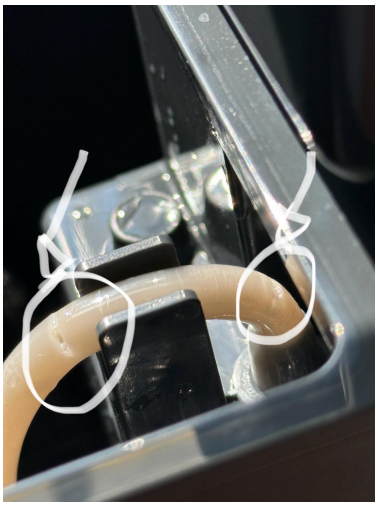

If none of the above troubleshooting steps can solve the issue, the Omni Station may need to be replaced due to damaged internal parts, such as the solenoid valve and flow meter.

(4) **Water leakage from the station**

About the Water Dripping from the Base Station issue your RoboVac encountered, which may be due to an unstable check valve, causing water from the clean water tank to be continuously siphoned into the cleaning tray.

It is suggested to empty the clean water tank and shake it vigorously. Refill the tank and check if the leakage persists. If the problem continues, replace the clean water tank with a new one.



2. Tips for the X10 Pro Omni to Build a Map Quickly

The robot will automatically start t**he Quick Mapping feature to create a complete cleaning map for the entire house before the X10 Pro Omni starts its first cleaning cycle if you press the start button for the first time.** The robot vacuum will spend a few minutes quickly exploring your entire home and creating a cleaning map. Please note that the robot vacuum will not clean the floor during the Quick Mapping process. Once complete, it will proceed with home cleaning

Quick Mapping: The robot vacuum quickly navigates around the house to explore and create a complete cleaning map. The path of the robot vacuum will be random and it will not follow a regular pattern along walls or in a zigzag shape.

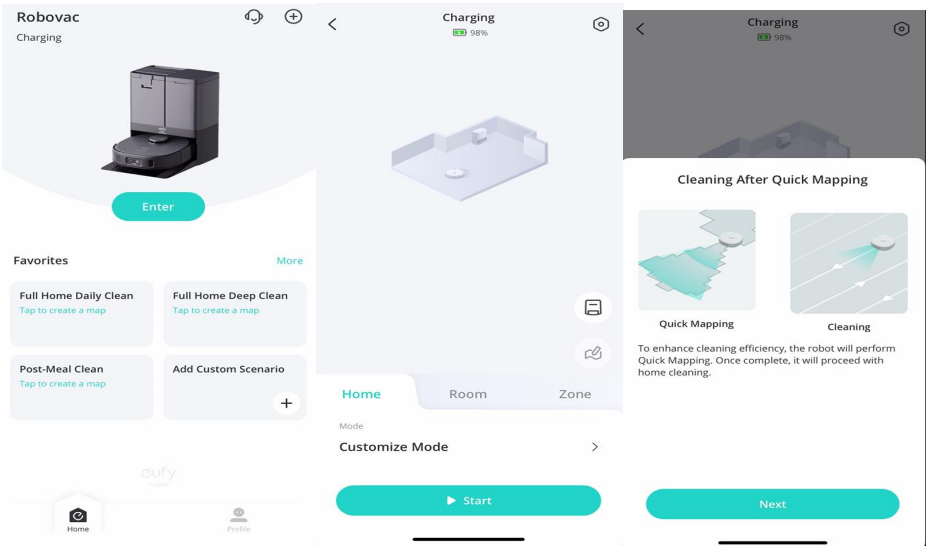

To build a map for the first time:

- Place the robot vacuum on the Omni Station before starting it.
- Open the doors of all the rooms that you want the robot vacuum to clean.
- Remove objects such as cables, toys, etc from the floor that may trap/entangle the robot vacuum.
- Please do not manually move the robot vacuum during the mapping process.
- Let the robot vacuum return to the Omni Station automatically to save a complete map.

Your robot vacuum will display a detailed control page after a map has been successfully created and saved.

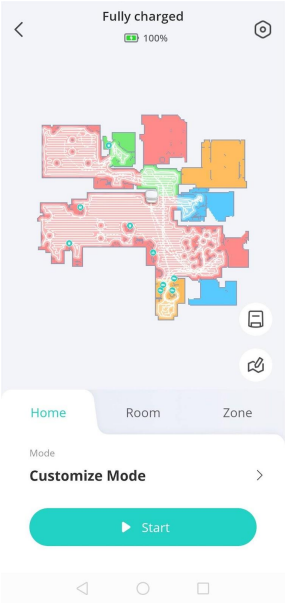

If your X10 Pro Omni failed to save a map after completing a full cleaning cycle, please refer to the following troubleshooting steps to solve the issue:

- Please enable the "Multi-Map Saving" feature. When the Multi-Map Saving switch is turned on, the robot vacuum can save multiple valid maps, which are saved both locally on the robot vacuum and eufy cloud. Please note that **up to five maps can be saved. If the Multi-Map Saving feature is not enabled, the newly created map will replace the old map.**

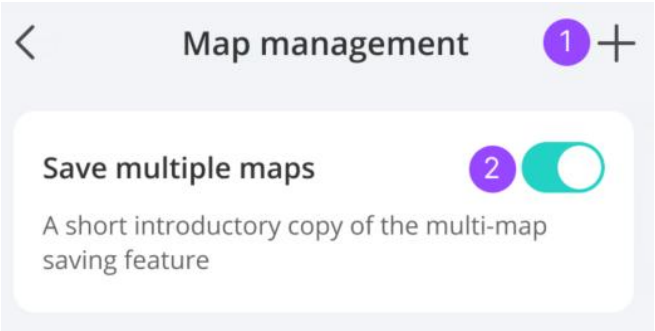

- Remember to start the robot vacuum from the Omni Station.
- The X10 Pro Omni can save up to five valid maps when the "Multi-Map Saving" feature is turned on. The robot vacuum saves these maps both locally on the robot vacuum and eufy cloud. If the total number of maps exceeds five maps, the eufy Clean app will provide you with the option of either replacing the previous map or not saving the current map.
- Check if the position of either the robot vacuum or Omni station has been adjusted or if the surroundings have changed. The robot vacuum will try to reposition and remap to match its surroundings.
- Please note that manually moving the robot vacuum may cause the map to be lost. Please do not manually move the robot vacuum while it is cleaning.

If you have any further questions, please don't hesitate to contact eufy support engineers for assistance.

3. Does the X10 Pro Omni Support Multiple Floors? Can the X10 Pro Omni Save Multiple Maps?

Yes! The X10 Pro Omni supports multiple floors, and users can choose to save one or multiple maps by enabling the Multi-Map Saving feature in the eufy Clean app. Please follow the instructions shown below:

Click the Settings icon on the top right corner＞ click Manage Map ＞turn on the "Multi-Map Saving" switch.

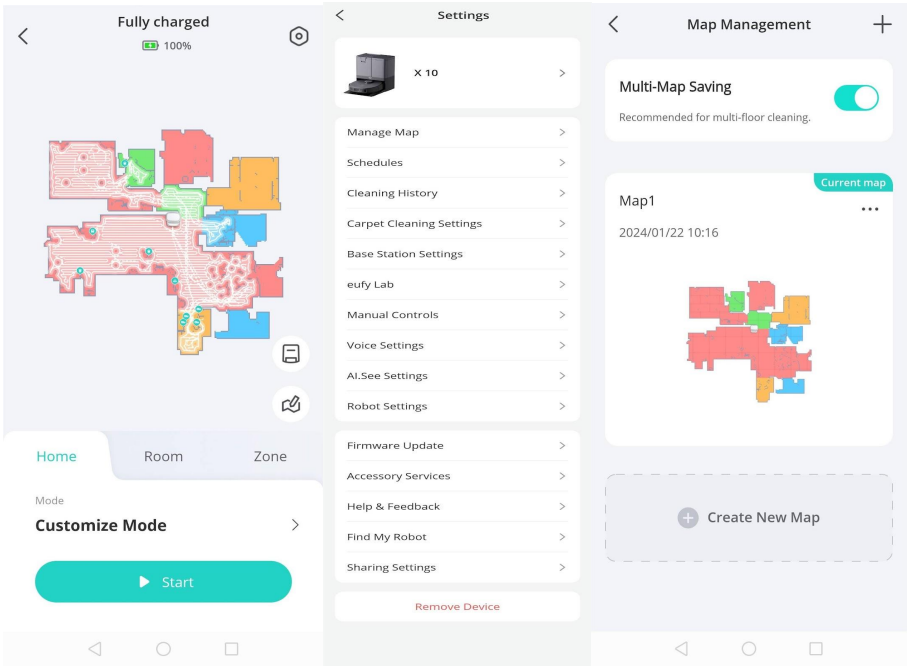

Please note that the"Multi-Map Saving" switch is turned off by default. When the Multi-Map Saving switch is turned on, the robot can save multiple valid maps, which are saved both locally on the robot and eufy cloud. Please note that **up to five maps can be saved. If the Multi-Map Saving feature is not enabled, the newly created map will replace the old map.**

When a cleaning robot operates on a floor without the Omni station, it adapts its cleaning strategy to ensure optimal performance.

Upon completing a cleaning cycle on a floor lacking an Omni station, the robot is programmed to return to its starting point. This default behavior ensures that the robot does not wander aimlessly or become stranded away from its charging dock or maintenance area. **The absence of an Omni station also affects the type of cleaning**

tasks the robot can perform effectively. For vacuum tasks, the robot operates as usual.

However, mopping tasks present a different challenge. Without the Omni station, the robot cannot clean or moisten its mopping mop pads as it would typically do to maintain cleaning efficiency. To ensure that the cleaning quality is not compromised, the robot automatically switches to a "vacuum-only" mode. This adjustment prevents the robot from spreading dirt or leaving streaks on the floor with a dry or dirty mop.

For users who require mopping services on floors without an Omni station, it is essential to ensure that the robot has access to an Omni station on the same floor where the cleaning task is being performed. This allows the robot to maintain its mopping pads in optimal condition, providing a thorough and effective cleaning.

If you have any further questions, please don't hesitate to contact eufy support engineers for assistance.

4. What should I do if my X10 Pro Omni is not charging or powering on?

If you are experiencing issues with your X10 Pro Omni robotic vacuum cleaner not charging or powering on, there are several troubleshooting steps you can take to diagnose and resolve the issue. This article is designed to provide step-by-step instructions on how to troubleshoot these issues.

Note: It is highly recommended to always refer to the user manual provided with your X10 Pro Omni robotic vacuum cleaner for specific instructions and safety information related to troubleshooting and maintenance.

Step 1: Checking the Indicator Light on the Omni Station

The first step is to check the indicator light on the Omni Station and confirm it is displaying a steady white light. If the Omni Station does not display a steady white light, it could indicate that the power cord is not properly connected. Please make sure that the power cord is securely plugged into the Omin Station and a functioning wall outlet.



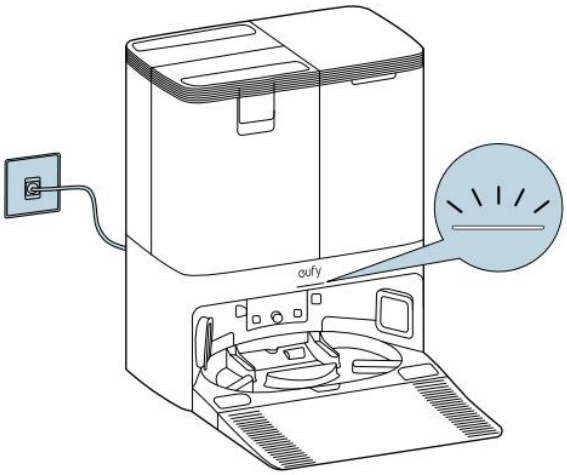

Step 2: Cleaning Charging Contacts and Signal Modules

Dirt and grime can accumulate on the charging contacts and signal modules, which can interfere with the charging process. Please make sure to clean the charging contacts on the robotic vacuum cleaner, the signal receiver module lenses, and the charging prongs and signal transmitter module lenses on the Omni Station.

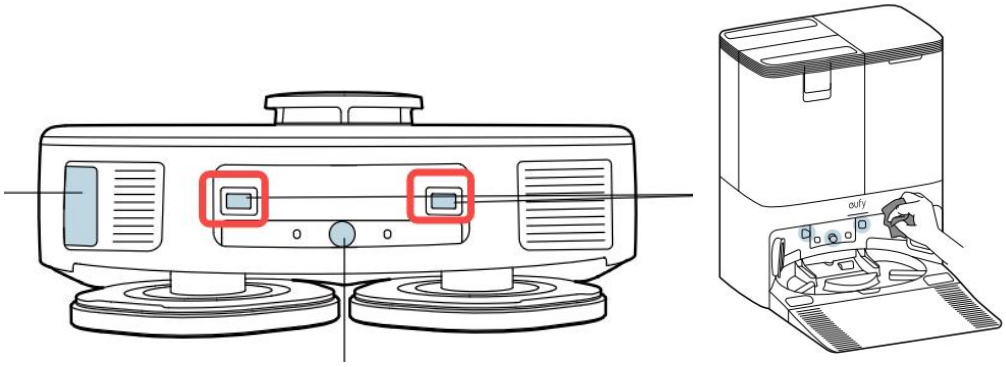

Step 3: Resetting the Robot

If the robotic vacuum cleaner still does not respond after checking the power supply and cleaning the charging contacts, you may need to perform a reset. To do this, use a pin or a similar object to press the Reset button on the robotic vacuum cleaner. This process will force the robotic vacuum cleaner to recover from its unresponsive state. After pressing the Reset button, simply restart the robotic vacuum cleaner to check if it can function normally.

Step 4: Checking Environmental Temperature

Lastly, please confirm that the environmental temperature is not below 4°C (39.2°F) or above 45°C (113°F). Please note that extreme temperatures can cause the robotic vacuum cleaner to enter a protective state, preventing it from charging. If the robotic vacuum cleaner is in a cold environment, simply allow it to warm up to at least 8°C (46.4°F) before attempting to charge the battery. Similarly, if the robotic vacuum cleaner

is in a hot environment, simply let it cool down to at least 41°C (105.8°F) before attempting to charge the battery.

If you have any further questions, please don't hesitate to contact eufy support engineers for assistance.

5. X10 Pro Omni Multi-Floor Mopping Feature Guidance - Without Using the Omni Station

When using your X10 Pro Omni to mop multiple floors without the Omni Station, please first update the robot's firmware to version 2.1.0 or newer to enable the robot to mop multiple floors even when its Omni Station is not placed on that floor.

Q: How do I update the firmware to version 2.1.0 or newer?

A: To update the firmware, please follow the instructions in the eufy Clean app or refer to the user manual. Ensure your robot is connected to your Wi-Fi network and the eufy Clean app on your phone is up to date to receive the latest firmware updates.

After updating the firmware to version 2.1.0 or newer, please proceed with the following steps:

1. Place the robot on the Omni Station and launch the eufy Clean app, then select "Base Station Operations" > "Clean Mop" after filling the robot's built-in water tank and washing the mopping pad.

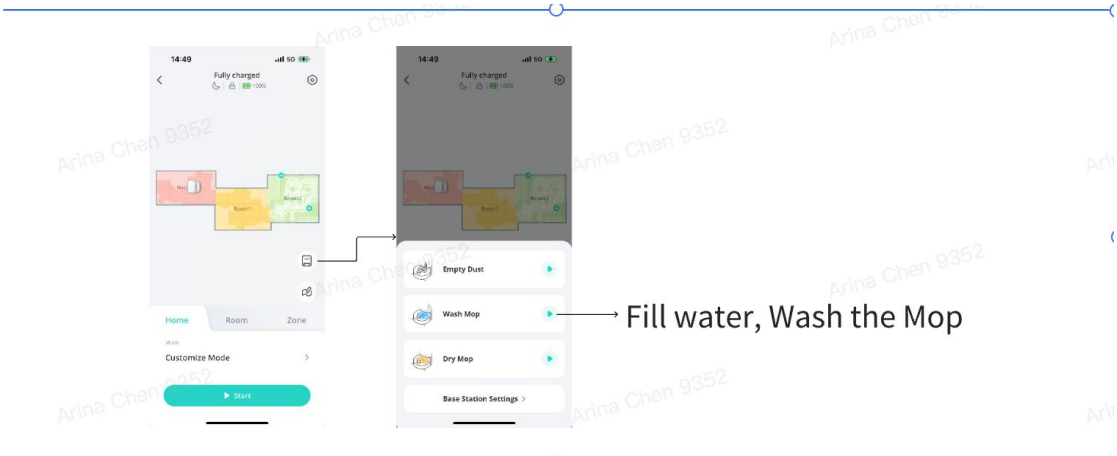

2. Wait for the mopping pad cleaning to complete, then carry the robot to the floor where you want to mop.
3. Ensure the robot's cleaning mode is set to a mopping-related mode (Sweep & Mop or Mop Only mode) and start the cleaning process. The robot will then begin mopping the floor automatically.

4. To ensure the robot's cleaning performance during its mopping session, if it detects that the water level in its built-in tank is insufficient and the mopping pad is expected to dry out in approximately 10 minutes, the robot will automatically lift its mopping pad. Please note that the remaining uncleaned areas will be swept but not mopped.

Q: Can I purchase a separate Omni Station if needed?

A: Yes. If you would like to place an additional Omni Station on a different floor, you can purchase a new Omni Station and its power adapter from our official website.

If you have any further questions or concerns, please don't hesitate to contact eufy Support Engineers for assistance.

6. What should I do if my X10 Pro Omni fails to return to its Omni Station?

If you are experiencing issues with your X10 Pro Omni robotic vacuum cleaner failing to return to its Omni Station, there are several steps you can take to troubleshoot the issue. This article is designed to provide step-by-step instructions on how to make sure your X10 Pro Omni can successfully return to its Omni Station.

1. Checking the Indicator Light on the Omni Station

The first step is to check the indicator light on the Omni Station and confirm it is displaying a steady white light. If the Omni Station does not display a steady white light, it could indicate that the power cord is not properly connected. Please make sure that the power cord is securely plugged into the Omin Station and a functioning wall outlet.



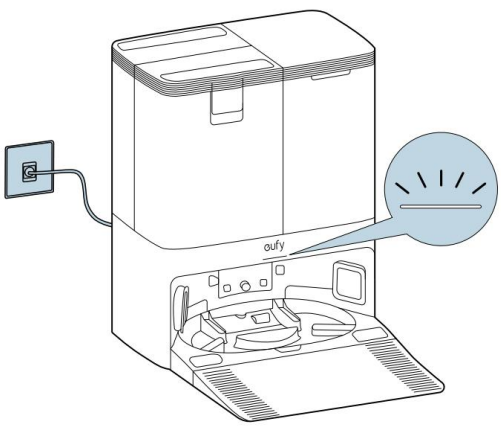

2. Inspecting the Swivel Wheel

Sometimes, debris can get caught in the swivel wheel, thus preventing the robotic vacuum cleaner from navigating back to the Omni Station. Please remove the swivel wheel and clean out any trapped hair or debris. Once cleaned, simply reinstall the swivel wheel and check if the robotic vacuum cleaner can successfully return to the Omni Station.



3. Verifying Proper Installation of the Omni Station's Extension Board

Please make sure that the extension board of the Omni Station has been correctly installed. Without the extension board, the robotic vacuum cleaner may not be able to climb onto the Omni Station to recharge the battery.



4. Ensuring Proper Placement of the Omni Station

It is extremely important to ensure that the area around the Omni Station is free of water spills, grease, or other contaminants that may affect the robotic vacuum cleaner's ability to dock successfully. If necessary, place the Omni Station at a new location. The new location should meet the requirements outlined in the user manual, which includes placing the Omni Station in an open area with a specified range of clearance and on a non-slippery surface.

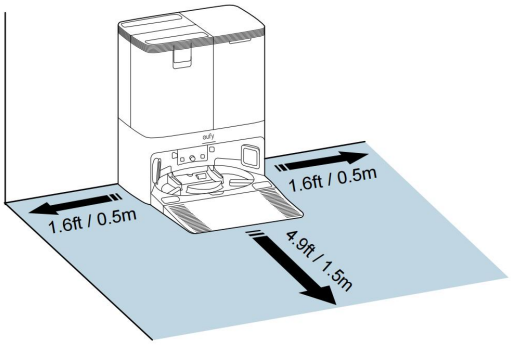

5. Cleaning Charging Contacts and Signal Modules

Dirt and grime can accumulate on the charging contacts and signal modules, which can interfere with the charging process. Please make sure to clean the charging contacts on the robotic vacuum cleaner, the signal receiver module lenses, and the charging prongs and signal transmitter module lenses on the Omni Station. Please refer to the red rectangle areas in the following images for guidance on the specific areas to clean.

Charging Contacts

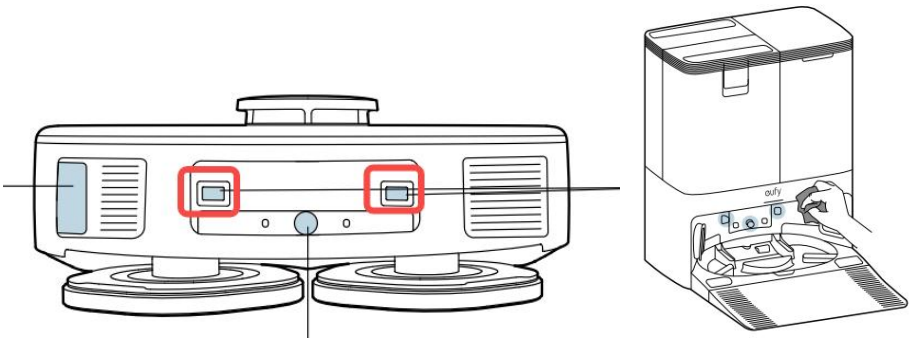

Signal Modules

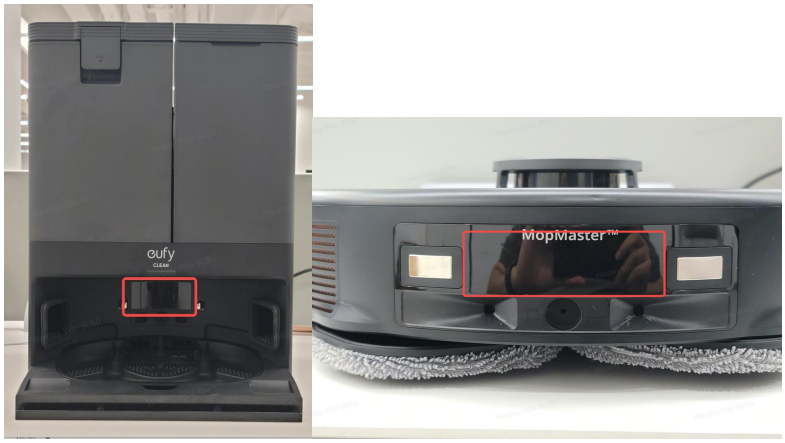

By following these troubleshooting steps, you should be able to resolve most issues related to the X10 Pro Omni failing to return to its Omni Station. Additionally, please note that regular maintenance and proper placement of the Omni Station can also help prevent docking issues from occurring and ensure that your robotic vacuum cleaner functions without issues.

If you have any further questions or concerns, please don't hesitate to contact eufy Support Engineers for assistance.