Operator's Manual

Lazer Z® E-Series Riding Mowers

Model—Serial Range

LRE810CBV48DA3—420130747 and Up
LRE810GBV604A3—420130747 and Up

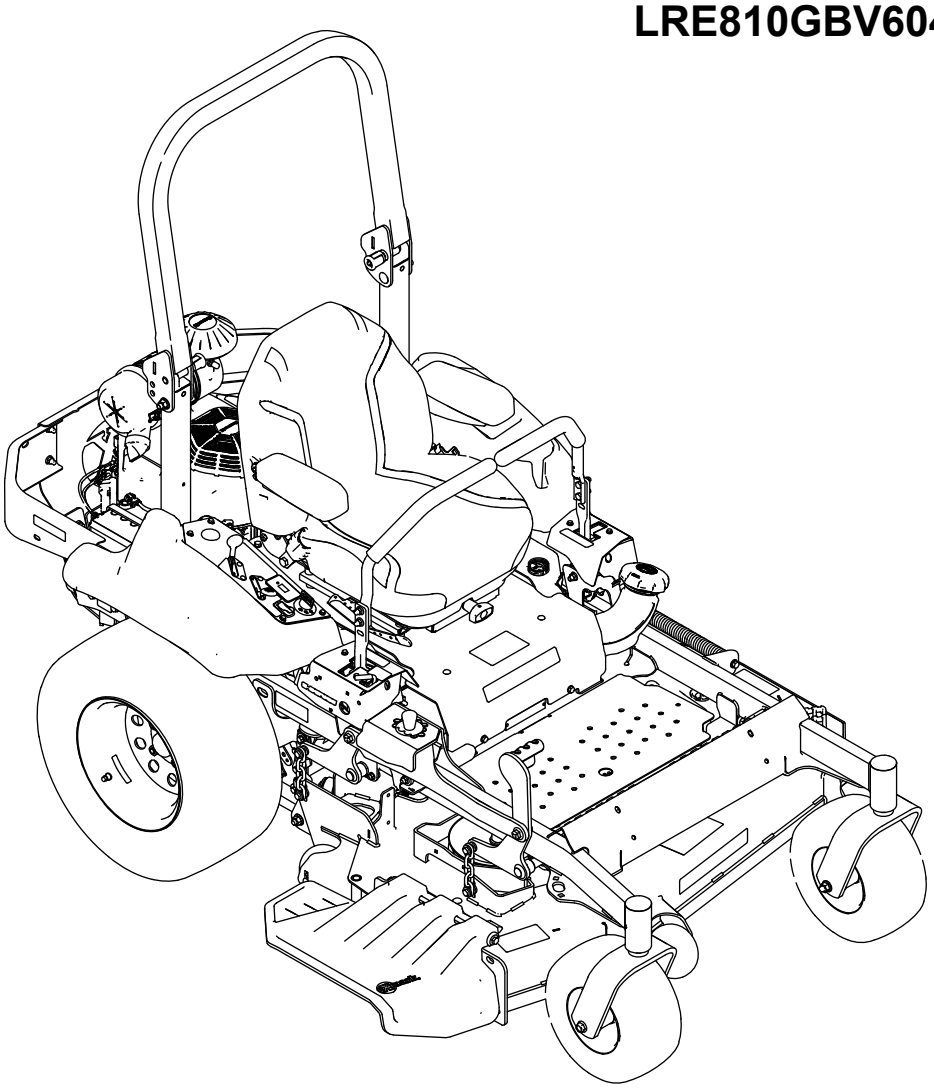

3477-646A

Original Instructions (EN)

*3477-646*A

Disclaimers and Regulatory Information

It is a violation of California Public Resource Code Section 4442 or 4443 to use or operate the engine on any forest-covered, brush-covered, or grass-covered land unless the engine is equipped with a spark arrester, as defined in Section 4442, maintained in effective working order or the engine is constructed, equipped, and maintained for the prevention of fire.

Gross or Net Torque: The gross or net torque of this engine was laboratory rated by the engine manufacturer in accordance with the Society of Automotive Engineers (SAE) J1940 or J2723. As configured to meet safety, emission, and operating requirements, the actual engine torque on this class of mower will be significantly lower. Please refer to the engine manufacturer's information included with the machine.

The enclosed engine owner's manual is supplied for information regarding the US Environmental Protection Agency (EPA) and the California Emission Control Regulation of emission systems, maintenance, and warranty. Replacements may be ordered through the engine manufacturer.

⚠ WARNING

CALIFORNIA
Proposition 65

The engine exhaust from this product contains chemicals known to the State of California to cause cancer, birth defects, or other reproductive harm.

Battery posts, terminals, and related accessories contain lead and lead compounds, chemicals known to the State of California to cause cancer and reproductive harm. Wash hands after handling.

Use of this product may cause exposure to chemicals known to the State of California to cause cancer, birth defects, or other reproductive harm.

Table of Contents

Chapter 1: Introduction 1–1
- Intended Use 1–1
- Getting Help 1–1
- Manual Conventions 1–2
  - Safety Alert Classifications 1–2

Chapter 2: Safety 2–1
- General Safety 2–1
- Slope Indicator 2–2
- Safety and Instructional Decals 2–3

Chapter 3: Product Overview 3–1
- Control Panel 3–2
- Parking Brake 3–3
- Motion-Control Levers 3–4
  - Neutral-Lock Position 3–4

© 2025—Exmark Mfg. Co., Inc.

415 Industrial Row
Beatrice, NE 68310

Contact us at www.Exmark.com
Printed in the USA

All rights reserved

Height-of-Cut Pin 3–4
Deck-Lift Pedal 3–4
Transport Lock 3–5
Fuel Gauge 3–5
Specifications 3–5
Chapter 4: Operation 4–1
Before Operation 4–1
Before Operation Safety 4–1
Fuel 4–2
Using the Rollover-Protection System (ROPS) 4–4
Performing Daily Maintenance 4–6
Break-In Time 4–6
Safety-Interlock System 4–6
Positioning the Seat 4–10
Adjusting the Seat Suspension 4–11
Adjusting the Motion-Control Lever Height 4–11
Adjusting the Motion-Control Lever Tilt 4–12
During Operation 4–13
During Operation Safety 4–13
Entering the Operator's Position 4–16
Starting the Engine 4–16
Shutting Off the Engine 4–17
Driving the Machine 4–17
Operating the Mower Blade-Control Switch (PTO) 4–19
Side Discharge 4–20
Adjusting the Height of Cut 4–21
Adjusting the Anti-Scalp Rollers 4–21
Operating Tips 4–22
After Operation 4–23
After Operation Safety 4–23
Using the Fuel-Shutoff Valve 4–24
Cleaning the Machine 4–24
Hauling the Machine 4–25
Chapter 5: Maintenance 5–1
Maintenance Safety 5–1
Recommended Maintenance Schedule 5–2
Pre-Maintenance Procedures 5–3
Moving a Non-Functioning Machine 5–3
Removing or Installing the Floor Pan 5–5
Lubrication 5–6
Greasing the Machine 5–6
Greasing the Caster-Wheel Hubs 5–6
Greasing the Caster Pivots 5–8
Engine Maintenance 5–8
Engine Safety 5–8
Checking the Spark Arrester 5–9
Servicing the Air Cleaner 5–9
Engine-Oil Service 5–10
Servicing the Spark Plug 5–13
Cleaning the Cooling System 5–15
Fuel Maintenance 5–15
Replacing the Fuel Filter 5–16
Electrical System Maintenance 5–16

Electrical System Safety 5–16
Battery Service 5–17
Jump-Starting the Machine 5–22
Servicing the Fuses 5–24
Drive System Maintenance 5–24
Checking the Tire Pressure 5–24
Checking the Wheel Lug Nuts 5–24
Adjusting the Tracking 5–24
Adjusting the Motion-Control Linkage 5–25
Adjusting the Electric Clutch 5–27
Adjusting the Pre-load Caster Pivot and Gauge Wheel Pivot Bearings 5–29
Belt Maintenance 5–30
Inspecting the Belts 5–30
Replacing the Mower Belt 5–30
Hydraulic System Maintenance 5–31
Hydraulic System Safety 5–31
Hydraulic-Fluid Specifications 5–32
Checking the Hydraulic-Fluid Level 5–32
Changing the Hydraulic Fluid and Filter 5–32
Bleeding the Hydraulic System 5–34
Mower-Deck Maintenance 5–35
Blade Safety 5–35
Blade Service 5–35
Leveling the Mower Deck 5–39
Adjusting the Parking Brake 5–42
Replacing the Grass Deflector 5–43
Brake Maintenance 5–44
Cleaning 5–44
Washing the Machine 5–44
Disposing of Waste 5–45
Chapter 6: Storage 6–1
Storage Safety 6–1
Preparing the Machine for Storage Over 30 Days 6–1
Storing the Battery 6–2
Battery Storage Tips 6–3
Chapter 7: Troubleshooting 7–1
Chapter 8: Schematics 8–1
Electrical Diagram 8–2
California Proposition 65 Warning Information

Chapter 1

Introduction

Intended Use

This rotary-blade, riding lawn mower is intended to be used by professional, hired operators. It is designed primarily for cutting grass on well-maintained lawns on residential or commercial properties. Using this product for purposes other than its intended use could prove dangerous to you and bystanders.

Read this information carefully to learn how to operate and maintain your product properly and to avoid injury and product damage. You are responsible for operating the product properly and safely.

Getting Help

Visit www.Exmark.com for product safety and operation training materials, accessory information, help finding a dealer, or to register your product.

Whenever you need service, genuine Exmark parts, or additional information, contact an Authorized Service Dealer or Exmark Customer Service and have the model and serial numbers of your product ready. These numbers are located on the serial plate on your product 1. Write the numbers in the space provided.

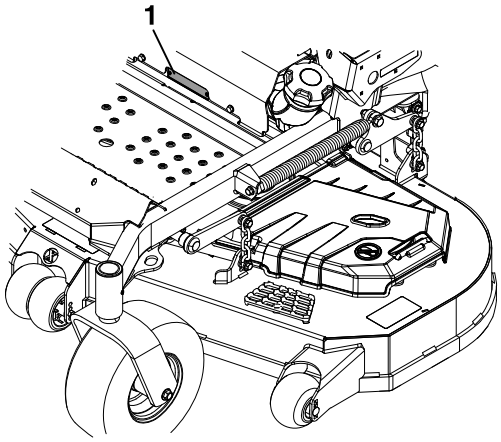

g484851S

IMPORTANT

With your mobile device, you can scan the QR code on the serial number decal (if equipped) to access warranty, parts, and other product information.

Model Number:		**Serial Number:**	

Manual Conventions

This manual identifies potential hazards and has safety messages identified by the safety-alert symbol, which signals a hazard that may cause serious injury or death if you do not follow the recommended precautions.



G405934

This manual uses 2 words to highlight information. **Important** calls attention to special mechanical information and **Note** emphasizes general information worthy of special attention.

Safety Alert Classifications

The safety-alert symbol shown in this manual and on the machine identifies important safety messages that you must follow to prevent accidents.

Safety-alert symbol appears above information that alerts you to unsafe actions or situations and is followed by the word **DANGER**, **WARNING**, or **CAUTION**.

DANGER

Danger indicates an imminently hazardous situation which, if not avoided, *will* result in death or serious injury.

WARNING

Warning indicates a potentially hazardous situation which, if not avoided, *could* result in death or serious injury.

CAUTION

Caution indicates a potentially hazardous situation which, if not avoided, *may* result in minor or moderate injury.

General Safety

This product is capable of amputating hands and feet and of throwing objects. Always follow all safety instructions to avoid serious personal injury or death.

- Read, understand, and follow the instructions and warnings in this *Operator's Manual* and on the machine, engine, and attachments before starting the engine.
- Do not allow children or untrained people to operate or service the machine. Allow only people who are responsible, trained, familiar with the instructions, and physically capable to operate or service the machine.
- Keep bystanders, particularly children, away from the operating area.
- Always keep the roll bar in the fully raised and locked position and use the seat belt.
- Do not operate the machine near drop-offs, ditches, embankments, water, or other hazards, or on slopes greater than 15°.
- Do not put your hands or feet near moving parts.
- Do not operate the machine without all safety shields, guards, switches, and other devices in place and working properly.
- Park the machine on a level surface, disengage the drives, engage the parking brake, shut off the engine, remove the key, and wait for all moving parts to stop before leaving the operator's position.
- Wait for the machine to cool before servicing, adjusting, fueling, cleaning, or storing it.

Slope Indicator

You may copy this page for personal use.

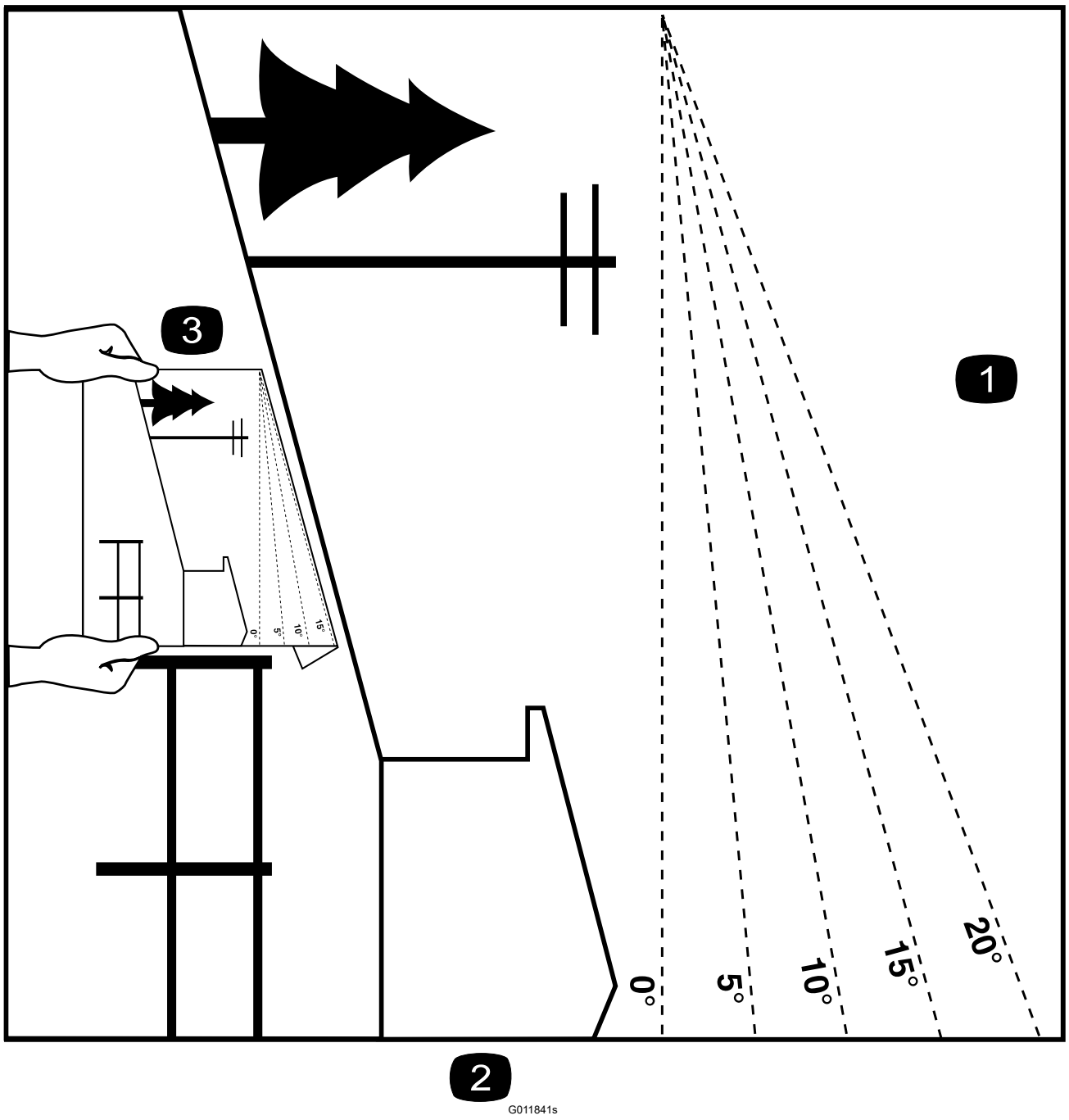

(1) The maximum slope you can operate the machine on is 15 degrees. Use the slope chart to determine the degree of slope of hills before operating. **Do not operate this machine on a slope greater than 15 degrees.** Fold along the appropriate line to match the recommended slope.

(2) Align this edge with a vertical surface, a tree, building, fence pole, etc.

(3) Example of how to compare slope with folded edge

Safety and Instructional Decals

Safety decals and instructions are easily visible to the operator and are located near any area of potential danger. Replace any decal that is damaged or missing.

Battery Symbols

Some or all of these symbols are on your battery.



s_batterysymbols2

1. Explosion hazard
2. No fire, open flame, or smoking
3. Caustic liquid/chemical burn hazard
4. Wear eye protection.
5. Read the *Operator's Manual*.
6. Keep bystanders away from the battery.
7. Wear eye protection; explosive gases can cause blindness and other injuries.
8. Battery acid can cause blindness or severe burns.
9. Flush eyes immediately with water and get medical help fast.
10. Contains lead; do not discard

Decal Part: 99-8936

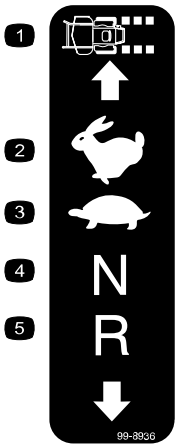

s_decal99-8936

1. Machine speed
2. Fast
3. Slow
4. Neutral
5. Reverse

Decal Part: 106-2655



s_decal106-2655

1. Warning—do not touch or approach moving belts; remove the key and read the instructions before servicing or performing maintenance.

Decal Part: 106-5517

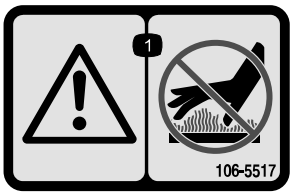

s_decal106-5517

(1) Warning—do not touch the hot surface.

Decal Part: 107-3069

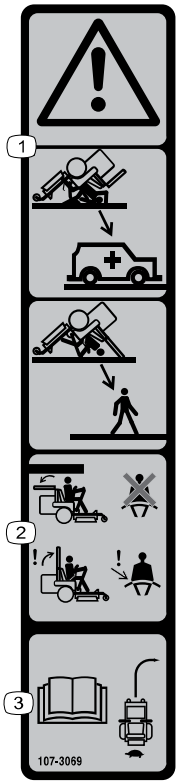

s_decal107-3069

(1) Warning—there is no rollover protection when the roll bar is down.

(2) To avoid injury or death from a rollover accident, keep the roll bar in the fully raised and locked position and wear the seat belt. Lower the roll bar only when absolutely necessary; do not wear the seat belt when the roll bar is down.

(3) Read the *Operator's Manual*; drive slowly and carefully.

Decal Part: 116-5988

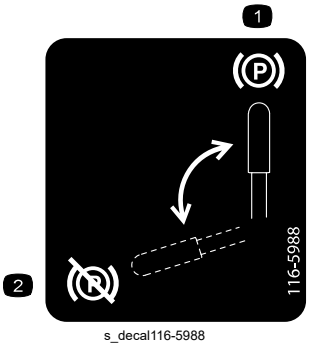

s_decal116-5988

(1) Parking brake—engaged

(2) Parking brake—disengaged

Decal Part: 132-0871

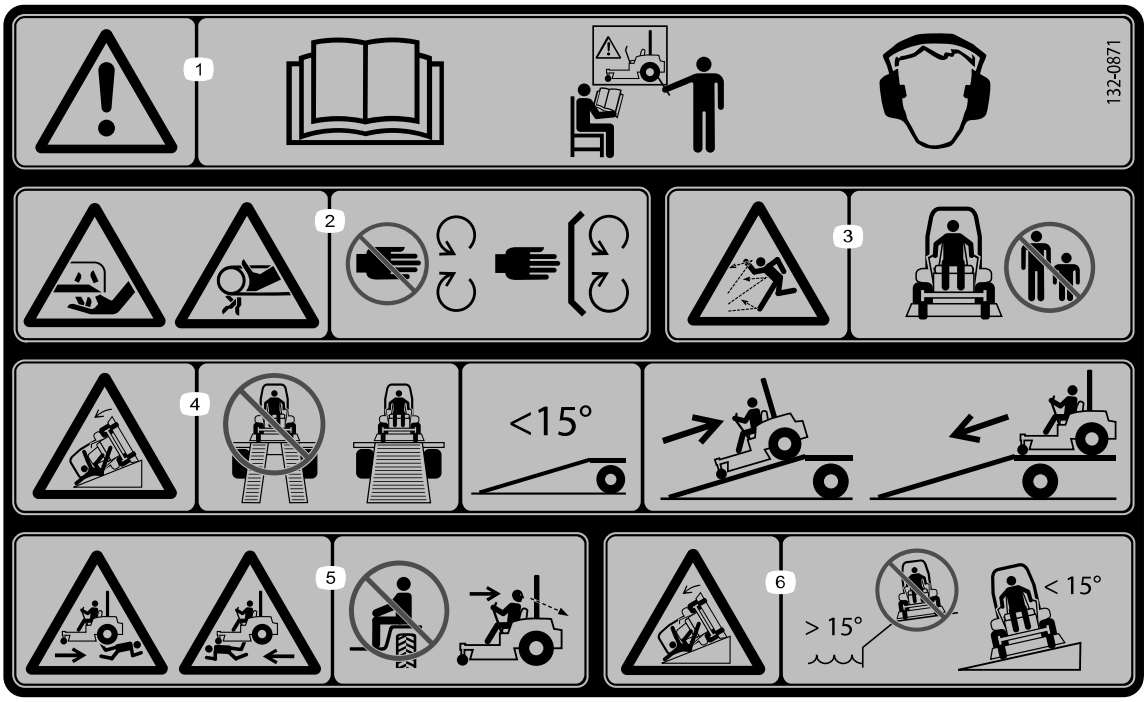

s_decal132-0871

Note: This machine complies with the industry standard stability test in the static lateral and longitudinal tests with the maximum recommended slope indicated on the decal. Review the instructions for operating the machine on slopes in the *Operator's Manual* as well as the conditions in which you would operate the machine to determine whether you can operate the machine in the conditions on that day and at that site. Changes in the terrain can result in a change in slope operation for the machine.

1. Warning—read the *Operator's Manual*; all operators should be trained before operating the machine; wear hearing protection.
2. Cutting/dismemberment hazard of hand—stay away from moving parts; keep all guards and shields in place.
3. Thrown object hazard—keep bystanders away.
4. Tipping hazard—do not use dual ramps when loading onto a trailer; use 1 ramp wide enough for the machine; use a ramp with a slope less than 15°; back up the ramp (in reverse) and drive forward off the ramp.
5. Runover hazard—do not carry passengers; look behind you when moving in reverse.
6. Tipping hazard—do not use the machine near drop-offs or on slopes greater than 15°; only operate across slopes less than 15°.

Decal Part: 133-8062



s_decal133-8062

Decal Part: 135-0328

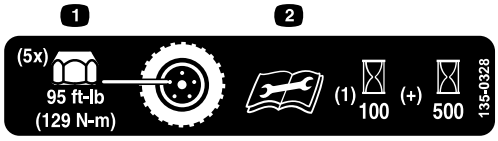

s_decal135-0328

1 Torque the wheel lug nuts to 129 N·m (95 ft-lb).

2 Read and understand the *Operator's Manual* before performing any maintenance; check the torque after the first 100 hours, then every 500 hours, thereafter.

Decal Part: 146-2233

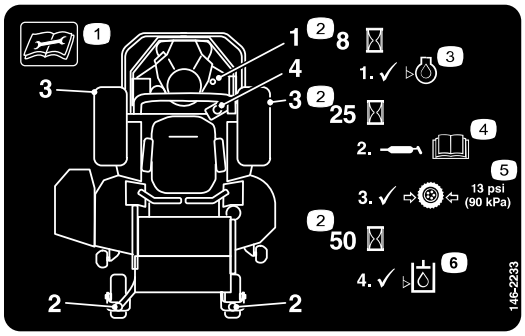

s_decal146-2233

1 Read the instructions before servicing or performing maintenance.

2 Time interval

3 Engine-oil level

4 Refer to the *Operator's Manual* for grease-point information.

5 Tire pressure

6 Hydraulic-fluid level

Decal Part: 146-2359

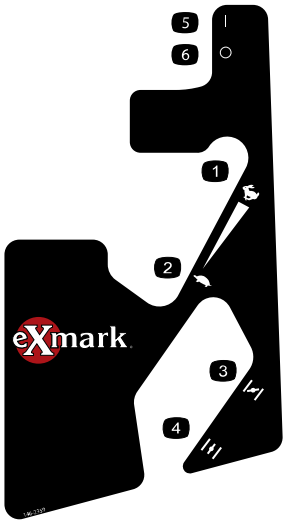

s_decal146-2359

1 Fast

2 Slow

3 Choke—cold starting aid

4 Choke—open

5 On

6 Off

Decal Part: 146-3140

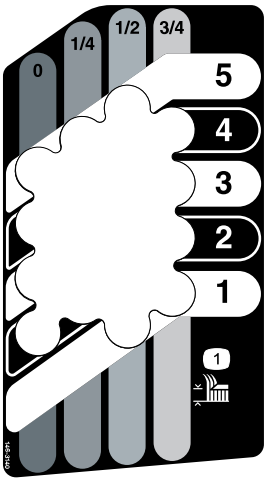

s_decal146-3140

(1) Height of cut

Decal Part: 146-3298

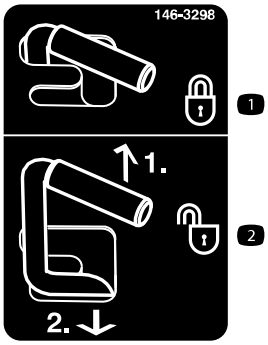

s_decal146-3298

(1) Lock—move the latch forward and down

(2) Unlock—pull the latch up and move it rearward

Decal Part: 146-3802

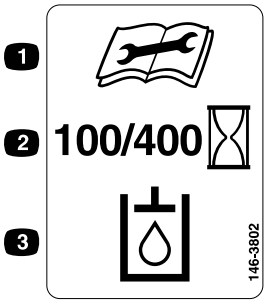

s_decal146-3802

(1) Read the instructions before servicing or performing maintenance.

(2) Time interval

(3) Hydraulic fluid

Decal Part: 146-3808

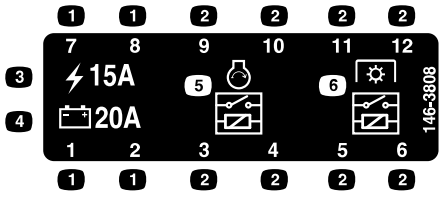

s_decal146-3808

1. Fuse location
2. Relay location
3. Main electrical power
4. Charge
5. Start relay
6. PTO relay

Decal Part: 146-5528

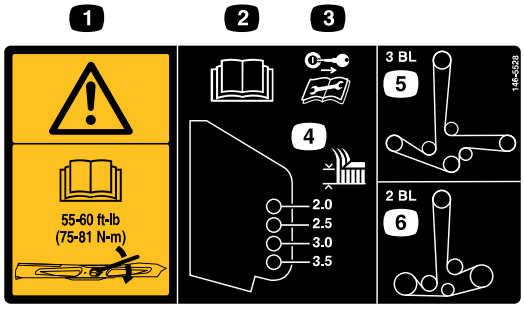

s_decal146-5528

1. Warning—read the *Operator's Manual* for instructions on torquing the blade bolt/nut to 55-60 ft-lb (75-81 N-m).
2. Read the *Operator's Manual*.
3. Remove the ignition key and read the instructions before servicing or performing maintenance.
4. Height of cut
5. Belt routing—3-blade cutting deck
6. Belt routing—2-blade cutting deck

Decal Part: 161-6620

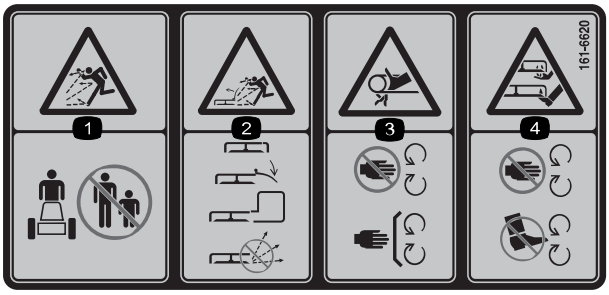

s_decal161-6620

1. Thrown object hazard—keep bystanders away from the machine.
2. Thrown object hazard, raised deflector—lower the deflector before operating the machine; always operate the machine with the deflector, discharge cover, or grass collection system in place; do not operate the machine with the discharge opening uncovered.
3. Entanglement hazard—keep away from moving parts; keep all guards and shields in place.
4. Severing hazard of hand or foot—keep hands and feet away from moving parts.

Decal Part: PTO Symbol

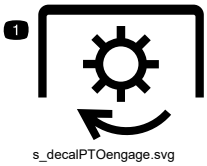

s_decalPTOengage.svg

1. PTO-engage

Product Overview

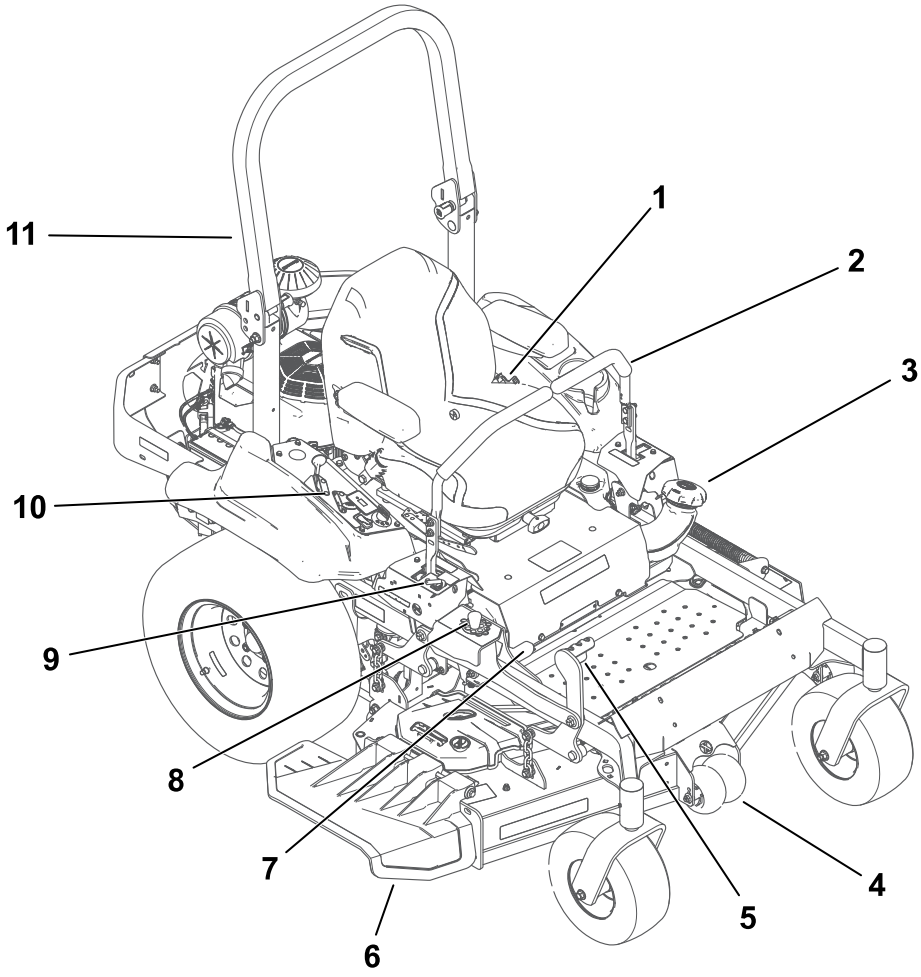

G565613

1. Seat belt
2. Motion-control lever
3. Fuel-tank cap
4. Anti-scalp roller
5. Deck-lift pedal
6. Deflector
7. Parking brake
8. Height-of-cut pin
9. Transport lock
10. Control panel
11. Roll bar

Control Panel

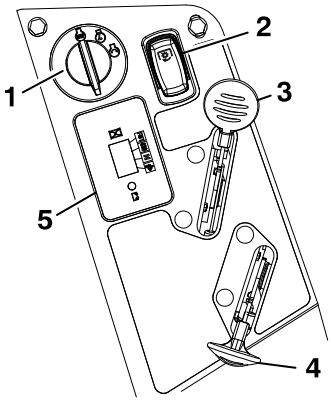

g449912S

1. Key switch
2. Blade-control switch (power takeoff)
3. Throttle control
4. Choke control
5. Hour meter

Key Switch

Use the key switch to start or shut off the engine.

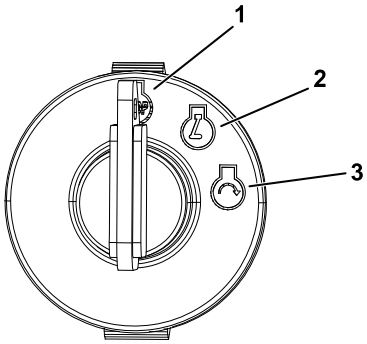

G375755s

1. Shut off the engine
2. Run the engine
3. Start engine

Throttle Control

The throttle controls the engine speed, and it has a continuous-variable setting from the SLOW to FAST position.

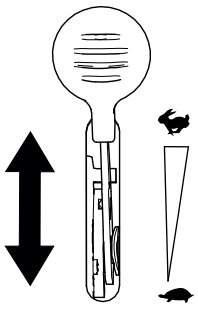

G563834

Blade-Control (PTO) Switch

The blade-control switch, represented by a power-takeoff (PTO) symbol, engages and disengages power to the mower blades.

Blade-Control (PTO) Switch (continued)

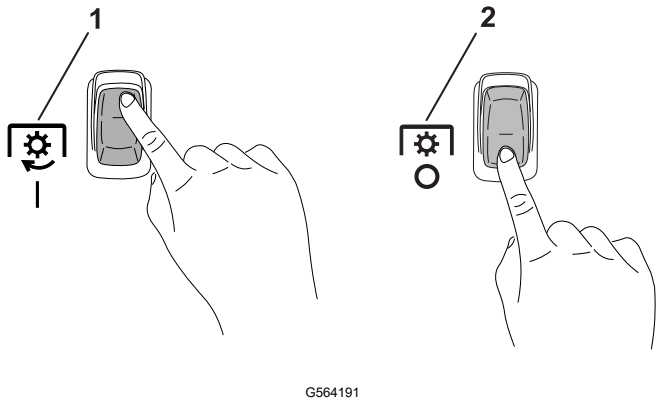

G564191

1 On (Engaged)
2 Off (Disengaged)

Choke Control

Use the choke control to aid in starting a cold engine.

Note: Do not run a warm engine with the choke in the ON position.

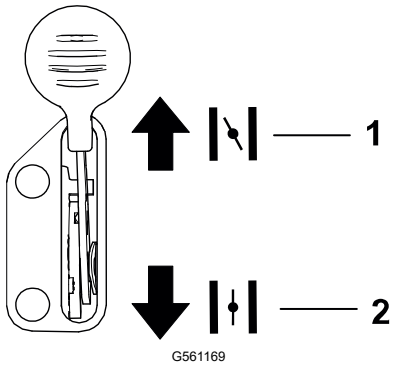

G561169

1 On
2 Off

Hour Meter

The hour meter records the number of hours the engine is running. Use these times for scheduling regular maintenance.

Parking Brake

Whenever you shut off the engine, engage the parking brake to prevent accidental movement of the machine.

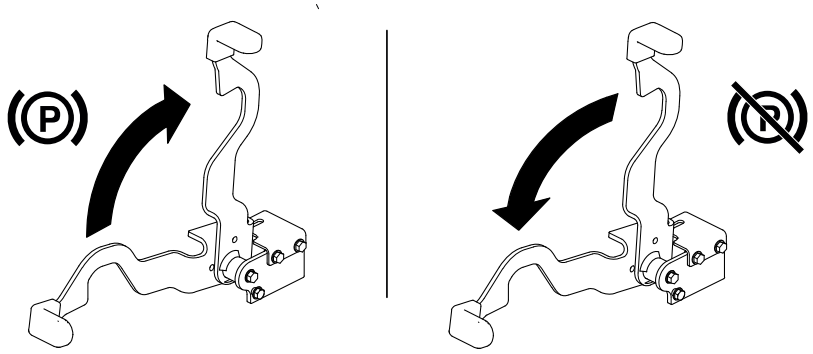

G564229

Motion-Control Levers

Use the motion-control levers to drive the machine forward, reverse, and turn either direction.

Neutral-Lock Position

Move the motion-control levers outward from the center to the NEUTRAL-LOCK position when exiting the machine. Always position the motion-control levers into the NEUTRAL-LOCK position when you stop the machine or leave it unattended.

Height-of-Cut Pin

The height-of-cut pin works with the foot pedal to lock the deck in a specific cutting height. Adjust the height of cut only when the machine is not moving.

Deck-Lift Pedal

Use the deck-lift pedal to briefly raise the mower deck from the seated position to avoid obstacles or when adjusting the height of cut.

Transport Lock

The transport lock automatically engages when raising the mower deck to the transport position using the deck-lift pedal.

Pull the handle up then rearward to release the lock and lower the deck to the height of cut.

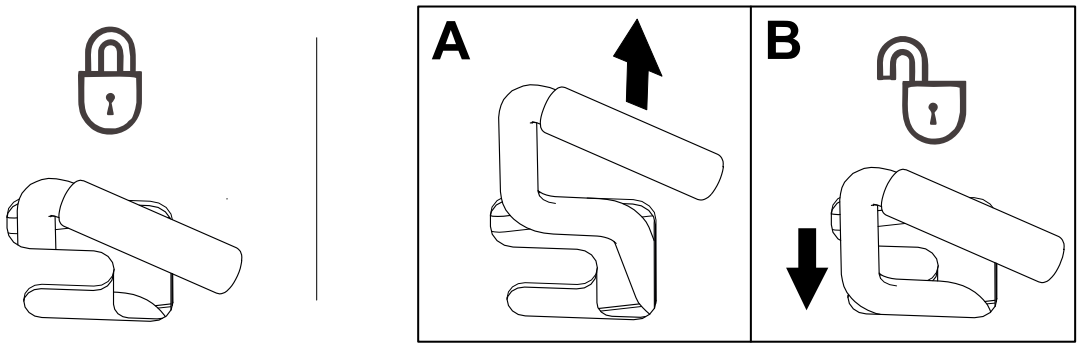

G565669

Fuel Gauge

The fuel gauge displays the amount of fuel in the tank.

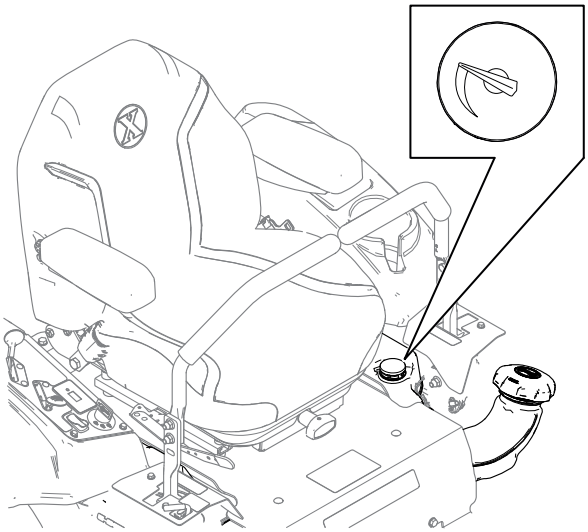

G565685

Specifications

Note: Specifications and design are subject to change without notice.

Dimensions

	48-inch Deck	60-inch Deck
Width without deck	130.8 cm (51.5 inches)	140.5 cm (55.3 inches)
Width with deflector up	137.4 cm (54.1 inches)	166.2 cm (65.4 inches)
Width with reflector down	155.5 cm (61.2 inches)	184.7 cm (72.7 inches)
Length with roll bar up	223.0 cm (87.8 inches)	214.9 cm (84.6 inches)

Dimensions (continued)

	48-inch Deck	60-inch Deck
Length with roll bar down	225.0 cm (88.6 inches)	217.0 cm (85.4 inches)
Wheel base (center of caster tire to center of drive tire)	135.9 cm (53.5 inches)	127.8 cm (50.3 inches)
Drive wheel tread width	106.2 cm (41.8 inches)	111.5 cm (43.9 inches)
Caster wheel tread width	79.0 cm (31.1 inches)	97.3 cm (38.3 inches)
Height with roll bar down	117.6 cm (46.3 inches)	117.6 cm (46.3 inches)
Height with roll bar up	178.1 cm (70.1 inches)	178.1 cm (70.1 inches)
Weight	461 kg (1017 lb)	482 to 496 kg (1062 lb to 1093 lb)

Required Accessory Weights:

Use the following table to determine if an extra weight kit is required for the machine when installing accessories.

	60-inch Deck
Sunshade Kit	Weight Kit 146-5925 or 116-1238

Tread Width:

Note: Measured center to center of tires, widthwise.

	60 inch Deck
Drive Wheels	103.4 cm (40.7 inches)
Caster Wheels	97.0 cm (8.2 inches)

Engine

- Engine Specifications: Refer to the engine owner's manual.
- Engine Oil Type: Engine-Oil Specifications
- Revolutions per minute:
  - Full Speed: 3700 ±50/-25 rpm (PTO not engaged)
  - Idle: 1750 ±100 rpm

Fuel System

Refer to Fuel Specifications

Electrical System

- Charging System: Flywheel Alternator

Electrical System (continued)

- Charging Capacity: 15 A
- Battery Type: BCI Group U1
- Recommended Minimum Battery CCA: 260 CCA
- Battery Voltage: 12 V
- Polarity: Negative Ground
- Fuses:
  - 20 A charging system fuse
  - 15 A main fuse

Safety Interlock System

- LCD indicators appear for the PTO, park brake, drive levers, and operator presence in the message display on the right side control panel.
- The PTO must be disengaged, the brake engaged, and motion control levers must be in the NEUTRAL-LOCK position to start the engine.

  Note: It is not necessary for the operator to be in the seat to start the machine.
- The operator must be in the seat when the PTO is engaged, the parking break is disengaged, or the motion-control levers are in the center, unlocked position; otherwise the engine will shut off.

Operator Controls

- Steering and Motion Control:

  Note: Motion-control levers are adjustable to 2 heights.
  - Separate levers, on each side of the console, control the speed and direction of travel of the respective drive wheels.
  - Steering is controlled by varying the position of the levers relative to each other.
  - Moving the motion-control levers outward (in slots) locks the drive system in neutral.
- PTO Engagement Switch: Engages the electric clutch (to drive belt) which engages mower blades.
- Parking Brake Lever: Engages the parking brake.
- Deck Height Adjustment Lever: Sets the cutting height to desired position.
- Deck Lift Pedal: Foot pedal that lifts the deck.
- Transport Lock:
  - Latching position: Automatically latches at the transport position.
  - Unlatching position: Deck does not latch at the transport position.

Seat

- Seat Type: Deluxe suspension with adjustable spring suspension, seat with high back, molded foam flip-up armrests, and integral safety switch

Seat (continued)

- Mounting: Adjustable fore and aft on seat tracks.
- Armrests: Molded flip-up armrests.
- Seat Safety Switch: Integrated seat switch. Time delay seat switch eliminates rough ground cut-outs.

Hydrostatic Ground Drive System

- Two unitized hydrostatic transmissions: Hydro Gear ZT 4400
- Hydraulic-Fluid Specifications: Refer to Hydraulic-Fluid Specifications
- Speeds:
  - 0-11 mph (17.7 km/hr)
  - Forward: 17.7 km/hr (11 mph) forward.
  - Reverse: 8 km/hr (5 mph) reverse.
- Drive-wheel release valves allow the machine to be moved when engine is not running.

Tires and Wheels

Drive Tires

Pneumatic (Air filled)		
Deck Size	48 inch	60 inch
Quantity	2	2
Tread	Super Turf	Super Turf
Size	24 x 9.50-12	24 x 12.00-12
Ply Rating	4	4
Pressure	Refer to	

Front Caster Tires

Pneumatic (Air filled)	
Deck Size	All
Quantity	2
Tread	Smooth
Size	13 x 6.50-12

Cutting Deck

	48-inch Deck	60-inch Deck
Cutting Width	122 cm (48 inches)	152 cm (60 inches)
Deck depth	14 cm (5.5 inches)	14 cm (5.5 inches)

Cutting Deck (continued)

	48-inch Deck	60-inch Deck
Blade size	62.2 cm (24.5 inches)	52.1 cm (20.5 inches)
Blade quantity	3	3
Electric clutch	“B” Section belt with self-tensioning idler	“B” Section belt with self-tensioning idler
Anti-scalp roller quantity[1]	3	4

1. Full floating deck is attached to out-front support frame. Anti-scalp rollers provide maximum turf protection. Deck design allows for bagging, mulching, or side discharge.

- Discharge: Side
- Blade Spindles: Solid steel spindles with 25 mm (0.98 inch) I.D. bearings.
- Deck Drive: “B” Section belt with self-tensioning idler.
- Cutting Height Adjustments:

  Foot-activated lever is used to adjust the cutting height from 3.8 cm (1-1/2 inches) to 12.7 cm (5 inches) in 6.4 mm (1/4 inch) increments.
- Mulching Kit: Optional

Bolt Location	Torque
Blade drive sheave mounting nut	176 to 217 N·m (130 to 160 ft-lb)
Blade mounting bolt (lubricate with anti-seize)	68 to 81 N·m (50 to 60 ft-lb)
Engine mounting bolts	37 to 45 N·m (27 to 33 ft-lb)
Wheel lug nuts	115 to 142 N·m (85 to 105 ft-lb)
Wheel Motor Mounting Bolts	129 to 156 N·m (95 to 115 ft-lb)
Rollover protection system (roll bar) 1/2 inch mounting bolts	90 to 113 N·m (67 to 83 ft-lb)
Clutch retaining bolt (secured with threadlocker)	75 to 81 N·m (55 to 60 ft-lb)
Motion Control Link to Hydro	20 to 26 N·m (175 to 225 in-lb)
Damper to Frame	15 to 19 N·m (135 to 165 in-lb)
Damper to Motion Control Assembly	9 to 11 N·m (80 to 100 in-lb)

Attachments/Accessories

A selection of Exmark approved attachments and accessories is available for use with the machine to enhance and expand its capabilities. Contact your Authorized Service Dealer or authorized Exmark distributor or go to www.Exmark.com for a list of all approved attachments and accessories.

To ensure optimum performance and continued safety certification of the machine, use only genuine Exmark replacement parts and accessories.

Before Operation

Before Operation Safety

- Do not allow children or untrained people to operate or service the machine. Local regulations may restrict the age of the operator. The owner is responsible for training all operators and mechanics.
- Inspect the area where you will use the machine and remove all objects that could be thrown or could interfere with the operation of the machine.
- Evaluate the terrain to determine the appropriate equipment and any attachments or accessories required to operate the machine properly and safely.
- Do not carry passengers on the machine.
- Become familiar with the safe operation of the equipment, operator controls, and safety signs.
- Check that operator-presence controls, safety switches, and guards are attached and working properly. Do not operate the machine unless they are functioning properly.
- Wear appropriate clothing, including eye protection; long pants; substantial, slip-resistant footwear; and hearing protection. Tie back long hair and do not wear loose clothing or loose jewelry.
- Do not operate the machine unless all guards and safety devices, such as the deflectors and the entire grass catcher, are in place and functioning properly. Replace worn or deteriorated parts when necessary.
- Shut off the engine, remove the key, and wait for all moving parts to stop before leaving the operator's position. Wait for the machine to cool before servicing, adjusting, fueling, cleaning, or storing it.

⚠ WARNING ⚠

Contacting the blade can result in serious personal injury.

When you shut off the engine, the blade(s) should stop. If not, stop using your machine immediately and contact an Authorized Service Dealer.

- Before mowing, inspect the machine to ensure that the cutting assemblies are working properly.
- Keep bystanders, particularly children, and pets away from the machine during operation. Shut off the machine and attachment(s) if anyone enters the area.

Before Operation Safety (continued)

Fuel Safety

- Fuel is extremely flammable and highly explosive. A fire or explosion from fuel can burn you and others and can damage property.
  - To prevent a static charge from igniting the fuel, place the container and/or machine directly on the ground before filling, not in a vehicle or on an object.
  - Fill the fuel tank outdoors on level ground, in an open area, and when the engine is cold. Wipe up any fuel that spills.
  - Do not handle fuel when smoking or around an open flame or sparks.
  - Do not remove the fuel cap or add fuel to the tank while the engine is running or hot.
  - If you spill fuel, do not attempt to start the engine. Avoid creating a source of ignition until the fuel vapors have dissipated.
  - Store fuel in an approved container and keep it out of the reach of children.
- Do not overfill the fuel tank. Replace the fuel cap and tighten it securely.
- In certain conditions during fueling, static electricity can be released, causing a spark that can ignite fuel vapors.
- Do not fill containers inside a vehicle or on a truck or trailer bed with a plastic liner. Always place containers on the ground and away from your vehicle before filling.
- Remove the equipment from the truck or trailer and refuel it while it is on the ground. If this is not possible, then refuel from a portable container rather than from a fuel-dispenser nozzle.
- Keep the fuel-dispenser nozzle in contact with the rim of the fuel tank or container opening at all times until fueling is complete. Do not use a nozzle lock-open device.
- Fuel is harmful or fatal if swallowed. Long-term exposure to vapors can cause serious injury and illness.
  - Avoid prolonged breathing of vapors.
  - Keep your hands and face away from the nozzle and the fuel-tank opening.
  - Keep fuel away from your eyes and skin.
- Clean up any spilled fuel.
- Do not store the machine or fuel container where there is an open flame, spark, or pilot light, such as on a water heater or on other appliances.
- Do not operate the machine without the entire exhaust system in place and in proper working condition.

Fuel

Fuel Specifications

Capacity	36 L (9.5 US gallons)
Type	Unleaded gasoline

Fuel (continued)

Minimum octane rating	87 (US) or 91 (research octane; outside the US)
Ethanol	No more than 10% by volume
Methanol	None
MTBE (methyl tertiary butyl ether)	Less than 15% by volume
Oil	Do not add to the fuel

Use only clean, fresh (no more than 30 days old), fuel from a reputable source.

IMPORTANT

To reduce starting problems, add fuel stabilizer/conditioner to fresh fuel as directed by the fuel-stabilizer/conditioner manufacturer.

Filling the Fuel Tank

1. Park the machine on a level surface.
2. Move the motion-control levers outward to the NEUTRAL-LOCK position and engage the parking brake.
3. Shut off the engine and remove the key.
4. Clean around the fuel-tank cap and fill the fuel tank.

IMPORTANT

Fill the fuel tank to the bottom of the filler neck. Do not fill the fuel tank completely full.

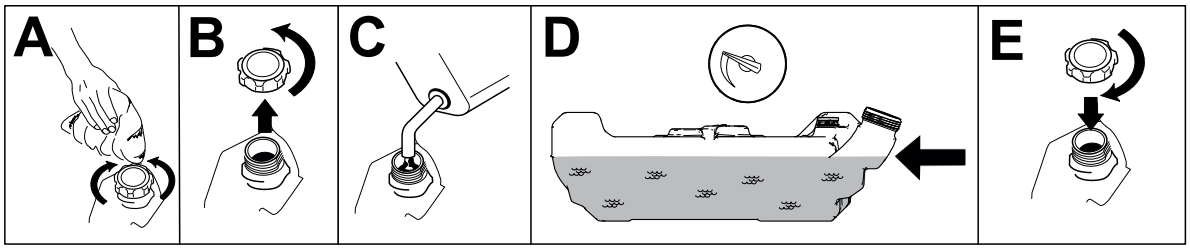

G565688

Using the Rollover-Protection System (ROPS)

WARNING

To avoid injury or death from rollover: keep the roll bar in the fully raised, locked position and use the seat belt.

Ensure that the seat is secured to the machine.

WARNING

There is no rollover protection when the roll bar is in the down position.

- **Lower the roll bar only when absolutely necessary.**
- **Do not wear the seat belt when the roll bar is in the down position.**
- **Drive slowly and carefully.**
- **Raise the roll bar as soon as clearance permits.**
- **Check carefully for overhead clearances (i.e., branches, doorways, electrical wires) before driving under any objects, and do not contact them.**

Lowering the Roll Bar

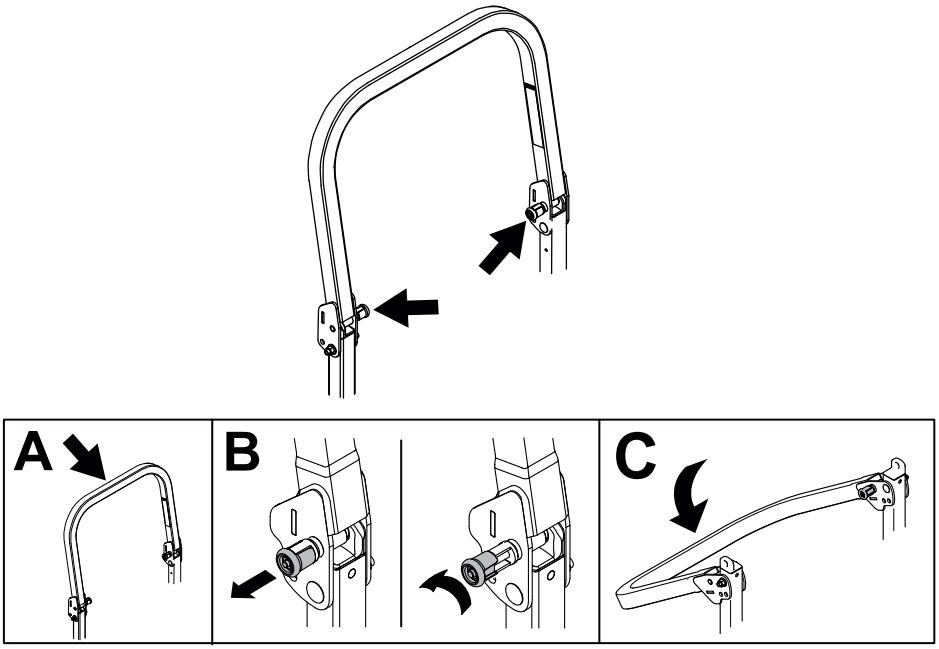

G565724

1. Apply forward pressure to the upper hoop of the roll bar.
2. Pull the knobs and rotate them 90° to hold them in the unlatched position.
3. Lower the roll bar.

Using the Rollover-Protection System (ROPS) (continued)

Raising the Roll Bar

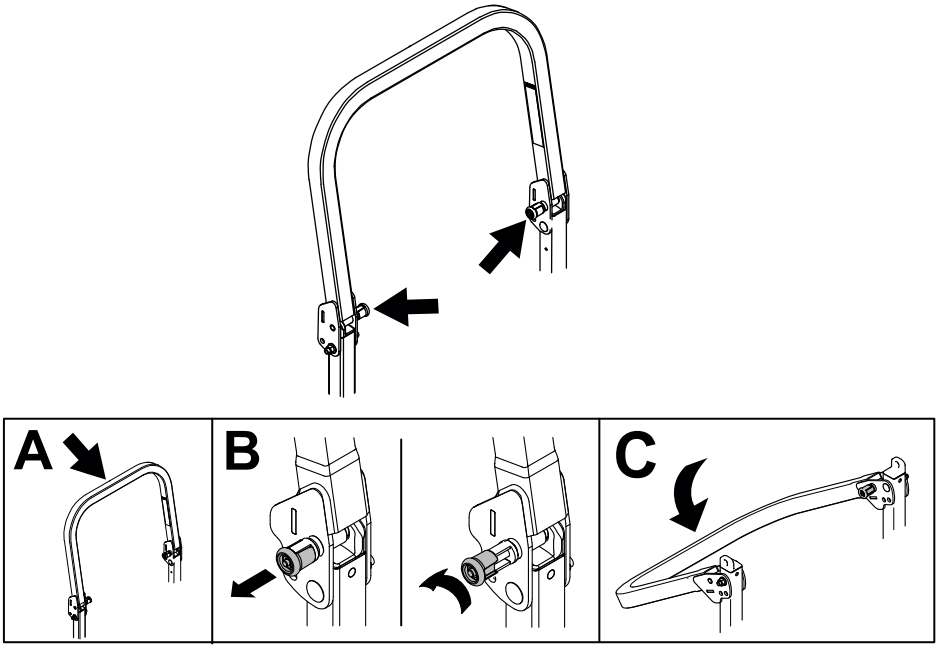

G565724

1. Raise the roll bar.
2. Rotate the knobs 90° so that the tabs interlock partially.
3. Apply forward pressure to the upper hoop of the roll bar.
4. Verify that the knobs return to the completely latched position.

   Note: You may need to push the upper hoop forward or pull it rear to fully engage both knobs.

IMPORTANT

Do not operate the machine with partially engaged knobs.

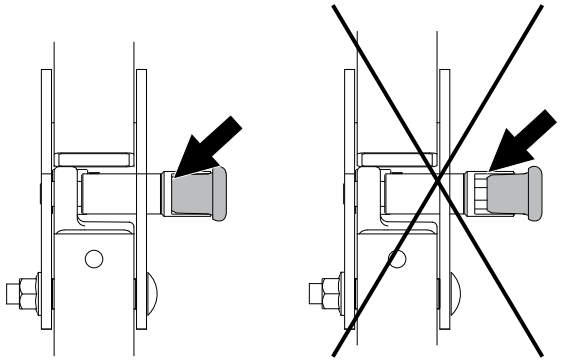

G565725

Performing Daily Maintenance

Before starting the machine each day, perform the Each Use/Daily procedures listed in the Maintenance Schedule.

Break-In Time

New engines take time to develop full power. Mower decks and drive systems have higher friction when new, placing additional load on the engine. Allow 40 to 50 hours of break-in time for new machines to develop full power and best performance.

Safety-Interlock System

The safety-interlock system is designed to prevent the engine from starting unless all of the following occurs:

- The parking brake is engaged.
- The blade-control switch (PTO) is disengaged.
- The motion-control levers are in the NEUTRAL-LOCK position.

⚠ WARNING ⚠

If the safety-interlock switches are disconnected or damaged, the machine could operate unexpectedly, causing personal injury.

- **Do not tamper with the interlock switches.**
- **Check the operation of the interlock switches daily and replace any damaged switches before operating the machine.**

The safety-interlock system also is designed to shut off the engine when the motion-control levers are moved from the NEUTRAL-LOCK position with the parking brake engaged or if you rise from the seat when the PTO is engaged.

The hour meter has indicators to notify the user when the interlock component is in the safe to start position (1). When the component is in the correct position, an indicator displays on the screen.

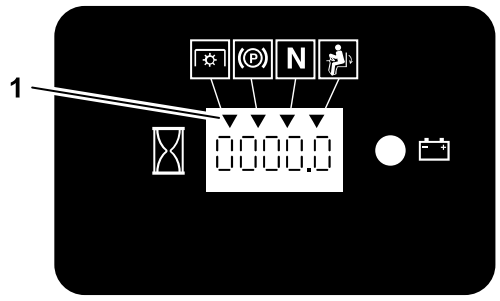

g187670S

Safety-Interlock System (continued)

Testing the Safety-Interlock System

IMPORTANT

Ensure that the operator safety mechanisms are connected and in proper operating condition prior to use. If the machine does not pass any of these tests, do not operate, and contact an Authorized Service Dealer.

Note: To prevent engine cutouts on rough terrain, the seat has a 1/2-second time delay before the engine begins to shut off.

Refer to the following tables to test the safety interlocks.

Normal Engine Starting

Parking Brake	PTO	Motion-Control Levers	Operator	Outcome
Engaged 	Disengaged (Blades) 	NEUTRAL-LOCK Position (both levers out) 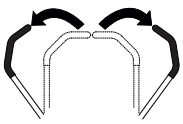	In or out of the seat  	Starter should crank 

Safety-Interlock System (continued)

Note: In the Engine Starting Circuit table, the state of system item that is **bold** is being checked in each scenario.

Engine-Starting Circuit

Parking Brake	PTO (Blades)	Motion-Control Levers	Operator	Outcome
Engaged 	Disengaged 	**Right lever moved in. Left lever moved in.** 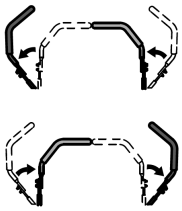	In the seat 	Starter must not crank 
Disengaged 	Disengaged 	NEUTRAL-LOCK Position (both levers out) 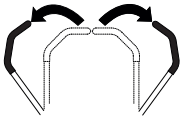	In the seat 	Starter must not crank 
Engaged 	**Engaged** 	NEUTRAL-LOCK Position (both levers out) 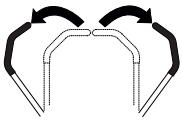	In the seat 	Starter must not crank 

Safety-Interlock System (continued)

Note: In the Shutdown Circuit table, the state of system item that is **bold** is being checked in each scenario.

Shutdown Circuit

Engine	Parking Brake	PTO (Blades)	Motion-Control Levers	Operator	Outcome
Running idle (1/3 throttle) 	**Disengaged** 	Disengaged 	NEUTRAL-LOCK Position (both levers out) 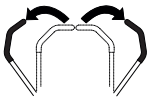	Begin to exit the seat without getting off 	Engine must begin shutting down within 1 second 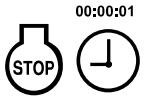
Running idle (1/3 throttle) 	Disengaged 	**Engaged** 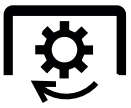	NEUTRAL-LOCK Position (both levers out) 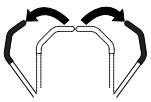	Begin to exit the seat without getting off 	Engine must begin shutting down within 1 second 
Running idle (1/3 throttle) 	Engaged 	Disengaged 	**Right lever moved in. Left lever moved in.** 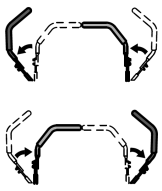	In the seat 	Engine must begin shutting down within 1 second 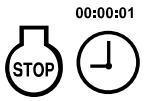

Safety-Interlock System (continued)

Shutdown Circuit (continued)

Engine	Parking Brake	PTO (Blades)	Motion-Control Levers	Operator	Outcome
Running idle (1/3 throttle) 	Engaged 	**Engaged** 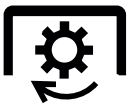	NEUTRAL-LOCK Position (both levers out) 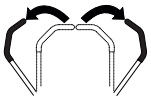	**Begin to exit the seat without getting off** 	Engine must begin shutting down within 1 second 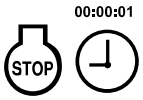

Positioning the Seat

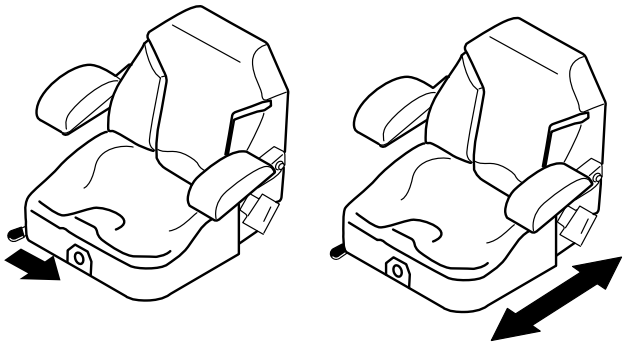

g019754s

Adjusting the Seat Suspension

Rotate the knob to adjust the suspension.

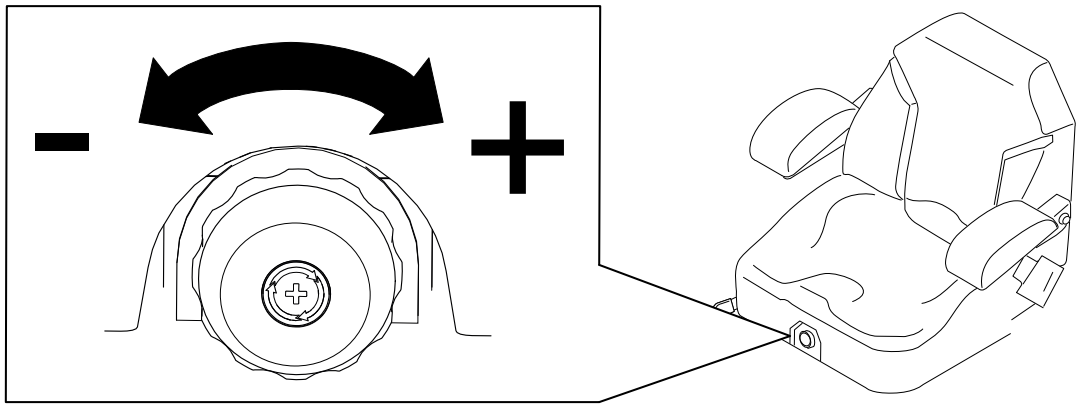

G559793

Adjusting the Motion-Control Lever Height

Adjust the motion-control levers higher or lower for your comfort.

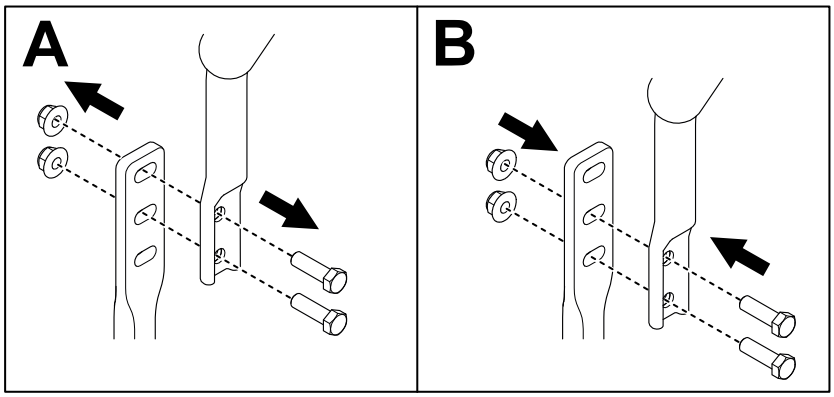

G565759

Adjusting the Motion-Control Lever Tilt

Adjust the motion-control levers forward or rearward for your comfort.

1. Loosen the upper bolt.
2. Loosen the lower bolt enough to pivot the control lever forward or rearward.
3. Tighten both bolts.
4. Repeat the adjustment for the other control lever.

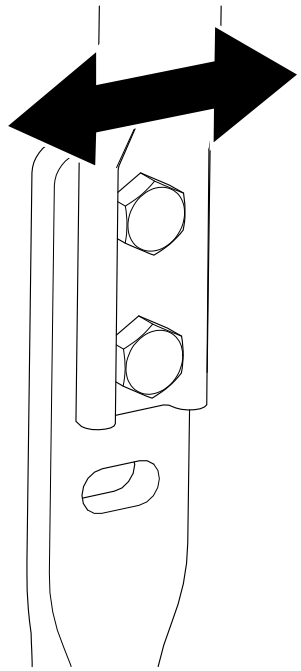

G565760

During Operation

During Operation Safety

- The owner/operator can prevent and is responsible for accidents that may cause personal injury or property damage.
- Use your full attention while operating the machine. Do not engage in any activity that causes distractions; otherwise, injury or property damage may occur.
- Do not operate the machine while ill, tired, or under the influence of alcohol or drugs.
- Do not operate the machine unless all guards and safety devices, such as the deflectors and the entire grass catcher, are in place and functioning properly. Replace worn or deteriorated parts with genuine Exmark parts when necessary.
- Operating engine parts, especially the muffler, can become extremely hot. Severe burns can occur on contact and debris, such as leaves, grass, brush, etc. can catch fire. Keep the engine area free from debris and excessive oil and grease.
- Operate the engine only in well-ventilated areas. Exhaust gases contain carbon monoxide, which is lethal if inhaled.
- Operate the machine only in good visibility and appropriate weather conditions. Do not operate the machine when there is the risk of lightning.
- Start the engine with your feet well away from the blades.
- Keep your hands and feet away from moving parts. Keep clear of the discharge opening.
- Keep away from holes, ruts, bumps, rocks, and other hazards. Use care when approaching blind corners, shrubs, trees, tall grass or other objects that may hide obstacles or obscure your view.
- Do not mow with the discharge deflector raised, removed, or altered unless there is a grass-collection system or mulch kit in place and working properly.
- Do not mow in reverse unless it is absolutely necessary. Always look down and behind you before moving the machine in reverse.
- Stop the blades whenever you are not mowing. Slow down the machine, and use caution when crossing surfaces other than grass or when transporting the machine to and from the operating area.
- Be aware of the mower discharge path and direct the discharge away from others. Avoid discharging material against a wall or obstruction because the material may ricochet back toward you.
- If the machine strikes an object or starts to vibrate, immediately shut off the engine, remove the key, and wait for all moving parts to stop before examining the machine for damage. Make all necessary repairs before resuming operation.
- Slow down and use caution when making turns and crossing roads and sidewalks with the machine. Always yield the right-of-way.
- Never leave a running machine unattended.
- Before you leave the operating position, do the following:
  - Park the machine on a level surface.
  - Disengage the power takeoff and lower the attachments.

During Operation Safety (continued)

  - Engage the parking brake.
  - Shut off the engine and remove the key.
  - Wait for all moving parts to stop.

- Never carry children on the machine.
- Do not carry children on the machine, even when the blades are not moving. Children could fall off and be seriously injured or prevent you from safely operating the machine. Children who have been given rides in the past could appear in the operating area without warning and be run over or backed over by the machine.
- Children are often attracted to the machine and the mowing activity. Never assume that children will remain where you last saw them.
- Keep children out of the operating area and under the watchful care of a responsible adult other than the operator.
- Be alert and shut off the machine if children enter the operating area.
- Before backing up or turning the machine, look down and all around for small children.
- Do not use the machine as a towing vehicle unless it has a hitch installed. Attach towed equipment to the machine only at the hitch point.
- Use only accessories and attachments approved by Exmark Manufacturing.

Rollover Protection System (ROPS) Safety

- The ROPS is an integral safety device. Do not remove any of the ROPS components from the machine.
- Ensure that the seat belt is attached and that you can release it quickly in an emergency.
- Keep the roll bar in the fully raised and locked position and always wear your seat belt whenever the roll bar is up.
- Check carefully for overhead objects before you drive under them, and do not contact them.
- Replace damaged ROPS components. Do not repair or alter them.
- There is no rollover protection when the roll bar is down.
- Wheels dropping over edges, over steep banks, or into water can cause a rollover, which may result in serious injury or death.
- Do not wear the seat belt when the roll bar is down.
- Lower the roll bar only when absolutely necessary; raise it as soon as clearance permits.
- In the event of a rollover, take the machine to an Authorized Service Dealer to inspect the ROPS.
- Use only accessories and attachments for the ROPS approved by Exmark Manufacturing.

Slope Safety

- Slopes are a major factor related to loss of control and rollover accidents, which can result in severe injury or death. The operator is responsible for safe slope operation.

During Operation Safety (continued)

Operating the machine on any slope requires extra caution. Before using the machine on a slope, do the following:

- Review and understand the slope instructions in the manual and on the machine.
- Use an angle indicator to determine the approximate slope angle of the area.
- Never operate on slopes greater than 15°.
- Evaluate the site conditions of the day to determine if the slope is safe for machine operation. Use common sense and good judgment when performing this evaluation. Changes in the terrain, such as moisture, can quickly affect the operation of the machine on a slope.

- Identify hazards at the base of the slope. Do not operate the machine near drop-offs, ditches, embankments, water, or other hazards. The machine could suddenly roll over if a wheel goes over the edge or the edge collapses. Keep a safe distance (twice the width of the machine) between the machine and any hazard. Use a walk-behind machine or a hand trimmer to mow the grass in these areas.

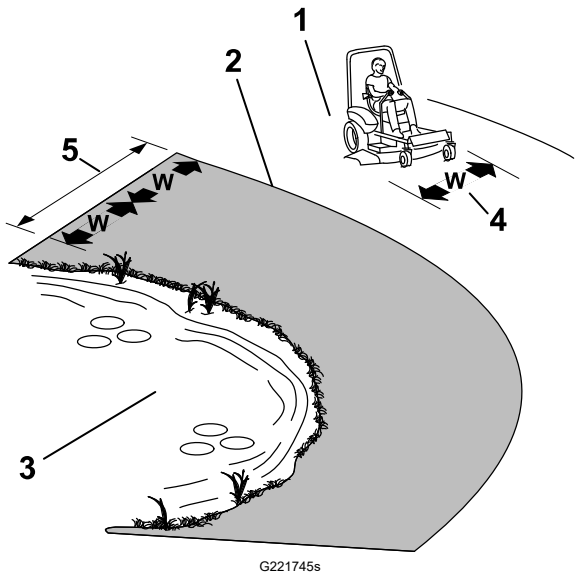

G221745s

(1) Safe Zone—use the machine here on slopes less than 15° or flat areas.

(2) Danger Zone—use a walk-behind mower and/or a hand trimmer on slopes greater than 15° and near drop-offs or water.

(3) Water

(4) W = Width of the machine

(5) Keep a safe distance (twice the width of the machine) between the machine and any hazard.

- Avoid starting, stopping, or turning the machine on slopes. Avoid making sudden changes in speed or direction; turn slowly and gradually.
- Do not operate a machine under any conditions where traction, steering, or stability is in question. Be aware that operating the machine on wet grass, across slopes, or downhill may cause the machine to lose traction. Loss of traction to the drive wheels may result in sliding and a loss of braking and steering. The machine can slide even if the drive wheels are stopped.
- Remove or mark obstacles such as ditches, holes, ruts, bumps, rocks, or other hidden hazards. Tall grass can hide obstacles. Uneven terrain could overturn the machine.
- Use extra care while operating with accessories or attachments, such as grass-collection systems. These can change the stability of the machine and cause a loss of control. Follow directions for counterweights.
- If possible, keep the deck lowered to the ground while operating on slopes. Raising the deck while operating on slopes can cause the machine to become unstable.

Entering the Operator's Position

Use the mower deck as a step (1) to get into the operator's position

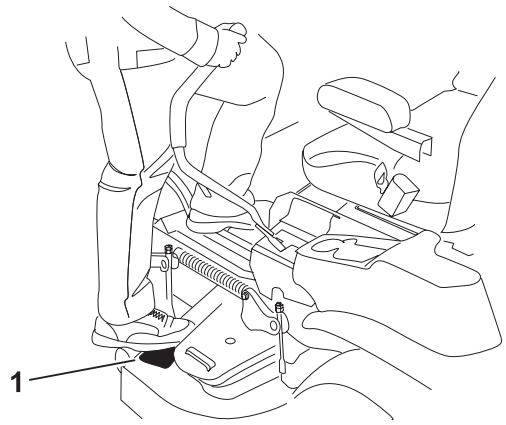

g029797S

Starting the Engine

Start the engine as shown.

Note: A warm or hot engine may not require choking.

IMPORTANT

Do not engage the starter for more than 5 seconds at a time, otherwise you can damage the starter motor. If the engine fails to start, wait 15 seconds before operating the engine starter again.

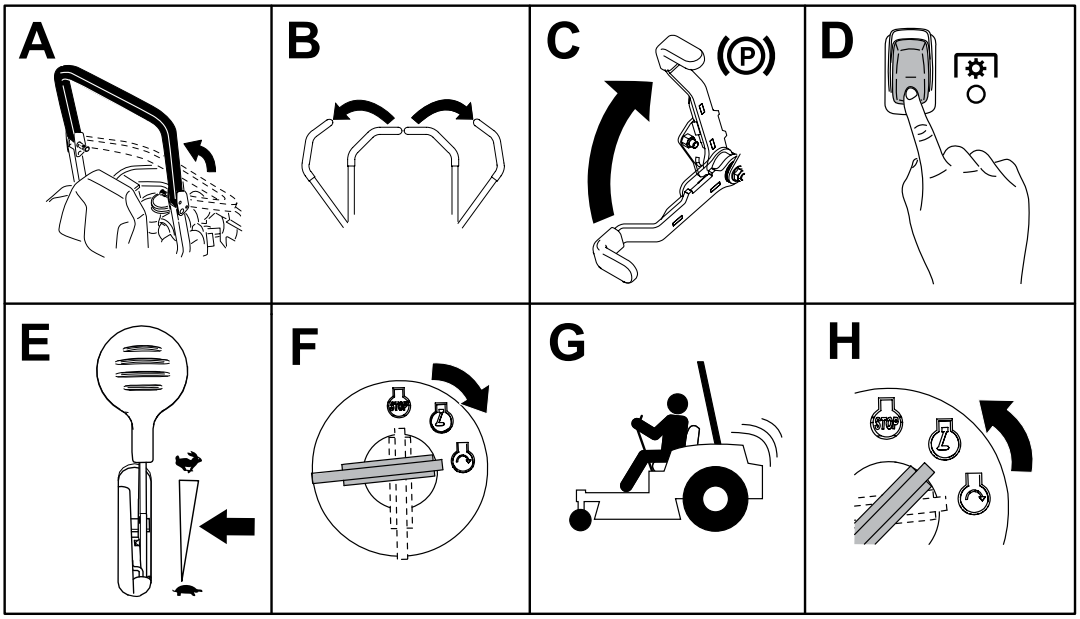

G565774

Shutting Off the Engine

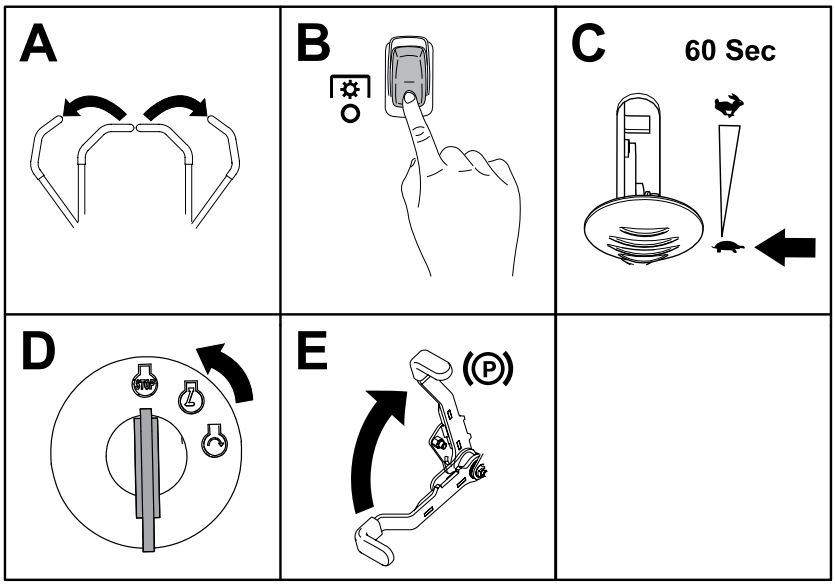

1. Move the motion-control levers outward to the NEUTRAL-LOCK position and engage the parking brake.
2. Disengage the blades by moving the blade-control switch to the OFF position.
3. Move the throttle control to the SLOW position and let the engine idle for 1 minute.
4. Turn the key to the OFF position and remove the key.

⚠ CAUTION ⚠

Children or bystanders may be injured if they move or attempt to operate the machine while it is unattended.

Always remove the key and engage the parking brake when leaving the machine unattended.

---

5. Engage the parking brake.

Driving the Machine

⚠ CAUTION ⚠

Positioning one lever too far in front of the other causes the machine to spin very rapidly. As a result, you may lose control of the machine, causing personal injury to you and damage to the machine.

Slow down the machine before making sharp turns.

Driving the Machine (continued)

The drive wheels turn independently, powered by motors on each axle. You can turn 1 side in reverse while you turn the other forward, causing the machine to spin rather than turn. This greatly improves the machine maneuverability but may require some time for you to adapt to how it moves.

1. Move the motion-control levers down to the center, unlocked position.

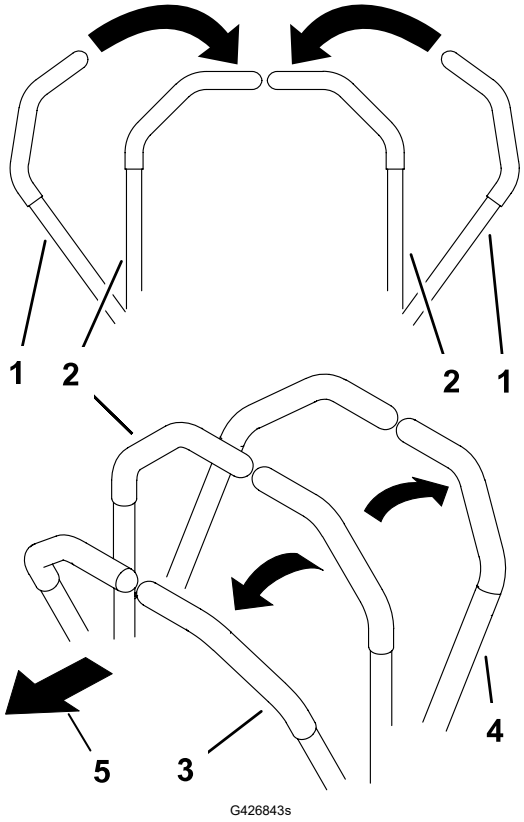

G426843s

1. Motion-control levers—NEUTRAL-LOCK position
2. Center, unlocked position
3. Forward
4. Reverse
5. Front of the machine

Driving the Machine (continued)

2. Slowly push the motion-control levers forward or rearward. Move 1 lever farther than the other lever to turn.

   Note: The farther you move the motion-control levers, the faster the machine moves in that direction.

3. To stop, pull the motion-control levers back to the NEUTRAL position.

   Note: You can use the parking brake to stop the machine in emergency situations or when a machine fault disables the traction controls.

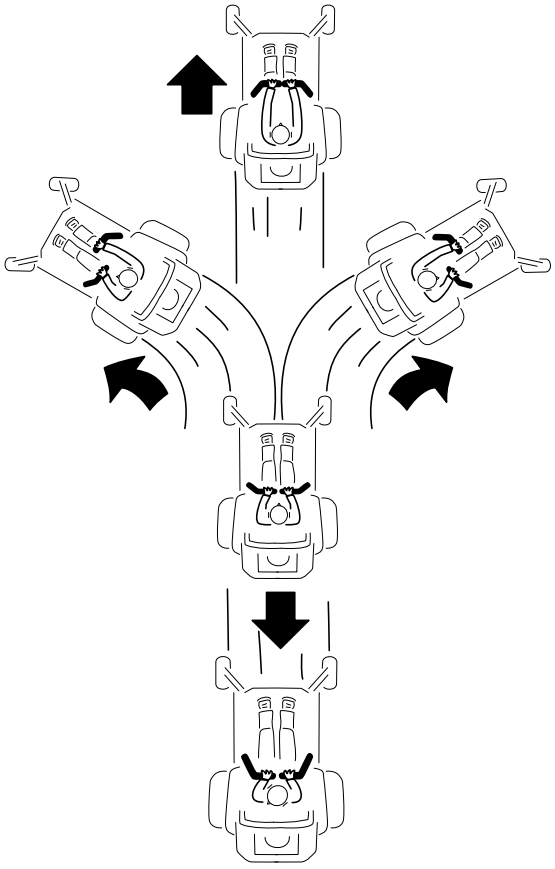

G397314s

Operating the Mower Blade-Control Switch (PTO)

⚠ DANGER ⚠

The rotating blades under the mower deck are dangerous. Blade contact will cause serious injury or death.

Do not put your hands or feet under the mower or mower deck when the blades are engaged.

⚠ DANGER ⚠

An uncovered discharge opening allows objects to be thrown toward you or bystanders. Also, contact with the blade could occur. Thrown objects or blade contact will cause serious injury or death.

Do not operate the mower with the discharge deflector raised, removed, or altered unless a grass collection system or mulch kit is in place and working properly.

---

1. Move the throttle control to the FAST position.

Operating the Mower Blade-Control Switch (PTO) (continued)

2. Engage the blade-control switch.

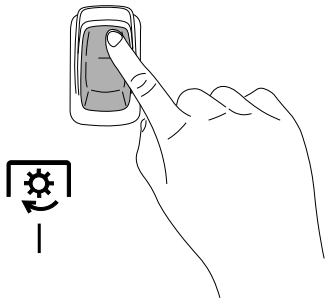

G450387

3. Mow as desired.
4. Disengage the blade-control switch.

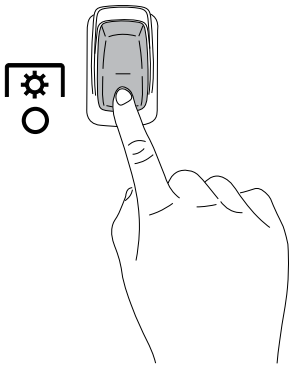

G450388

Side Discharge

The hinged grass deflector disperses clippings to the side and down toward the turf.

⚠ DANGER ⚠

Without the grass deflector, discharge cover, or complete grass catcher assembly mounted in place, you and bystanders are exposed to blade contact and thrown debris. Contact with rotating mower blade(s) and thrown debris will cause injury or death.

- **Do not remove the grass deflector from the machine, because the grass deflector routes material down toward the turf. If the grass deflector is ever damaged, replace it immediately.**
- **Never put your hands or feet under the mower.**
- **Never try to clear the discharge area or mower blades unless the power takeoff (PTO) is off. Rotate the key to the OFF position and remove the key.**

Adjusting the Height of Cut

You can adjust the height of cut from 3.8 cm to 14.0 cm (1-1/2 to 5-1/2 inches) in 6.4 mm (1/4 inch) increments.

1. Stop the machine and move the motion control levers into the NEUTRAL-LOCK position.
2. Disengage the PTO and raise and lock the deck to the transport position ①.
3. Push the deck-lift pedal ③ with your foot to raise the mower deck.
4. Remove the pin ② from the height-of-cut bracket.
5. Insert the pin into the hole corresponding to the desired height of cut ②.
6. Lower the deck slowly until the lever contacts the pin.

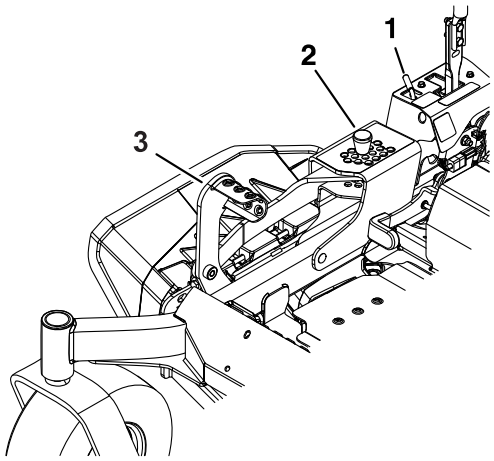

G565800

Adjusting the Anti-Scalp Rollers

Whenever you change the height of cut, adjust the height of the anti-scalp rollers.

1. Park the machine on a level surface, disengage the blade-control switch (PTO), and engage the parking brake.
2. Shut off the machine, remove the key, and wait for all moving parts to stop before leaving the operating position.
3. Adjust the anti-scalp rollers to match the closest height-of-cut position.

   Note: Adjust the anti-scalp rollers so that the rollers do not touch the ground in normal, flat mowing areas.

Adjusting the Anti-Scalp Rollers (continued)

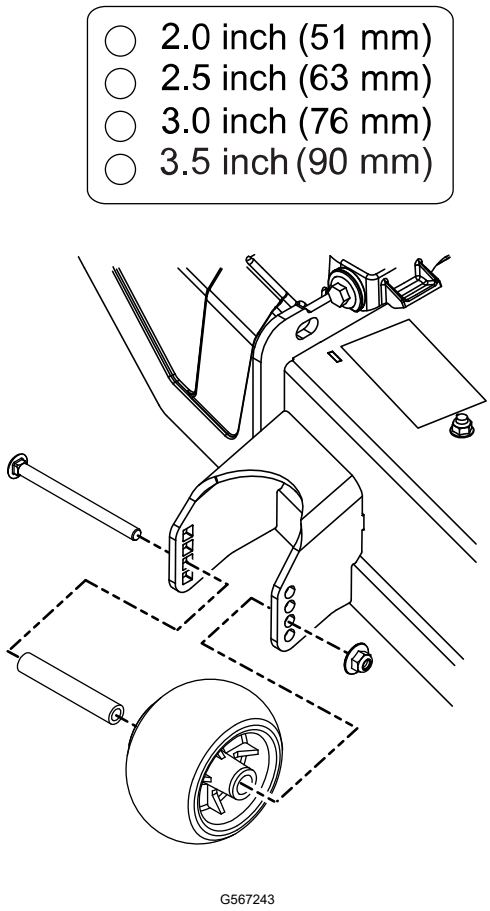

G567243

Operating Tips

Maximize Air Circulation

For best mowing and maximum air circulation, operate the engine at the FAST position. Air circulation is required to thoroughly cut grass clippings, so do not set the height of cut so low as to totally surround the mower deck in uncut grass. Always try to have 1 side of the mower deck free from uncut grass, which allows air to be drawn into the mower deck.

Avoid Cutting Too Low

When mowing uneven ground, raise the cutting height to slightly higher than normal to avoid scalping the turf. However, the cutting height used in the past is generally the best one to use. When cutting grass longer than 15 cm (6 inches) tall, you may want to cut the lawn twice to ensure an acceptable quality of cut.

Cut a Third of the Grass Blade

It is best to cut only about a third of the grass blade. Cutting more than that is not recommended unless grass is sparse, or it is late fall when grass grows more slowly.

Operating Tips (continued)

Alternate the Mowing Direction

Alternate the mowing direction to keep the grass standing straight. This also helps disperse clippings, which enhances decomposition and fertilization.

Mowing Frequency

Grass grows at different rates at different times of the year. To maintain the same cutting height, mow more often in early spring. As the grass growth rate slows in mid summer, mow less frequently. If you cannot mow for an extended period, first mow at a high cutting height, then mow again 2 days later at a lower height setting.

Mow at Slower Ground Speeds

In certain conditions, mowing at a slower ground speed can improve cut quality.

Avoid Grass Clumps

If you must stop driving forward while mowing, a clump of grass clippings may drop onto your lawn. To avoid this, move onto a previously cut area with the blades engaged or disengage the mower deck while moving forward.

Keep the Underside of the Mower Deck Clean

Clean clippings and dirt from the underside of the mower deck after each use. Grass and dirt build-up will eventually decrease the cutting quality.

Maintain the Blades

Maintain a sharp blade throughout the cutting season because a sharp blade cuts cleanly without tearing or shredding the grass blades. Tearing and shredding turns grass brown at the edges, which slows growth and increases the chance of disease. Check the mower blades after each use for sharpness, and for any wear or damage. File down any nicks and sharpen the blades as necessary. If a blade is damaged or worn, replace it.

After Operation

After Operation Safety

- Park the machine on a level surface, disengage the drives, engage the parking brake, shut off the engine, remove the key, and wait for all moving parts to stop before leaving the operator’s position.
- Wait for the machine to cool before servicing, adjusting, fueling, cleaning, or storing it.
- Clean grass, leaves, excessive grease and oil, and other debris from the mower deck, muffler, drives, grass catcher, and engine area to help prevent fires.
- Close the fuel-shutoff valve (if equipped) before storing or transporting the machine.

After Operation Safety (continued)

- Use full-width ramps for loading the machine into a trailer or truck.
- Tie the machine down securely using straps, chains, cable, or ropes. Both front and rear straps should be directed down and outward from the machine.

Using the Fuel-Shutoff Valve

Close the fuel-shutoff valve for transport, maintenance, and storage.

Note: Ensure that the fuel-shutoff valve is open when starting the engine.

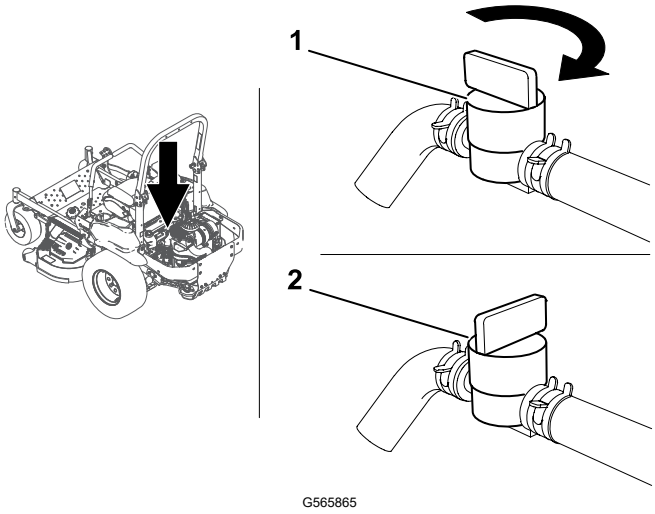

1 ON position

2 OFF position

Cleaning the Machine

Clean the machine after each use.

1. Park the machine on a level surface, disengage the blade-control switch, move the motion-control levers outward to the NEUTRAL-LOCK position, and engage the parking brake.
2. Shut off the engine, remove the key, and wait for all moving parts to stop before leaving the operating position. Allow the machine to cool before servicing, adjusting, fueling, cleaning, or storing.
3. Clean grass and debris from the cutting unit, muffler, drives, grass catcher, and engine. Use compressed air when possible.

IMPORTANT

You can wash the machine with a mild detergent and water. Do not pressure wash the machine. Avoid excessive use of water, especially near the control panel, under the seat, and around the engine, hydraulic pumps, and motors.

Hauling the Machine

Use a heavy-duty trailer or truck to haul the machine. Use a full-width ramp. Ensure that the trailer or truck has all the necessary brakes, lighting, and marking as required by law. Please carefully read all the safety instructions. Knowing this information could help you or bystanders avoid injury. Refer to your local ordinances for trailer and tie-down requirements.

⚠ WARNING ⚠

Driving on the street or roadway without turn signals, lights, reflective markings, or a slow-moving-vehicle emblem is dangerous and can lead to accidents causing personal injury.

Do not drive the machine on a public street or roadway.

Trailer Requirements

⚠ WARNING ⚠

Loading a machine onto a trailer or truck increases the possibility of tip-over and could cause serious injury or death.

- **Use only a full-width ramp; do not use individual ramps for each side of the machine.**
- **Do not exceed a 15-degree angle between the ramp and the ground or between the ramp and the trailer or truck.**
- **Ensure that the length of ramp is at least 4 times as long as the height of the trailer or truck bed to the ground.**

Hauling the Machine (continued)

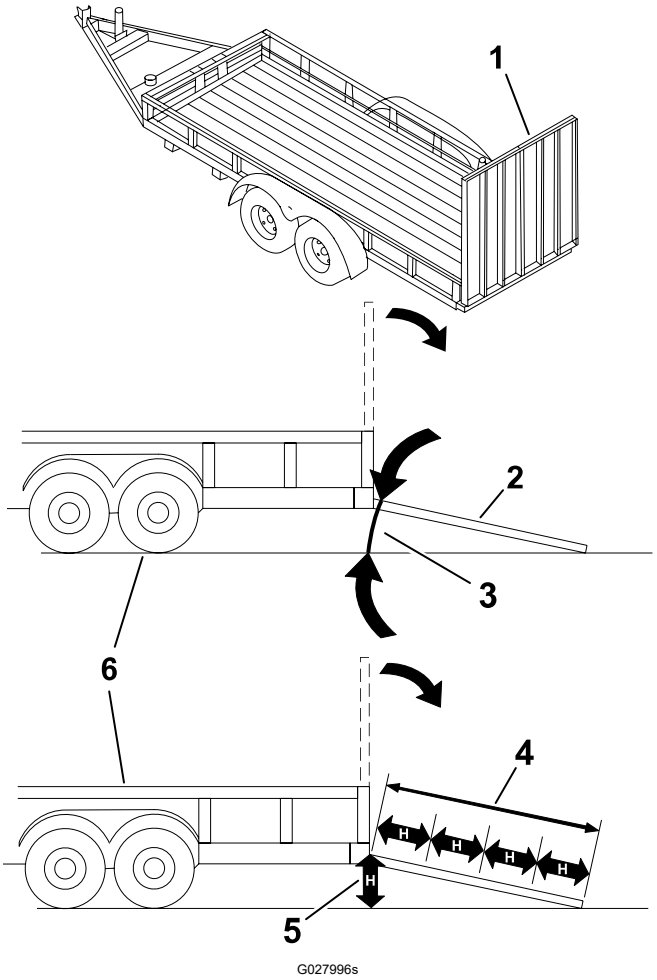

1 Full-width ramp(s) in stowed position

2 Side view of full-width ramp in loading position

3 Not greater than 15 degrees

4 Ramp is at least 4 times as long as the height of the trailer or truck bed to the ground

5 H = height of the trailer or truck bed to the ground

6 Trailer

Hauling the Machine (continued)

Loading the Machine

⚠ WARNING ⚠

Loading a machine onto a trailer or truck increases the possibility of tip-over and could cause serious injury or death.

- **Use extreme caution when operating a machine on a ramp.**
- **Back the machine up the ramp and drive it forward down the ramp.**
- **Avoid sudden acceleration or deceleration while driving the machine on a ramp as this could cause a loss of control or a tip-over situation.**

---

1. If using a trailer, connect it to the towing vehicle and connect the safety chains.
2. If applicable, connect the trailer brakes.
3. Lower the ramp, ensuring that the angle between the ramp and the ground does not exceed 15 degrees.
4. Back the machine up the ramp.
5. Shut off the engine, remove the key, move the motion-control levers outward to the NEUTRAL-LOCK position, and engage the parking brake.
6. Close the fuel-shutoff valve.
7. Tie down the machine using straps, chains, cable, or ropes. Refer to local regulations for tie-down requirements.

   Note: Direct the straps down and away from the machine.

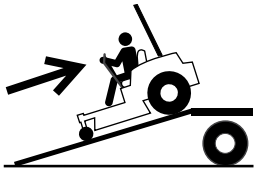

G414594

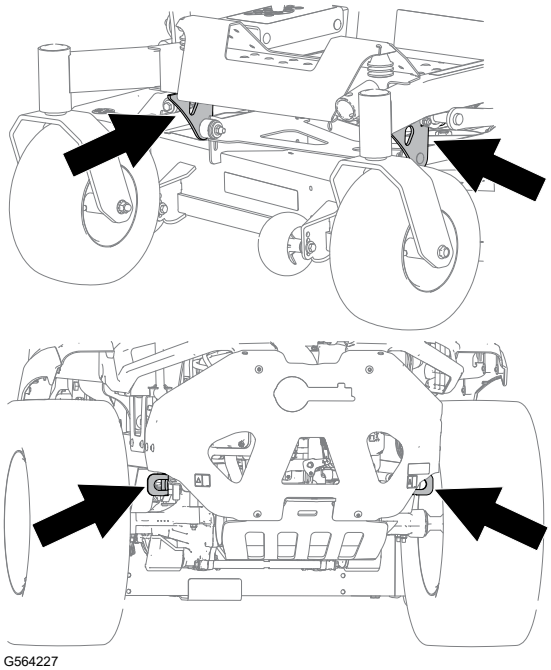

G564227

Hauling the Machine (continued)

Unloading the Machine

1. Lower the ramp, ensuring that the angle between the ramp and the ground does not exceed 15 degrees.
2. Drive the machine forward down the ramp.

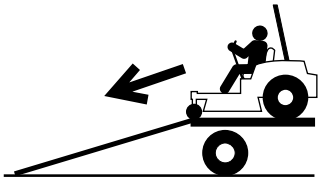

G414595

Maintenance Safety

- If you leave the key in the switch, someone could accidently start the engine and seriously injure you or other bystanders. Remove the key from the switch before you perform any maintenance.
- Before you leave the operator's position, do the following:
  - Park the machine on a level surface.
  - Disengage the drives.
  - Engage the parking brake.
  - Shut off the engine and remove the key.
  - Wait for the machine to cool before performing maintenance.
- Do not allow untrained personnel to service the machine.
- Keep your hands and feet away from moving parts or hot surfaces. If possible, do not make adjustments with the engine running.
- Keep all guards, shields, switches, and all safety devices in place and in proper working condition. Frequently check for worn or deteriorating components and replace them with genuine Exmark parts when necessary.
- Carefully release pressure from components with stored energy.

⚠ WARNING ⚠

Removing or modifying original equipment, parts, and/or accessories may alter the warranty, controllability, and safety of the machine. Making unauthorized modifications to the original equipment or failing to use original Exmark parts could lead to serious injury or death.

- Check the parking brake operation frequently. Adjust and service it as required.
- Never tamper with safety devices. Check their proper operation regularly.
- Clean grass, leaves, excessive grease and oil, and other debris from the cutting unit, muffler, drives, grass catcher, and engine compartment to prevent fires.
- Clean up oil or fuel spills and remove fuel-soaked debris.
- Do not rely solely on mechanical or hydraulic jacks to support the machine. Use adequate jack stands.
- Keep all parts in good working condition and all hardware tightened, especially the blade-attachment hardware.

- To ensure optimum performance, use only genuine Exmark replacement parts and accessories. Replacement parts and accessories made by other manufacturers could be dangerous.

Recommended Maintenance Schedule

Maintenance Service Interval	Maintenance Procedure
After the first 5 hours	Change the engine oil.
After the first 100 hours	Change the hydraulic fluid and filter.
	Check the parking brake adjustment.
Before each use or daily	Check the safety-interlock system.
	Check the air cleaner for dirty, loose, or damaged parts.
	Check the engine-oil level.
	Clean the air-intake screen.
	Inspect the blades.
	Inspect the grass deflector for damage.
	Check the roll bar knobs.
	Check the seat belt.
	Check for loose hardware.
	Check the hydraulic-fluid and tank level.
After each use	Clean grass and debris from the machine.
	Clean the mower-deck housing.
Every 50 hours	Check the tire pressure.
	Check the belts for wear or cracks.
	Check the spark arrester (if equipped).
Every 100 hours	Service the air-cleaner paper element (more often under severe conditions).
	Change the engine oil (more often in dirty or dusty conditions).
	Remove the engine shrouds and clean the cooling fins.
Every 200 hours	Check the spark plugs.
	Change the engine oil filter. (more often under severe conditions).
Every 250 hours	Replace the primary air filter (more often in dirty or dusty conditions).
	Check the safety air filter (more often in dirty or dusty conditions).
	Change the hydraulic fluid and filter if using Mobil 1 fluid (more often under severe conditions).
Every 400 hours	Change the hydraulic fluid and filter if using Exmark fluid (more often under severe conditions).
Every 500 hours	Replace the safety air filter.
	Check the parking brake adjustment.
Monthly	Check the battery charge.
Yearly	Grease the front caster pivots.
Before storage	Charge the battery and disconnect the battery cables.
	Perform all maintenance procedures listed above before storage.

Maintenance Service Interval	Maintenance Procedure
	Paint any chipped surfaces.

IMPORTANT

Refer to your engine owner's manual for additional maintenance procedures.

⚠ CAUTION ⚠

If you leave the key in the switch, someone could accidently start the engine and seriously injure you or other bystanders.

Shut off the engine and remove the key from the switch before you perform any maintenance.

Pre-Maintenance Procedures

Moving a Non-Functioning Machine

⚠ WARNING ⚠

Hands may become entangled in the rotating drive components below the engine deck, which could result in serious injury.

Shut off the engine, remove the key, and allow all moving parts to stop before accessing the drive-wheel-release valves.

⚠ WARNING ⚠

The engine and hydraulic-drive units can become very hot. Touching a hot engine or hydraulic-drive units can cause severe burns.

Allow the engine and hydraulic-drive units to cool completely before accessing the drive-wheel-release valves.

1. Park the machine on a level surface, disengage the blade-control switch, move the motion-control levers outward to the NEUTRAL-LOCK position, and engage the parking brake.
2. Shut off the engine and wait for all moving parts to stop before leaving the operating position.
3. Allow the machine to cool.
4. Locate the release valves on the back of the hydraulic drive units.

Moving a Non-Functioning Machine (continued)

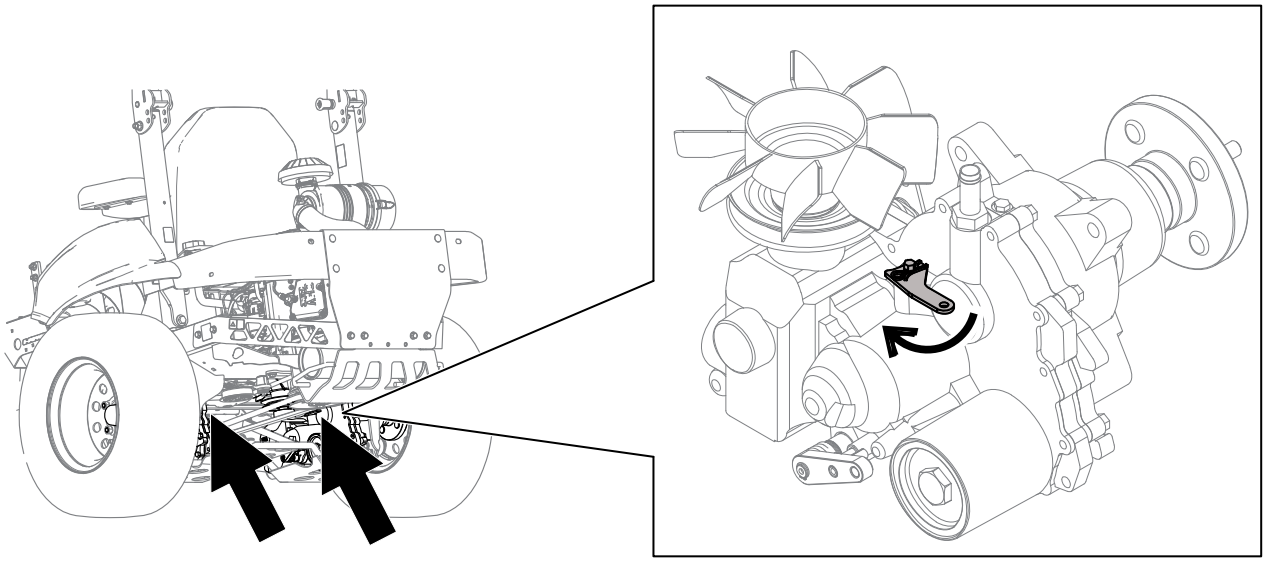

G565866

5. Rotate both valve handles forward to the RELEASED position until they hit against the stop.

⚠ WARNING ⚠

The machine could unintentionally move while the valve handles are in the RELEASED position and injure you or bystanders.

Rotate the valve handles rearward to the OPERATING position after moving the machine.

6. Disengage the parking brake.
7. Move the machine as required.

IMPORTANT

Always push the machine by hand. Do not tow the machine, because towing may damage it.

8. Engage the parking brake.
9. Rotate both valve handles rearward to the OPERATING position until they hit against the stop before operating the machine.

Removing or Installing the Floor Pan

⚠ WARNING ⚠

You can be seriously injured if you operate the machine with the floor pan removed, or if you do not completely remove the floor pan to perform maintenance on components beneath it.

Do not operate the machine with the floor pan removed. Completely remove the floor pan before you perform maintenance underneath it.

---

1. To remove the floor pan, lift the floor pan and pull it out of the openings in the frame.

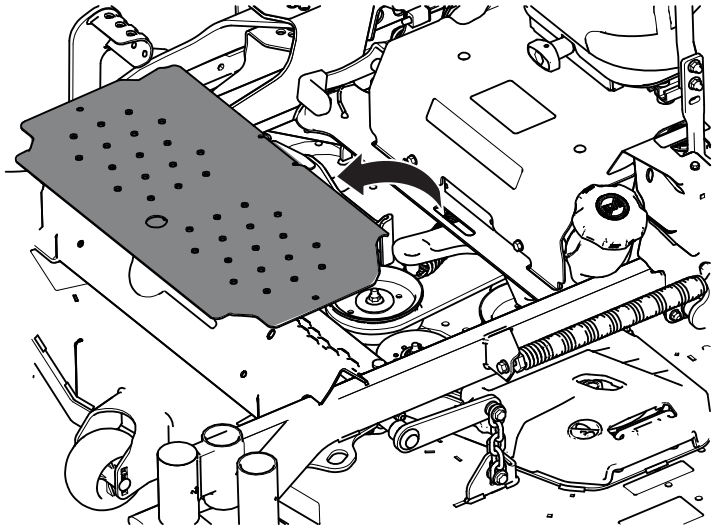

G566062

2. To install the floor pan, place the floor pan in the openings in the frame and lower it into place.

Removing or Installing the Floor Pan (continued)

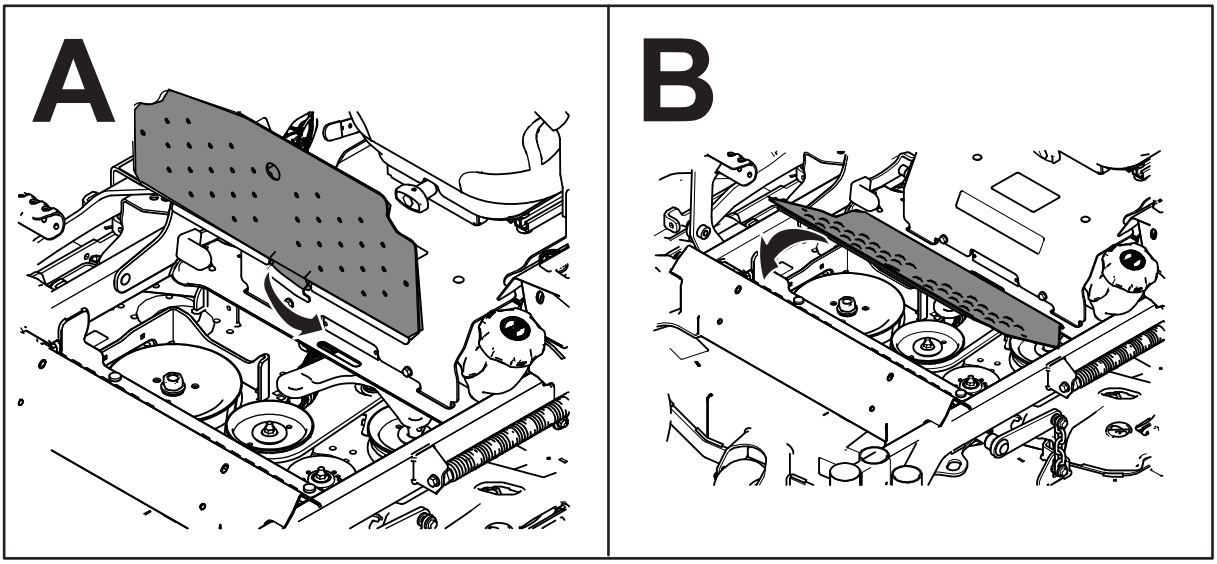

G566064

Lubrication

Greasing the Machine

Grease more frequently when operating conditions are extremely dusty or sandy.

Grease Type: No. 2 lithium or molybdenum grease

1. Park the machine on a level surface, disengage the blade-control switch, move the motion-control levers outward to the NEUTRAL-LOCK position, and engage the parking brake.
2. Shut off the engine, remove the key, and wait for all moving parts to stop before leaving the operating position.
3. Clean the grease fittings with a rag.

   Note: Make sure that you scrape any paint off the front of the fitting(s).
4. Connect a grease gun to the fitting.
5. Pump grease into the fittings until grease begins to ooze out of the bearings.
6. Wipe up any excess grease.

Greasing the Caster-Wheel Hubs

1. Park the machine on a level surface, disengage the blade-control switch, move the motion-control levers outward to the NEUTRAL-LOCK position, and engage the parking brake.
2. Shut off the engine, remove the key, and wait for all moving parts to stop before leaving the operating position.

Greasing the Caster-Wheel Hubs (continued)

3. Raise the mower for access.
4. Remove the caster wheel from the caster forks.
5. Remove the seal guards from the wheel hub.

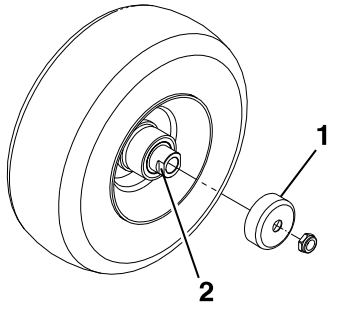

g006115s

1. Seal guard
2. Spacer nut with wrench flats

6. Remove a spacer nut from the axle assembly in the caster wheel.

   Note: Thread-locking compound has been applied to lock the spacer nuts to the axle.
7. Remove the axle (with the other spacer nut still assembled to it) from the wheel assembly.
8. Pry out seals and inspect bearings for wear or damage and replace if necessary.
9. Pack the bearings with a general-purpose grease.
10. Insert 1 bearing and 1 new seal into the wheel.
11. If the axle assembly is missing both spacer nuts, apply a thread-locking compound to 1 spacer nut and thread it onto the axle with the wrench flats facing outward.

    Note: Do not thread the spacer nut all of the way onto the end of the axle. Leave approximately 3 mm (1/8 inch) from the outer surface of the spacer nut to the end of the axle inside the nut.
12. Insert the assembled nut and axle into the wheel on the side with the new seal and bearing.
13. With the open end of the wheel facing up, fill the area inside the wheel around the axle full of general-purpose grease.
14. Insert the second bearing and new seal into the wheel.
15. Apply a thread-locking compound to the second spacer nut, and thread it onto the axle with the wrench flats facing outward.

16. Torque the nut to **8 to 9 N·m (75 to 80 in-lb)**, loosen the nut, then torque it to **2 to 3 N·m (20 to 25 in-lb)**.

    Note: Make sure that the axle does not extend beyond either nut.
17. Install the seal guards over the wheel hub, and insert the wheel into the caster fork.
18. Install the caster bolt and tighten the nut fully.

Greasing the Caster-Wheel Hubs (continued)

IMPORTANT

To prevent seal and bearing damage, check the bearing adjustment often. Spin the caster tire. The tire should not spin freely (more than 1 or 2 revolutions) or have any side play. If the wheel spins freely, adjust the torque on the spacer nut until there is a slight amount of drag. Apply another layer of thread-locking compound.

Greasing the Caster Pivots

1. Park the machine on a level surface, disengage the blade-control switch, move the motion-control levers outward to the NEUTRAL-LOCK position, and engage the parking brake.
2. Shut off the engine, remove the key, and wait for all moving parts to stop before leaving the operating position.
3. Remove the dust cap, adjust the caster pivots, and keep the dust cap off until greasing is done.
4. Remove the hex plug.
5. Thread a grease fitting into the hole.
6. Pump grease into the fitting until it oozes out around the top bearing.
7. Remove the grease fitting from the hole. Install the hex plug and cap.

Engine Maintenance

Engine Safety

- Keep your hands, feet, face, other body parts, and clothing away from the muffler and other hot surfaces. Wait for the engine to cool before performing maintenance.
- Do not change the engine governor speed or overspeed the engine.

Checking the Spark Arrester

For Machines with a Spark Arrester

⚠ WARNING ⚠

Hot exhaust-system components may ignite fuel vapors even after you shut off the engine. Hot particles exhausted during engine operation may ignite flammable materials, resulting in personal injury or property damage.

Do not refuel or run the engine unless the spark arrester is installed.

---

1. Park the machine on a level surface, disengage the blade-control switch, and move the motion-control levers outward to the NEUTRAL-LOCK position, and engage the parking brake.
2. Shut off the engine, remove the key, and wait for all moving parts to stop before leaving the operating position.
3. Wait for the muffler to cool.
4. If you see any breaks in the screen or welds, replace the arrester.
5. If the screen is plugged, remove the arrester, shake loose particles out of the arrester, and clean the screen with a wire brush (soak the screen in solvent if necessary).
6. Install the arrester on the exhaust outlet.

Servicing the Air Cleaner

Removing the Filters

1. Park the machine on a level surface, disengage the blade-control switch, and move the motion-control levers outward to the NEUTRAL-LOCK position, and engage the parking brake.
2. Shut off the engine, remove the key, and wait for all moving parts to stop before leaving the operating position.
3. Release the latches (3) on the air cleaner and pull the air-cleaner cover off the air-cleaner body.
4. Clean the inside of the air-cleaner cover (4) with compressed air.
5. Gently slide the primary filter (2) out of the air-cleaner body (1).

   Note: Avoid knocking the filter into the side of the body.
6. Remove the safety filter (5) only to replace it.

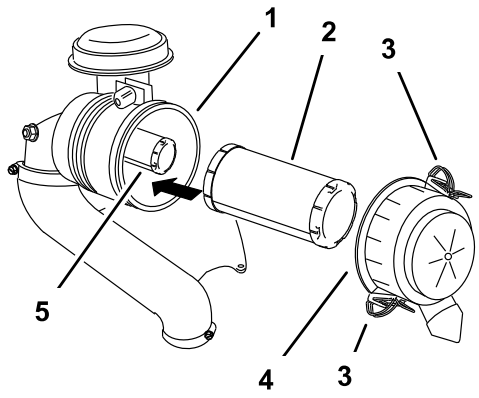

g001883S

Servicing the Air Cleaner (continued)

Inspecting the Filters

1. Inspect the safety filter. If it is dirty, replace both the safety and primary filters.

IMPORTANT

Do not attempt to clean the safety filter. If the safety filter is dirty, then the primary filter is damaged.

2. Inspect the primary filter for damage by looking into the filter while shining a bright light on the outside of the filter. If the primary filter is dirty, bent, or damaged, replace it.

   Note: Holes in the filter appear as bright spots. Do not clean the primary filter.

Installing the Filters

IMPORTANT

To prevent engine damage, always operate the engine with both air filters and the cover installed.

1. If you are installing new filters, check each filter for shipping damage.

   Note: Do not use a damaged filter.
2. If you are replacing the inner filter, carefully slide it into the filter body.
3. Carefully slide the primary filter over the safety filter.

   Note: Ensure that the primary filter is fully seated by pushing on the outer rim while installing it.

IMPORTANT

Do not press on the soft, inside area of the filter.

4. Install the air-cleaner cover and secure the latches.

Engine-Oil Service

Engine-Oil Specifications

Oil Type	Exmark 4-cycle Premium Engine Oil of API service SJ or SL
Crankcase Capacity	2.0 L (68 fl oz) with the filter; 1.9 L (66 fl oz) without the filter

Engine-Oil Service (continued)

Viscosity	Refer to the following table.

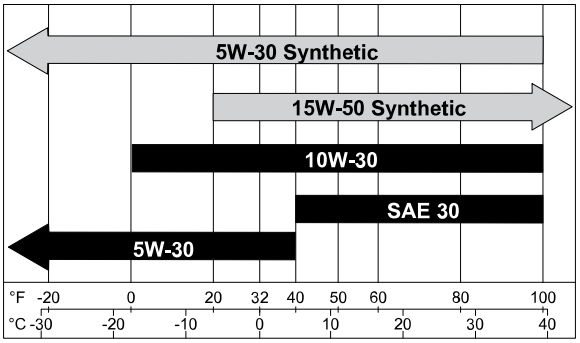

Checking the Engine-Oil Level

1. Park the machine on a level surface, disengage the blade-control switch, move the motion-control levers outward to the NEUTRAL-LOCK position, and engage the parking brake.
2. Shut off the engine, remove the key, and wait for all moving parts to stop before leaving the operating position.
3. Wait for the engine to cool so that the oil has had time to drain into the sump.
4. To keep dirt, grass clippings, etc., out of the engine, clean the area around the oil-fill cap and dipstick before removing it.
5. Check the engine-oil level as shown.

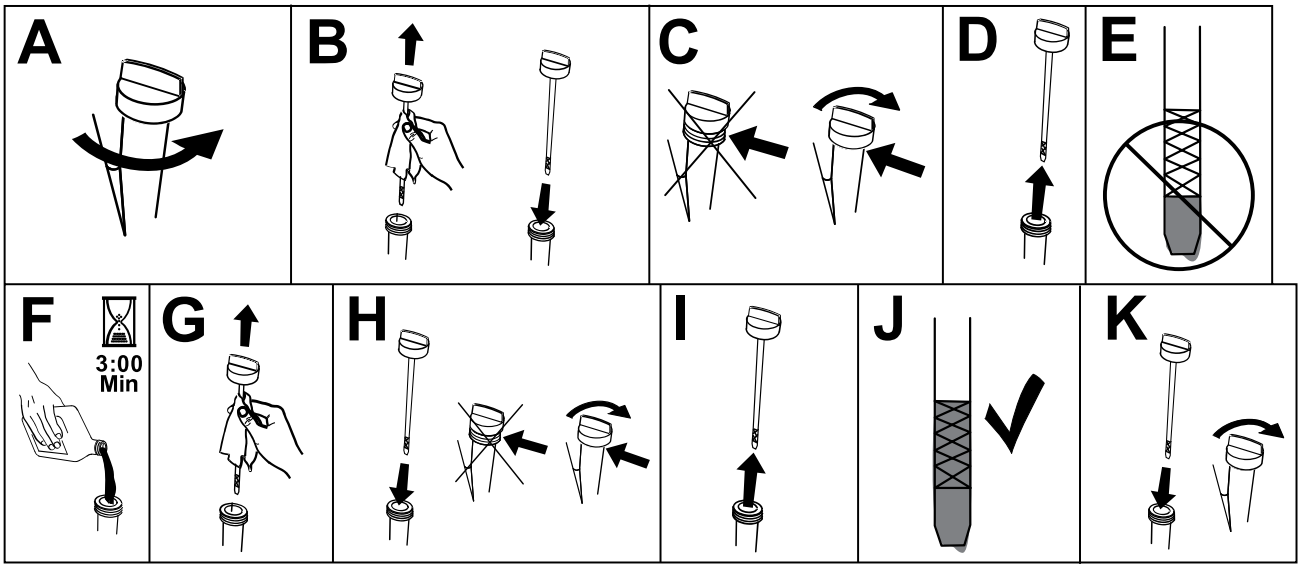

G373146s

IMPORTANT

If you overfill or underfill the engine crankcase with oil and run the engine, you may damage the engine.

Engine-Oil Service (continued)

Changing the Engine Oil

1. Park the machine so that the drain side is slightly lower than the opposite side to ensure that the oil drains completely.
2. Disengage the blade-control switch (PTO), move the motion-control levers outward to the NEUTRAL-LOCK position, and engage the parking brake.
3. Shut off the engine, remove the key, and wait for all moving parts to stop before leaving the operating position.
4. Drain the oil from the engine.

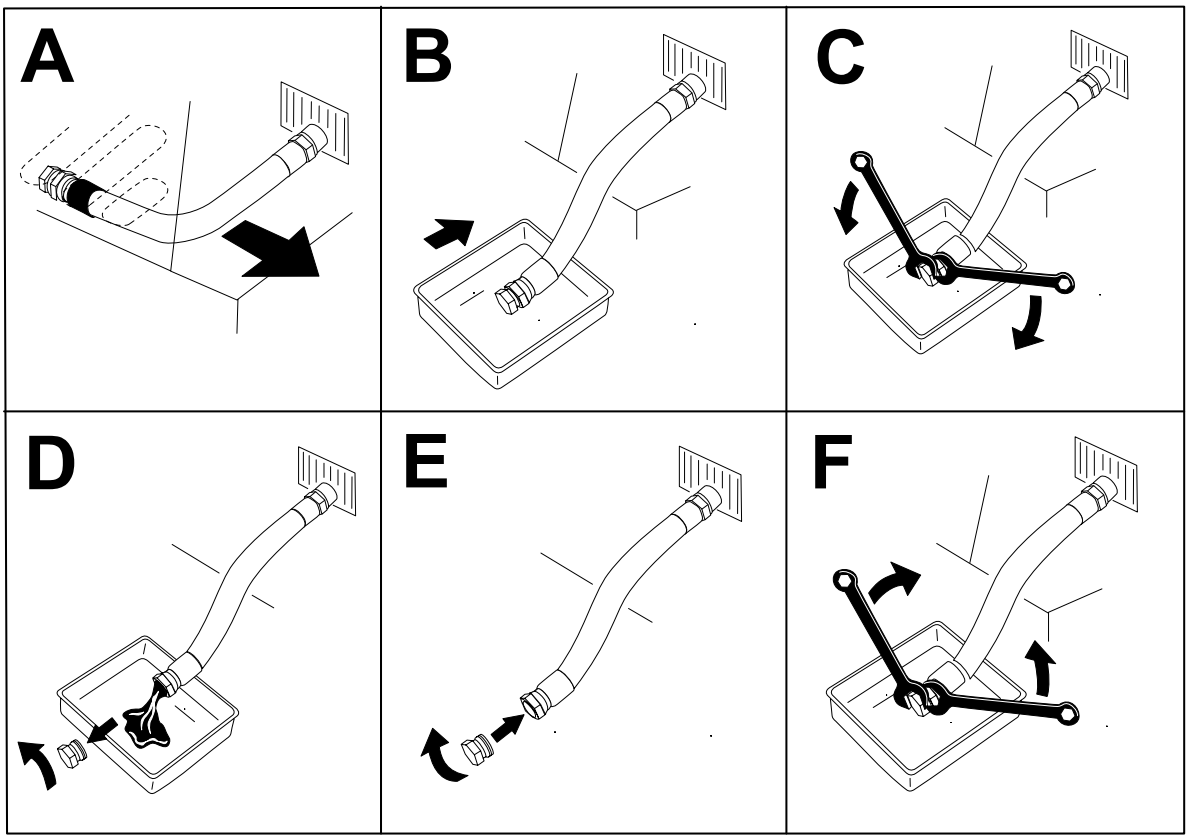

G564230

5. Slowly pour approximately 80% of the specified oil into the filler tube and slowly add the additional oil to bring it to the **Full** mark.

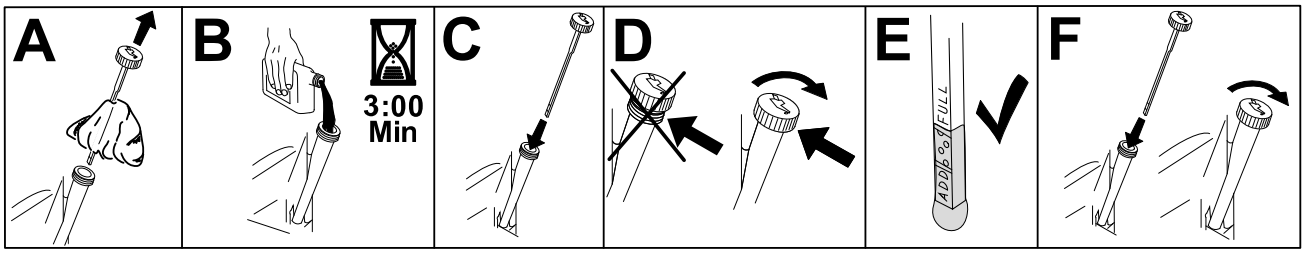

G235264s

6. Dispose of the used oil per local regulations.

Engine-Oil Service (continued)

Changing the Engine-Oil Filter

1. Drain the oil from the engine.
2. Change the engine-oil filter as shown.

   Note: Ensure that the oil-filter gasket touches the engine, and then turn the oil filter an extra 3/4 turn.

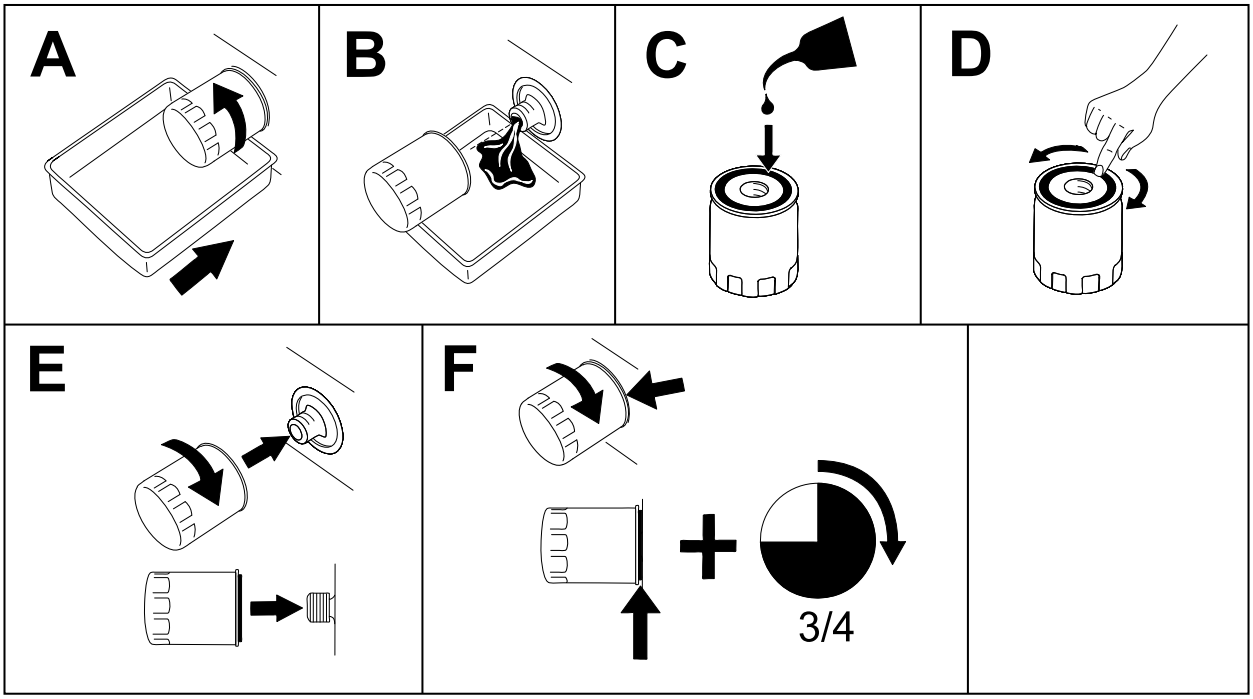

G398545s

3. Slowly add the specified oil into the filler tube to bring the oil level to the **Full** mark.

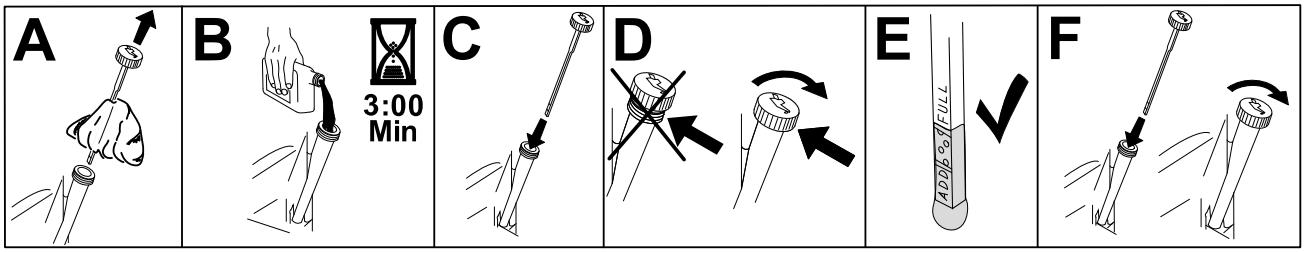

G235264s

Servicing the Spark Plug

Ensure that the air gap between the center and side electrodes is correct before installing the spark plug. Use a spark plug wrench for removing and installing the spark plug and a gapping tool or feeler gauge to check and adjust the air gap. Install a new spark plug if necessary.

Type: Briggs and Stratton® 491055

Air gap: 0.76 mm (0.03 inch)

Servicing the Spark Plug (continued)

Removing the Spark Plug(s)

1. Park the machine on a level surface, disengage the blade-control switch (PTO), and engage the parking brake.
2. Shut off the engine, remove the key, and wait for all moving parts to stop before leaving the operating position.
3. Clean the area around the base of the plug to keep dirt and debris out of the engine.
4. Locate and remove the spark plug(s).

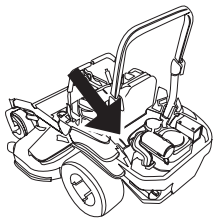

g009922S

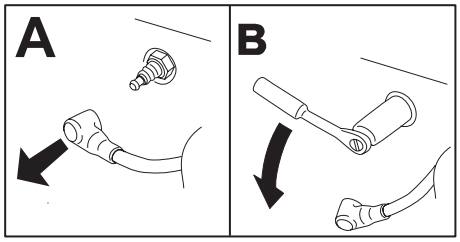

g027478S

Checking the Spark Plug

IMPORTANT

Do not clean the spark plug(s). Always replace the spark plug(s) when it has a black coating, worn electrodes, an oily film, or cracks.

If you see light brown or gray on the insulator, the engine is operating properly. A black coating on the insulator usually means the air cleaner is dirty.

Set the gap to 0.75 mm (0.03 inch).

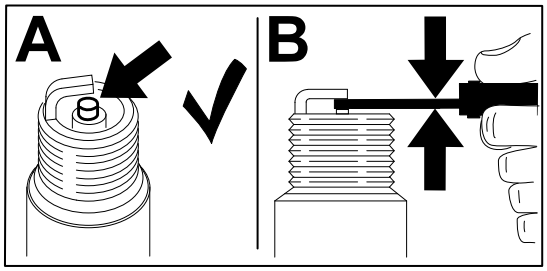

G437150

Servicing the Spark Plug (continued)

Installing the Spark Plug

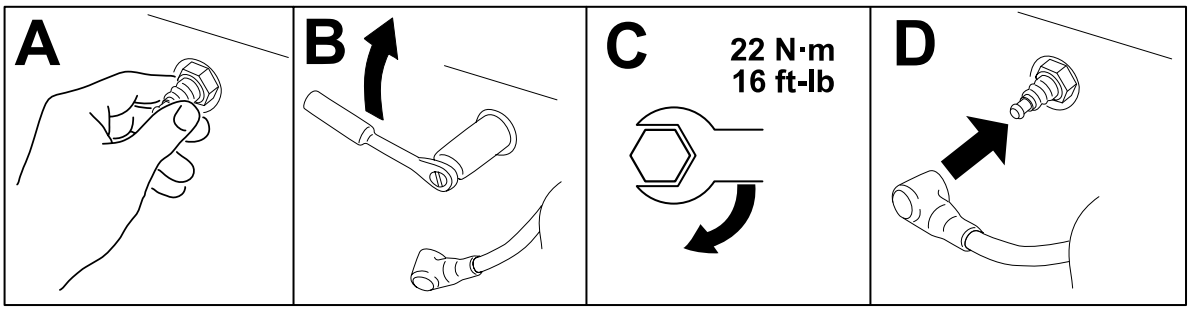

G560324

Cleaning the Cooling System

1. Park the machine on a level surface, disengage the blade-control switch, move the motion-control levers outward to the NEUTRAL-LOCK position, and engage the parking brake.
2. Shut off the engine, remove the key, and wait for all moving parts to stop before leaving the operating position.
3. Remove the air filter from the engine.
4. Loosen the bolts securing the engine shroud and remove the shroud.
5. To prevent debris entering the air intake, install the air filter to the filter base.
6. Clean debris and grass from the parts.
7. Remove the air filter and install the engine shroud.
8. Install the air filter.

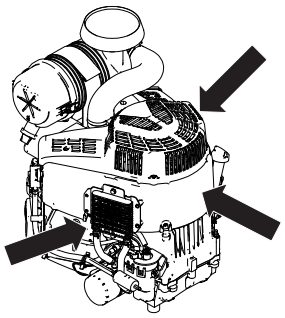

g403578S

Fuel Maintenance

⚠ DANGER ⚠

In certain conditions, fuel is extremely flammable and highly explosive. A fire or explosion from fuel can burn you and others and can damage property.

Refer to Fuel Safety for a complete list of fuel related precautions.

Replacing the Fuel Filter

1. Park the machine on a level surface, disengage the blade-control switch, move the motion-control levers outward to the NEUTRAL-LOCK position, and engage the parking brake.
2. Shut off the engine, remove the key, and wait for all moving parts to stop before leaving the operating position.
3. Clamp the fuel lines on both sides of the fuel filter.
4. Replace the filter.

   Note: Ensure that the flow-direction arrow on the replacement filter points toward the engine.

IMPORTANT

Never install a dirty filter after removing it from the fuel line.

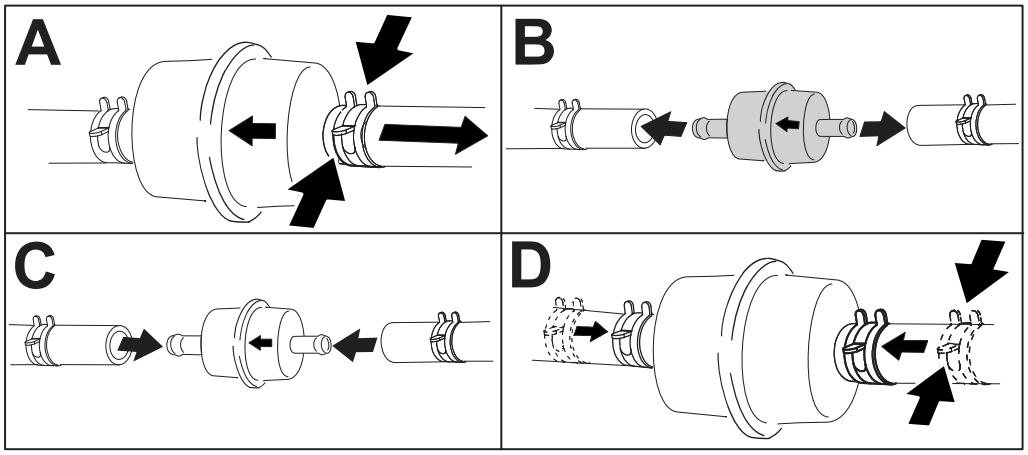

G331234s

5. Remove the clamps blocking the fuel flow.

Electrical System Maintenance

Electrical System Safety

- Disconnect the cable from the negative terminal of the battery before repairing the machine.
- Charge the battery in an open, well-ventilated area, away from sparks and flames. Unplug the charger before connecting or disconnecting the battery. Wear protective clothing and use insulated tools.

Battery Service

Removing the Battery

⚠ WARNING ⚠

Battery terminals or metal tools could short against metal machine components, causing sparks. Sparks can cause the battery gasses to explode, resulting in personal injury.

- **When removing or installing the battery, do not allow the battery terminals to touch any metal parts of the machine.**
- **Do not allow metal tools to short between the battery terminals and metal parts of the machine.**

---

1. Park the machine on a level surface, disengage the blade-control switch, move the motion-control levers outward to the NEUTRAL-LOCK position, and engage the parking brake.
2. Shut off the engine, remove the key, and wait for all moving parts to stop before leaving the operating position.
3. Disconnect the negative (black) ground cable from the battery post.

   Note: Retain all fasteners.

⚠ WARNING ⚠

Incorrectly removing the cables from battery could damage the machine and cables, causing sparks. Sparks can cause the battery gasses to explode, resulting in personal injury.

- **Always disconnect the negative (black) battery cable before disconnecting the positive (red) cable.**
- **Always connect the positive (red) battery cable before connecting the negative (black) cable.**

---

4. Slide the rubber cover off the positive (red) cable.
5. Disconnect the positive (red) cable from the battery post (+).

   Note: Retain all fasteners.
6. Remove the battery hold-down and lift the battery from the battery tray.

Battery Service (continued)

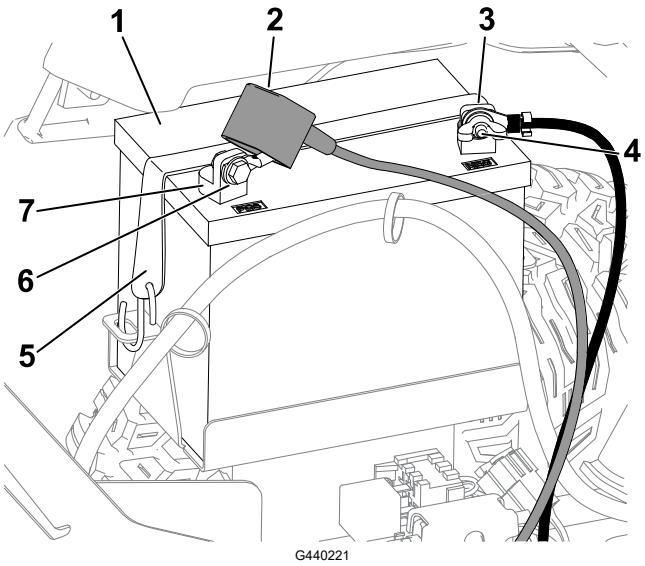

1. Battery
2. Terminal boot
3. Negative (–) battery post
4. Wing nut, washer, and bolt
5. Battery hold-down
6. Bolt, washer, and nut
7. Positive (+) battery post

Charging the Battery

⚠ WARNING ⚠

Charging the battery produces gasses that can explode.

Never smoke near the battery and keep sparks and flames away from battery.

IMPORTANT

Always keep the battery fully charged. This is especially important to prevent battery damage when the temperature is below 0°C (32°F).

1. Remove the battery from the machine.
2. Charge the battery per the battery charger manufacturer’s instructions.

IMPORTANT

Do not overcharge the battery; otherwise, you could damage it.

Battery Service (continued)

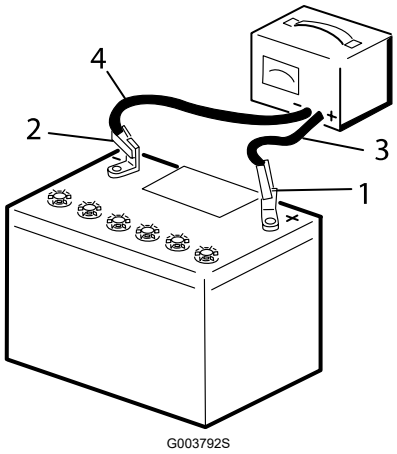

1. Positive battery post
2. Negative battery post
3. Red (+) charger lead
4. Black (-) charger lead

3. When the battery is fully charged, unplug the charger from the electrical outlet (if applicable), then disconnect the charger leads from the battery posts.

Battery Service (continued)

Cleaning the Battery

Note: Keep the terminals and the entire battery case clean, because a dirty battery discharges slowly.

1. Park the machine on a level surface, disengage the blade-control switch, move the motion-control levers outward to the NEUTRAL-LOCK position, and engage the parking brake.
2. Shut off the engine and wait for all moving parts to stop before leaving the operating position.
3. Remove the battery from the machine.
4. Wash the entire case with a solution of baking soda and water.
5. Rinse the battery with clear water.
6. Coat the battery posts and cable connectors with Grafo 112X (skin-over) grease or petroleum jelly to prevent corrosion.
7. Install the battery.

Battery Service (continued)

Installing the Battery

1. Position the battery in the tray.
2. Using the fasteners previously removed, install the positive (red) battery cable to the positive (+) battery terminal.
3. Using the fasteners previously removed, install the negative battery cable to the negative (-) battery terminal.
4. Slide the red terminal boot onto the positive (red) battery post.
5. Secure the battery with the hold-down.

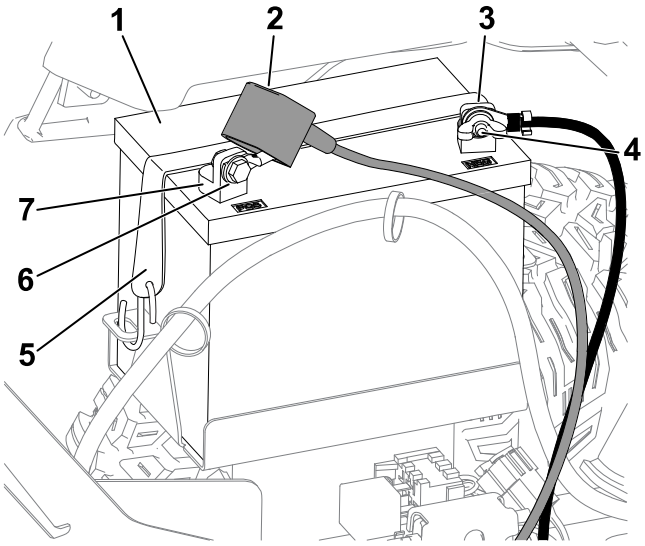

1. Battery
2. Terminal boot
3. Negative (–) battery post
4. Wing nut, washer, and bolt
5. Battery hold-down
6. Bolt, washer, and nut
7. Positive (+) battery post

Jump-Starting the Machine

⚠ WARNING ⚠

Jump-starting the battery can produce gasses that can explode.

Do not smoke near the battery, and keep sparks and flames away from battery.

⚠ DANGER ⚠

Jump-starting a weak battery that is cracked or frozen or has a low electrolyte level or an open/shorted battery cell can cause an explosion, resulting in serious personal injury.

Do not jump-start a weak battery if these conditions exist.

---

1. Check and clean corrosion from the battery terminals before jump-starting. Ensure that the connections are tight.

⚠ CAUTION ⚠

Corrosion or loose connections can cause unwanted electrical voltage spikes at any time during the jump-starting procedure.

Do not attempt to jump-start the machine with loose or corroded battery terminals, or damage to the engine may occur.

---

2. Make sure that the booster battery is a good and fully charged lead-acid battery at 12.6 V or greater.

   Note: Use properly sized jumper cables with short lengths to reduce voltage drop between systems. Make sure that the cables are color coded or labeled for the correct polarity.

⚠ WARNING ⚠

Batteries contain acid and produce explosive gases.

- **Shield your eyes and face from the batteries at all times.**
- **Do not lean over the batteries.**

   Note: Ensure that the vent caps are tight and level. Place a damp cloth, if available, over any vent caps on both batteries. Also ensure that the machines do not touch and that both electrical systems are off and at the same rated system voltage. These instructions are for negative ground systems only.

3. Connect the positive (+) cable to the positive (+) terminal of the discharged battery that is wired to the starter or solenoid as shown:

Jump-Starting the Machine (continued)

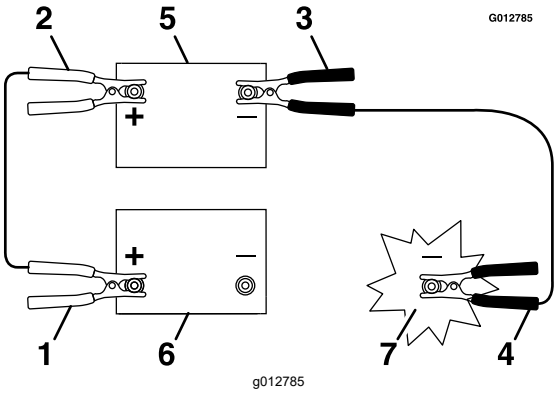

1. Positive (+) cable on discharged battery
2. Positive (+) cable on booster battery
3. Negative (–) cable on the booster battery
4. Negative (–) cable on the engine block
5. Booster battery
6. Discharged battery
7. Engine block

4. Connect the other end of the positive (+) jumper cable to the positive terminal of the battery in the other machine.
5. Connect an end of the negative (-) jumper cable to the negative post of the battery in the other machine.
6. Connect the other end of the negative (-) jumper cable to a ground point, such as an unpainted bolt or chassis member.
7. Start the engine in the other machine. Let it run a few minutes, then start your engine.
8. Remove the cables in the reverse order of connection.
9. Install the cover to the jump post.

Servicing the Fuses

The electrical system is protected by fuses. It requires no maintenance; however, if a fuse blows, check the component/circuit for a malfunction or short.

1. Park the machine on a level surface, disengage the blade-control switch, move the motion-control levers outward to the NEUTRAL-LOCK position, and engage the parking brake.
2. Shut off the engine, remove the key, and wait for all moving parts to stop before leaving the operating position.
3. Replace the blown fuse with a new fuse.

Drive System Maintenance

Checking the Tire Pressure

Maintain the air pressure in the front and rear tires as specified. Uneven tire pressure can cause an uneven cut. Check the pressure at the valve stem when the tires are cold to get the most accurate pressure reading.

1. Inflate the front caster wheel tires to 90 kPa (13 psi) or the pressure indicated on the sidewall, whichever is lower.
2. Inflate the rear drive-wheel tires to 90 kPa (13 psi).

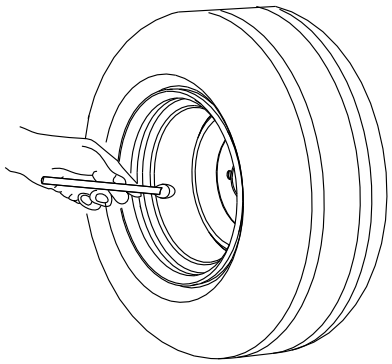

G441539

Checking the Wheel Lug Nuts

Check and torque the wheel lug nuts to **129 N·m (95 ft-lb)**.

Adjusting the Tracking

When driving the machine forward full speed across a flat, level surface, if the machine pulls to 1 side, adjust the tracking.

If the machine pulls to the left, adjust the right motion-control lever; if the machine pulls to the right, adjust the left motion-control lever.

Note: You can adjust the tracking only for driving forward.

Adjusting the Tracking (continued)

1. Park the machine on a level surface, disengage the blade-control switch, move the motion-control levers outward to the NEUTRAL-LOCK position, and engage the parking brake.
2. Shut off the engine, remove the key, and wait for all moving parts to stop before leaving the operating position.
3. Locate the tracking-adjustment bolt near the motion-control lever on the particular side that needs adjusting.

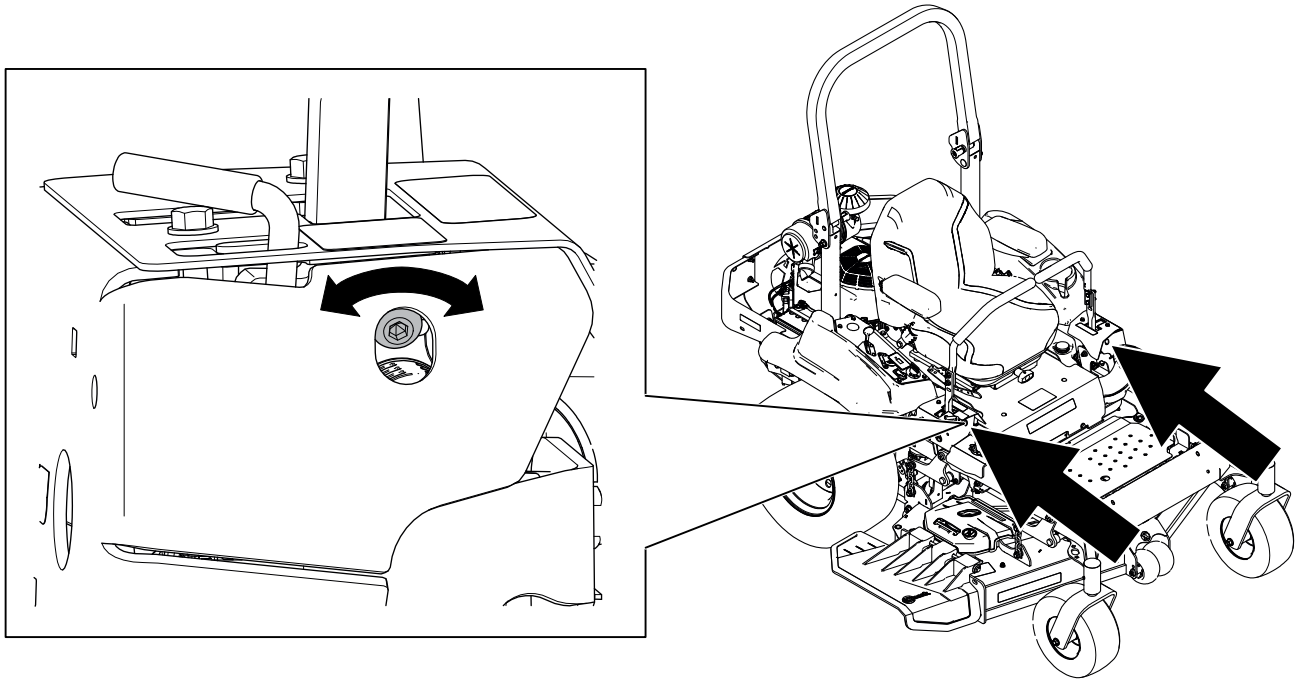

G566024

4. Rotate the bolt to decrease the speed for that particular wheel.

   Note: Rotate the bolt a small amount to make minor adjustments.
5. Start the machine and drive forward across a flat, level surface with the motion-control levers fully forward to check if the machine tracks straight. Repeat the procedure as needed.

Adjusting the Motion-Control Linkage

The pump-control linkages are located below the seat on either side of the machine. Rotate the end nut with a 1/2-inch deep socket wrench for fine tuning adjustments so that the machine does not move in neutral. Make any adjustments for neutral positioning only.

Adjusting the Motion-Control Linkage (continued)

⚠ WARNING ⚠

The engine must be running and the drive wheels turning so that you can perform the adjustments. Contact with moving parts or hot surfaces may cause personal injury.

Keep your fingers, hands, and clothing clear of rotating components and hot surfaces.

---

1. Park the machine on a level surface, disengage the blade-control switch (PTO), move the motion-control levers to the NEUTRAL-LOCK position, and engage the parking brake.
2. Shut off the engine, remove the key, and wait for all moving parts to stop before leaving the operating position.
3. Push the deck-lift pedal, remove the height-of-cut pin, and lower the mower deck to the ground.
4. Raise the rear of the machine up and support it with jack stands (or equivalent support) just high enough to allow the drive wheels to turn freely.
5. Remove the electrical connection from the seat safety switch, located under the bottom cushion of the seat.

   Note: The switch is a part of the seat assembly.
6. **Temporarily** install a jumper wire across the terminals in the connector of the main wire harness.
7. Start the engine, run it at full throttle, and disengage the parking brake.

   Note: Before starting the engine, ensure that the parking brake is engaged and that the motion-control levers are out. You do not have to be in the seat.
8. Run the machine at least 5 minutes with the drive levers at full forward speed to bring the hydraulic fluid up to the operating temperature.

   Note: The motion-control levers must be in neutral while you are making any adjustments.
9. Bring the motion-control levers into the NEUTRAL position.
10. Adjust the pump-control-rod lengths by rotating the nut in the appropriate direction until the wheels slightly creep in reverse.

Adjusting the Motion-Control Linkage (continued)

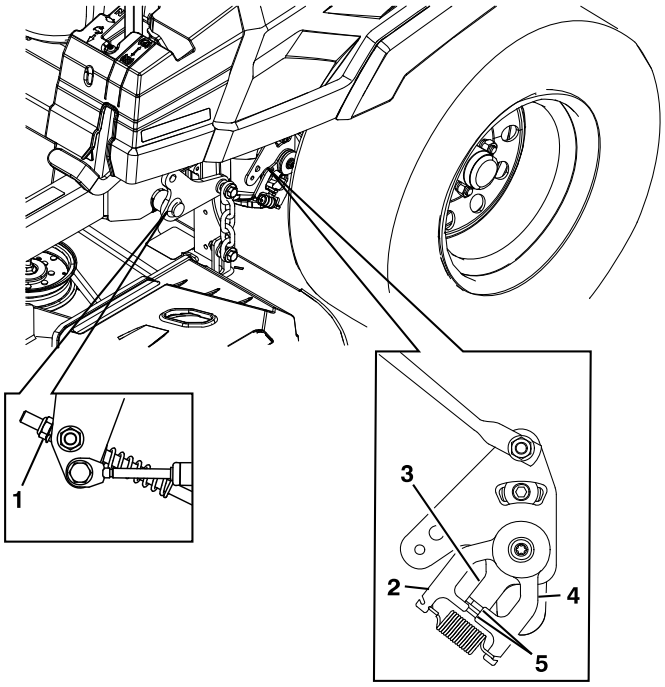

G567314

1. Nut
2. Stationary plate
3. Control plate
4. Return-to-neutral plate
5. Tabs touching return-to-neutral plate

11. Move the motion-control levers to the REVERSE position. While applying slight pressure to the lever, allow the reverse-indicator springs to bring the levers back to neutral.

    Note: The wheels should stop turning or slightly creep in reverse.
12. Shut off the machine.
13. Remove the jumper wire from the wire harness and plug the connector into the seat switch.
14. Remove the jack stands.
15. Raise the mower deck and install the height-of-cut pin.
16. Check and ensure that the machine does not creep in neutral with the parking brake disengaged.

Adjusting the Electric Clutch

When the clutch does not engage consistently, remove the shim to extend the clutch life.

Note: This is not applicable for 48-inch decks.

1. Park the machine on a level surface, disengage the blade-control switch (PTO), and engage the parking brake.

Adjusting the Electric Clutch (continued)

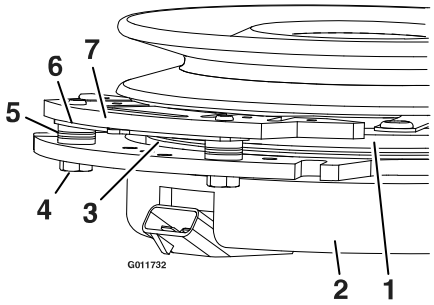

g011732S

1. Armature
2. Field shell
3. Rotor
4. Brake mounting bolt
5. Brake spacer
6. Re-gap shim
7. Brake pole

2. Shut off the machine, remove the key, and wait for all moving parts to stop before leaving the operating position.
3. Remove debris from under the brake pole and around the brake spacers. Check the condition of the wire harness leads, connectors, and terminals. Clean or repair as necessary.
4. Verify that the 12V is present at the clutch connector when the PTO switch is engaged.
5. Measure the gap between the rotor and armature. If the gap is greater than 1 mm (.04 inch):

   A. Loosen both brake mounting bolts 1 one-half to one full turn.

   Note: Do not remove the brake pole from the field shell/armature. The brake pole has worn to match the armature and needs to continue to match after the shim is removed to ensure proper brake torque.

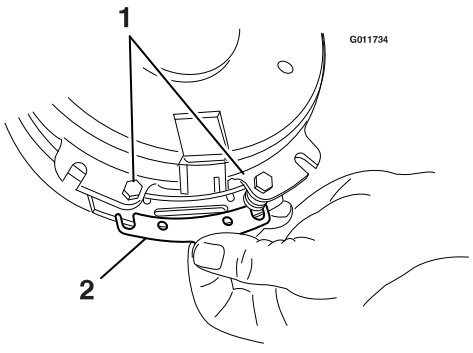

g011734S

   B. Remove the shim 2. Do not discard until proper clutch function has been confirmed.

   C. Remove any debris.

   D. Torque each bolt (M6 x 1) to **12.3 N·m to 13.7 N·m (9.5 ft-lb to 10.5 ft-lb)**.

Adjusting the Electric Clutch (continued)

E. Use a feeler gauge (1) to verify that a gap is present between the rotor and armature face on both sides of the brake pole.

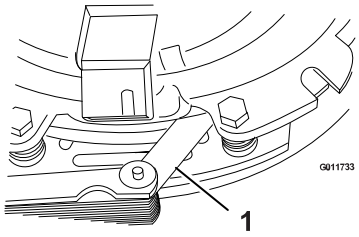

g011733S

6. Perform the following safety check:
   A. Sit on the seat and start the engine.
   B. Ensure that the blades do not engage with the PTO switch OFF and the clutch is disengaged. If the clutch does not disengage, install the shim and refer to the Troubleshooting section.
   C. Engage and disengage the PTO switch 10 consecutive times to ensure the clutch is functioning properly. If the clutch does not engage, refer to the Troubleshooting section.

Adjusting the Pre-load Caster Pivot and Gauge Wheel Pivot Bearings

1. Remove the dust cap from the caster pivot.
2. Tighten the nut until the spring disc washers (1) are flat and back off 1/4 of a turn to properly set the pre-load on the bearings.

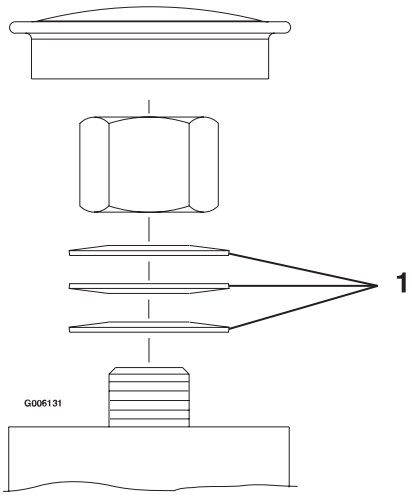

g006131S

Belt Maintenance

Inspecting the Belts

1. Park the machine on a level surface, disengage the blade-control switch, move the motion-control levers outward to the NEUTRAL-LOCK position, and engage the parking brake.
2. Shut off the engine and wait for all moving parts to stop before leaving the operating position.
3. Set the height of cut at the lowest cutting position.
4. Inspect the belt for wear. Replace the belt if it is worn.

   The signs of a worn belt include squealing while the belt is rotating; the blades slipping while cutting grass; and frayed edges, burn marks, and cracks on the belt.

Replacing the Mower Belt

1. Park the machine on a level surface, disengage the blade-control switch, move the motion-control levers outward to the NEUTRAL-LOCK position, and engage the parking brake.
2. Shut off the engine, remove the key, and wait for all moving parts to stop before leaving the operating position.
3. Set the height of cut at the lowest cutting position.
4. Remove the pulley covers.

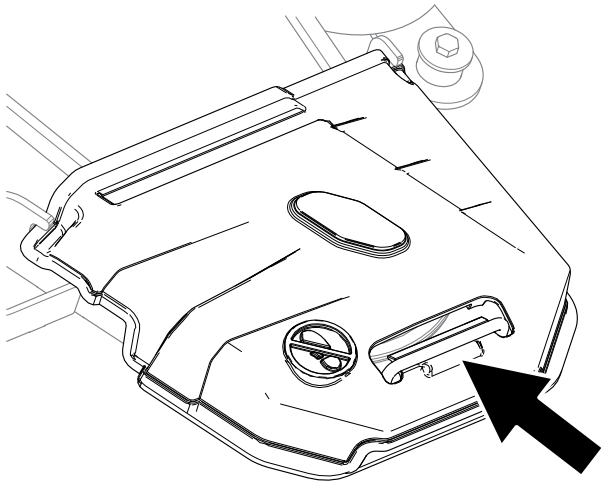

G559991

5. Use a 3/8-inch ratchet in the square hole in the idler arm to remove tension on the idler spring and remove the spring.

Replacing the Mower Belt (continued)

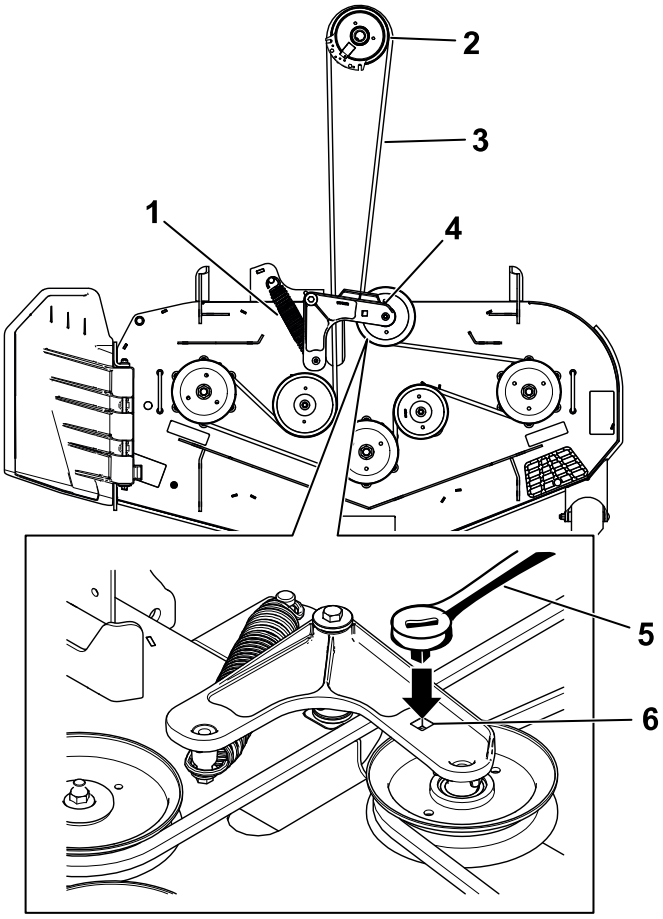

G566063

1. Spring
2. Clutch pulley
3. Mower belt
4. Spring-loaded idler assembly
5. Rachet
6. Square hole in the idler arm for the rachet

6. Remove the belt from the mower-deck pulleys and the clutch pulley.
7. Remove the existing belt.
8. Install the new belt around the mower pulleys and the clutch pulley under the engine.
9. Using the 3/8-inch ratchet in the square hole, install the idler spring.

   Note: Ensure that the spring ends are seated in the anchor grooves.
10. Install the belt covers.

Hydraulic System Maintenance

Hydraulic System Safety

- Seek immediate medical attention if hydraulic fluid is injected into the skin. Injected fluid must be surgically removed within a few hours by a doctor familiar with this form of injury; otherwise, gangrene may result.
- Ensure that all hydraulic-fluid hoses and lines are in good condition and all hydraulic connections and fittings are tight before applying pressure to the hydraulic system.

Hydraulic System Safety (continued)

- Keep your body and hands away from pinhole leaks or nozzles that eject high-pressure hydraulic fluid.
- Use cardboard or paper, not your hands, to find hydraulic leaks.
- Safely relieve all pressure in the hydraulic system before performing any work on the hydraulic system.

Hydraulic-Fluid Specifications

Hydraulic Fluid Type: Exmark Premium Hydro Oil (preferred) or Mobil 1™ 15W50

Hydraulic System Capacity: 3.5 L (118 fl oz) per side

IMPORTANT

Use the specified fluid. Other fluids could damage the system.

Checking the Hydraulic-Fluid Level

1. Park the machine on a level surface, disengage the blade-control switch, and move the motion-control levers outward to the NEUTRAL-LOCK position.
2. Shut off the engine, remove the key, and wait for all moving parts to stop before leaving the operating position.
3. Allow the machine to cool.
4. Check expansion reservoir and if necessary add the specified fluid to the FULL COLD line.

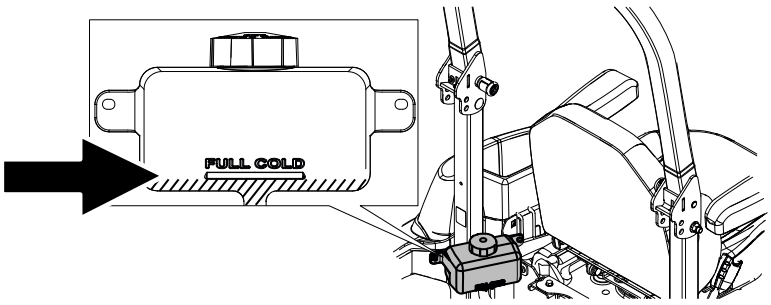

G566066

Changing the Hydraulic Fluid and Filter

IMPORTANT

Do not change the hydraulic fluid without changing the filter unless the fluid has been contaminated or been extremely hot. Otherwise, you could contaminate the system and damage it.

Changing the Hydraulic Fluid and Filter (continued)

1. Park the machine on a level surface, disengage the blade-control switch, and move the motion-control levers outward to the NEUTRAL-LOCK position.
2. Shut off the engine, remove the key, and wait for all moving parts to stop before leaving the operating position.
3. Allow the machine to cool.

IMPORTANT

Only change the hydraulic fluid when the system is cool (less than 38°C or 100°F). Changing the fluid when the system is warm could result in overfilling the transaxle and damage the breather assembly.

4. Remove the filter guard from the transaxle.

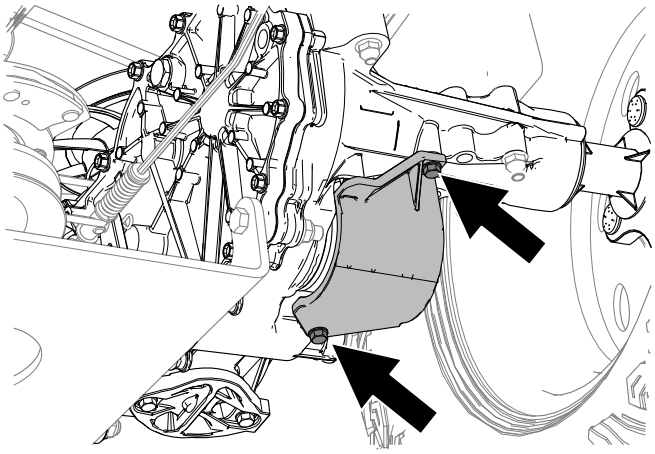

G560039

5. Carefully clean the area around the filter.

IMPORTANT

Do not allow dirt to enter the hydraulic system, or contamination may occur.

6. Place a drain pan under the filter.
7. Replace the filter.

Changing the Hydraulic Fluid and Filter (continued)

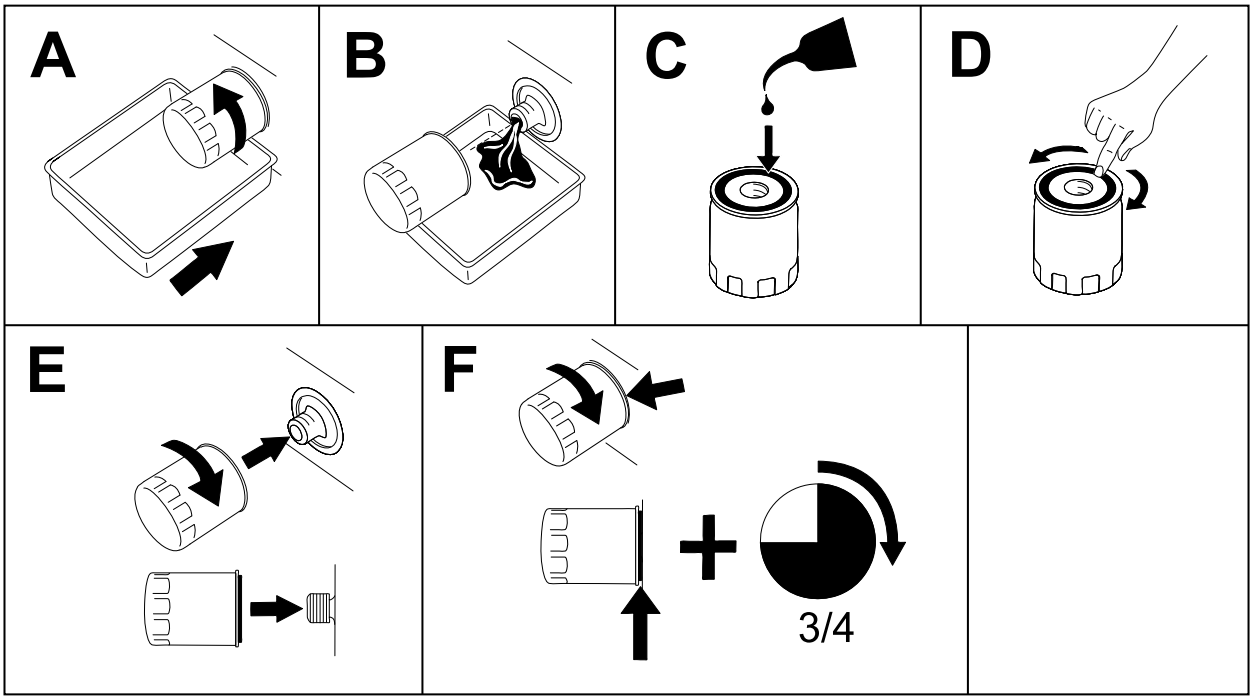

G398545s

8. Install the filter guard. Torque the bolts to **7 N·m (65 in-lb)**.
9. Remove the fill-port plug and add the specified fluid through the port to raise it to the bottom of the hole.

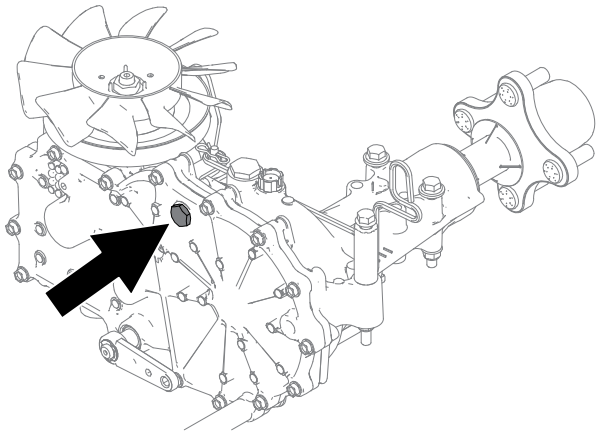

G560031

10. Install the plug and torque it to **12.4 to 14.7 N·m (110 to 150 in-lb)**.
11. Repeat the procedure for the other transaxle.
12. Bleed the hydraulic system.

Bleeding the Hydraulic System

1. Park the machine on a level surface, disengage the blade-control switch, and move the motion-control levers outward to the NEUTRAL-LOCK position.

Bleeding the Hydraulic System (continued)

2. Shut off the engine, remove the key, and wait for all moving parts to stop before leaving the operating position.
3. Raise the rear of the machine onto jack stands high enough to raise the drive wheels off the ground.
4. Start the engine, move the throttle control ahead to the 1/2 throttle position, and disengage the parking brake.
5. With the bypass valves open and the engine running, slowly move the motion-control levers both forward and rearward 5 or 6 times.
6. Shut off the machine and close the bypass valves.
7. Start the engine and slowly move the motion-control levers both forward and rearward 5 or 6 times.
8. Shut off the engine and remove the key.
9. Check the hydraulic fluid level and add fluid as needed.
10. Repeat the procedure as needed until the air is completely purged from the system.

    Note: The air is completely purged when the transaxle operates at normal noise levels and moves smoothly forward and reverse at normal speeds.
11. Remove the jack stands.

Mower-Deck Maintenance

Blade Safety

- Inspect the blades periodically for wear or damage.
- Use care when checking the blades. Wrap the blade(s) or wear gloves and use caution when servicing them. Only replace damaged blades; never straighten or weld them.
- On multi-bladed machines, take care as rotating one blade can cause other blades to rotate.
- Replace worn or damaged blades and bolts in sets to preserve balance.

Blade Service

To ensure a superior quality of cut, keep the blades sharp. For convenient sharpening and replacement, keep extra blades on hand.

Replace the blades if they hit a solid object, or if the blade is out of balance or bent.

Before Inspecting or Servicing the Blades

1. Park the machine on a level surface, disengage the blade-control switch, move the motion-control levers outward to the NEUTRAL-LOCK position, and engage the parking brake.

Blade Service (continued)

2. Shut off the engine, remove the key, and wait for all moving parts to stop before leaving the operating position.
3. Disconnect the spark-plug wires from the spark plugs.

Checking for Bent Blades

The machine must be on a level surface for this procedure.

1. Raise the mower deck to the highest height-of-cut position.
2. While wearing thickly padded gloves, or other adequate hand protection, slowly rotate the blade into a position that allows you to measure the distance between the cutting edge and the level surface.

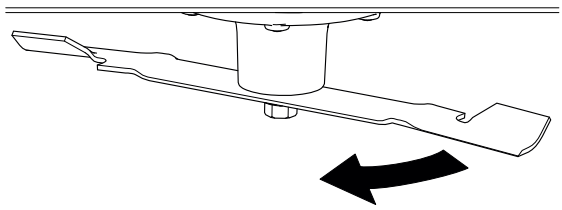

G513134

3. Measure from the tip of the blade to the level surface.

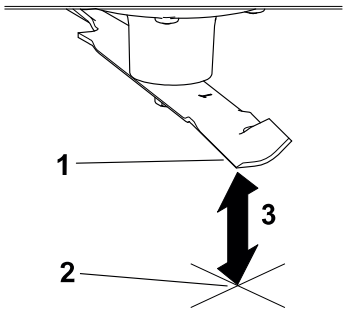

G513132

(1) Blade (in position for measuring)

(2) Level surface

(3) Measured distance between blade and the surface (A)

4. Rotate the same blade 180 degrees so that the opposite blade edge is now in the same position.

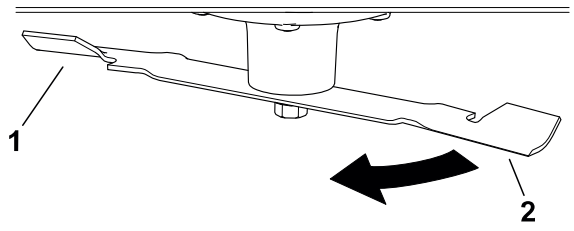

G513133

(1) Blade edge previous measured

(2) Opposite blade edge

5. Measure from the tip of the blade to the level surface.

Blade Service (continued)

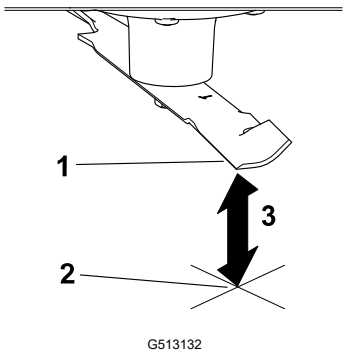

G513132

1. Blade (in position for measuring)
2. Level surface
3. Measured distance between blade and the surface (B)

6. If the difference between A and B is greater than 3 mm (1/8 inch), replace the blade.

   Note: If you replace the blade and the difference continues to exceed 3 mm (1/8 inch), the blade spindle could be bent. Contact an Authorized Service Dealer for service.

7. Repeat this procedure each blade.

Blade Service (continued)

Removing the Blades

1. Hold the blade end using a rag or thickly padded glove.
2. Remove the blade as shown.

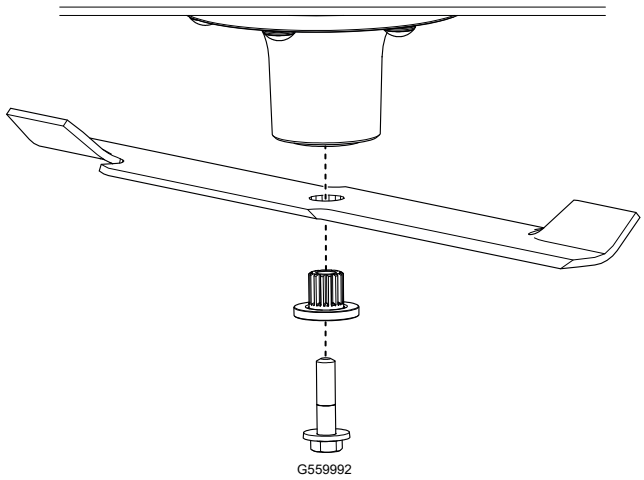
G559992

Sharpening the Blades

1. Use a file to sharpen the cutting edge at both ends of the blade. Ensure to maintain the original angle (1).

   Note: Remove the same amount of material from both cutting edges so that the blade retains its balance.

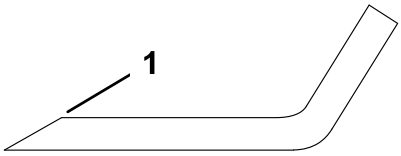

G000552s

2. Check the balance of the blade (1) by putting it on a blade balancer (2).

   Note: If the blade stays in a horizontal position, the blade is balanced and can be used.

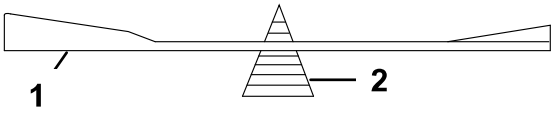

G000553s

   If the blade is not balanced, file some metal off the end of the sail area only.
3. Repeat this procedure until the blade is balanced.

Installing the Blades

⚠ WARNING ⚠

Operating a machine after incorrectly installing the blade assembly and/or not using genuine Exmark blade and blade hardware could allow a blade or blade component to be thrown out from under the deck, resulting in serious injury or death.

Always install genuine Exmark blades and blade hardware according to the instructions.

Blade Service (continued)

1. Apply copper-based lubricant or grease to the threads of the blade bolt as needed to prevent seizing.
2. Install the blade as shown.

   Note: The curved part of the blade must point upward toward the inside of the mower to ensure proper cutting.

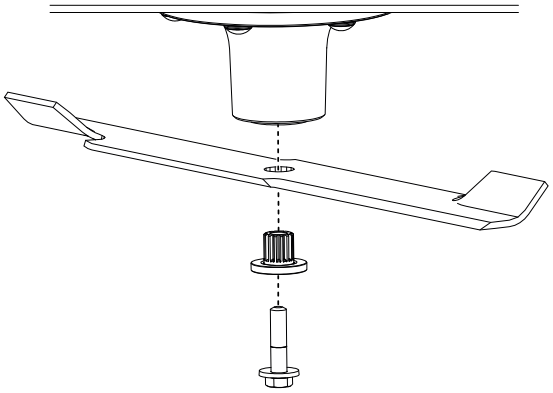
G559992

3. Torque the blade bolt to **75 to 81 N·m (55 to 60 ft-lb)**.

Leveling the Mower Deck

Ensure that the mower deck is level any time you install the mower deck or when you see an uneven cut on your lawn.

Preparing to Level the Mower Deck

1. Park the machine on a level surface, disengage the blade-control switch, move the motion-control levers outward to the NEUTRAL-LOCK position, and engage the parking brake.
2. Shut off the engine, remove the key, and wait for all moving parts to stop before leaving the operating position.
3. Ensure that the tires are inflated to the correct specifications and the caster wheels are facing straight forward.
4. Check the mower deck for bent blades; remove and replace any bent blades.
5. Raise the mower deck to the 76 mm (3 inch) height-of-cut setting.

Checking the Mower-Deck Level

1. Position the blades side-to-side.
2. Measure at locations Ⓐ and Ⓑ from a level surface to the cutting edge of the blade tips ①.

   The difference between the measurements should be no more than 5 mm (3/16 inch). If the measurement is larger, adjust the side-to-side level.

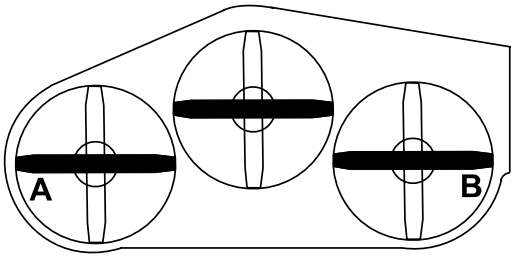

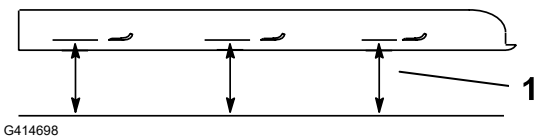

G414698

Leveling the Mower Deck (continued)

3. Position 1 blade front-to-rear.
4. Measure at locations (A) and (B) from a level surface to the cutting edge of the blade tips (1).

   The front blade tip should be 1.6 to 7.9 mm (1/16 to 5/16 inch) lower than the rear blade tip. If the measurement is not correct, adjust the front-to-rear level.

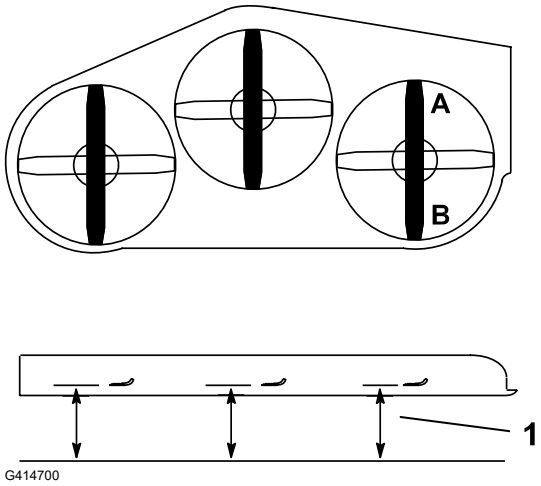

Leveling the Mower Deck

1. Set the anti-scalp rollers to the top holes or remove them completely for this.
2. For 60-inch decks:
   A. Raise the deck to the transport position.
   B. Slowly loosen the adjustment screw on the lift assist spring until the screw can be removed. Save this screw to install the lift assist spring later.

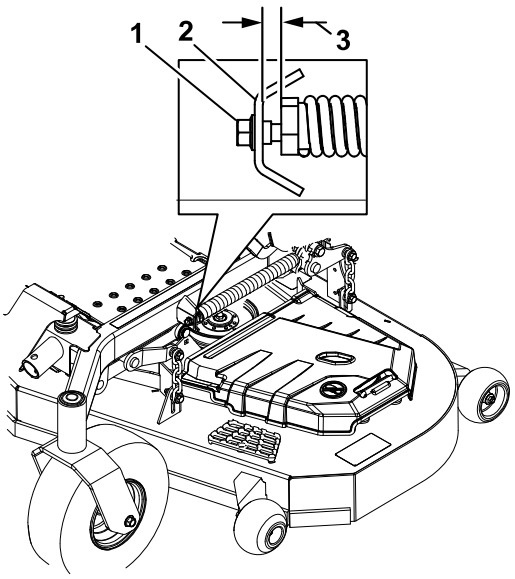

(1) Adjusting screw

(2) Bracket

(3) Set gap to 26-33 mm (1.02-1.28 inches)

3. Set the height-of-cut lever to the 76 mm (3 inch) position.

Leveling the Mower Deck (continued)

4. Place 2 blocks (1), each having a thickness of 6.7 cm (2.63 inches) under each side of the front edge of the deck.
5. Place 2 blocks (2), each having a thickness of 7.3 cm (2.88 inches), under each side of the rear edge of the deck.

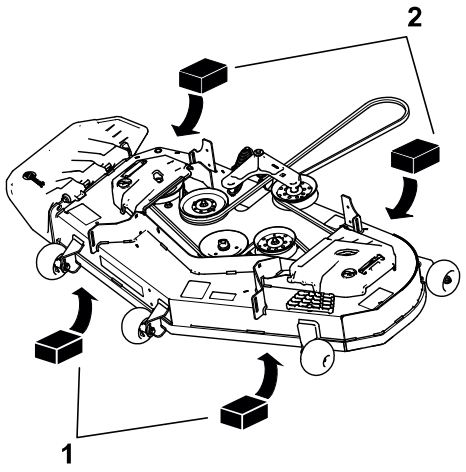

G561549

IMPORTANT

Do not place the blocks under the anti-scalp roller brackets.

6. Carefully rotate the blades side to side.
7. Loosen the lower fasteners securing the brackets to all 4 corners of the deck and ensure that the mower deck sits securely on all 4 blocks.

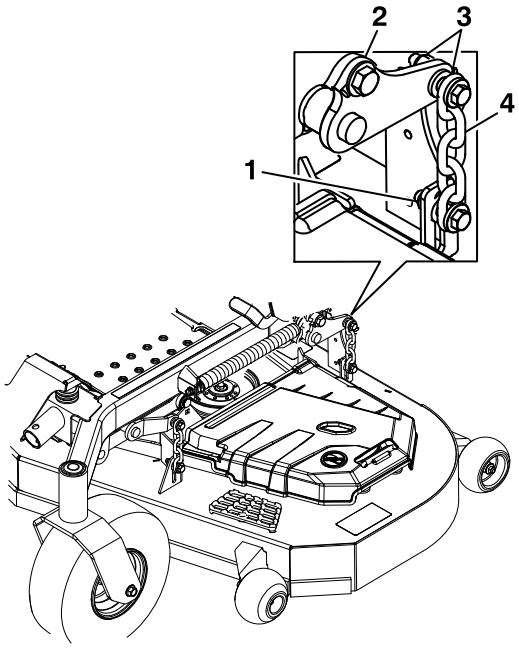

g410312S

(1) Leveling adjust locking nuts
(2) Deck lift arm
(3) Deck hanger
(4) Chain

8. Remove any slack from the deck brackets and ensure that the deck-lift foot lever is pushed back against the stop.

Leveling the Mower Deck (continued)

9. Tighten the fasteners.
10. Ensure that the blocks fit snugly under the deck edge and that all attachment bolts are tight.
11. Check the side-to-side level and front-to-rear level; repeat the procedure until the measurements are correct.
12. For 60-inch decks:
    A. Raise the deck to the transport position.
    B. Install the lift assist spring adjusting screw.
    C. Set the gap between the spring and the bracket to 26 to 33 mm (1.02 to 1.28 inches)

Adjusting the Parking Brake

Ensure that the parking brake is adjusted properly. Adjust the parking brake after the first 100 hours or whenever you remove or replace a brake component.

1. Park the machine on a level surface, disengage the blade-control switch, and engage the parking brake.
2. Shut off the engine, remove the key, and wait for all moving parts to stop before leaving the operating position.
3. Open the drive-wheel release valves.
4. Raise the rear of the machine up and support the machine with jack stands.
5. Test the brake and check each drive tire to ensure the brake engages and disengages properly.
6. If adjustment is necessary, disengage the parking brake and remove the cotter pin from the brake linkage shaft.

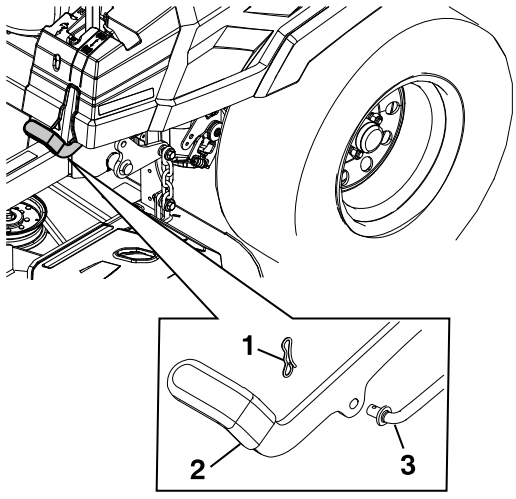

g410313S

(1) Cotter Pin
(2) Parking brake
(3) Brake linkage shaft

Adjusting the Parking Brake (continued)

7. Verify that the spring lengths are 44 mm (1-3/4 inches). If adjustment is necessary, turn the top nut clockwise to shorten and counterclockwise to lengthen.

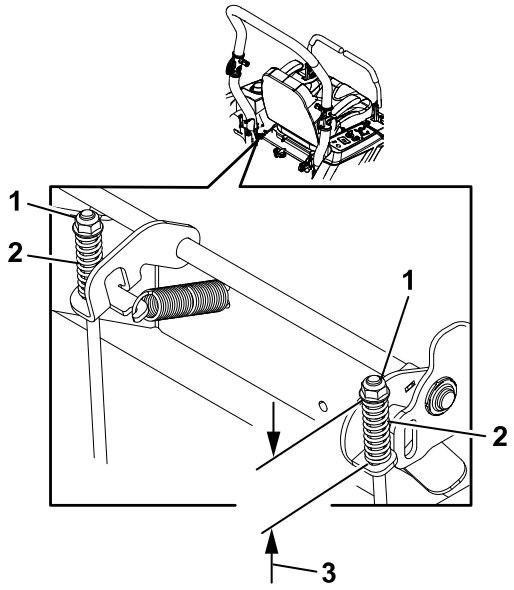

g410333S

(1) Top nut
(2) Spring
(3) 44 mm (1.75 inches)

8. Push the parking brake lever forward and down. Rotate the brake linkage shaft until the end aligns with the hole in the lever.
9. Insert the brake linkage shaft into the parking brake hole and secure with the cotter pin. Repeat as necessary.
10. Remove the jack stands.
11. Close the drive-wheel release valves.

Replacing the Grass Deflector

⚠ DANGER ⚠

An uncovered discharge opening allows objects to be thrown toward you or bystanders. Also, contact with the blade could occur. Thrown objects or blade contact will cause serious injury or death.

Do not operate the mower with the discharge deflector raised, removed, or altered unless a grass collection system or mulch kit is in place and working properly.

---

1. Park the machine on a level surface, disengage the blade-control switch, move the motion-control levers outward to the NEUTRAL-LOCK position, and engage the parking brake.

Replacing the Grass Deflector (continued)

2. Shut off the engine, remove the key, and wait for all moving parts to stop before leaving the operating position.
3. Remove the damaged or worn grass deflector and install a new deflector.

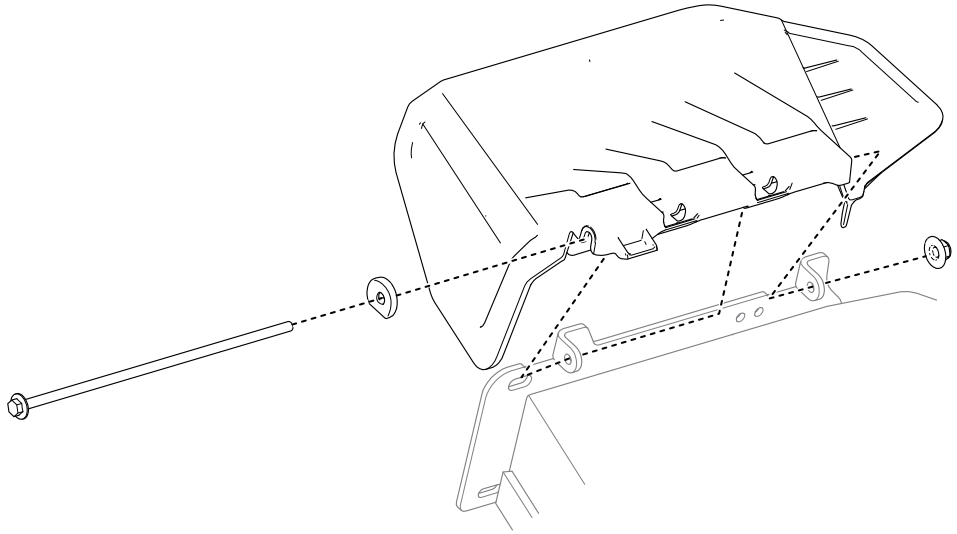

G560316

Brake Maintenance

Cleaning

Washing the Machine

1. Park the machine on a level surface, disengage the blade-control switch (PTO), and engage the parking brake.
2. Shut off the engine, remove the key, and wait for all moving parts to stop before leaving the operating position.
3. Clean the machine.

IMPORTANT

You can wash the machine with a mild detergent and water. Do not pressure-wash the machine. Avoid excessive use of water, especially near the drive system and engine. Pressure-washing can force dirt and water into critical parts, such as spindle bearings and electrical switches.

A. Remove grass clippings, dirt, and grime from the external parts of the entire machine, especially the engine.

B. Scrape any heavy buildup of grass and dirt from the underside of the mower, then wash the machine with a garden hose.

Washing the Machine (continued)

C. Run the machine with the PTO switch engaged and the engine at high idle for 2 to 5 minutes after washing.

Disposing of Waste

Engine oil, batteries, hydraulic fluid, and engine coolant are pollutants to the environment. Dispose of these according to your state and local regulations.

Storage Safety

- Park the machine on a level surface, disengage the drives, engage the parking brake, shut off the engine, remove the key, and wait for all moving parts to stop before leaving the operator's position.
- Wait for the machine to cool before servicing, adjusting, fueling, cleaning, or storing it.
- Clean grass and debris from the cutting unit, muffler, drives, grass catcher, and engine compartment to prevent fires.
- Clean up oil and fuel spills and remove fuel-soaked debris.
- Do not store the machine or fuel container where there is an open flame, spark, or pilot light, such as on a water heater or other appliance.

Preparing the Machine for Storage Over 30 Days

1. Park the machine on a level surface, disengage the blade-control switch, move the motion-control levers outward to the NEUTRAL-LOCK position, and engage the parking brake.
2. Shut off the engine, remove the key, and wait for all moving parts to stop before leaving the operating position. Allow the machine to cool before servicing, adjusting, fueling, cleaning, or storing.
3. Clean the machine.

IMPORTANT

You can wash the machine with a mild detergent and water. Do not pressure-wash the machine. Avoid excessive use of water, especially near the drive system and engine. Pressure-washing can force dirt and water into critical parts, such as spindle bearings and electrical switches.

   A. Remove grass clippings, dirt, and grime from the external parts of the entire machine, especially the engine.
   B. Scrape any heavy buildup of grass and dirt from the underside of the mower, then wash the machine with a garden hose.
   C. Run the machine with the PTO switch engaged and the engine at high idle for 2 to 5 minutes after washing.
4. Check the parking brake operation.

5. Grease the machine.
6. Check the tire pressure.
7. Charge the battery.
8. Check the condition of the cutting blades.
9. Prepare the fuel system.
   A. Add a petroleum-based fuel stabilizer/conditioner to the fuel in the tank. **Do not use an alcohol-based stabilizer (ethanol or methanol).**
   B. Run the engine to distribute conditioned fuel through the fuel system for 5 minutes.
   C. Shut off the engine, allow it to cool, and drain the fuel tank using a pump-type syphon or operate the engine until it shuts off.
   D. Dispose of fuel properly per local regulations.

IMPORTANT

Do not store fuel containing stabilizer/conditioner longer than the duration recommended by the fuel-stabilizer manufacturer.

10. Prepare the engine.
    A. Service the air cleaner.
    B. Change the engine oil; dispose of used oil per local regulations.
    C. Remove the spark plugs and pour 30 ml (2 tablespoons) of engine oil into the spark plug holes.
    D. Place a rag over the spark plug holes to catch any oil spray, then crank the engine and distribute the oil inside the cylinder.
    E. Install the spark plugs, but do not install the wires.
11. Remove the battery or disconnect the negative (-) battery cable.

    Note: Store the battery in a cool, dry location, where it will not be exposed to extreme temperatures or water. Keep the battery fully charged, especially in temperatures below 0°C (32°F).
12. Check and tighten all fasteners. Repair or replace any worn, damaged, or missing parts.
13. Paint all scratched or bare metal surfaces with paint available from your Authorized Service Dealer.
14. Store the machine in a clean, dry garage or storage area. Cover the machine to protect it and keep it clean.

Storing the Battery

Note: Follow the tips below to properly store the battery.

- If you are storing the machine for more than 30 days, remove the battery and charge it fully.
- Store it either on the shelf or on the machine.

- Leave the cables disconnected if the battery is stored on the machine.
- Store the battery in a cool atmosphere to avoid quick deterioration of the charge in the battery.
- To prevent the battery from freezing, ensure that it is fully charged.
- The specific gravity of a fully charged battery is 1.265 to 1.299.

Battery Storage Tips

If you are storing the battery outside the machine, do the following:

- Store the battery in a cool, dry area in an upright position.
- Do not stack batteries directly on top of each other, unless they are in cartons.
- Do not stack more than 3 batteries (only 2 if the battery type is commercial).
- Test a wet battery every 4 to 6 months and charge it, if necessary.
- Always test and charge the battery before installation.

The engine overheats.

Possible Cause	Corrective Action
The engine load is excessive.	Reduce the ground speed.
The oil level in the crankcase is low.	Add oil to the crankcase.
The cooling fins and air passages under the engine-blower housing are plugged.	Remove the obstruction from the cooling fins and air passages.
The air cleaner is dirty.	Clean or replace the air-cleaner element.
Dirt, water, or stale fuel is in the fuel system.	Contact an Authorized Service Dealer.

The starter does not crank.

Possible Cause	Corrective Action
The blade-control switch is engaged.	Disengage the blade-control switch.
The parking brake is disengaged.	Engage the parking brake.
The motion-control levers are not in the NEUTRAL-LOCK position.	Move the motion-control levers outward to the NEUTRAL-LOCK position.
The battery does not have a full charge.	Charge the battery.
The electrical connections are corroded or loose.	Check the electrical connections for good contact.
A fuse is blown.	Replace the fuse.
A relay or switch is damaged	Contact an Authorized Service Dealer.

The engine does not start, starts hard, or fails to keep running.

Possible Cause	Corrective Action
The fuel tank is empty.	Fill the fuel tank.
The fuel shutoff valve is closed.	Open the fuel shutoff valve.

Possible Cause	Corrective Action
The throttle and choke are not in the correct position.	Ensure the throttle control is midway between the SLOW and FAST positions, and the choke is in the ON position for a cold engine or the OFF position for a warm engine.
The oil level in the crankcase is low.	Add oil to the crankcase.
The choke (if applicable) is not on.	Move the choke lever to the ON position.
The air cleaner is dirty.	Clean or replace the air-cleaner element.
The seat switch is not functioning properly.	Check the seat switch indicator. Replace seat if needed.
The electrical connections are corroded, loose or are not working.	Check the electrical connections for good contact. Clean the connector terminals thoroughly with electrical contact cleaner, apply dielectric grease, and connect the terminals.
A relay or switch is not working.	Contact an Authorized Service Dealer
The spark plug is not working.	Clean, adjust or replace spark plug.
The spark-plug wire(s) is loose or disconnected.	Install the wire(s) on the spark plug.
The spark plug(s) is pitted, fouled, or the gap is incorrect.	Install a new, correctly gapped spark plug (s).
There is dirt in fuel filter.	Replace the fuel filter.
Dirt, water, or stale fuel is in fuel system.	Contact an Authorized Service Dealer.
There is incorrect fuel in the fuel tank.	Drain the tank and replace the fuel with the proper type.
The module is not working.	Replace the module.

The engine loses power.

Possible Cause	Corrective Action
The engine load is excessive.	Reduce the ground speed.
The air cleaner is dirty.	Clean the air-cleaner element.
The oil level in the crankcase is low.	Add oil to the crankcase.
The cooling fins and air passages under the engine blower housing are plugged.	Remove the obstruction from the cooling fins and air passages.
The spark plug(s) is pitted, fouled, or the gap is incorrect.	Install a new, correctly gapped spark plug (s).

Possible Cause	Corrective Action
The fuel-tank vent is blocked.	Contact an Authorized Service Dealer.
There is dirt in the fuel filter.	Replace the fuel filter.
Dirt, water, or stale fuel is in the fuel system.	Contact an Authorized Service Dealer.
There is incorrect fuel in the fuel tank.	Contact an Authorized Service Dealer.
There is low oil pressure.	Check the oil level. If the level is above "ADD" contact an Authorized Service Dealer.
There is high oil temperature.	Let the engine cool and check the oil level. If the level is above "ADD" contact an Authorized Service Dealer.

The machine does not drive.

Possible Cause	Corrective Action
The bypass valves are open.	Close the tow valves.
The traction belts are worn, loose, or broken.	Contact an Authorized Service Dealer.
The traction belts are off the pulleys.	Contact an Authorized Service Dealer.
The transmission has failed.	Contact an Authorized Service Dealer.
Broken or missing idler spring.	Replace the spring.
Hydraulic fluid level is too low or too hot.	Add hydraulic fluid to the reservoir or let it cool down.

The machine pulls left or right with both levers fully forward.

Possible Cause	Corrective Action
The tire pressure in the drive tires is not correct.	Check and adjust the tire pressure.
The tracking is not correct.	Adjust the tracking.

The machine vibrates abnormally.

Possible Cause	Corrective Action
The cutting blade(s) is/are bent or unbalanced.	Install new cutting blade(s).
The blade mounting bolt is loose.	Tighten the blade mounting bolt.

Possible Cause	Corrective Action
The engine mounting bolts are loose.	Tighten the engine mounting bolts.
The engine pulley, idler pulley, or blade pulley is loose.	Tighten the appropriate pulley.
The engine pulley is damaged.	Contact an Authorized Service Dealer.
The blade spindle is bent.	Contact an Authorized Service Dealer.
The belt is damaged.	Install a new belt.

The cutting height is uneven.

Possible Cause	Corrective Action
The blade(s) is not sharp.	Sharpen the blade(s).
A cutting blade(s) is/are bent.	Install a new cutting blade(s).
The mower deck is not level.	Level the mower deck from side-to-side and front-to-rear.
An anti-scalp roller (if applicable) is not set correctly.	Adjust the anti-scalp wheel height.
The underside of the mower deck is dirty.	Clean the underside of the mower deck.
The tire pressure is incorrect.	Adjust the tire pressure.
A blade spindle is bent.	Contact an Authorized Service Dealer.
The tips of adjacent blades are at an uneven cutting height. The blade tips should be even within 3/16 inch which is approximately one blade thickness.	Replace the blades, spindles and (or) check for damage to mower deck.

The blades do not rotate.

Possible Cause	Corrective Action
The deck belt is worn, loose or broken.	Install a new deck belt.
The deck belt is off of the pulley.	Install belt on the clutch and deck pulleys, idlers, and tensioning idler per routing decal on deck.
The power-takeoff (PTO) switch or PTO clutch is faulty.	Contact an Authorized Service Dealer.
Broken or missing idler spring.	Replace spring.
Deck belt not routed correctly.	Refer to belt routing decal.

The clutch will not engage.

Possible Cause	Corrective Action
The fuse is blown.	Replace the fuse. Check the coil resistance, battery charge, charging system, and wiring connections. Replace the fuse if necessary.
There is a low voltage supply at the clutch.	Check the coil resistance, battery charge, charging system, and wiring connections, and replace if necessary.
The coil is damaged.	Replace the clutch.
Inadequate current supply.	Repair or replace the clutch lead wire or electric system. Clean the connector contacts.
The rotor/armature air gap is too large.	Remove the shim or replace the clutch.

Chapter 8

Schematics

Electrical Diagram

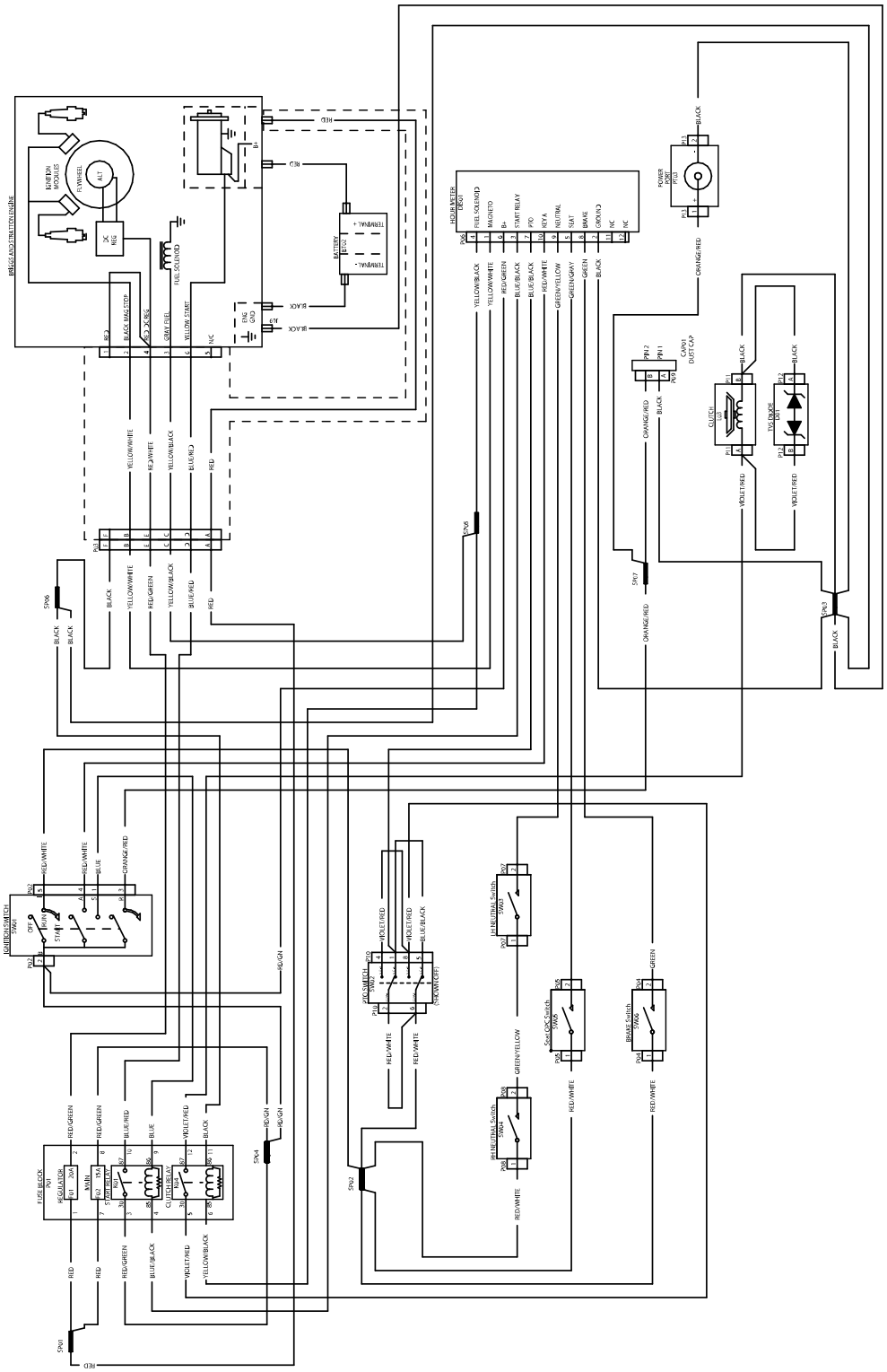

California Proposition 65 Warning Information

What is this warning?

You may see a product for sale that has a warning label like the following:



WARNING: Cancer and Reproductive Harm—www.p65Warnings.ca.gov.

What is Prop 65?

Prop 65 applies to any company operating in California, selling products in California, or manufacturing products that may be sold in or brought into California. It mandates that the Governor of California maintain and publish a list of chemicals known to cause cancer, birth defects, and/or other reproductive harm. The list, which is updated annually, includes hundreds of chemicals found in many everyday items. The purpose of Prop 65 is to inform the public about exposure to these chemicals.

Prop 65 does not ban the sale of products containing these chemicals but instead requires warnings on any product, product packaging, or literature with the product. Moreover, a Prop 65 warning does not mean that a product is in violation of any product safety standards or requirements. In fact, the California government has clarified that a Prop 65 warning "is not the same as a regulatory decision that a product is 'safe' or 'unsafe.'" Many of these chemicals have been used in everyday products for years without documented harm. For more information, go to https://oag.ca.gov/prop65/faqs-view-all.

A Prop 65 warning means that a company has either (1) evaluated the exposure and has concluded that it exceeds the "no significant risk level"; or (2) has chosen to provide a warning based on its understanding about the presence of a listed chemical without attempting to evaluate the exposure.

Does this law apply everywhere?

Prop 65 warnings are required under California law only. These warnings are seen throughout California in a wide range of settings, including but not limited to restaurants, grocery stores, hotels, schools, and hospitals, and on a wide variety of products. Additionally, some online and mail order retailers provide Prop 65 warnings on their websites or in catalogs.

How do the California warnings compare to federal limits?

Prop 65 standards are often more stringent than federal and international standards. There are various substances that require a Prop 65 warning at levels that are far lower than federal action limits. For example, the Prop 65 standard for warnings for lead is 0.5 µg/day, which is well below the federal and international standards.

Why don't all similar products carry the warning?

- Products sold in California require Prop 65 labelling while similar products sold elsewhere do not.
- A company involved in a Prop 65 lawsuit reaching a settlement may be required to use Prop 65 warnings for its products, but other companies making similar products may have no such requirement.
- The enforcement of Prop 65 is inconsistent.
- Companies may elect not to provide warnings because they conclude that they are not required to do so under Prop 65; a lack of warnings for a product does not mean that the product is free of listed chemicals at similar levels.

Why does Exmark include this warning?

Exmark has chosen to provide consumers with as much information as possible so that they can make informed decisions about the products they buy and use. Exmark provides warnings in certain cases based on its knowledge of the presence of one or more listed chemicals without evaluating the level of exposure, as not all the listed chemicals provide exposure limit requirements. While the exposure from Exmark products may be negligible or well within the "no significant risk" range, out of an abundance of caution, Exmark has elected to provide the Prop 65 warnings. Moreover, if Exmark does not provide these warnings, it could be sued by the State of California or by private parties seeking to enforce Prop 65 and subject to substantial penalties.


eXmark®