EXERPEUTIC®
THERAPEUTIC FITNESS

Traction Table

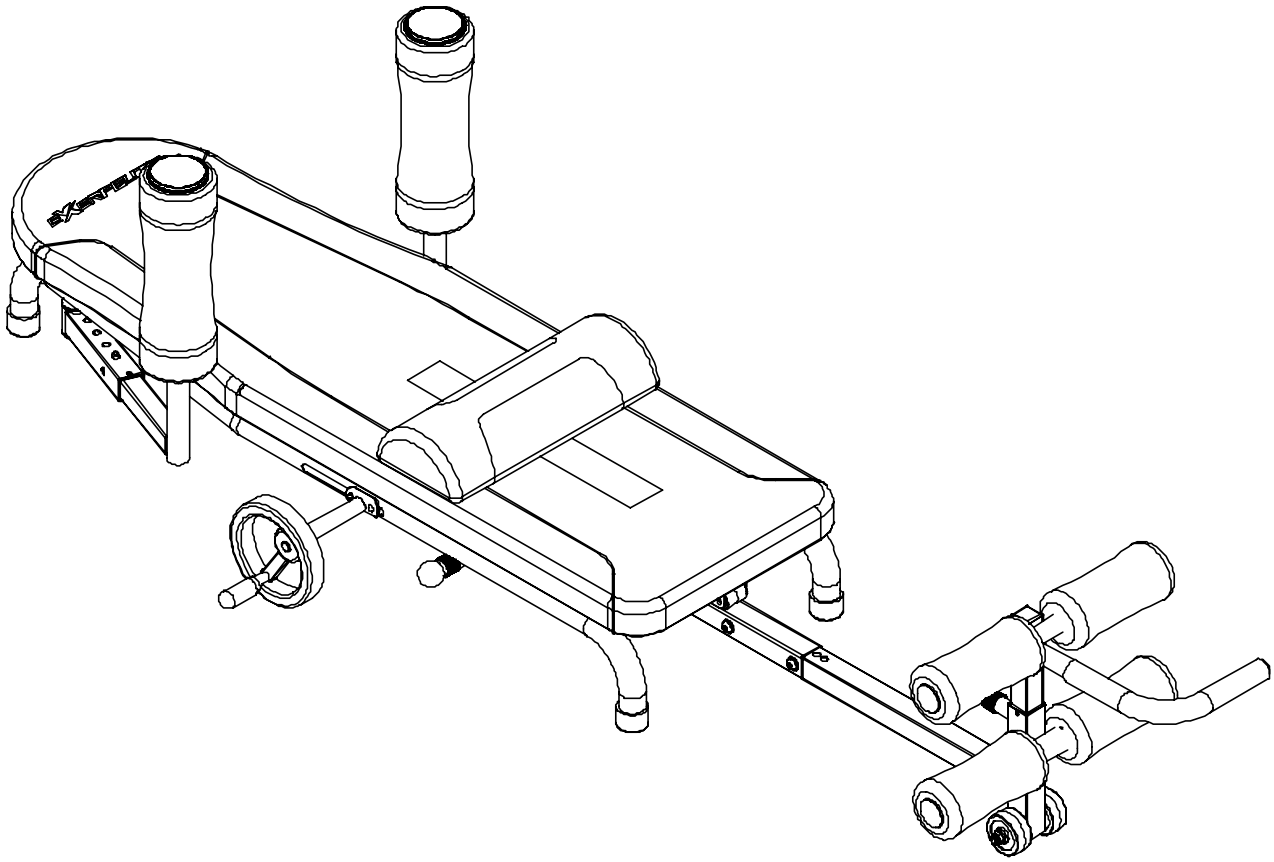

4510.5-09092022

OWNER'S MANUAL



PLEASE DO NOT RETURN THIS PRODUCT TO THE STORE.

Automatically set up an Email to CUSTOMER SERVICE by SCANNING this QR code with the Camera or a QR code scanner APP on your smart device.

See the Service Page for other methods of contacting Customer Support.

TABLE OF CONTENTS

SERVICE....2

IMPORTANT SAFETY GUIDELINES....3

LABEL PLACEMENT....5

OVERVIEW DRAWING....6

PARTS LIST....7

ASSEMBLY....8

OPERATIONS & ADJUSTMENTS....12

STORAGE....15

TRANSPORTING....16

LUBRICATION....17

WARRANTY....18

PARTS REQUEST FORM....19

IMPORTANT: FOR NORTH AMERICA ONLY

For damaged or defective product, questions, replacement parts or any other service support, please contact our customer service department using one of the below methods:

1. **Scan the QR code with the *camera or any QR code scanner app* on your smart device. This will bring you to a direct email to send to CUSTOMER SERVICE in the format shown below for your equipment.**

Fastest and Easiest method to set up a customer service

2. **Email: service@paradigmhw.com**
   a. **Response Time: 1-2 Business Days**

3. **Website: www.paradigmhw.com**

4. **Phone: Toll-Free: 1-844-641-7921**
   a. **Monday thru Friday (PST)**
   b. **Response time may vary via calling**
   c. **Refer to our email for the best response time**

Please have the following information ready when requesting for service:

- **Your name**
- **Shipping Address**
- **Phone number**
- **Model number**
- **Serial number**
- **Part number**
- **Proof of Purchase**

Paradigm Health & Wellness, Inc.
1189 Jellick Ave.
City of Industry, CA 91748, USA

Read all instructions before using the Traction Table. When using a Traction table, basic precautions should always be followed, including the following:

WARNING - To reduce the risk of injury to persons:

1. Make sure your equipment is correctly assembled before you use it.
2. Be sure all screws, nuts, and bolts are tightened prior to use.
3. Only one person should use the equipment at a time.
4. Never operate this equipment if it is not working properly, has been dropped, or damaged. If a problem is encountered, contact Customer Service before using the equipment again.
5. Always use this equipment on a clear and level surface.
6. For Household Use Only.
7. Do not use outdoors or near water.
8. Use the traction table only for its intended use as described in this manual. Do not use attachments not recommended by the manufacturer.
9. Do not wear loose clothing when using the equipment.
10. Keep all hands and feet away from any moving parts.
11. Never drop or insert any object into any opening.
12. Always wear shoes when using the traction table.
13. Close supervision is necessary when the traction table is used near children, or by or near invalids or disabled persons.
14. Listen to your body. It is recommended that you rotate up and down slowly. Dizziness might occur if you come up too fast.
15. If at any time you feel faint, light-headed, or dizziness while operating the equipment, stop exercising immediately. You should also stop exercising if you are experiencing pain or any discomfort.
16. This appliance is not intended for use by persons with reduced physical, sensory or mental capabilities, or lack of experience and knowledge, unless they have been given supervision or instruction concerning use of the appliance by a person responsible for their safety. Keep children under the age of 13 away from this machine.
17. Wait 2 hours after eating before using the traction table. If you start feeling nauseous, return to the upright position slowly.
18. For any problems, contact Customer Service. Servicing should be performed by an authorized service representative. Our contact number is on the service page.
19. **WARNING:** - Risk of Personal Injury - Consult with your personal physician to see if traction equipment is appropriate for you. This is especially important for people with pre-existing health problems. Do not use this equipment without your physician's approval.
20. **WARNING:** - Risk of Personal Injury – Do not allow children to use this machine.
21. **WARNING:** - Risk of Personal Injury - Keep children under the age of 13 away from the machine while in use.
22. **WARNING:** - Risk of Personal Injury – Keep body parts, hair, loose clothing, and jewelry clear of all moving parts.

23. **WARNING:**- Risk of Personal Injury - Tilt-back slowly when inverting. Failure to comply could result in serious bodily injury.
24. **WARNING:**- Risk of Personal Injury - Do not attempt to service the unit yourself. Discontinue use and contact customer service.
25. **WARNING:** - To Reduce The Risk Of Personal Injury - Read And Understand All The Instructions Before Using The Traction Table.

Do not use this equipment if you have any of the following conditions or ailments:

- Pregnancy
- Extreme obesity
- Middle ear infection
- Hiatus hernia or Ventral hernia
- Glaucoma, retinal detachment or conjunctivitis
- Use of anticoagulants including Aspirin in high doses.
- Spinal injury, Cerebral Sclerosis, or acutely swollen joints
- Heart or circulatory disorders for which you are being treated
- High blood pressure, Hypertension, Recent stroke or Transient Ischemic attack
- Bone weaknesses including Osteoporosis, Unhealed fractures, Modular pins, or surgically implanted orthopedic supports.

Do not exceed the maximum rated weight (load) and maximum rated user height:

The Maximum Weight Capacity for this product is 300lbs / 136kg.

The Maximum Height Capacity for this product is 6 feet 6 inches / 198cm.

Retain this owner's manual and keep the original purchase receipt for future reference.

SAVE THESE GUIDELINES

LABEL PLACEMENT

This drawing indicates the locations of the warning labels found on your product. If a label is missing, illegible or is removed, contact Customer Service to request a complimentary replacement label.

UNDER PENALTY OF LAW THIS TAG NOT TO BE REMOVED EXCEPT BY THE CONSUMER	NOTICE THIS ARTICLE MEETS THE FLAMMABILITY REQUIREMENTS OF CALIFORNIA BUREAU OF HOUSEHOLD GOODS AND SERVICES TECHNICAL BULLETIN 117-2013. CARE SHOULD BE EXERCISED NEAR OPEN FLAME OR WITH BURNING CIGARETTES.
ALL NEW MATERIAL CONSISTING OF 100% POLYURETHANE FOAM PAD	THE UPHOLSTERY MATERIALS IN THIS PRODUCT: _ CONTAIN ADDED FLAME RETARDANT CHEMICALS _X_CONTAIN NO ADDED FLAME RETARDANT CHEMICALS
REG.NO. PA42274(CN)	THE STATE OF CALIFORNIA HAS UPDATED THE FLAMMABILITY STANDARD AND DETEMINED THAT THE FIRE SAFETY REQUIREMENTS FOR THIS PRODUCT CAN BE MET WITHOUT ADDING FLAME RETARDANT CHEMICALS.THE STATE HAS INDENTIFIED MANY FLAME RETARDANT CHEMICALS AS BEING KNOWN TO, OR STRONGLY SUSPECTED OF, ADVERSELY IMPACTING HUMAN HEALTH OR DEVELOPMENT.
Certification is made by the manufacture that the materials in this article are described in accordance with law	
MADE BY PARADIGM HEALTH & WELLNESS, INC. 1189 Jellick Ave. City of Industry, CA 91748, USA	
Date of Delivery _____	
MADE IN CHINA	

EXERPEUTIC	For customer assistance, Monday - Friday: Pour le service a la clientèle composer le, lundi à vendredi: Para servicios al cliente, llame al, lunes a viernes:
	1-844-641-7921 8 am - 5 pm PST

Model#4510

UPC CODE

SERIAL NUMBER

Serial number / Numéro de série / Número de serie:
MADE IN CHINA / FABRIQUÉ EN CHINE / HECHO EN CHINA

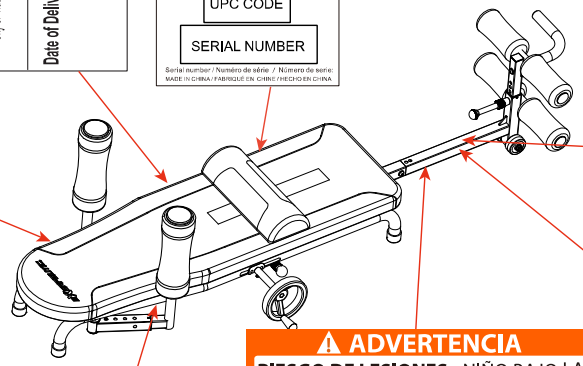

Not to be removed until delivered to the consumer
This label is affixed in compliance with Provincial Law
This article contains NEW MATERIAL ONLY
Made by reg. no. 90T-1264507
Content: Polyurethane Foam

Ne pas enlever avant la livraison au consommateur
Cette étiquette est apposée conformément aux lois provinciales.
Entièrement fabriqué de MATÉRIAUX NEUFS
No d'enregistrement du fabricant 09T-1264507
Contenu : mousse de polyuréthane

No se debe quitar hasta la entrega al cliente
Se colocó esta etiqueta para cumplir con leyes provinciales.
Este artículo SOLO CONTIENE MATERIALES NUEVOS.
Fabricado con número de registro 90T-1264507.
Contenido: Espuma de poliuretano

⚠ ADVERTENCIA

Capacidad de altura y peso máximo para este producto on 198 cm y 136 kg.

⚠ WARNING / AVERTISSEMENT

Max. Weight: 300 lbs. & Max. Height: 6'6". Le poids Maximum et hauteur pout ce produit est 136 kgs / 198 cm.

⚠ ADVERTENCIA

RIESGO DE LESIONES - NIÑO BAJO LA EDAD 13 MANTENER LEJOS DE ESTA MAQUINA EN TODO MOMENTO.

⚠ WARNING

RISK OF INJURY-KEEP CHILDREN UNDER THE AGE OF 13 AWAY FROM THIS MACHINE AT ALL TIMES.

⚠ AVERTISSEMENT

RISQUE DE BLESSURE-GARDEZ LES ENFANTS DE MOINS DE 13 ANS LOIN DE LA MACHINE.

This product contain composite wood that complies with phase 2 of the ATCM.
Fabricator:
Deqing Shengqiang Wood, Zhongguan Industrial Zone
Deqing County 313220 China
Fabricated date: mm/yyyy

Ce produit contient du bois composite conforme à la phase 2 de la mesure ATCM.
Fabricant:
Deqing Shengqiang Wood, Zhongguan Industrial Zone
Deqing County 313220 China
Deqing County 313220 China
Date fabriqué: mm/yyyy

Este producto contiene compuestos de madera que cumpla con la fase 2 de la ATCM.
Fabricante:
Deqing Shengqiang Wood, Zhongguan Industrial Zone
Deqing County 313220 China
Deqing County 313220 China
Fabricado fecha: mm/yyyy

OVERVIEW DRAWING

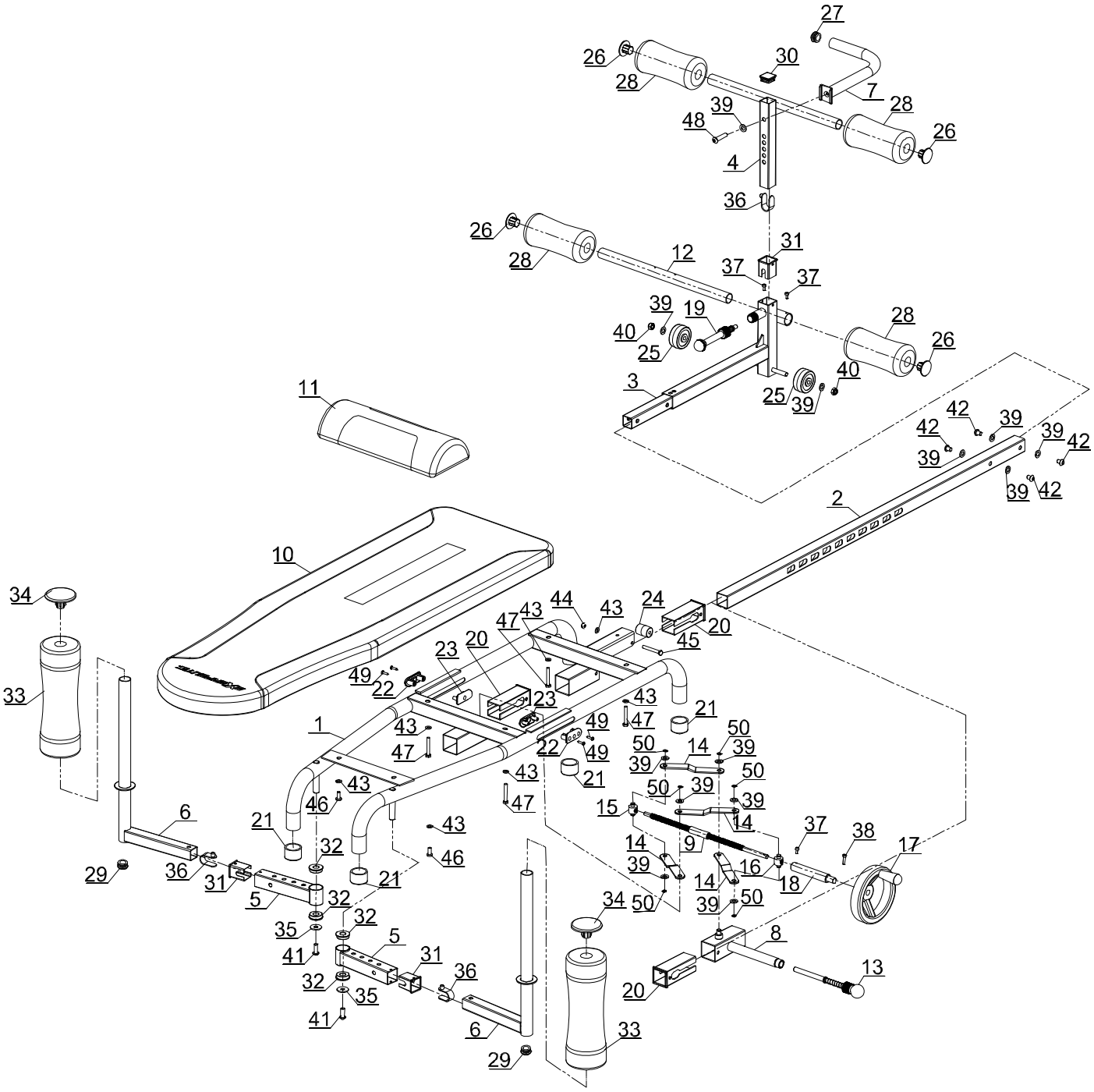

PARTS LIST

No.	Description	Qty
1	Main Frame	1
2	Adjustable Boom	1
3	Heel Holder Boom	1
4	Adjustable Heel Holder	1
5	Swing Arm	2
6	Adjustable Arm	2
7	Transport Handle	1
8	Fixed Bracket	1
9	Drive Screw	1
10	Backrest	1
11	Lumbar Pad	1
12	Heel Holder Tube	1
13	Height Adjustment Pin	1
14	Metal Plate	4
15	Threaded Pin Joint	2
16	Left-Hand Axle Cover	1
17	Crank Wheel	1
18	Axle	1
19	Pop Pin	1
20	Bushing	3
21	Foot Pad	4
22	Regulator Outer Bracket	2
23	Regulator Inner Bracket	2
24	Alignment Wheel	1
25	Wheel	2

No.	Description	Qty
26	End Cap	4
27	End Cap	1
28	Foot Foam Rollers	4
29	End Cap	2
30	Square End Cap	1
31	Bushing	3
32	Swing Arm Bushing	4
33	Arm Pit Foam Rollers	2
34	End Cap	2
35	Flat Washer Φ20*Φ8.5*2.0	2
36	Snap Buttons	3
37	Round Head Hex Bolt M4*9	3
38	Round Head Hex Bolt M4*12	1
39	Flat Washer Φ16*Φ8.5*1.5	13
40	Nylon Nut M8	2
41	Hex Bolt M8*20	2
42	Hex Bolt M8*12	4
43	Flat Washer Φ12*Φ6.5*1.5	7
44	Nylon Nut M6	1
45	Hex Screw M6*45	1
46	Phillips Screw M6*15	2
47	Hex Screw M6*40	4
48	Hex Bolt M8*35	1
49	Self-Tapping Phillips Screw ST3.8*16	4
50	Retaining Ring	6

Hardware:

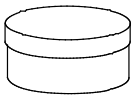

Grease 1PC

Tool:



3mm Allen Wrench 1PC



6mm Allen Wrench 1PC

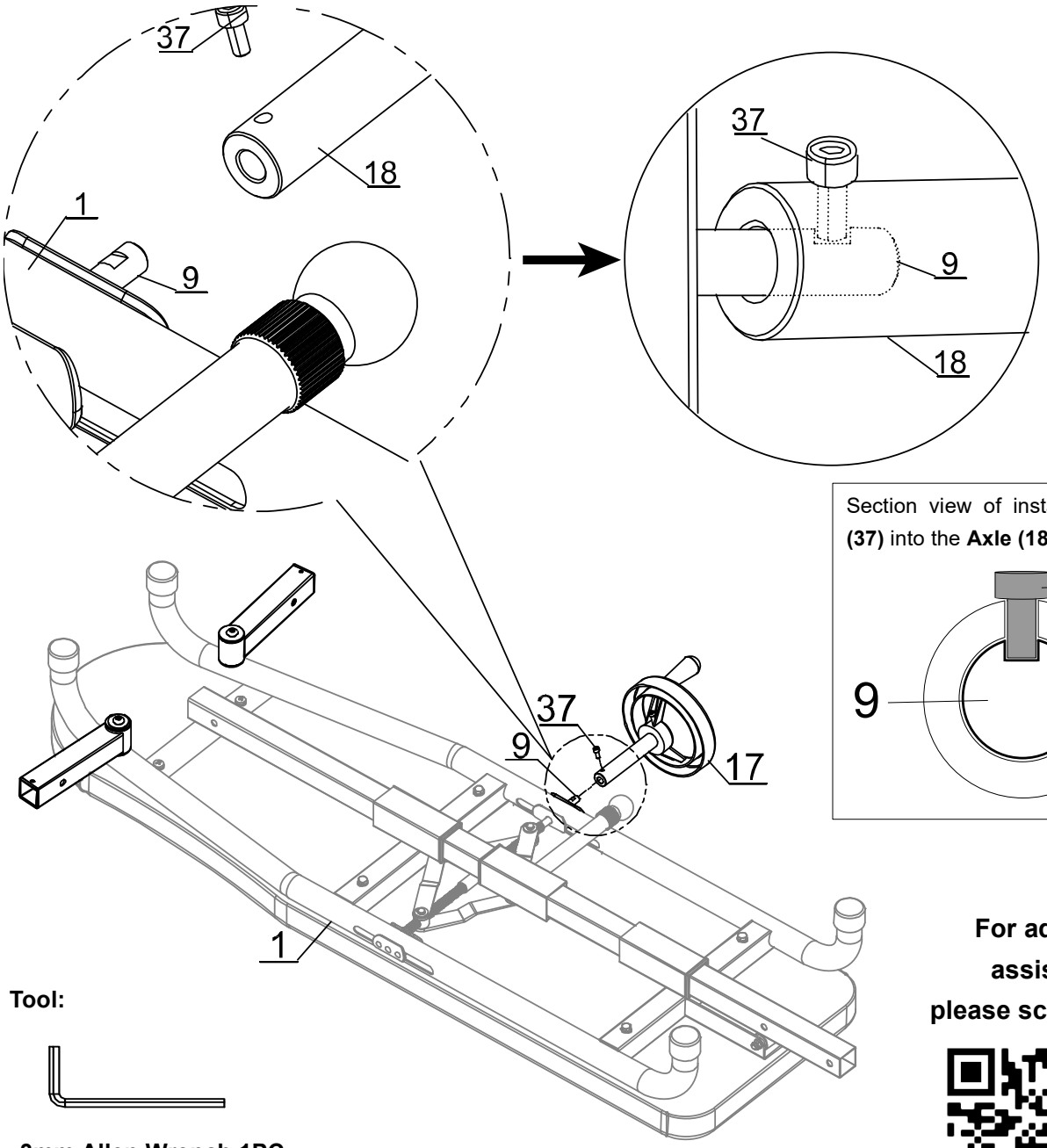

Section view of installing **Hex Bolt (37)** into the **Axle (18)**

Figure A

Tool:

3mm Allen Wrench 1PC

For additional assistance, please scan QR code

Step 1

Hardware Removal

1A. Remove one **Round Head Hex Bolt (37)** from the **Axle (18)** by using the **3mm Allen Wrench** provided.

Installing the Crank Wheel

1B. Insert **Crank Wheel (17)** onto the **Drive Screw (9)** on the **Main Frame (1)** and tighten with one **Round Head Hex Bolt (37)** by using the **3mm Allen Wrench** provided.

NOTE: Make sure the **Round Head Hex Bolt (37)** fits into the flat spot on **the Drive Screw (9).** Please see **Figure A.**

NOTE: Tilt the handle on the **Crank Wheel (17)** to use handle**.** To put it away, pull the handle outward and tilt it into th**e Crank Wheel (17).**

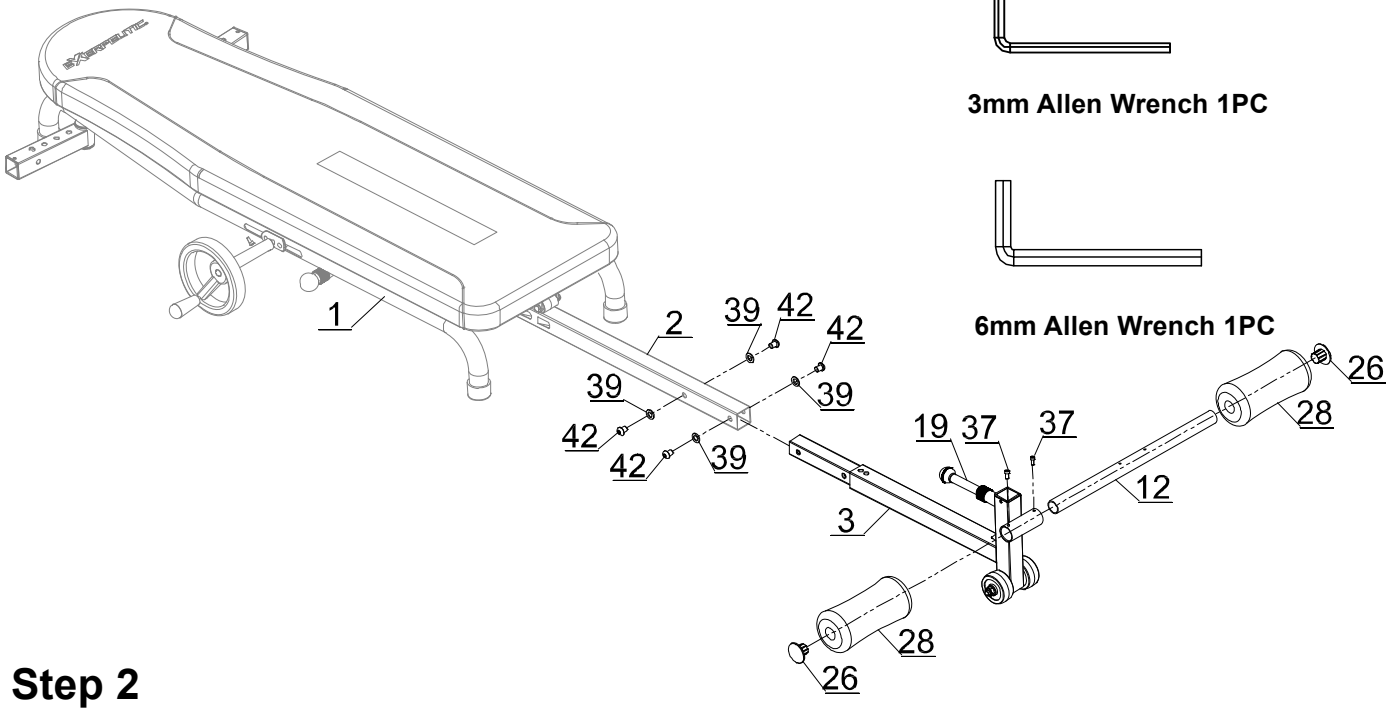

Step 2

Hardware Removal

2A. Remove four **Hex Bolts (42)** and four **Flat Washers (39)** from the **Adjustable Boom (2)** by using the **6mm Allen Wrench** provided.

2B. Remove two **Hex Bolts (37)** from the **Heel Holder Tube (12)** by using the **3mm Allen Wrench** provided.

Installing the Heel Holder & Foot Foam Rollers

2C. Insert the **Heel Holder Boom (3)** onto the **Adjustable Boom (2)** and tighten with four **Hex Bolts (42)** and four **Flat Washers (39)** by using the **6mm Allen Wrench** provided.

2D. Insert the **Heel Holder Tube (12)** onto the hole on the rear of the **Heel Holder Boom (3).** Align the hole and tighten with two **Hex Bolts (37)** by using the **3mm Allen Wrench** provided. Insert two **Foot Foam Rollers (28)** and two **End Caps (26)** onto the **Heel Holder Tube (12).**

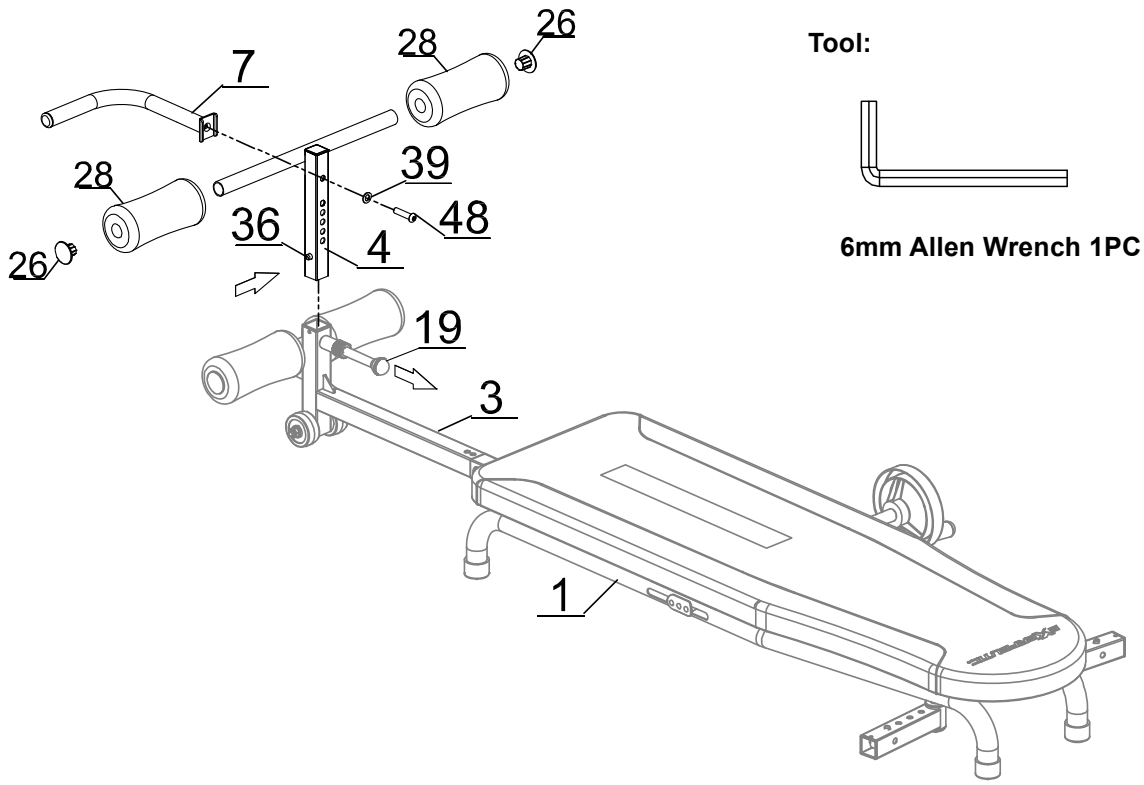

Tool:

6mm Allen Wrench 1PC

Step 3

Hardware Removal

3A. Remove one **Hex Bolts (48)** and one **Flat Washer (39)** from the **Transportation Handle (7).**

Installing the Adjustable Heel Holder

3B. Depress the **Snap Button (36)**, pull up the **Pop Pin (19)** and insert the **Adjustable Heel Holder (4)** onto **Heel Holder Boom (3).** Attach the **Transportation Handle (7)** onto the **Adjustable Heel Holder (4)** and tighten with one **Hex Bolts (48)** and one **Flat Washers (39)** by using **6mm Allen Wrench** provided.

Installing the Foam Roller

3C. Insert two **Foam Rollers (28)** onto the **Adjustable Heel Holder (4)** and attach two **End Caps (26)** onto both ends of the **Adjustable Heel Holder (4).**

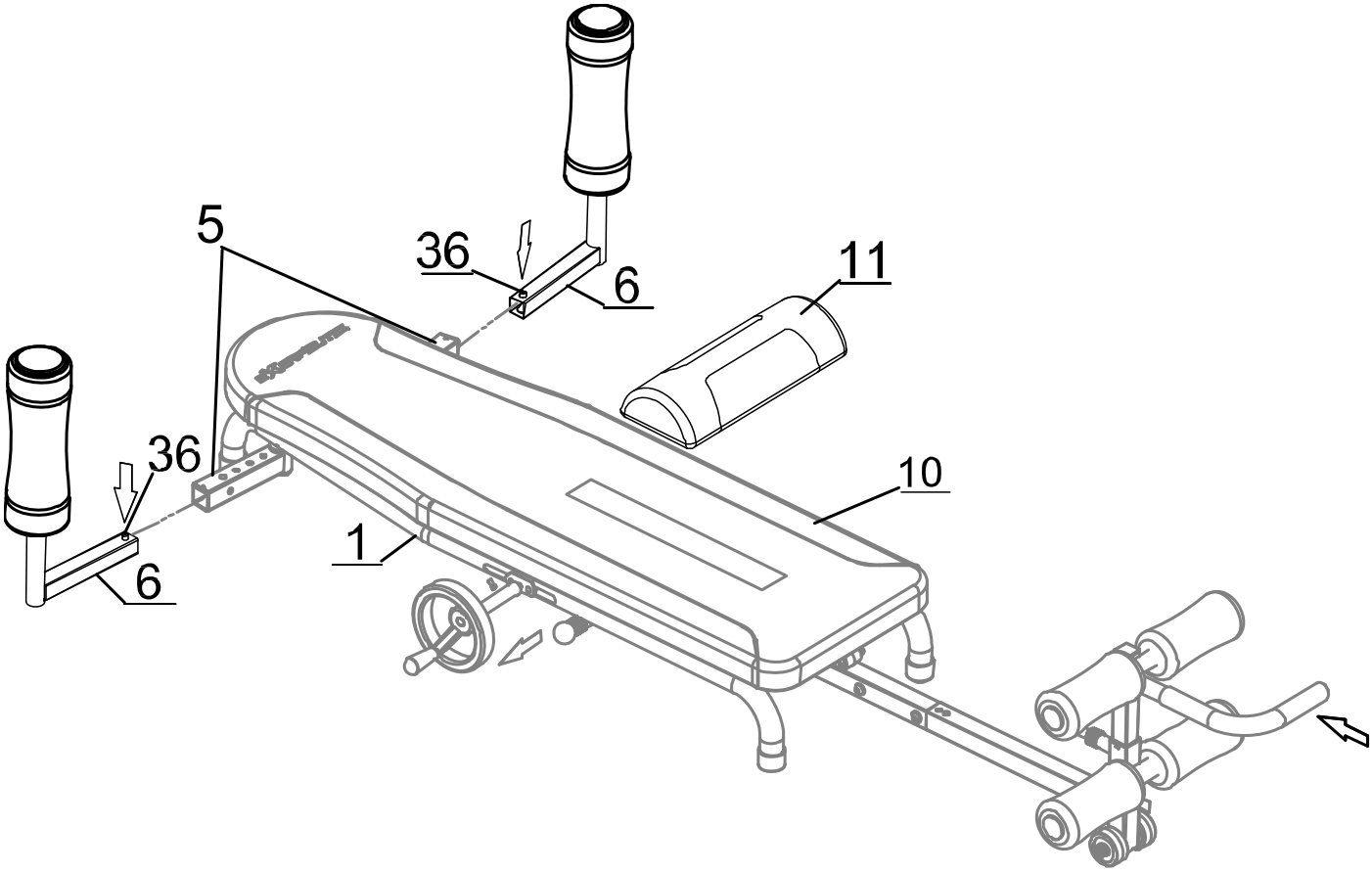

Step 4

Installing the Adjustable Arm

4A. Install the **Adjustable Arm (6)** onto the **Main Frame (1).** Depress **Snap Button (36)** and insert the **Adjustable Arm (6)** into the **Swing Arm (5)** Adjust the **Adjustable Arm (6)** to the suitable position.

4B. Attach the **Lumbar Pad (11)** on the Velcro strip on the **Backrest (10).** You can adjust the position of vertically or horizontally along the Velcro strip.

OPERATIONS & ADJUSTMENTS

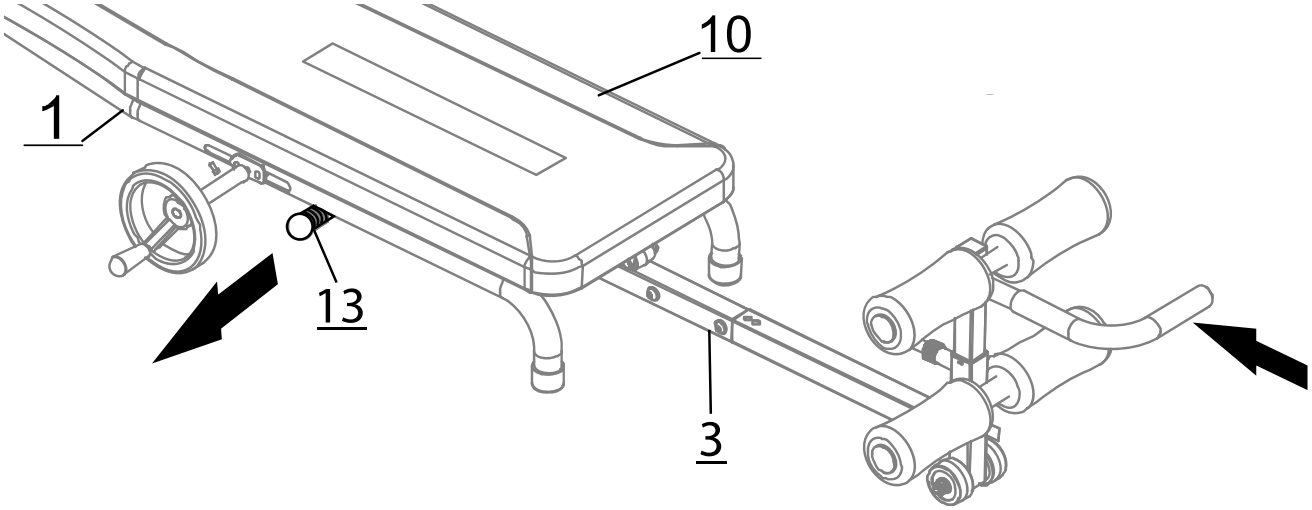

How to Adjusting Table to Load In

Pull out the **Height Adjustment Pin (13)** and simultaneously push the **Heel Holder Boom (3)** into the **Main Frame (1)** all the way in.

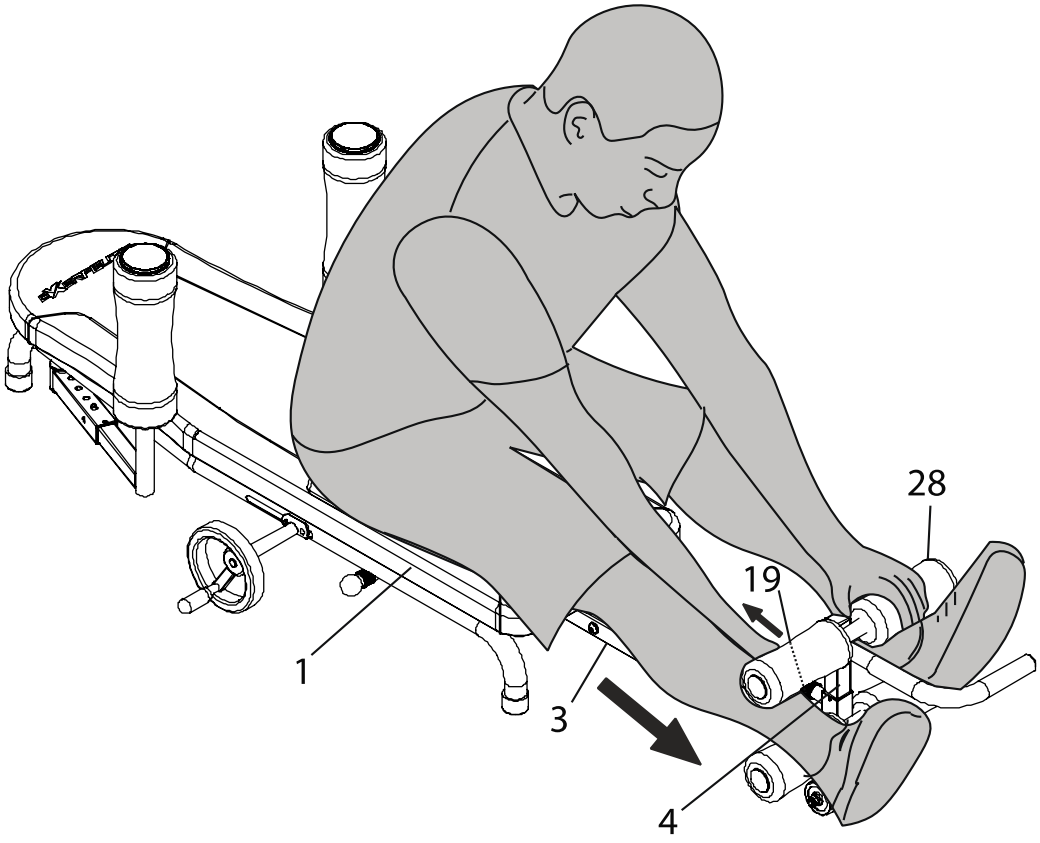

Adjusting Heel Holders

1. Sit on the **Main Frame (1),** facing the **Adjustable Heel Holder (4).** Extend the **Heel Holder Boom (3)** by hand to match the length of your leg.

2. Pullout the **Pop Pin (19),** lift up the **Adjustable Heel Holder (4)** and slip your ankles in between the **Foot Foam Rollers (28).** Pull the **Pop Pin (19)** and press down on the **Adjustable Heel Holder (4)** until it is snug, release the **Pop Pin (19)** and make sure it is Locked.

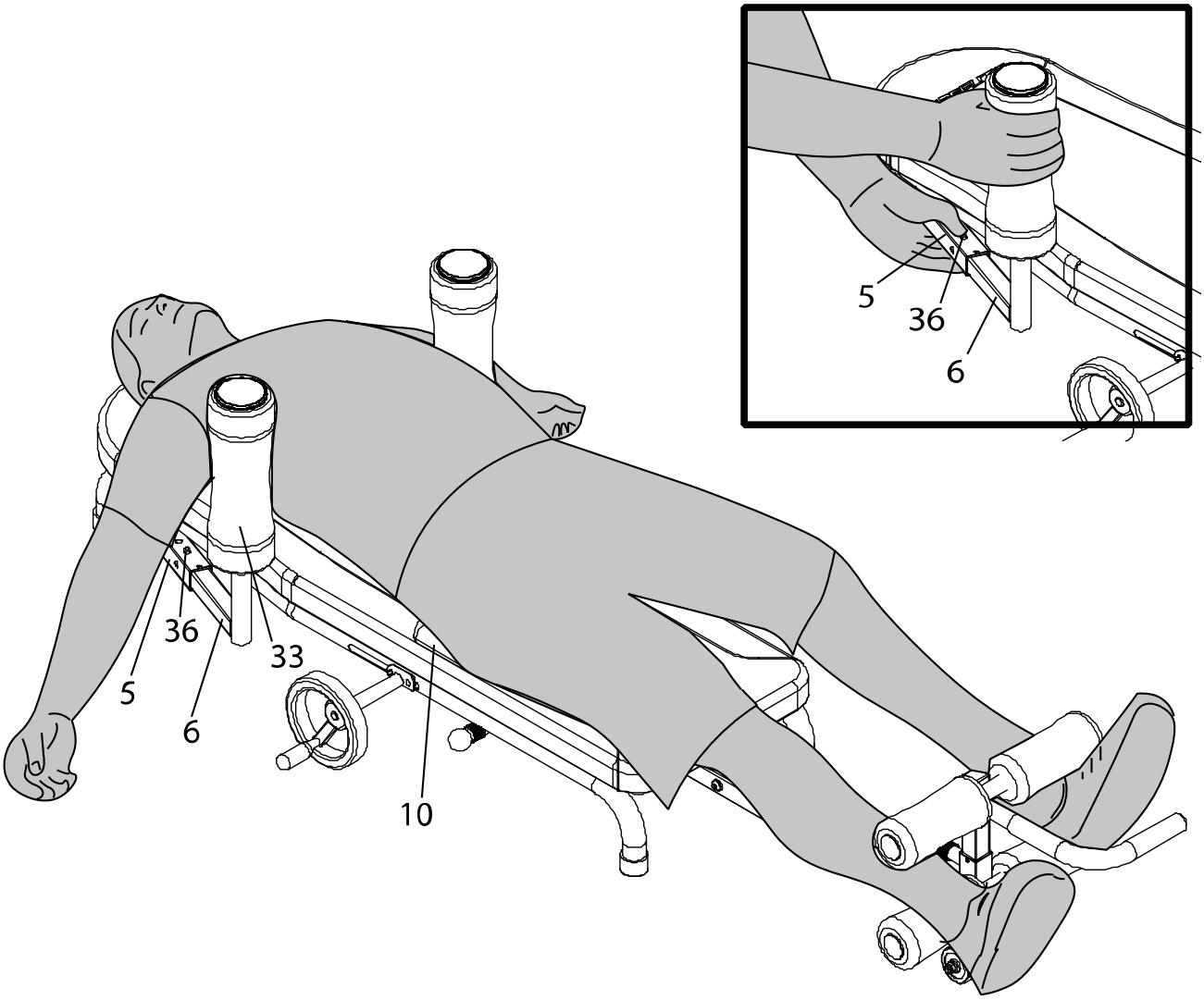

Adjusting Foam Rollers

1. With your feet locked into place, lay on the **Backrest (10).** Lift your arms and wrap them around the **Arm Pit Foam Rollers (33).** If they are too high or low, get off the table and adjust them at this time.

2. Depress the **Snap Button (36)** on the **Adjustable Arm (6)** and insert it inward or pull it outward on the **Swing Arm (5)** to your desired position using the 4 holes available. Once adjusted, check them again to make sure they are properly placed for your arm.

OPERATIONS & ADJUSTMENTS

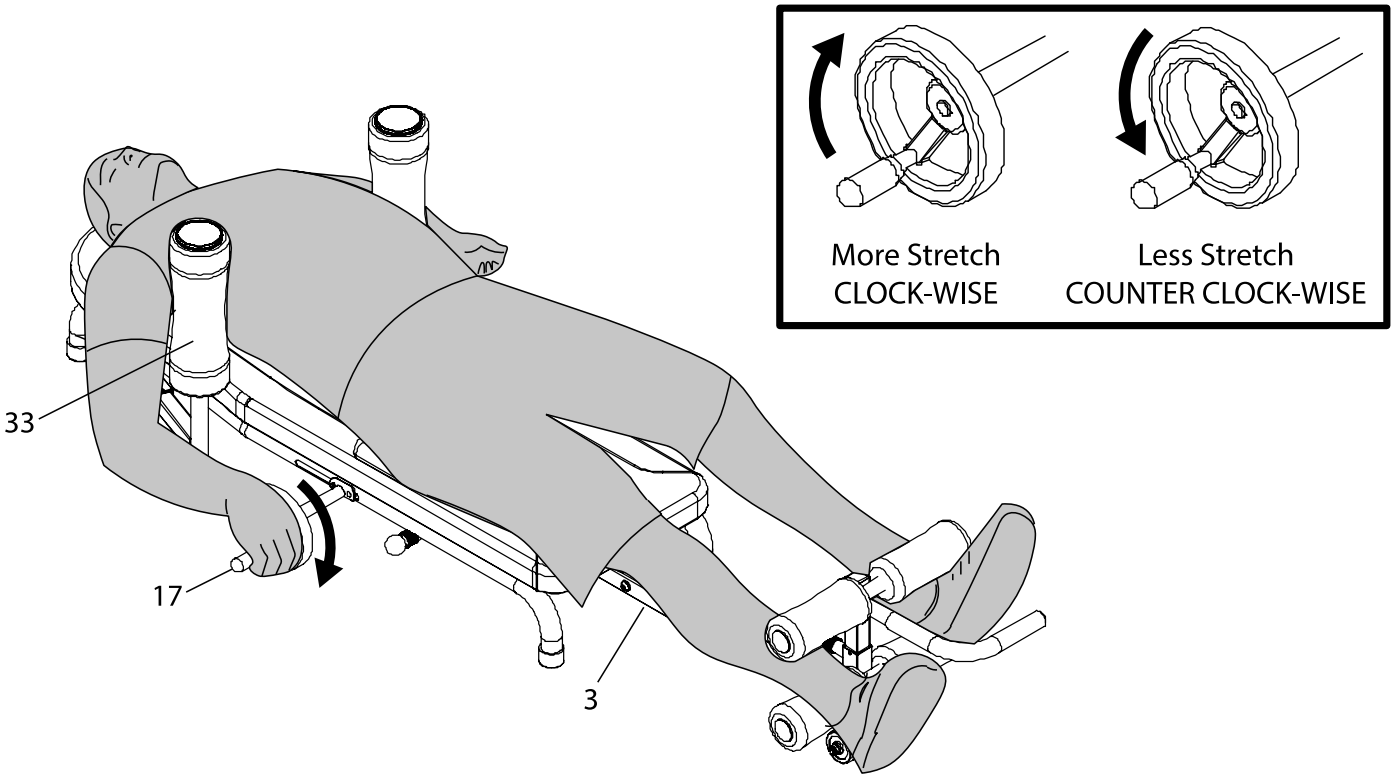

How to Stretch Back Muscles

1. Keep your right arm wrapped around the **Arm Pit Foam Roller (33)**, reach for the **Crank Wheel (17),** and pull the handle outward. Rotate the **Crank Wheel (17) CLOCK-WISE,** or towards your feet, to extend the **Heel Holder Boom (3)** and stretch your back. Continue to rotate the **Crank Wheel (17)** slowly until you reach a comfortable stretch. **DO NOT** excessively stretch your back. Over time you can gradually increase the amount of stretching.

2. To dismount the table, turn the **Crank Wheel (17) COUNTER CLOCKWISE,** or towards your head, to return the **Heel Holder Boom (3) OR** you can lift your arms out of the **Arm Pit Foam Rollers (33)** then lay there for a few minutes.

3. After a 5-minute period, you can undo your feet and rise. You may have to rollover off the side of the table to stand up.

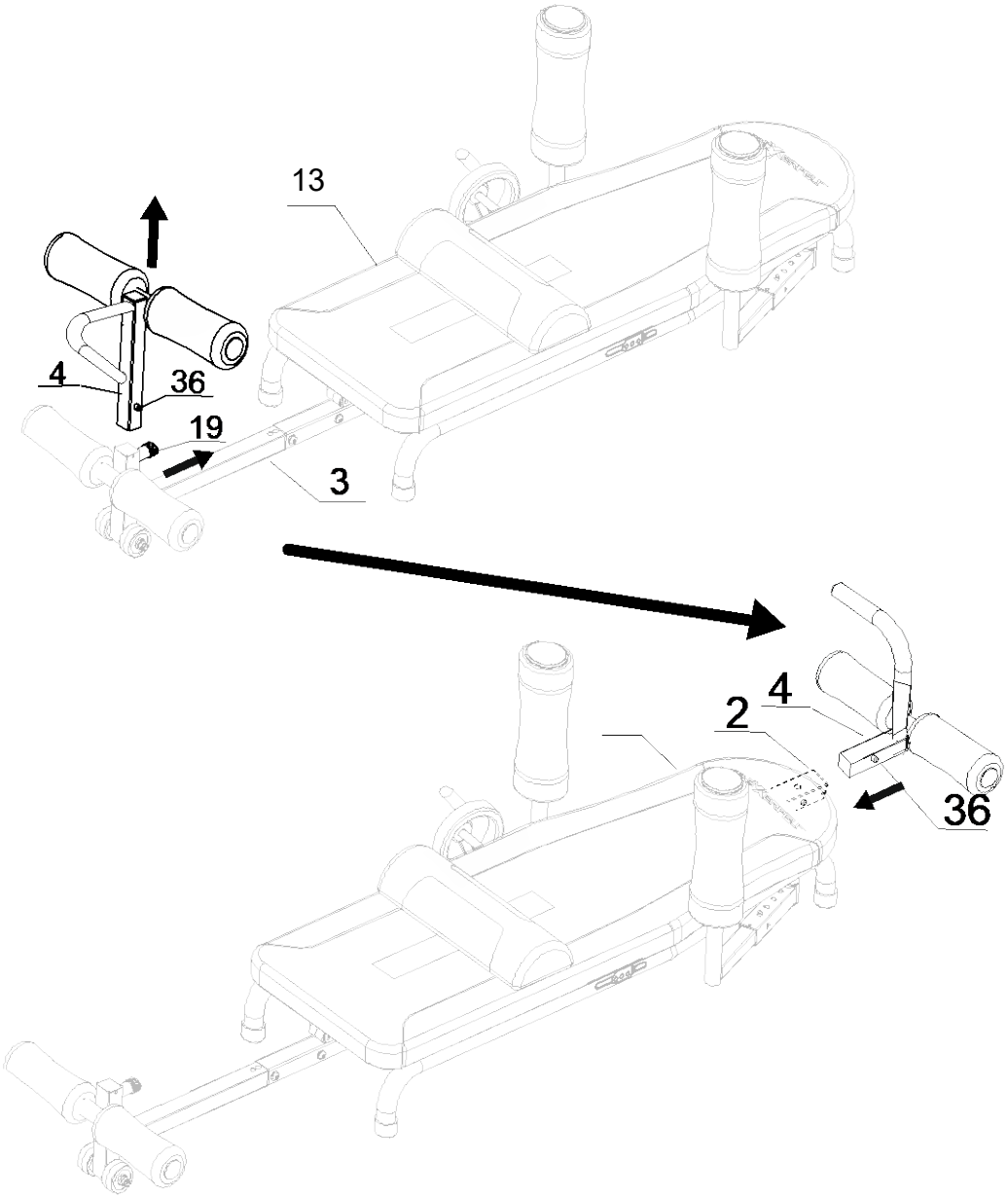

Putting Traction Table into Storage Mode

1. Pull the **Height Adjustment Pin (13)** out and hold while simultaneously pushing the **Heel Holder Boom (3)** into the **Main Frame (1)** until fully inserted**.**
2. Pull the **Pop Pin (19)** out and hold to pull the **Adjustable Heel Holder (4)** out of the **Heel Holder Boom (3).**
3. Take the **Adjustable Heel Holder (4)** to the top of the **Backrest (10).** Press down on the **Snap Button (36)** and insert the **Adjustable Heel Holder (4)** into the top of the **Adjustable Boom (2)** with the **Transport Handle (7)** pointing upward.
4. **Pull the handle out from the Crank Wheel (17) and fold it away.**

You can now store the table underneath a high bed or propped in a closet

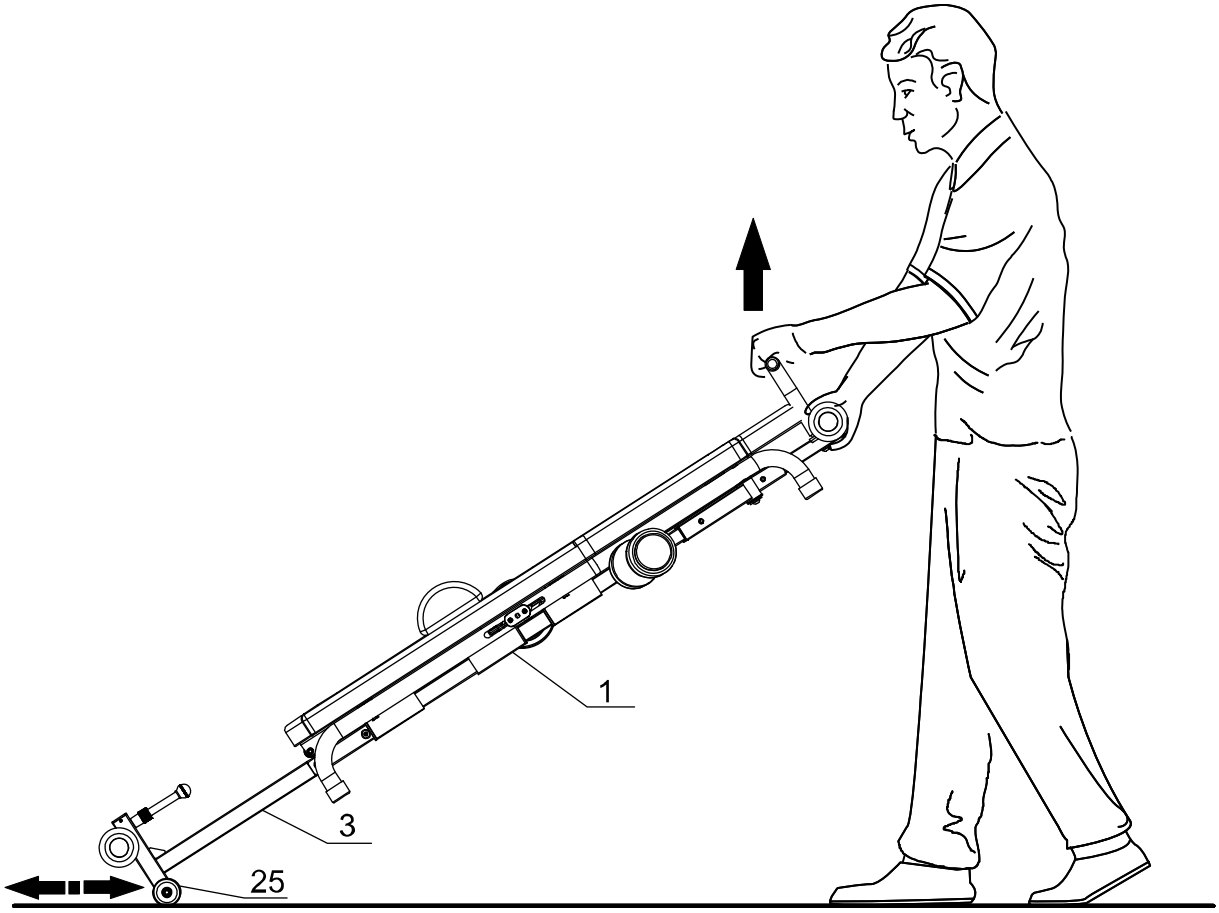

Lift up the **Main Frame (1)** until the **Wheels (25)** on the **Heel Holder Boom (3)** make contact with the ground, then move the bench to your desired location.

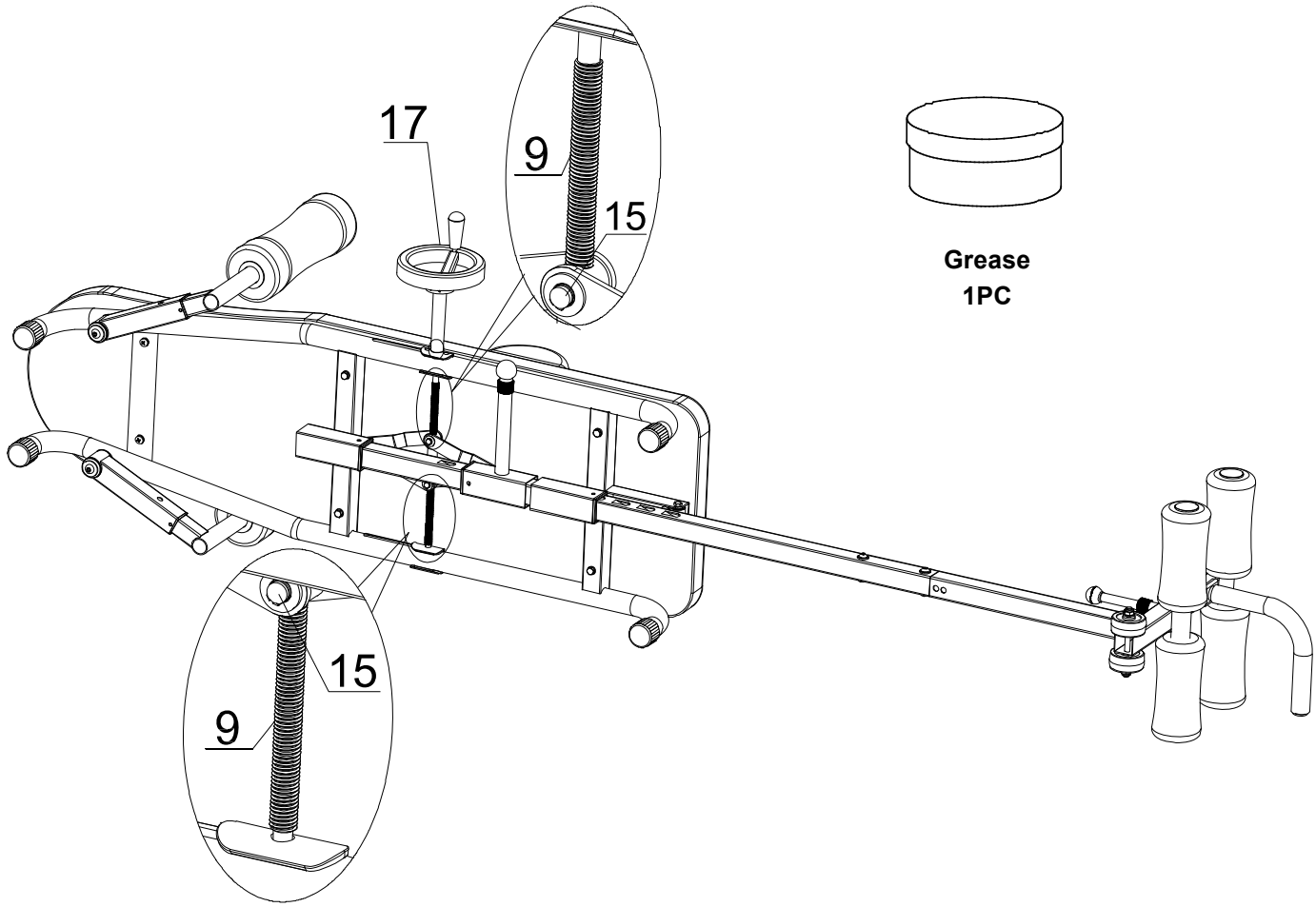

Applying Grease to the Drive Screw

1. Rotate the **Crank Wheel (17) counterclockwise** until it stops. Using your finger, take a small amount of grease from the container and work the grease onto the threads of the **Drive Screw (9).**

2. Repeat this process for the left and right **Threaded Pin Joints (15)**.

3. Rotate the **Crank Wheel (17) clockwise** until it stops.

4. Repeat the same process of applying grease to the **Drive Screw (9)** threads and left and right **Threaded Pin Joints (15)**.

This will ensure proper lubrication of the entire **Drive Screw (9)**. You can now proceed with normal operation of the table.

MANUFACTURER'S LIMITED WARRANTY

Paradigm Health & Wellness warrants to the original purchaser that this product is free from defects in material and workmanship when used for the purpose intended, under the conditions that it has been installed and operated in accordance with Paradigm's Owner's Manual. Paradigm's obligation under this warranty applies to the following:

COMPONENT	LENGTH OF WARRANTY
Structural Frame	1 year For Home Use Only
All Other Components	90 days For Home Use Only

Exclusions from Warranty Coverage:

Paradigm does not warrant against and is not responsible for, and no implied warranty shall be deemed to cover, any product failure, product malfunction, or damages attributable to:

1. Improper installation and/or failure to abide by Paradigm's installation guidelines;
2. Use of this product beyond normal home use, or in an application for which it was not designed;
3. Cosmetic items such as scratches, dents or discolorations;
4. Damage caused by normal wear and tear, vandalism, accidental or by animals;
5. Any act of Nature (such as fire, flooding, snow, ice, hurricane, earthquake, lightning or other natural disaster), environmental condition (such as air pollution, mold, mildew, etc.), or staining from foreign substances (such as dirt, grease, oil, etc.);
6. Normal weathering due to exposure to sunlight, weather, and atmosphere which can cause colored surfaces to, among other things, flake, chalk, accumulate dirt or stains.
7. Improper operation, alteration, handling, storage, abuse or neglect of the products.

Paradigm, using its sole discretion, will either repair or replace free of charge any part(s) proven to be defective under normal home use. Any repair or replacement shall provide no new warranty coverage, but shall retain only the remaining portion of the original product's warranty. This warranty is offered only to the original purchaser and is not transferable. Proof of original purchase is required.

Ordering Replacement Parts

Replacement parts can be ordered by calling or emailing our customer service department:
Monday thru Friday, 8:00 AM - 5:00 PM (PST).

service@paradigmhw.com

When ordering replacement parts have the following information ready:

1. Owner's Manual
2. Model Number
3. Description of Parts
4. Part Number
5. Date of Purchase

Paradigm Health & Wellness, Inc.

EMAIL THIS FORM WITH YOUR RECEIPT OF PURCHASE TO

Service@paradigmhw.com *

NAME:_____

YOUR EMAIL ADDRESS: _____

ADDRESS:_____

CITY:_____ **STATE:**_____ **ZIP:**_____

TELEPHONE: **(Day)**_____

(Night)_____

SERIAL#:_____

MODEL#:_____

PURCHASE DATE:_____

PLACE OF PURCHASE:_____

PART #	DESCRIPTION	QTY

"YOUR ORDER WILL BE PROCESSED WITHIN 3 BUSINESS DAYS"

This form can also be faxed to #: 626-810-2166