NordicTrack®

nordictrack.com

X24 TREADMILL

Model No. NTL39225.0
Serial No. _____

Write the serial number in the space above for reference.

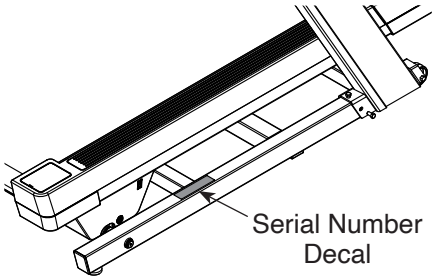

MEMBER CARE

For service at any time, go to my.iFIT.com or scan the QR code below. PLEASE DO NOT CONTACT THE STORE.

⚠CAUTION

Read all precautions and instructions in this manual before using this equipment. Keep this manual for future reference.

USER'S MANUAL

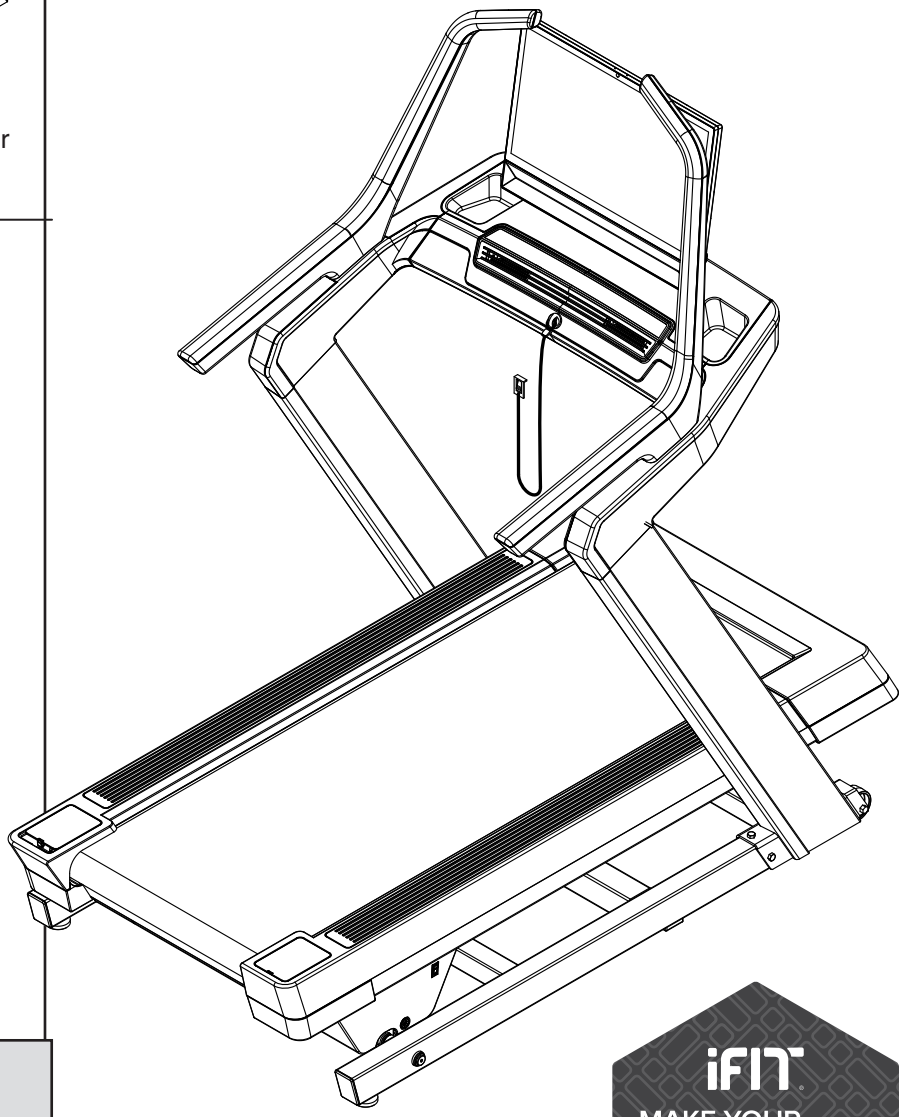

iFIT
MAKE YOUR FITNESS GOALS A REALITY
IFIT.COM

TABLE OF CONTENTS

WARNING DECAL PLACEMENT 2
IMPORTANT PRECAUTIONS 3
BEFORE YOU BEGIN 5
PART IDENTIFICATION CHART 6
ASSEMBLY 7
HOW TO PLUG IN THE POWER CORD 13
HOW TO USE THE TREADMILL 14
FCC INFORMATION 23
HOW TO MOVE THE TREADMILL 24
MAINTENANCE AND TROUBLESHOOTING 25
EXERCISE GUIDELINES 28
PART LIST 29
EXPLODED DRAWING 31
ORDERING REPLACEMENT PARTS . . . . . Back Cover
LIMITED WARRANTY . . . . . Back Cover

WARNING DECAL PLACEMENT

This drawing shows the locations of the warning decals. **If a decal is missing or illegible, see the front cover of this manual and request a free replacement decal. Apply the decal in the location shown.** Note: The decals may not be shown at actual size.

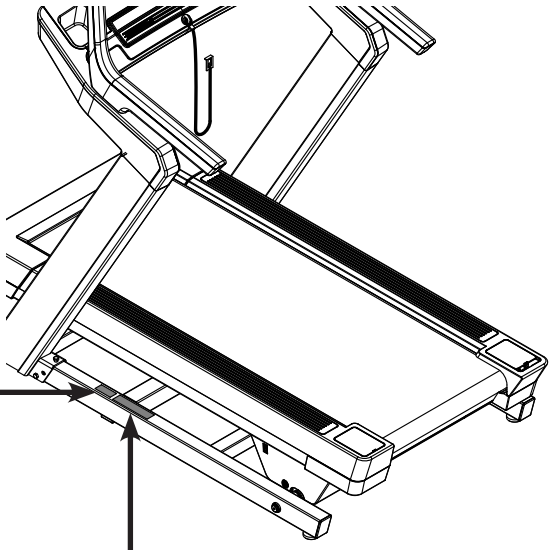

This decal is on both sides





NORDICTRACK and IFIT are registered trademarks of iFIT Inc. The Bluetooth® word mark and logos are registered trademarks of Bluetooth SIG, Inc. and are used under license. Google Maps is a trademark of Google LLC. Wi-Fi is a registered trademark of Wi-Fi Alliance. WPA and WPA2 are trademarks of Wi-Fi Alliance.

IMPORTANT PRECAUTIONS

⚠WARNING: To reduce the risk of burns, fire, electric shock, or injury to persons, read all important precautions and instructions in this manual and all warnings on your treadmill before using your treadmill. iFIT assumes no responsibility for personal injury or property damage sustained by or through the use of this product.

1. **It is the responsibility of the owner to ensure that all users of the treadmill are adequately informed of all warnings and precautions.**

2. **Keep children under age 16 and pets away from the treadmill at all times.**

3. **Consult your health care provider before beginning any exercise program. This is especially important for persons over age 35 or persons with pre-existing health problems.**

4. **Consult your health care provider before beginning or continuing any exercise program during pregnancy. Use the treadmill only as authorized by your health care provider.**

5. **The treadmill is not intended for use by persons with reduced physical, sensory, or mental capabilities or lack of experience and knowledge, unless they have been given supervision or instruction concerning the use of the treadmill by someone responsible for their safety.**

6. **Use the treadmill only as described in this manual.**

7. **The treadmill is intended for home use only. Do not use the treadmill in any commercial, rental, or institutional setting.**

8. **Keep the treadmill indoors, away from moisture and dust. Do not put the treadmill in a garage or covered patio, or near water.**

9. **Place the treadmill on a level surface, with at least 8 ft. (2.4 m) of clearance behind it and 2 ft. (0.6 m) on each side. Do not place the treadmill on any surface that blocks air openings. To protect the floor or carpet from damage, place a mat under the treadmill.**

10. **Do not operate the treadmill where aerosol products are used or where oxygen is being administered.**

11. **The treadmill should be used only by persons weighing 400 lbs. (182 kg) or less.**

12. **Never allow more than one person on the treadmill at a time.**

13. **Wear appropriate exercise clothes while using the treadmill. Do not wear loose clothes that could become caught in the treadmill. Athletic support clothes are recommended for both men and women. *Always wear athletic shoes. Never use the treadmill with bare feet, wearing only stockings, or in sandals.***

14. **Plug the power cord into a surge suppressor (not included), and plug the surge suppressor into an appropriate outlet (see page 13). To avoid overloading the circuit, do not plug other electrical devices, except for low-power devices such as cell phone chargers, into the surge suppressor or into an outlet on the same circuit.**

15. **Use only a surge suppressor that meets all of the specifications described on page 13. To purchase a surge suppressor, see your local NORDICTRACK dealer, see the front cover of this manual, or see your local electronics store.**

16. **Failure to use a properly functioning surge suppressor could result in damage to the control system of the treadmill. If the control system is damaged, the walking belt may slow, accelerate, or stop unexpectedly, which may result in a fall and serious injury.**

17. **Keep the power cord and the surge suppressor away from heated surfaces.**

18. **Do not operate the treadmill if the power cord or plug is damaged, or if the treadmill is not working properly. (See MAINTENANCE AND TROUBLESHOOTING on page 25 if the treadmill is not working properly.)**

19. Read, understand, and test the emergency stop procedure before using the treadmill. (See HOW TO TURN ON THE CONSOLE on page 15.) Always wear the clip while using the treadmill.

20. Be careful when mounting and dismounting the treadmill. Always stand on the foot rails when starting or stopping the walking belt. Always hold the handrails while using the treadmill.

21. When a person is walking on the treadmill, the noise level of the treadmill will increase.

22. Keep fingers, hair, and clothing away from the moving walking belt.

23. The treadmill is capable of high speeds. Adjust the speed in small increments to avoid sudden jumps in speed.

24. Never leave the treadmill unattended while it is running. Always remove the key, press the power switch into the off position (see the drawing on page 5 for the location of the power switch), and unplug the power cord when the treadmill is not in use.

25. Do not attempt to move the treadmill until it is properly assembled. (See ASSEMBLY on page 7, and HOW TO MOVE THE TREADMILL on page 24.) You must be able to safely lift 45 lbs. (20 kg) to raise, lower, or move the treadmill.

26. Never insert any object into any opening on the treadmill.

27. Inspect and properly tighten all parts each time the treadmill is used. Replace any worn parts immediately. Use only manufacturer-supplied parts.

28. **DANGER:** Always unplug the power cord immediately after use, before cleaning the treadmill, and before performing the maintenance and adjustment procedures described in this manual. Never remove the motor hood unless instructed to do so by an authorized service representative. Servicing other than the procedures in this manual should be performed by an authorized service representative only.

29. Over exercising may result in serious injury or death. If you feel faint, if you become short of breath, or if you experience pain while exercising, stop immediately and cool down.

SAVE THESE INSTRUCTIONS

BEFORE YOU BEGIN

Thank you for selecting the revolutionary NORDICTRACK® X24 treadmill. The X24 treadmill offers a selection of features designed to make your workouts at home more effective and enjoyable.

For your benefit, read this manual carefully before using the treadmill. If you have questions after reading this manual, please see the front cover of this manual. To help us assist you, note the product model number and serial number before contacting us (see the front cover of this manual).

Before reading further, please familiarize yourself with the parts that are labeled in the drawing below.

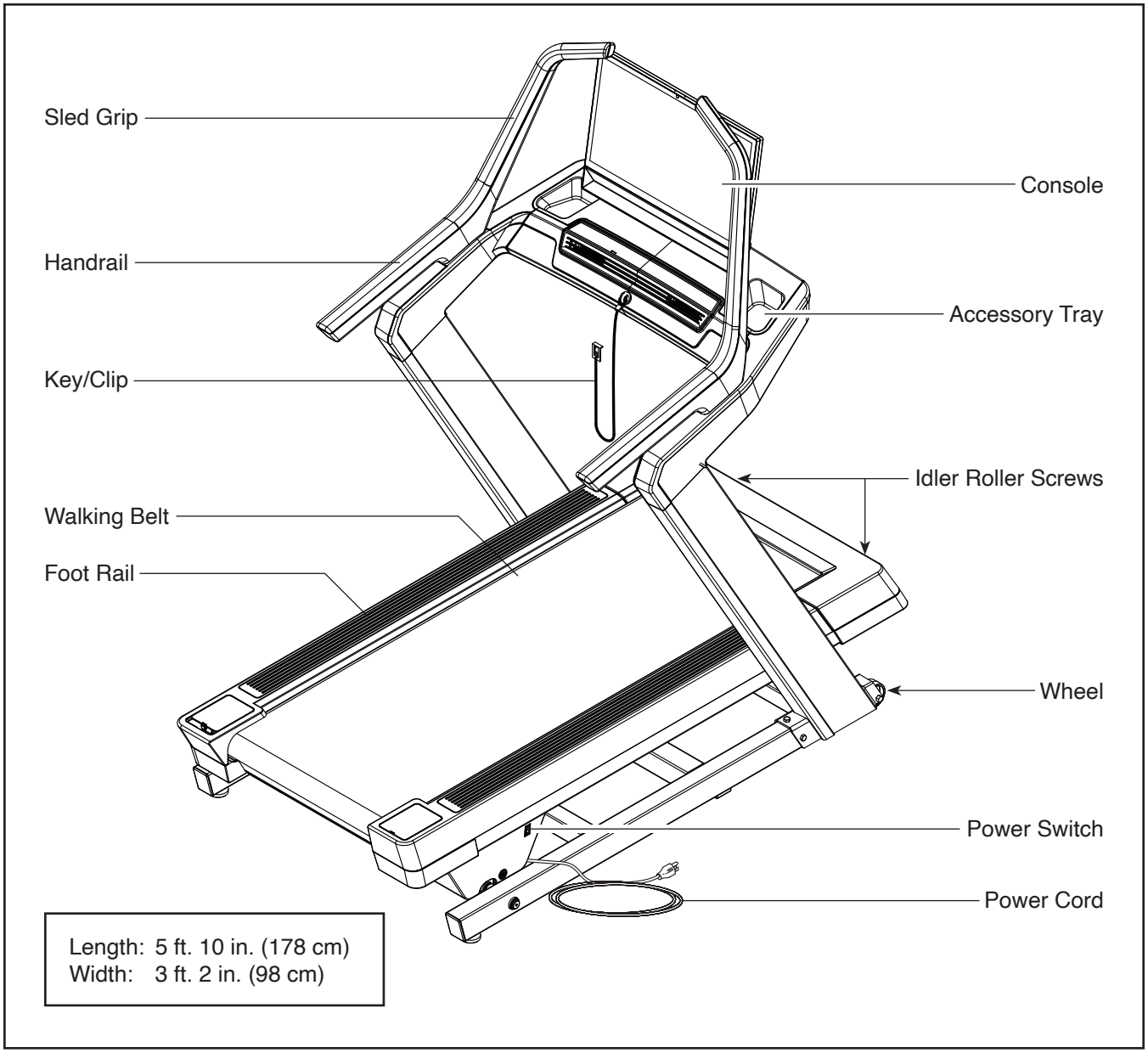

PART IDENTIFICATION CHART

Use the drawings below to identify small parts used for assembly. The number in parentheses below each drawing is the key number of the part, from the PART LIST near the end of this manual. The number after the key number is the quantity used for assembly. **Note: If a part is not in the hardware kit, check to see whether it is preattached. Extra parts may be included.**

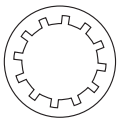

3/8" Star
Washer (3)–10

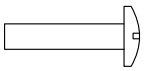

#8 x 5/8"
Machine Screw
(65)–2

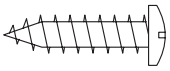

#8 x 3/4"
Screw
(5)–2

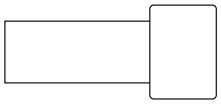

5/16" x 3/4"
Screw (84)–4

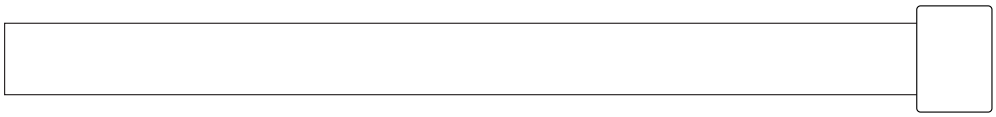

3/8" x 4 3/4" Screw (1)–4

ASSEMBLY

- Assembly requires two persons.
- Place all parts in a cleared area and remove the packing materials. Do not dispose of the packing materials until you finish all assembly steps.
- After shipping, there may be an oily substance on the exterior of the treadmill. This is normal. If there is an oily substance on the treadmill, wipe it off with a soft cloth and a mild, non-abrasive cleaner.
- To identify small parts, see page 6.
- Assembly can be completed using the included tools. Note: Keep the included tools. One or more of the tools may be needed to make adjustments in the future. To avoid damaging parts, do not use power tools for assembly or adjustment.

1. **Go to my.nordictrack.com and register your product.**
   - documents your ownership
   - activates your warranty
   - ensures priority customer support if assistance is ever needed

1

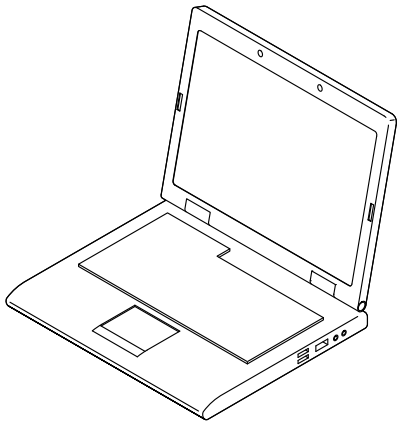

2. **Make sure that the power cord is unplugged.**

   Remove the six 3/8" x 3/4" Screws (18) from the Base (74) (only one side is shown). **Keep the Screws.**

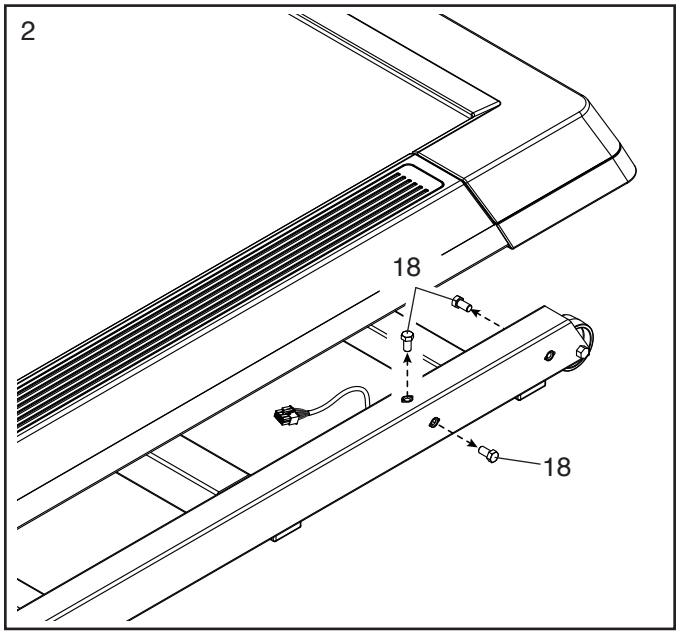

3. **Do not pinch any wires during this step.** With the help of a second person, set the upright assembly (A) on the Base (74) as shown. **Have the second person hold the upright assembly until this step is completed.**

   Next, attach the upright assembly (A) with the six 3/8" x 3/4" Screws (18) that you removed in step 2 and six 3/8" Star Washers (3); **do not tighten the Screws yet.**

   Note: You may need to nudge the upright assembly (A) forward or backward slightly to align the screw holes.

   Next, **firmly tighten the 3/8" x 3/4" Screw (18) indicated by the arrow** on each side of the upright assembly (A) (only one side is shown).

   Then, **firmly tighte**n the other four 3/8" x 3/4" Screws (18).

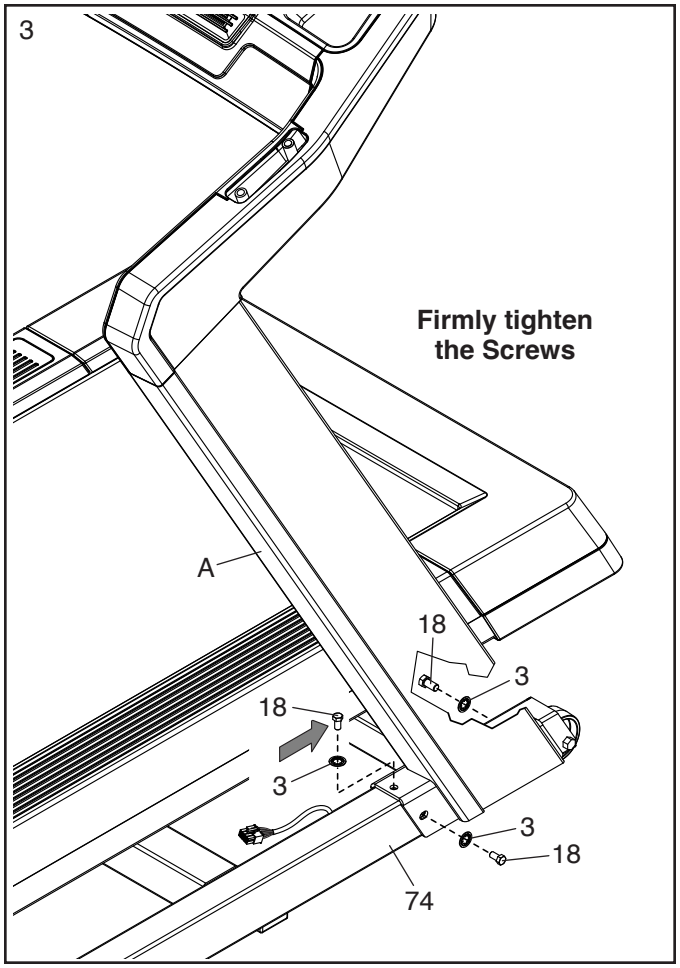

4. Connect the Base Wire (52) to the Upright Wire (75) in the Right Upright (83).

   IMPORTANT: The wire connectors should slide together easily and snap into place with an audible click. You must connect the wires properly for your treadmill to function properly.

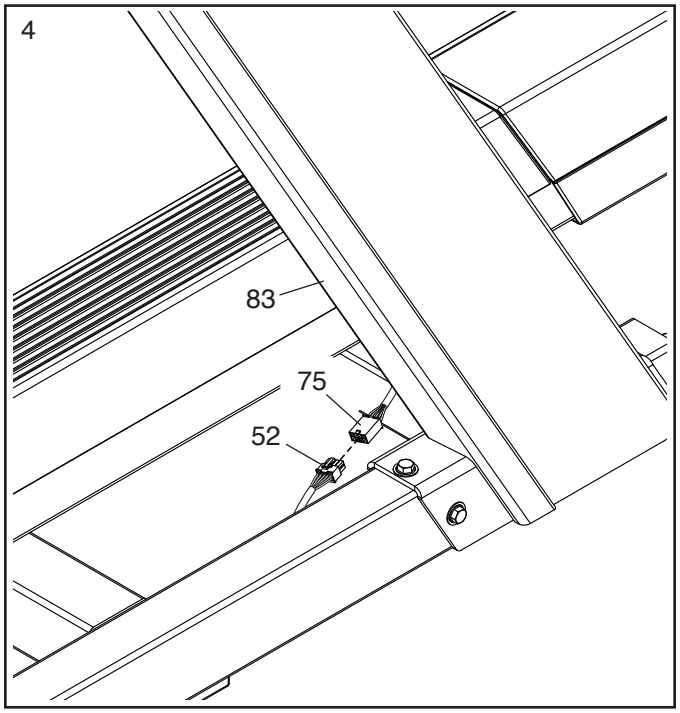

5. **Remove the tag (not shown) from the Pivot Plate (111) on the console assembly (B).**

   Next, have a second person hold the console assembly (B) near the handrail assembly (C). **See the inset drawing.** Make sure that the console assembly is oriented so that the indicated hole (D) is aligned with the locator pin (E).

   Next, insert the console wires (F) downward through the round opening in the handrail assembly (C) and set the console assembly (B) on the handrail assembly. **Do not pinch the wires.**

   Attach the console assembly (B) with two 5/16" x 3/4" Screws (84); **do not fully tighten the Screws yet.**

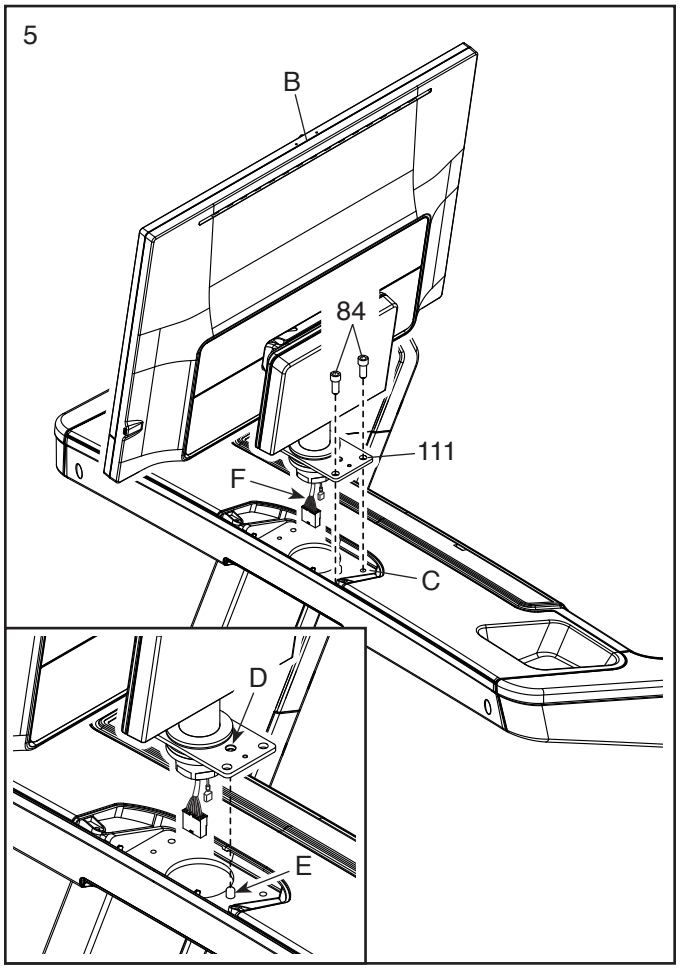

6. **Rotate the console assembly (B) so that it faces the opposite direction.** Tighten two 5/16" x 3/4" Screws (84) into the Pivot Plate (111); **start both Screws, and then firmly tighten them.**

   See the inset drawing. Identify the Left Pivot Cover (96). Attach the Left Pivot Cover to the Pivot Plate (111) with a #8 x 5/8" Machine Screw (65); **do not overtighten the Machine Screw.**

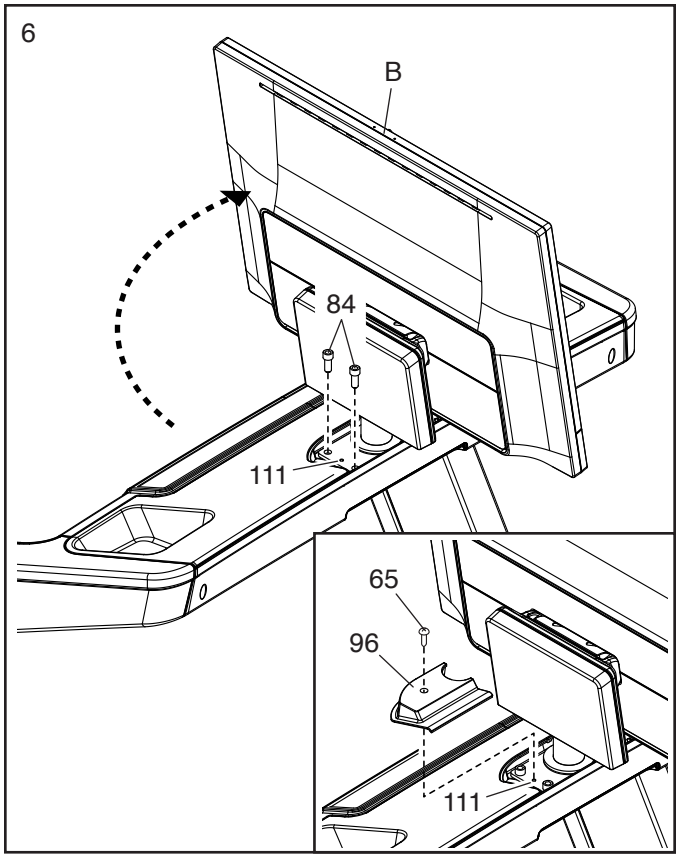

7. **Rotate the console assembly (B) back to its original position.** Firmly tighten the two 5/16" x 3/4" Screws (84) that you attached in step 5.

   Then, attach the Right Pivot Cover (100) to the Pivot Plate (111) with a #8 x 5/8" Machine Screw (65); **do not overtighten the Machine Screw.**

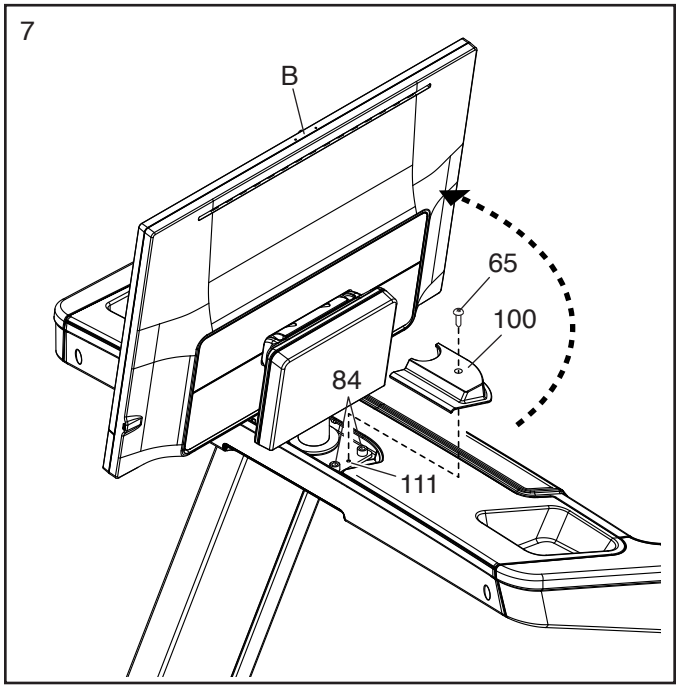

8. **Rotate the console assembly (B) to the position shown.**

   See the inset drawing. Connect the console ground wire (G) to the ground wire (H) in the handrail assembly (C).

   See the inset drawing. Next, connect the console wire (I) to the wire (J) in the handrail assembly (C). **IMPORTANT: The wire connectors should slide together easily and snap into place with an audible click. You must connect the wires properly for your treadmill to function properly.**

   Then, carefully push all wires into the handrail assembly (C), and attach the Access Cover (87) with two #8 x 3/4" Screws (5): **do not overtighten the Screws.**

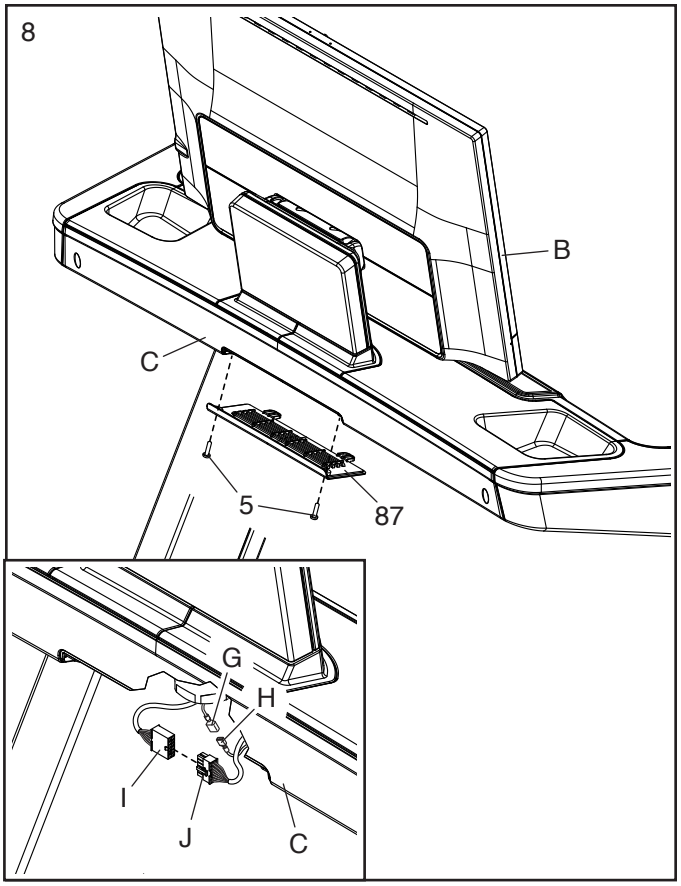

9. Attach the right handrail assembly (K) to the treadmill with two 3/8" x 4 3/4" Screws (1) and two 3/8" Star Washers (3); **firmly tighten the Screws.**

   Attach the left handrail assembly (L) in the same way.

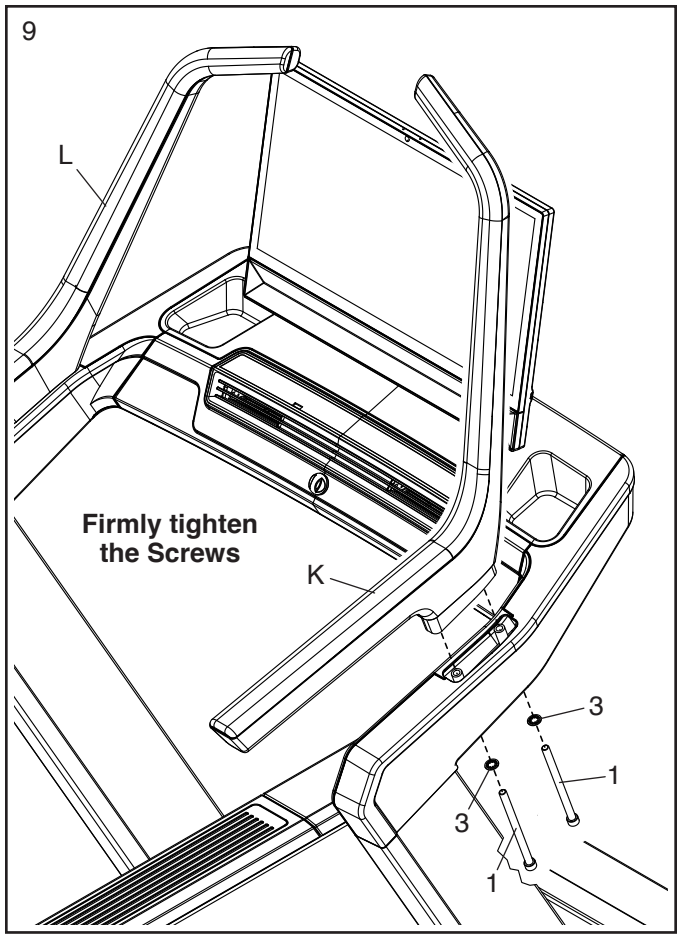

10. If necessary, move the treadmill to the desired location (see page 27).

    After the treadmill is placed in the location where it will be used, make sure that the treadmill rests firmly on the floor. If the treadmill rocks even slightly, turn a Leveling Foot (77) as needed until the rocking motion is eliminated.

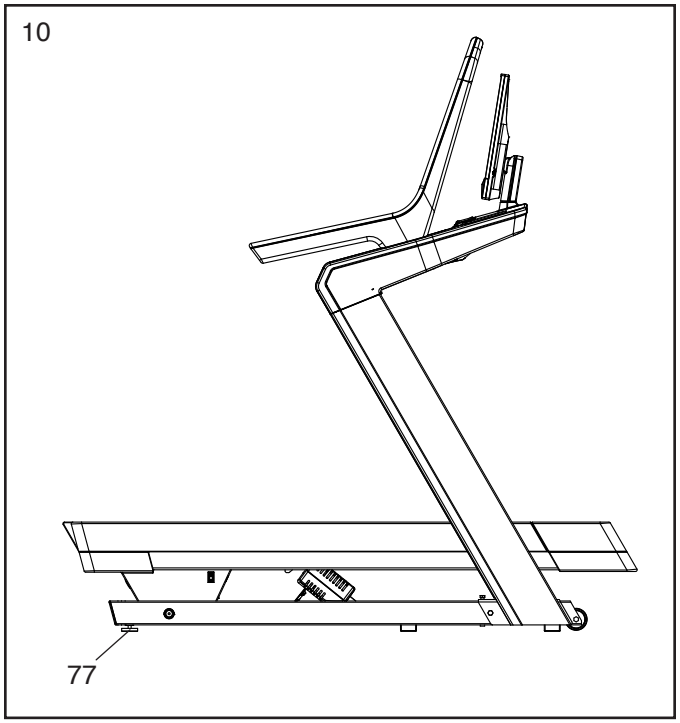

11. **Make sure that all parts are properly tightened before you use the treadmill.** Keep the included hex keys in a secure place. One of the hex keys is used to adjust the walking belt (see page 27). To protect the floor or carpet from damage, place a mat under the treadmill. To avoid damage to the console, keep the treadmill out of direct sunlight.

HOW TO PLUG IN THE POWER CORD

USE A SURGE SUPPRESSOR

Your treadmill, like other electronic equipment, can be damaged by sudden voltage changes in your home's power. Voltage surges, spikes, and noise interference can result from weather conditions or from other appliances being turned on or off. **To decrease the risk of damaging the treadmill, always use a surge suppressor (A) with the treadmill. To purchase a surge suppressor, see precaution 15 on page 3.**

Use only a surge suppressor (A) that is UL 1449 listed as a transient voltage surge suppressor (TVSS). The surge suppressor must have a UL suppressed voltage rating of 400 volts or less and a minimum surge dissipation of 450 joules. The surge suppressor must also be electrically rated for 120 volts AC and 15 amps. There must be a monitoring light on the surge suppressor to indicate whether it is functioning properly. **Failure to use a properly functioning surge suppressor could result in damage to the control system of the treadmill and serious injury to users.**

PLUG IN THE POWER CORD

The treadmill must be grounded. If it should malfunction or break down, grounding provides a path of least resistance for electric current to reduce the risk of electric shock. The treadmill power cord (B) has a plug with a grounding pin (C) (see drawing 1 on this page).

⚠ DANGER: Improper connection of the power cord increases the risk of electric shock. Do not modify the plug—if it will not fit an outlet, have a proper outlet installed by a qualified electrician. If you are unsure whether the treadmill is properly grounded, contact a qualified electrician.

Plug the power cord (B) into a surge suppressor (A), and plug the surge suppressor into an appropriate outlet (D) that is properly installed and grounded in accordance with all local codes and ordinances. **The outlet must be on a nominal 120-volt circuit capable of carrying 15 or more amps. To avoid overloading the circuit, do not plug other electrical devices, except for low-power devices such as cell phone chargers, into the surge suppressor or into an outlet on the same circuit. IMPORTANT: If the treadmill is connected to an AFCI-equipped outlet and your circuit breaker trips repeatedly when the treadmill is used, see the front cover of this manual to purchase an arc filter.**

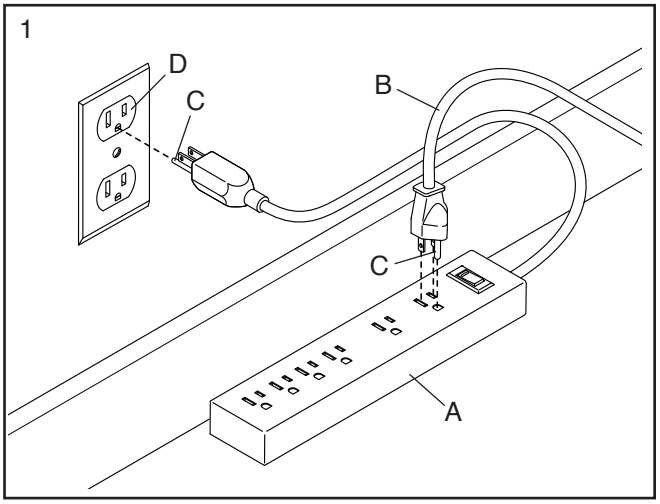

A temporary adapter (E) may be used to connect the surge suppressor (A) to a 2-pole receptacle (F) if a properly grounded outlet is not available.

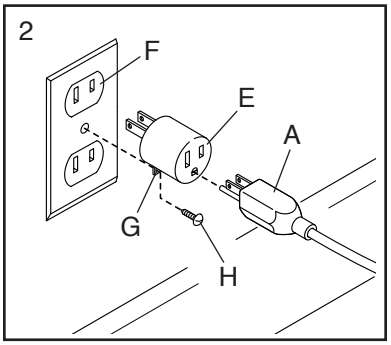

The lug (G) or wire extending from the adapter must be connected with a metal screw (H) to a permanent ground such as a properly grounded outlet box cover. **Some 2-pole receptacle outlet box covers are not grounded. Before using an adapter, contact a qualified electrician to determine whether the outlet box cover is grounded. The temporary adapter should be used only until a properly grounded outlet can be installed by a qualified electrician.**

HOW TO USE THE TREADMILL

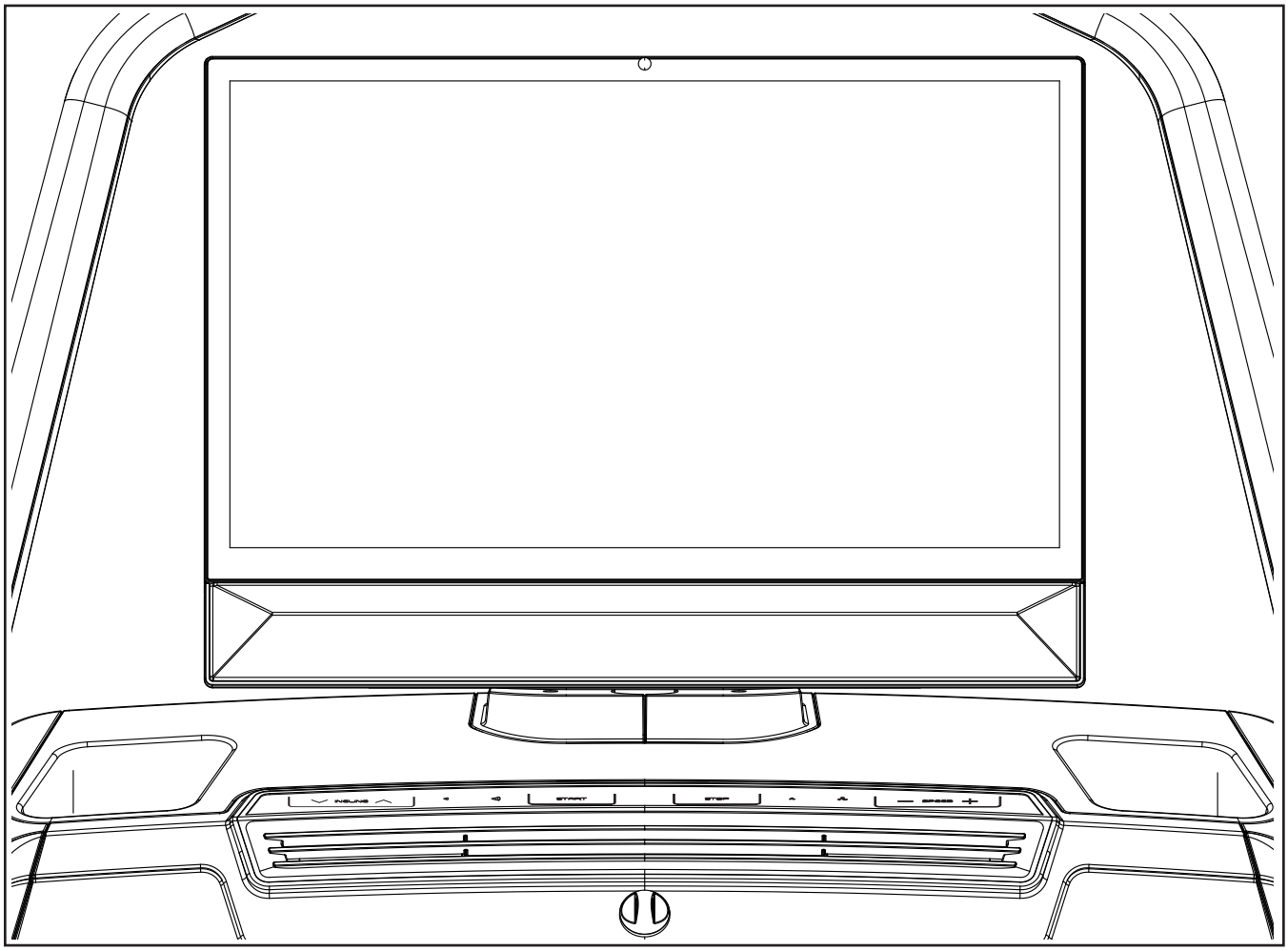

FEATURES OF THE CONSOLE

The advanced console offers a selection of features designed to make your workouts more effective and exciting.

When you use the manual mode of the console, you can change the speed and incline of the treadmill with a touch of a button. As you exercise, the console will display instant exercise feedback.

The console also features wireless technology that enables the console to connect to iFIT®. With iFIT, you can choose from a changing selection of featured workouts that automatically control the speed and incline of the treadmill as iFIT trainers guide you through immersive exercise sessions.

With an iFIT subscription, you can access a library of thousands of on-demand destination and studio workouts, create your own workouts, track your workout results, and access many other features. Go to iFIT.com to learn more.

IMPORTANT: To prevent damage to the treadmill, wear clean athletic shoes while using the treadmill. The first time you use the treadmill, observe the alignment of the walking belt, and center it if necessary (see page 27).

HOW TO TURN ON THE CONSOLE

IMPORTANT: If the treadmill has been exposed to cold temperatures, allow it to warm to room temperature before you turn on the console. If you do not do this, you may damage electrical components.

Plug in the power cord. Next, locate the power switch on the treadmill frame near the power cord. Press the power switch into the reset position (A).

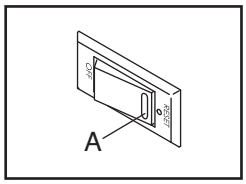

Next, **stand on the foot rails of the treadmill.** Locate the clip (B) attached to the key (C), and slide the clip securely onto the waistband of your clothes. Then, insert the key into the console. **IMPORTANT: In an emergency, the key can be pulled from the console, causing the walking belt to slow to a stop. Test the clip by taking a few steps backward; if the key is not pulled from the console, adjust the position of the clip.**

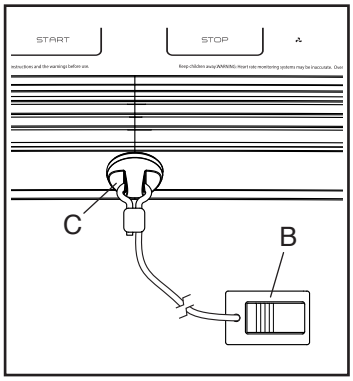

HOW TO TURN OFF THE CONSOLE

When you finish using the treadmill, remove the key from the console and put it in a secure place. Then, press the power switch into the off position and unplug the power cord. **IMPORTANT: If you do not do this, the electrical components of the treadmill may wear prematurely.**

IMPORTANT: To avoid damaging the treadmill, adjust the incline to 0% before you fold the treadmill.

HOW TO USE THE TOUCH SCREEN

The console features an advanced tablet with a full-color touch screen. You can slide or flick your finger against the screen to move images on the screen, such as the displays in a workout. Note: The screen is not pressure sensitive; you do not need to press hard.

To type information into a text box, touch the text box to view the keyboard. To use numbers or other characters, touch *?123*. To view more characters, touch *~[<*. To return to the letter keyboard, touch ABC. To use a capital character, touch the shift button (upward-facing arrow symbol). To clear text, touch the clear button (backward-facing arrow with an X).

HOW TO SET UP THE CONSOLE

Before you use the treadmill for the first time, set up the console.

1. **Follow the prompts on the screen to connect to your wireless network.**

   To use iFIT workouts and several other features of the console, the console must be connected to a wireless network (see page 21 for more information).

2. **Follow the prompts on the screen to choose your preferred language.**

   Note: To change this setting or other settings later, see page 20.

3. **Check for firmware updates.**

   The console will automatically check for firmware updates and install them if they are found. As a result, some new settings or features may not be described in this manual. Note: Firmware updates are always designed to improve your exercise experience.

4. **Create or sign in to your iFIT account.**

   Follow the prompts on the screen to create an iFIT account or to log in to your iFIT account. Available subscription options will be shown.

5. **Calibrate the incline system.**

   Touch the menu button (three horizontal lines symbol), touch *Settings,* touch *Maintenance,* and then touch *Calibrate Incline* and follow the prompts on the screen.

The console is now ready for you to begin working out. Start by exploring the home screen to see featured workouts, view awards and achievements, or select a manual workout. **See the following pages to learn how to use the manual mode, the sled push feature, a featured workout, a draw-your-own-map workout, or an iFIT workout.**

HOW TO USE THE MANUAL MODE

1. **Select the home screen.**

   When you turn on the console, the home screen will appear after the console boots up. If you have already selected a workout, touch the screen and follow the prompts to end the workout and return to the home screen.

2. **Get ready for the workout.**

   Touch *Manual Start* on the screen or press the Start button on the console to start the walking belt. The walking belt will start to move at a low speed and a warm-up period will begin.

   To use the fan, your Bluetooth headphones, or an optional heart rate monitor, see page 22.

3. **Change the speed of the treadmill as desired.**

   You can change the speed of the walking belt in the following ways:

   Speed buttons on the console—Each time you press a button, the speed setting will change in small increments; if you hold down the button, the speed setting will change more quickly.

   Numbered speed buttons on the screen—Each time you touch a button, the walking belt will gradually change speed until it reaches the selected speed setting. You can also drag a button vertically to change the speed setting in smaller increments.

   Note: If you do not see the speed buttons on the screen, touch the screen in any open space and then touch *Controls.*

4. **Change the incline of the treadmill as desired.**

   You can change the incline of the treadmill in the same way as the speed, using the Incline buttons on the console or the numbered Incline buttons on the screen.

5. **Follow your progress.**

   The console offers several display modes. The display mode that you select will determine which workout information is shown.

   Drag upward on the screen to enter the fullscreen display mode. Drag downward to view the workout information displays.

   Touch the various workout information displays to view more options. Touch the more button (+ symbol) to view statistics or charts. Touch the screen in any open space to view even more display mode options.

   If desired, adjust the volume level by pressing the volume increase and decrease buttons on the console.

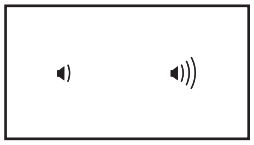

6. **Pause or end the workout.**

   To pause the workout, first **step onto the foot rails.** Next, touch the screen and then touch the pause icon or press the Stop button on the console. To continue the workout, touch the start icon on the screen or press the Start button on the console.

   To end the workout, first **step onto the foot rails.** Next, press the Stop button on the console or touch the screen, touch the pause icon, and then touch the stop icon. Then, follow the prompts on the screen to end the workout and return to the home screen.

7. **When you are finished using the treadmill, turn off the console (see page 15).**

HOW TO USE THE SLED PUSH FEATURE

1. **Select the home screen.**

   When you turn on the console, the home screen will appear after the console boots up. If you have already selected a workout, touch the screen and follow the prompts to end the workout and return to the home screen.

2. **Start the walking belt and adjust the speed to 1 mph (1.6 kph). Then, adjust the incline to 0%.**

   See steps 3 and 4 on page 16 to adjust the speed and incline settings. **IMPORTANT: Do not use the sled push feature when the treadmill is off, when the speed setting is higher than 1 mph, or when the incline setting is higher or lower than 0%.**

3. Grip the sled grips (see page 5) with both hands, and use your body to manually move the walking belt at the desired speed.

4. **When you are finished using the treadmill, turn off the console (see page 15).**

HOW TO USE A FEATURED WORKOUT

To use a featured workout, the console must be connected to a wireless network.

1. **Select the home screen or the workout library.**

   When you turn on the console, the home screen will appear after the console boots up. If you have already selected a workout, touch the screen and follow the prompts to end the workout and return to the home screen.

   To select the workout library, touch *Browse.*

2. **Select a workout.**

   To select a workout from the home screen or the workout library, simply touch the desired workout image on the screen. Slide or flick the screen to scroll as necessary.

   The featured workouts on your console will change periodically. To save one of the featured workouts for future use, you can add it as a favorite by touching the favorites button (heart symbol). You must be logged in to your iFIT account to save a featured workout (see step 5 on page 20).

   When you select a workout, the screen will show an overview of the workout that includes details such as the duration and distance of the workout and the approximate number of calories that you will burn during the workout.

3. **Get ready for the workout.**

   Touch *Start Workout.* The walking belt will start to move at a low speed and a warm-up period will begin.

   To use the fan, your Bluetooth headphones, or an optional heart rate monitor, see page 22.

4. **Start the workout.**

   Touch *End Warmup* or walk until the warm-up period ends to start the workout.

   During some workouts, an iFIT trainer will guide you through an immersive video workout. Touch the screen in any open space to view and select music, trainer voice, and volume options for the workout.

   During some workouts, the screen will show a map of the route and a marker indicating your progress. Touch the buttons on the screen to select the desired map options.

   During the workout, the speed and incline of the treadmill will change automatically according to the settings of the workout. **If the speed and/or incline level is too high or too low,** you can manually override the setting (see steps 3 and 4 on page 16). To return to the programmed speed and/or incline settings of the workout, touch *Follow Workout*.

   If the smart adjust feature is enabled, the console will scale the intensity level of the workout automatically based on your manual overrides of the speed and incline settings. **To enable the smart adjust feature,** touch the screen in any open space and then touch the smart adjust toggle.

   IMPORTANT: The calorie goal shown in the workout description is only an estimate. The actual number of calories that you burn will depend on various factors such as your weight. In addition, if you manually change the speed or incline level during the workout, the number of calories that you burn will be affected.

   If the active pulse feature is enabled, the console will scale the intensity level of the workout automatically based on your heart rate when you use a compatible heart rate monitor. **To enable the active pulse feature,** see step 3 on page 20.

   To follow your progress, see step 5 on page 16.

   To pause or end the workout, see step 6 on page 16.

5. **When you are finished using the treadmill, turn off the console (see page 15).**

HOW TO CREATE A DRAW-YOUR-OWN-MAP WORKOUT

To use a draw-your-own-map workout, you must be logged in to your iFIT account and the console must be connected to a wireless network.

1. **Select a draw-your-own-map workout.**

   When you turn on the console, the home screen will appear after the console boots up. If you have already selected a workout, touch the screen and follow the prompts to end the workout and return to the home screen.

   To select a draw-your-own-map workout, touch *Create* at the bottom of the screen.

2. **Draw a workout on the map.**

   Navigate to the area on the map where you want to draw a workout by typing in the search box or by sliding your fingers on the screen. Touch the screen to add the starting point for the workout. Then, touch the screen to add the ending point for the workout.

   If you want to start and end the workout at the same point, touch *Close Loop* or *Out & Back* in the map options. You can also select whether you want the workout to snap to the road. If you make a mistake, touch *Undo*.

   The screen will display the elevation and distance statistics for the workout.

3. **Save the workout.**
   Touch *Save New Workout.* If desired, enter a title and description for the workout.

4. **Get ready for the workout.**

   Touch *Start Workout.* The walking belt will start to move at a low speed and a warm-up period will begin.

   To use the fan, your Bluetooth headphones, or an optional heart rate monitor, see page 25.

5. **Start the workout.**

   Touch *End Warmup* or walk until the warm-up period ends to start the workout. The workout will function in the same way as a featured workout.

6. **When you are finished using the treadmill, turn off the console (see page 15).**

HOW TO USE AN IFIT WORKOUT

To use an iFIT workout, you must be logged in to your iFIT account and the console must be connected to a wireless network. **For more information about iFIT, go to iFIT.com.**

1. **Select the home screen.**

   When you turn on the console, the home screen will appear after the console boots up. If you have already selected a workout, touch the screen and follow the prompts to end the workout and return to the home screen.

2. **Log in to your iFIT account.**

   If you have not done so, touch the menu button (three horizontal lines symbol) on the screen and then touch *Log in* to log in to your iFIT account. Follow the prompts on the screen to enter your username and password.

   To switch users within your iFIT account, touch the menu button, touch *Settings,* and then touch *Manage Accounts*. If more than one user is associated with the account, a list of users will appear. Touch the name of the desired user.

3. **Select an iFIT workout from the home screen or the workout library.**

   Touch the buttons at the bottom of the screen to select either the home screen *(Home)* or the workout library *(Browse)*.

   To select an iFIT workout from the home screen or the workout library, simply touch the desired workout image on the screen. Slide or flick the screen to scroll as necessary.

   The workout library contains all of the iFIT workouts organized into categories. To search the workout library, touch *Filters* and select the desired filtering options.

When you select an iFIT workout, the screen will show an overview of the workout that includes details such as the duration of the workout and the approximate number of calories that you will burn during the workout.

You can also select options such as adding the workout to your schedule (see step 4) or marking the workout as a favorite (see step 5).

4. **Schedule an iFIT workout on the calendar if desired.**

   To schedule an iFIT workout for a future date, simply view the overview or workout summary of the desired iFIT workout, touch *Schedule,* and then select the desired date on the calendar. When the selected date arrives, the iFIT workout that you scheduled will appear on the home screen.

5. **Create a list of favorite iFIT workouts if desired.**

   To mark an iFIT workout as a favorite, simply view the overview or workout summary of the desired iFIT workout and touch the favorites button (heart symbol).

   To view a list of iFIT workouts that you have marked as favorites, touch *Browse* and then scroll downward to *My List*.

6. **Get ready for the workout.**

   Touch *Start Workout.* The walking belt will start to move at a low speed and a warm-up period will begin.

   To use the fan, your Bluetooth headphones, or an optional heart rate monitor, see page 22.

7. **Start the workout.**

   Touch *End Warmup* or walk until the warm-up period ends to start the workout. The workout will function in the same way as a featured workout.

8. **When you are finished using the treadmill, turn off the console (see page 15).**

HOW TO CHANGE CONSOLE SETTINGS

1. **Select the settings main menu.**

   When you turn on the console, the home screen will appear after the console boots up. If you have already selected a workout, touch the screen and follow the prompts to end the workout and return to the home screen.

   Then, touch the menu button (three horizontal lines symbol) on the screen and then touch *Settings*.

2. **Navigate the settings menus and change settings as desired.**

   Slide or flick the screen to scroll upward or downward if necessary. To view a settings menu, simply touch the menu name. To exit a menu, touch the back button (arrow symbol). You may be able to view and change settings in the following settings menus:

   Account
   - Languages
   - In Workout
   - Manage Accounts

   Equipment
   - Equipment Info
   - Equipment Settings
   - Maintenance
   - Wi-Fi

   About
   - Legal

3. **Customize workout settings.**

   To customize workout settings and enable workout features, touch *In Workout* and then touch the desired settings.

   When the active pulse feature is enabled, the console will scale the intensity level of workouts based on your heart rate when you use a compatible heart rate monitor. To enable the active pulse feature, touch the active pulse toggle. Then, select your resting and maximum heart rates and adjust related settings as desired.

4. **Customize the unit of measurement and other settings.**

   The console can display speed and distance in either standard or metric units of measurement. To select the desired unit of measurement, to adjust the screen brightness, or to change other settings, touch *Equipment Info* or *Equipment Settings* and then touch the desired settings.

5. **View machine information or console app information.**

   Touch *Equipment Info* and then touch *Machine Info* or *App Info* to view information about your treadmill or about the console app.

6. **Update the console firmware.**

   For the best results, regularly check for firmware updates. Touch *Maintenance* and then touch *Update* to check for firmware updates. The update will begin automatically. **IMPORTANT: To avoid damaging the treadmill, do not press the power switch or unplug the power cord while the firmware is being updated.**

   The screen will show the progress of the update. When the update is complete, the console will turn off and then turn back on. If it does not, press the power switch into the off position, wait for several seconds, and then press the power switch into the reset position. **Note: It may take a moment for the console to be ready for use.**

   Note: Occasionally, a firmware update may cause the console to function slightly differently. These updates are always designed to improve your exercise experience.

7. **Calibrate the incline system.**

   To calibrate the incline system, touch *Maintenance,* touch *Calibrate Incline,* and then touch *Begin*. The frame will automatically rise to the maximum incline level, lower to the minimum incline level, and then return to the starting position. This will calibrate the incline system. When the incline system is calibrated, touch *Finish*.

   IMPORTANT: Keep pets, feet, and other objects away from the treadmill while the incline system is calibrating. In an emergency, remove the key from the console to stop the incline calibration.

   Note: The incline system may occasionally calibrate automatically when you turn on the treadmill. Wait for the frame to stop moving before you attempt to use the treadmill.

8. **Exit the settings main menu.**

   To exit the settings main menu, touch the back button (arrow symbol).

HOW TO CONNECT TO A WIRELESS NETWORK

1. **Select the settings main menu.**

   When you turn on the console, the home screen will appear after the console boots up. If you have already selected a workout, touch the screen and follow the prompts to end the workout and return to the home screen.

   Then, touch the menu button (three horizontal lines symbol) on the screen and then touch *Settings*. The settings menu will appear on the screen.

2. **Set up and manage a wireless network connection.**

   Touch *Wi-Fi* to select the wireless network menu. If Wi-Fi is not enabled, touch the *Wi-Fi* toggle to enable it. When Wi-Fi is enabled, the screen will show a list of available networks. Note: It may take a few moments for the list of wireless networks to appear.

   Note: You must have your own wireless network and an 802.11b/g/n router with SSID broadcast enabled (hidden networks are not supported). The console supports unsecured and secured (WEP, WPA™, and WPA2™) encryption. A broadband connection is recommended; performance depends on connection speed.

When a list of networks appears, touch the desired network. Note: You will need to know your network name (SSID). If your network has a password, you will also need to know the password. Follow the prompts on the screen to enter your password and connect to the selected wireless network. Passwords are case-sensitive.

When the console is connected to your wireless network, a confirmation message will appear on the screen.

If you are having problems connecting to an encrypted network, make sure that your password is correct. **If you have questions after following these instructions, go to my.iFIT.com for assistance.**

3. **Exit the wireless network menu.**

   To exit the wireless network menu, touch the back button (arrow symbol).

HOW TO USE THE CHARGING PORT

The console features a charging port to charge USB-C compatible devices, such as smartphones and tablets, while you exercise.

To use the charging port, plug a USB-C charging cable (not included) into the receptacle on your device and into the charging port on the right side of the console; **make sure that the USB-C charging cable is fully plugged in.** Note: The charging port cannot be used to view or transfer data or to play music through the console sound system.

HOW TO USE THE FAN

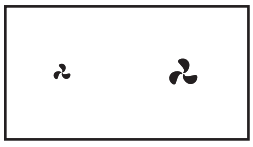

The fan has several speed settings, including an auto mode. While the auto mode is selected, the speed of the fan will automatically increase or decrease as the speed of the walking belt increases or decreases. Press the fan increase and decrease buttons on the console repeatedly to select a fan speed or to turn off the fan.

HOW TO CONNECT HEADPHONES

To connect your Bluetooth headphones to the console, first turn on your headphones, place them in pairing mode, and place them near the console. Then, start a workout. Next, touch the screen in any open space, touch the option to connect your headphones, and select your headphones from the list on the screen.

When your headphones and the console pair successfully, the audio from the console will play through your headphones.

HOW TO USE AN OPTIONAL HEART RATE MONITOR

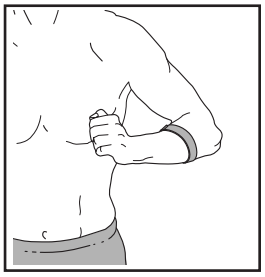

Whether your goal is to burn fat or to strengthen your cardiovascular system, the key to achieving the best results is to maintain the proper heart rate during your workouts. The optional heart rate monitor will enable you to continuously monitor your heart rate while you exercise, helping you to reach your personal fitness goals. The console is compatible with all Bluetooth® Smart heart rate monitors. **To purchase an optional heart rate monitor, please see the front cover of this manual.**

When your compatible heart rate monitor is turned on and placed in pairing mode, the console will connect to it automatically. When your heartbeat is detected, your heart rate will be shown on the screen.

FCC INFORMATION

This equipment has been tested and found to comply with the limits for a Class B digital device, pursuant to Part 15 of the FCC Rules. These limits are designed to provide reasonable protection against harmful interference in a residential installation. This equipment generates, uses, and can radiate radio frequency energy and, if not installed and used in accordance with the instructions, may cause harmful interference to radio communications. However, there is no guarantee that interference will not occur in a particular installation. If this equipment does cause harmful interference to radio or television reception, which can be determined by turning the equipment off and on, try to correct the interference by one or more of the following measures:

- Reorient or relocate the receiving antenna.
- Increase the separation between the equipment and the receiver.
- Connect the equipment into an outlet on a circuit different from that to which the receiver is connected.
- Consult the dealer or an experienced radio/TV technician for help.

FCC CAUTION: To assure continued compliance, use only shielded interface cables when connecting to computer or peripheral devices. Changes or modifications not expressly approved by the party responsible for compliance could void the user's authority to operate this equipment.

IMPORTANT: To satisfy exposure compliance requirements, the antenna and transmitter in the console must be at least 8 in. (20 cm) from all persons and must not be near or connected to any other antenna or transmitter.

Note: The console contains FCC ID: OMC453085 (Compal) or OMC453584V (CVTE).

HOW TO MOVE THE TREADMILL

IMPORTANT: Before moving the treadmill, insert the key into the console, raise the incline to the maximum incline level, remove the key, and then unplug the power cord.

CAUTION: Due to the size and weight of the treadmill, moving it requires two or three persons. To reduce the risk of injury, use extreme caution while moving the treadmill. Do not move the treadmill without lifting the back end, do not pull on the console, and do not move the treadmill over an uneven surface. Bend your legs and keep your back straight.

Take any necessary measures to avoid damaging your floor. With one person on each side of the treadmill, carefully lift the rear of the base (A) until the treadmill will roll on the wheels (B).

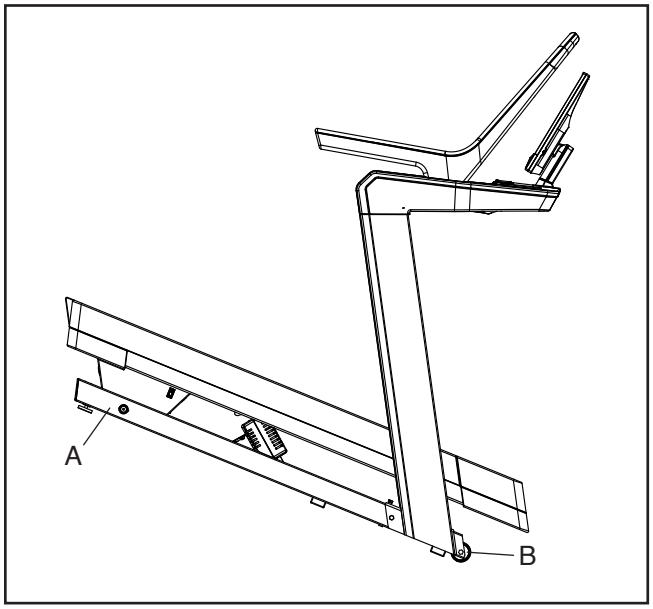

Carefully roll the treadmill to the desired location, and then lower the base to the floor.

Make sure that the treadmill rests firmly on the floor. If the treadmill rocks slightly, turn the leveling feet (C) as needed until the rocking motion is eliminated.

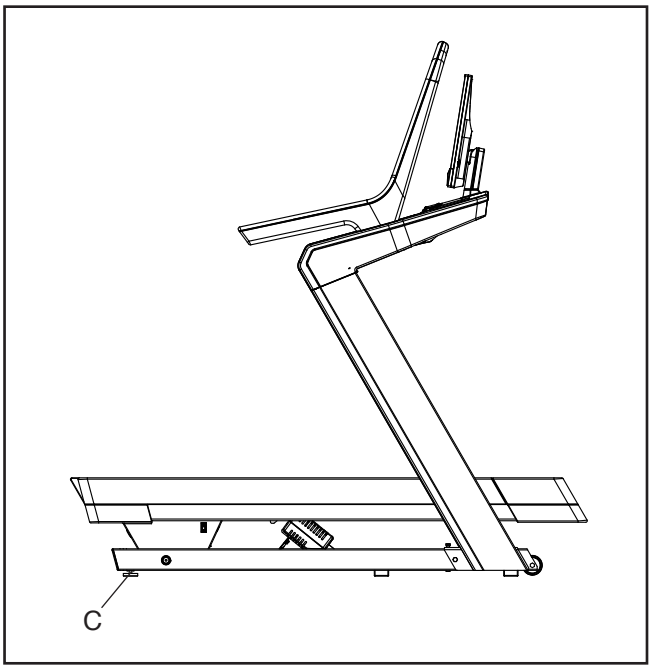

MAINTENANCE AND TROUBLESHOOTING

MAINTENANCE

Regular maintenance is important for optimal performance and to reduce wear. Inspect and properly tighten all parts each time the treadmill is used. **Replace any worn parts immediately.** Use only manufacturer-supplied parts.

Regularly clean the treadmill and keep the walking belt clean and dry. First, **press the power switch into the off position and unplug the power cord.** Wipe exterior parts of the treadmill with a damp cloth and a small amount of mild soap. **IMPORTANT: Do not spray liquids directly onto the treadmill. To avoid damage to the console, keep liquids away from the console.** Then, thoroughly dry the treadmill with a soft towel.

TROUBLESHOOTING

Many problems can be solved with the simple steps in this section. Find the symptom that applies, and follow the steps listed. If further assistance is needed, go to my.iFIT.com, scan the QR code at the right, or call 1-833-680-IFIT (1-833-680-4348).

SYMPTOM: The power does not turn on

a. Make sure that the power cord is plugged into a surge suppressor, and that the surge suppressor is plugged into a properly grounded outlet (see page 15). Use only a surge suppressor that meets all of the specifications described on page 13. **IMPORTANT: If the treadmill is connected to an AFCI-equipped outlet and your circuit breaker trips repeatedly when the treadmill is used, please see TROUBLESHOOTING above to purchase an arc filter.**

b. After the power cord has been plugged in, make sure that the key is inserted into the console.

c. Check the power switch located on the treadmill frame near the power cord. If the switch protrudes as shown (A), the switch has tripped. To reset the power switch, wait for five minutes and then press the switch back in (B).

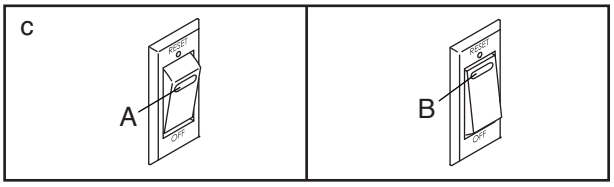

SYMPTOM: The power turns off during use

a. Check the power switch (see drawing c above). If the switch has tripped, wait for five minutes and then press the switch back in.

b. Make sure that the power cord is plugged in. If the power cord is plugged in, unplug it, wait for five minutes, and then plug it back in.

c. Remove the key from the console, and then reinsert it.

d. If the treadmill still will not run, please see TROUBLESHOOTING at the left for further assistance.

SYMPTOM: The incline of the treadmill does not change correctly

a. Calibrate the incline system (see step 7 on page 21).

SYMPTOM: The treadmill will not connect to the wireless network

a. Make sure that the wireless settings on the console are correct (see page 21).

b. Make sure that the settings for your wireless network are correct.

c. If you still have questions, go to my.iFIT.com.

SYMPTOM: The walking belt does not move

If the console displays time and distance while a workout is running, but the walking belt does not move, follow the steps below.

a. Turn off the power (see page 15) and unplug the power cord.

b. Wait for a minimum of five minutes to make sure that any residual charge has dissipated from the treadmill's electronics.

c. Plug in the power cord (see page 13), turn on the power, and start the walking belt again.

d. If the walking belt still does not run, please see TROUBLESHOOTING on page 25 for further assistance.

SYMPTOM: The console does not stay in place when it is tilted upward and downward

a. Using a standard screwdriver, carefully pry the upper console cover (F) and then the lower console cover (G) off the console (H). **Be careful to avoid damaging these parts.** Note: Your console may look slightly different from the one in the drawing.

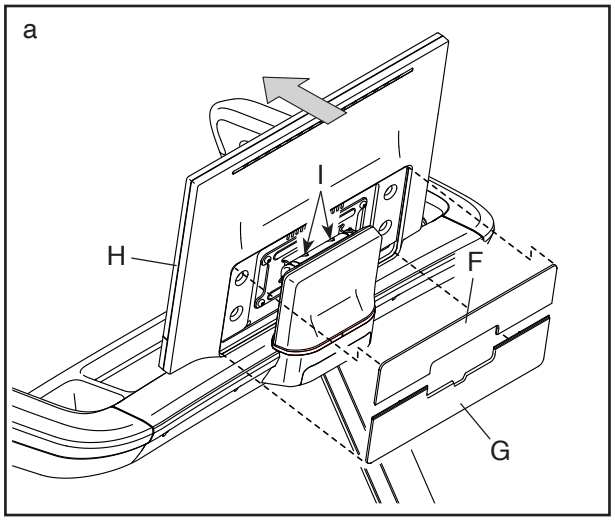

Next, tilt the top of the console (H) in the direction shown by the arrow, and use the included small hex key to tighten the two indicated M6 x 15mm screws (I) a small amount.

b. Tilt the console (H) upward as shown, and use the small hex key to tighten the two indicated M6 x 15mm screws (I) a small amount, until the console no longer feels loose. Then, see the drawing at the left and reattach the lower console cover (G) and then the upper console cover (F).

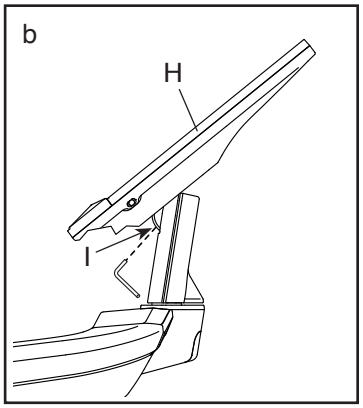

SYMPTOM: The displays of the console do not function properly

a. If the console does not boot up properly, or if the console freezes and does not respond, reset the console to the factory default settings. **IMPORTANT: Doing this will erase all of the custom settings that you have made to the console. Resetting the console requires two people.** First, press the power switch into the off position. Next, locate the indicated small opening (C) on the left side of the console. Using a bent paper clip (D), press and hold the small button inside of the opening and have a second person press the power switch into the on/reset position. **Continue to hold the button inside of the opening until the console turns on.** When the reset operation is complete, the console will turn off and then turn back on. If it does not, use the power switch to turn the treadmill off and then on again. Once the console turns on, check for firmware updates (see step 6 on page 21). **Note: It may take a few minutes for the console to be ready for use.**

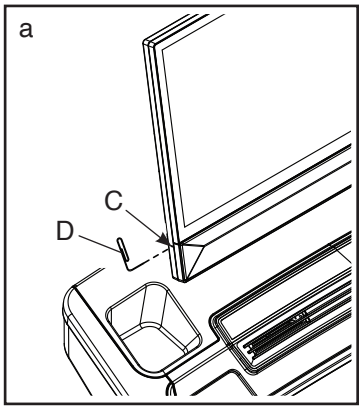

SYMPTOM: The walking belt slows when walked on

a. Use only a surge suppressor that meets all of the specifications described on page 13.

b. If the walking belt is overtightened, treadmill performance may decrease and the walking belt may become damaged. First, remove the key and **UNPLUG THE POWER CORD.** Using the hex key, turn both idler roller screws (E) counterclockwise, 1/4 of a turn. When the walking belt is properly tightened, you should be able to lift each edge of the walking belt 3 to 4 in. (8 to 10 cm) off the walking platform. **Be careful to keep the walking belt centered.** Then, plug in the power cord, insert the key, and walk on the treadmill for a few minutes. Repeat until the walking belt is properly tightened.

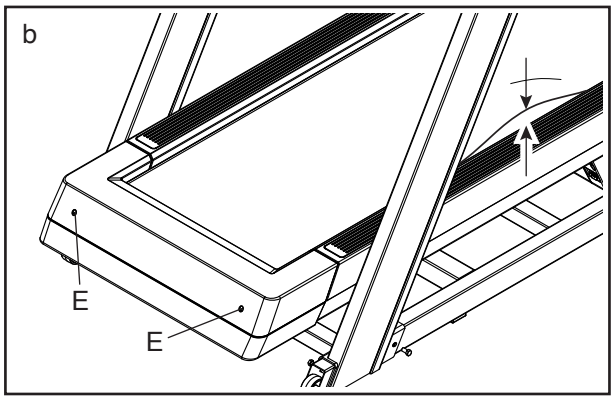

c. The treadmill features a walking belt coated with high-performance lubricant. **IMPORTANT: Never apply silicone spray or other substances to the walking belt or the walking platform unless instructed to do so by an authorized service representative. Such substances may deteriorate the walking belt and cause excessive wear.** If you suspect that the walking belt needs more lubricant, please see TROUBLESHOOTING on page 25 for further assistance.

d. If the walking belt still slows when walked on, please see TROUBLESHOOTING on page 25 for further assistance.

SYMPTOM: The walking belt is off-center

a. First, remove the key and **UNPLUG THE POWER CORD. If the walking belt has shifted to the left,** use the hex key to turn the indicated idler roller screw counterclockwise 1/2 of a turn; **if the walking belt has shifted to the right,** turn the idler roller screw clockwise 1/2 of a turn. **Be careful not to overtighten the walking belt.** Then, plug in the power cord, insert the key, and walk on the treadmill for a few minutes. Repeat until the walking belt is centered.

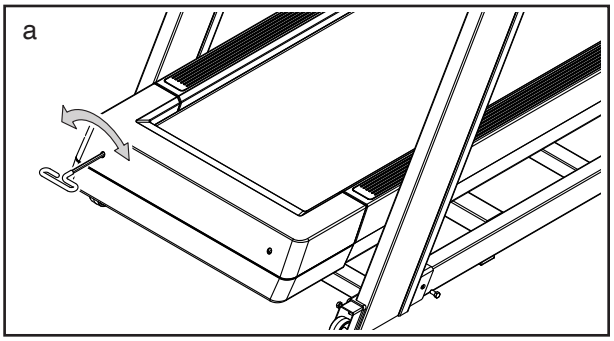

SYMPTOM: The walking belt slips when walked on

a. First, remove the key and **UNPLUG THE POWER CORD.** Using the hex key, turn both idler roller screws clockwise, 1/4 of a turn. When the walking belt is correctly tightened, you should be able to lift each edge of the walking belt 3 to 4 in. (8 to 10 cm) off the walking platform. **Be careful to keep the walking belt centered.** Then, plug in the power cord, insert the key, and walk on the treadmill for a few minutes. Repeat until the walking belt is properly tightened.

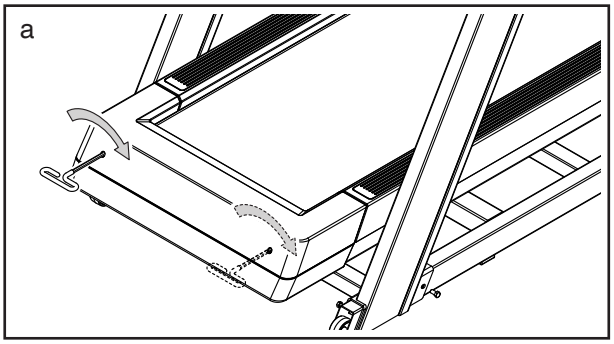

EXERCISE GUIDELINES

⚠WARNING: Before beginning this or any exercise program, consult your physician. This is especially important for persons over age 35 or persons with pre-existing health problems.

These guidelines will help you to plan your exercise program. For detailed exercise information, obtain a reputable book or consult your physician. Remember, proper nutrition and adequate rest are essential for successful results.

EXERCISE INTENSITY

Whether your goal is to burn fat or to strengthen your cardiovascular system, exercising at the proper intensity is the key to achieving results. You can use your heart rate as a guide to find the proper intensity level. The chart below shows recommended heart rates for fat burning and aerobic exercise.

165	155	145	140	130	125	115	♥
145	138	130	125	118	110	103	♥
125	120	115	110	105	95	90	♥
20	30	40	50	60	70	80	

To find the proper intensity level, find your age at the bottom of the chart (ages are rounded off to the nearest ten years). The three numbers listed above your age define your "training zone." The lowest number is the heart rate for fat burning, the middle number is the heart rate for maximum fat burning, and the highest number is the heart rate for aerobic exercise.

Burning Fat—To burn fat effectively, you must exercise at a low intensity level for a sustained period of time. During the first few minutes of exercise, your body uses carbohydrate calories for energy. Only after the first few minutes of exercise does your body begin to use stored fat calories for energy. If your goal is to burn fat, adjust the intensity of your exercise until your heart rate is near the lowest number in your training zone. For maximum fat burning, exercise with your heart rate near the middle number in your training zone.

Aerobic Exercise—If your goal is to strengthen your cardiovascular system, you must perform aerobic exercise, which is activity that requires large amounts of oxygen for prolonged periods of time. For aerobic exercise, adjust the intensity of your exercise until your heart rate is near the highest number in your training zone.

HOW TO MEASURE YOUR HEART RATE

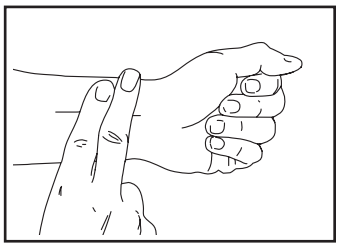

To measure your heart rate, exercise for at least four minutes. Then, stop exercising and place two fingers on your wrist as shown. Take a six-second heartbeat count, and multiply the result by 10 to find your heart rate. For example, if your six-second heartbeat count is 14, your heart rate is 140 beats per minute.

WORKOUT GUIDELINES

Warming Up—Start with 5 to 10 minutes of stretching and light exercise. A warm-up increases your body temperature, heart rate, and circulation in preparation for exercise.

Training Zone Exercise—Exercise for 20 to 30 minutes with your heart rate in your training zone. (During the first few weeks of your exercise program, do not keep your heart rate in your training zone for longer than 20 minutes.) Breathe regularly and deeply as you exercise; never hold your breath.

Cooling Down—Finish with 5 to 10 minutes of stretching. Stretching increases the flexibility of your muscles and helps to prevent post-exercise problems.

EXERCISE FREQUENCY

To maintain or improve your condition, complete three workouts each week, with at least one day of rest between workouts. After a few months of regular exercise, you may complete up to five workouts each week, if desired. Remember, the key to success is to make exercise a regular and enjoyable part of your everyday life.

PART LIST

Model No. NTL39225.0 R0724D

Key No.	Qty.	Description
1	4	3/8" x 4 3/4" Screw
2	32	#8 x 5/8" Screw
3	10	3/8" Star Washer
4	12	#8 x 5/8" Flat Head Screw
5	60	#8 x 3/4" Screw
6	4	#8 Belt Guide Screw
7	6	#8 x 3/4" Tek Screw
8	6	1/4" Flat Washer
9	8	#8 x 3/4" Washer Screw
10	6	#8 x 5/8" Pan Head Screw
11	4	5/16" x 1 1/2" Screw
12	2	#8 x 1 1/2" Screw
13	2	1/4" x 2 1/2" Washer Screw
14	1	M8 x 32mm Bolt
15	1	M8 x 51mm Bolt
16	20	Mushroom Fastener
17	11	#8 x 1/2" Washer Head Screw
18	6	3/8" x 3/4" Screw
19	2	M8 Nut
20	2	5/16" Motor Bolt
21	2	3/8" x 2 3/8" Screw
22	4	3/8" x 2 3/4" Screw
23	3	#8 Star Washer
24	1	Primary Display
25	4	5/16" Flat Washer
26	2	3/8" Nut
27	4	5/16" Nut
28	8	1/4" Nut
29	2	Belt Guide
30	1	Walking Platform
31	1	Walking Belt
32	1	Left Foot Rail
33	1	Right Foot Rail
34	1	Idler Roller
35	1	Belly Pan Cover
36	1	Belly Pan
37	1	Power Switch
38	3	Square Grommet
39	1	Power Cord Grommet
40	1	Power Cord
41	2	Wire Tie
42	1	Drive Roller/Pulley
43	2	Foot Rail Cover
44	4	1/4" External Star Washer
45	2	Small Pivot Bushing
46	1	Belt
47	1	Upper Front Cover
48	1	Lower Front Cover
49	1	Left Upright Cover
50	1	Right Upright Cover
51	4	Large Cushion
52	1	Base Wire
53	4	Small Cushion
54	4	Large Pivot Bushing
55	1	Electronics Cover
56	1	Incline Motor Top Cover
57	6	Fastener Receptacle
58	1	Incline Motor Bottom Cover
59	4	Incline Motor Bushing
60	1	Incline Motor
61	1	Electronics Bracket
62	1	Controller
63	1	Resistor
64	1	Drive Motor
65	2	#8 x 5/8" Machine Screw
66	1	Lower Frame
67	8	Fan Screw
68	1	Left Outside Frame Cover
69	1	Left Inside Frame Cover
70	1	Right Inside Frame Cover
71	1	Right Outside Frame Cover
72	2	Wheel
73	4	Base Pad
74	1	Base
75	1	Upright Wire
76	3	Round Grommet
77	2	Leveling Foot
78	2	Axle
79	2	Base Cap
80	2	Cover Support
81	1	Cover Cap
82	1	Left Upright
83	1	Right Upright
84	4	5/16" x 3/4" Screw
85	1	Upper Frame
86	6	#4 x 3/8" Screw
87	1	Access Cover
88	1	Key
89	1	Right Handrail Top
90	1	Left Handrail Top
91	1	Upper Display Cover
92	1	Display Bracket
93	1	Display
94	1	Accessory Tray
95	1	Upper Frame Cover
96	1	Left Pivot Cover
97	1	Lower Display Cover
98	1	Left Handrail Bottom
99	1	Right Handrail Bottom
100	1	Right Pivot Cover

Key No.	Qty.	Description
101	1	1" Plastic Washer
102	4	M3 x 12mm Screw
103	1	Power Supply
104	1	Incline Motor Controller
105	4	Standoff
106	2	Fan
107	1	M30 Nut
108	2	Belly Pan Grommet
109	1	Metal Spacer
110	1	Plastic Spacer
111	1	Pivot Plate
112	1	Pivot Front Cover
113	1	Pivot Back Cover
114	1	Pivot Bracket
115	1	Small Saddle Bracket
116	1	Pivot Cover
117	1	Large Saddle Bracket
118	4	M6 x 16mm Screw
119	5	M4 x 10mm Screw
120	4	M6 x 25mm Screw
121	10	Clip Nut
122	2	#8 Locknut
123	2	1/4" x 2 1/2" Washer Screw
*	–	Assembly/Adjustment Toolkit
*	–	User's Manual

Note: Specifications are subject to change without notice. For information about ordering replacement parts, see the back cover of this manual. *These parts are not illustrated.

EXPLODED DRAWING A

Model No. NTL39225.0 R0724D

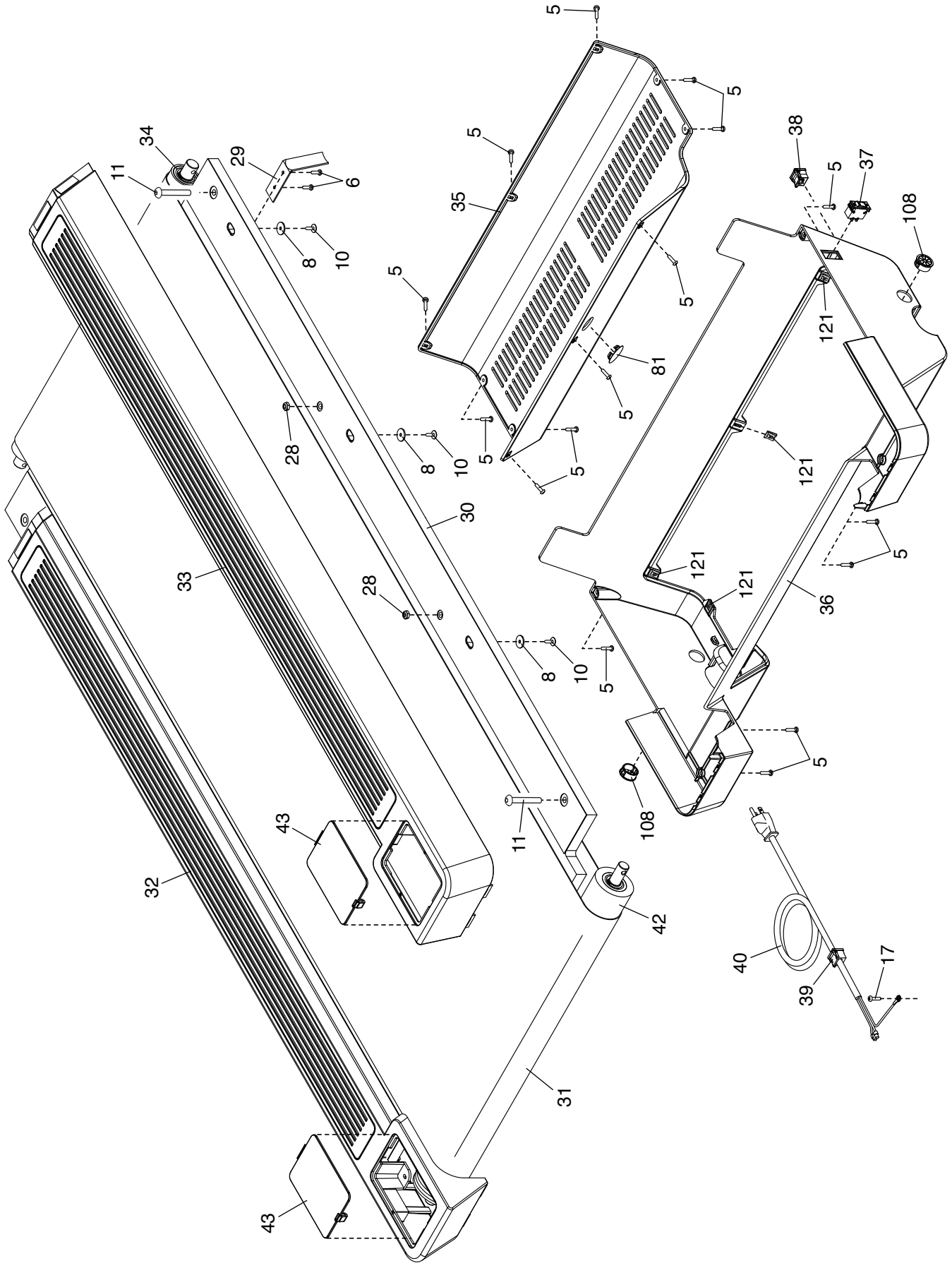

EXPLODED DRAWING B

Model No. NTL39225.0 R0724D

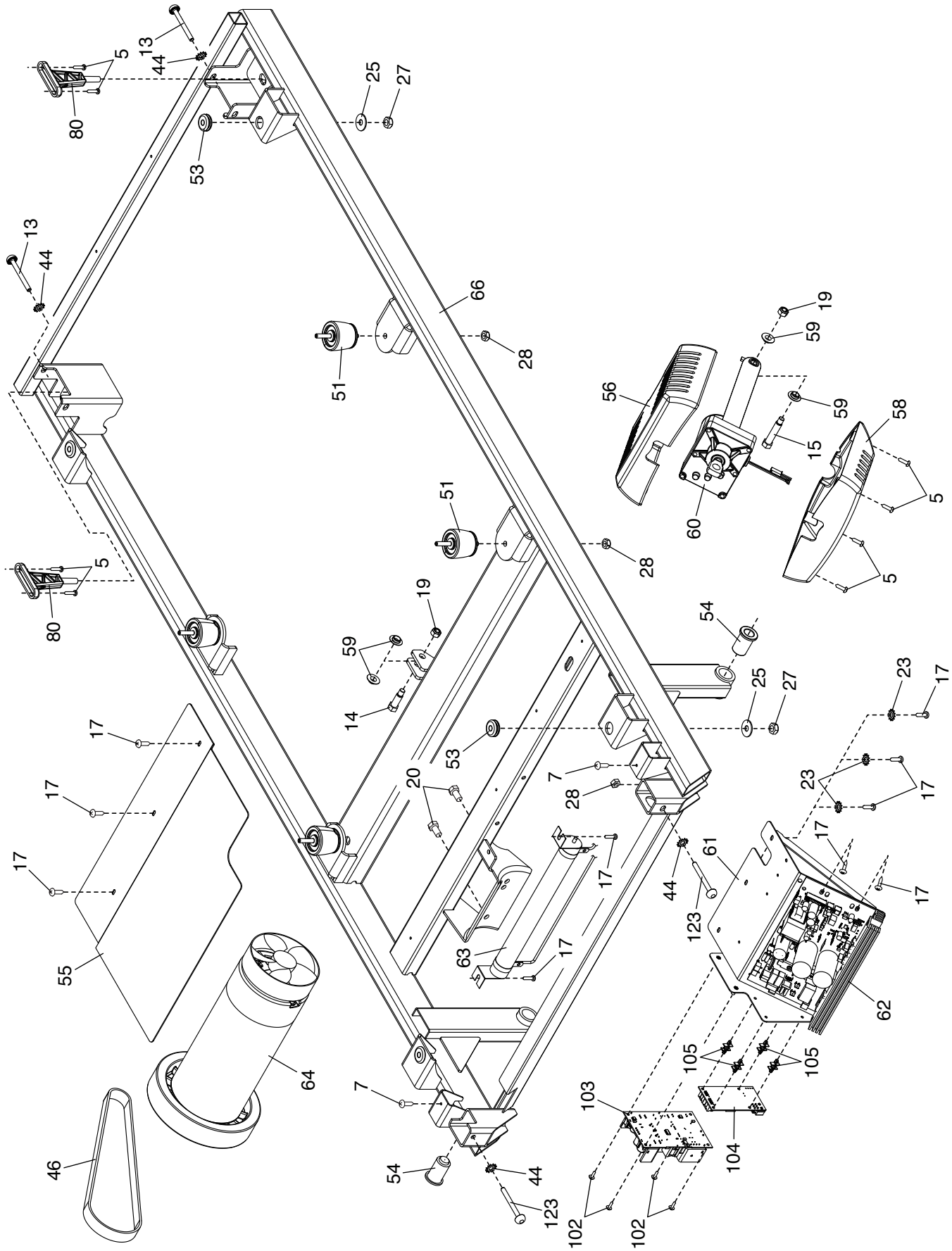

EXPLODED DRAWING C

Model No. NTL39225.0 R0724D

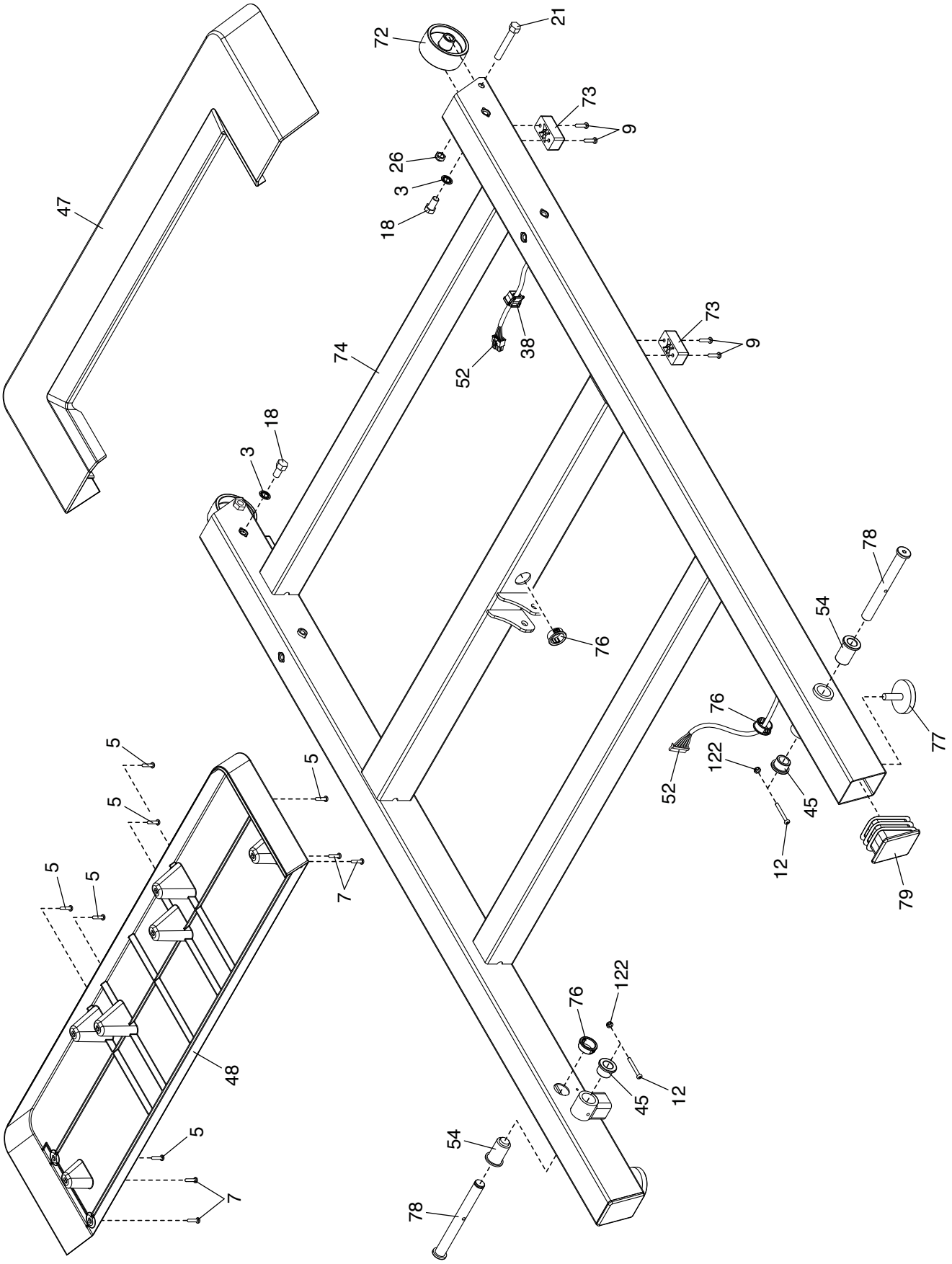

EXPLODED DRAWING D

Model No. NTL39225.0 R0724D

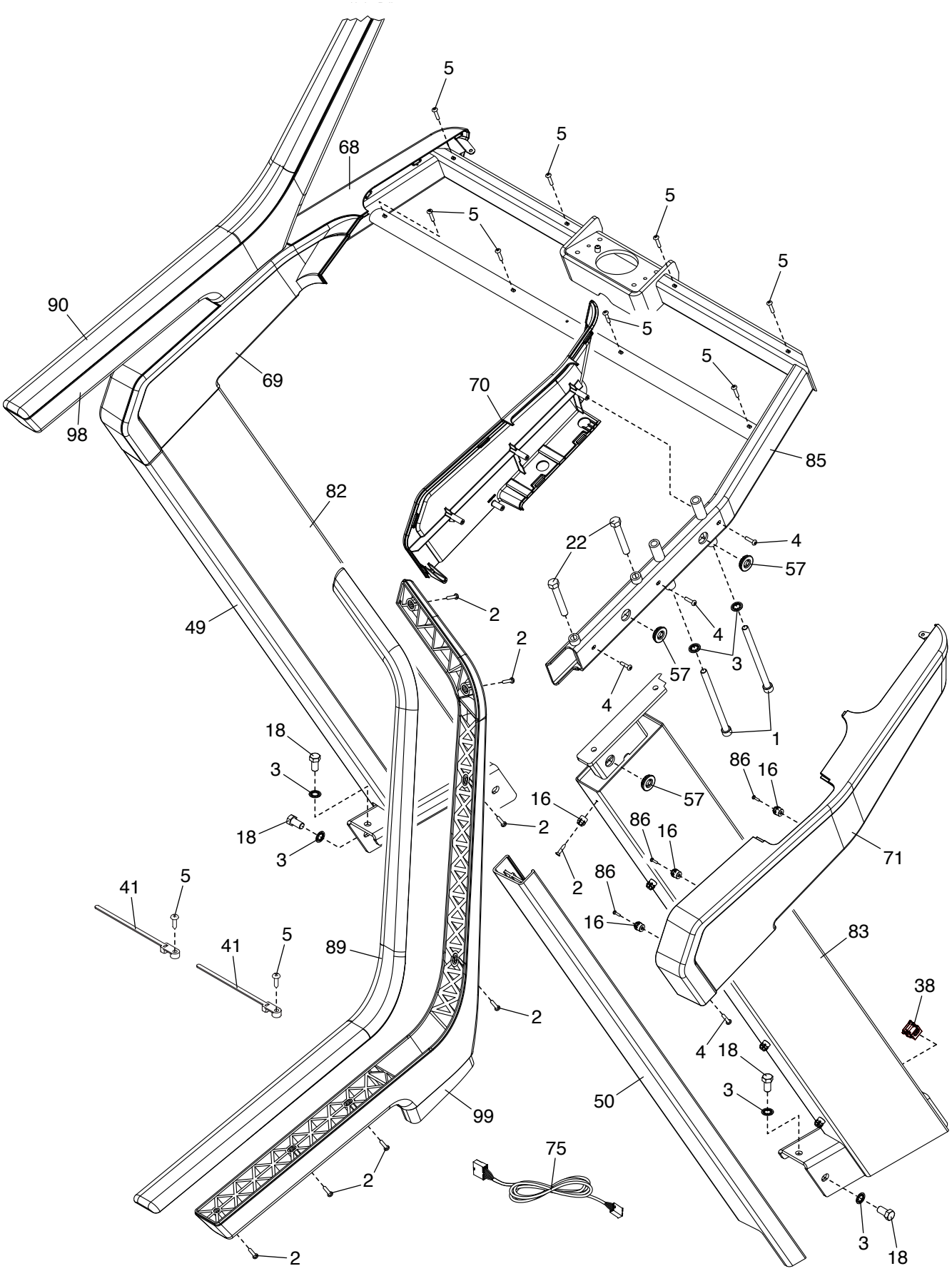

EXPLODED DRAWING E

Model No. NTL39225.0 R0724D

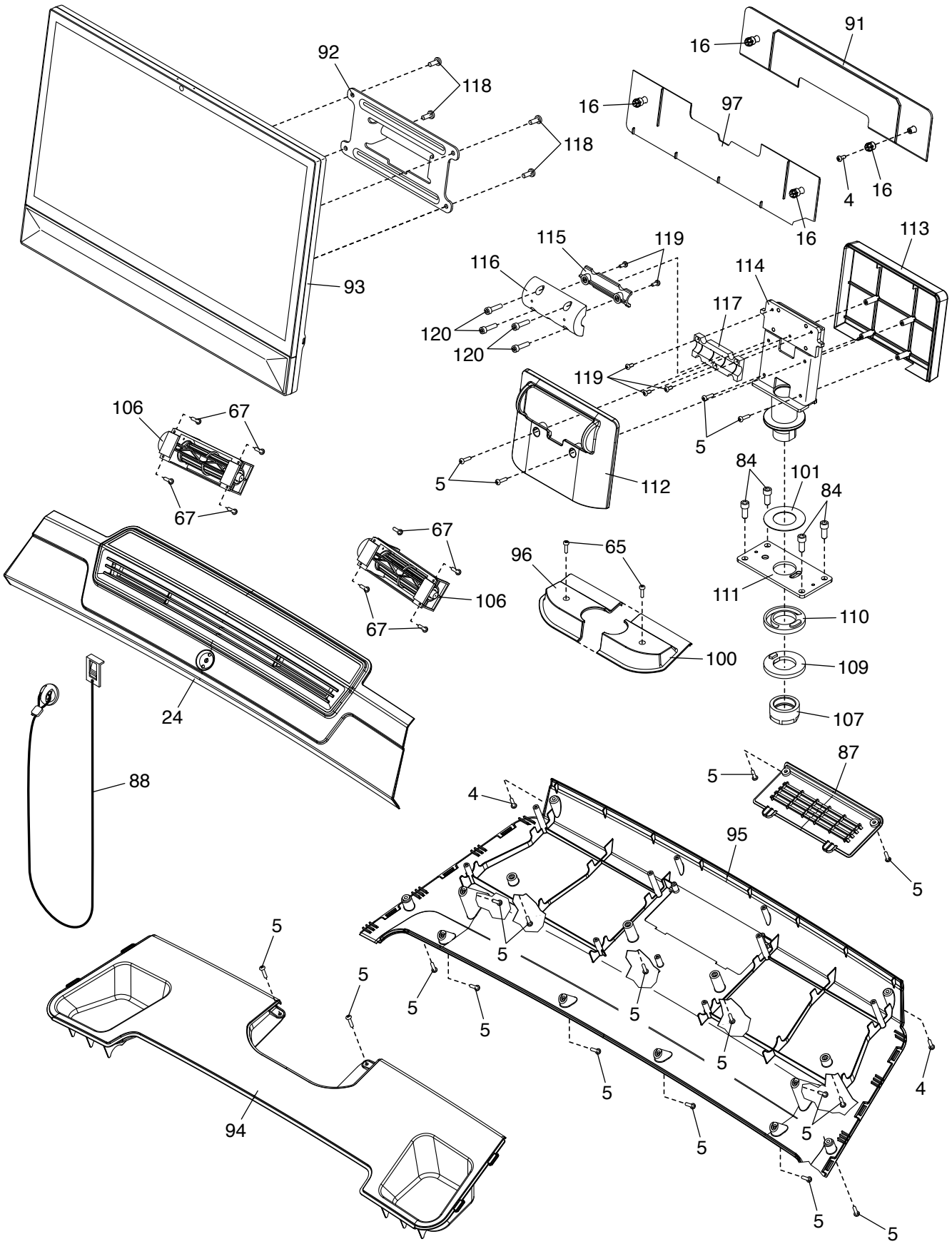

ORDERING REPLACEMENT PARTS

To order replacement parts, please see the front cover of this manual. To help us assist you, be prepared to provide the following information when contacting us:

- the model number and serial number of the product (see the front cover of this manual)
- the name of the product (see the front cover of this manual)
- the key number and description of the replacement part(s) (see the PART LIST and the EXPLODED DRAWING near the end of this manual)

LIMITED WARRANTY

iFIT Inc. (iFIT) warrants this product to be free from defects in workmanship and material, under normal use and service conditions. The drive motor is warranted for the lifetime of the original purchaser (customer). The frame is warranted for ten (10) years from the date that you receive this product. Parts are warranted for two (2) years. The tablet and labor are warranted for one (1) year.

This warranty extends only to the original purchaser (customer) and is not transferrable. iFIT's obligation under this warranty is limited to repairing or replacing, at iFIT's discretion, the product through one of its authorized service providers. All repairs for which warranty claims are made must be preauthorized by iFIT. If replacement parts are shipped while the product is under warranty, the customer will be responsible for a minimal handling charge. For in-home service, the customer may be responsible for a minimal trip charge. This warranty does not extend to freight damage to the product. This warranty will automatically be voided by the following conditions: (1) if the product is used as a store display model, (2) if the product is purchased or transported outside the USA, (3) if any instruction or warning in this manual is not followed, (4) if the product is abused or improperly or abnormally used, (5) if the product is modified to alter functionality or capability without the written permission of iFIT, or (6) if the product is used for commercial or rental purposes. No other warranty beyond that specifically set forth above is authorized by iFIT.

iFIT is not responsible or liable for the following damages: (1) indirect, special, or consequential damages arising out of or in connection with the use or performance of the product; (2) damages with respect to any economic loss, loss of property, loss of revenues or profits, loss of enjoyment or use, or costs of removal or installation; or (3) other consequential damages of any kind. Some states do not allow the exclusion or limitation of incidental or consequential damages. Accordingly, the above limitation may not apply to the customer.

The warranty extended hereunder is in lieu of any and all other warranties, and any implied warranties of merchantability or fitness for a particular purpose are limited in their scope and duration to the terms set forth herein. Some states do not allow limitations on how long an implied warranty lasts. Accordingly, the above limitation may not apply to the customer. This warranty provides specific legal rights; the customer may have other rights that vary from state to state.

For warranty service, please go to my.iFIT.com. Please be prepared to provide the model number and serial number of the product (see the front cover of this manual).

iFIT Inc., 1500 S. 1000 W., Logan, UT 84321-9813

Part No. 454534 R0724D

Printed in China © 2024 iFIT Inc.