VISIONAIR™

OWNER'S MANUAL

30" OSCILLATING HIGH VELOCITY WALL MOUNT FAN

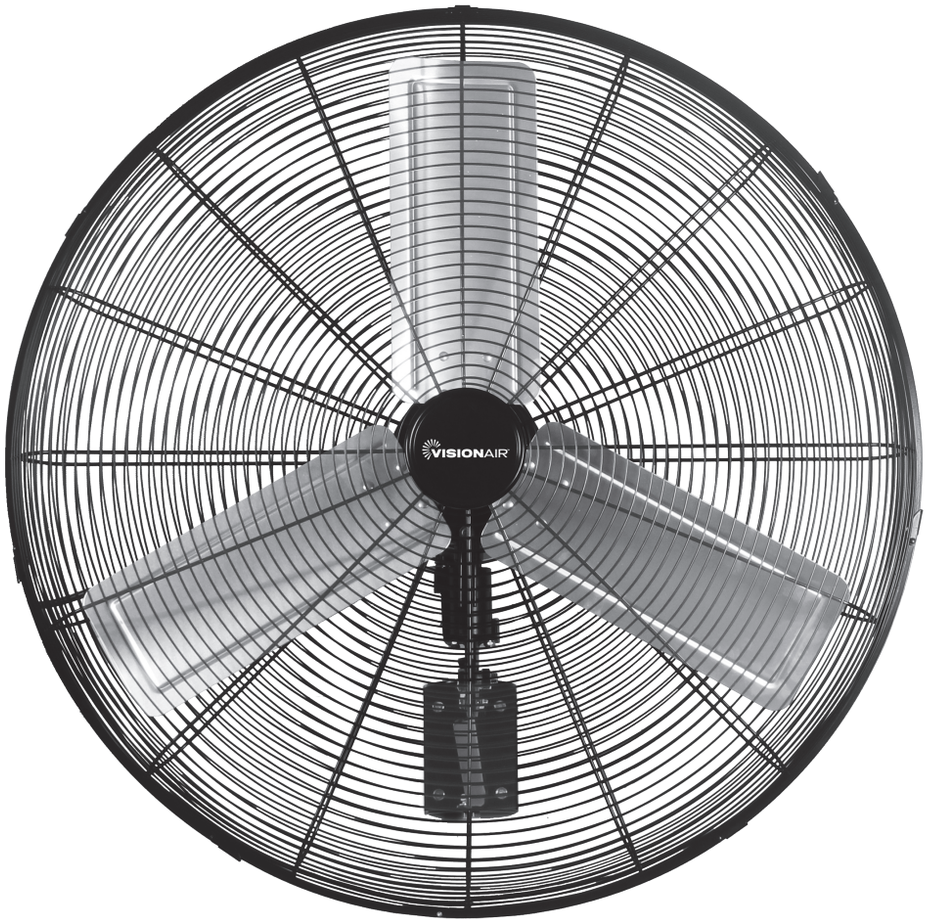

MODEL 1VAFWLHV30OS

CONTENTS

INTENDED USE 3
IMPORTANT INSTRUCTIONS 3
PARTS 4
ASSEMBLY 5
INSTALLATION 5
OPERATING INSTRUCTIONS 5
CLEANING 6
MAINTENANCE 6

SAFETY INFORMATION

INTENDED USE

Use only with electrical wiring that is in good working order and that meets applicable codes and ordinances. If you have any questions whether your wiring is adequate, consult a qualified electrician.

While using your fan, you should follow the IMPORTANT INSTRUCTIONS listed below. As part of those instructions, we have used the word **"WARNING"** to indicate the level of hazard: **WARNING** indicates a hazard which, if not avoided, could result in injury or death.

IMPORTANT INSTRUCTIONS

As with all electrical appliances, basic safety precautions should always be followed to reduce the risk of electric shock, fire, or injury to persons, including the following precautions:

- Read all the instructions before using this fan.
- Use this fan only as described in this manual. Any other use not recommended by the manufacturer may cause electrical shock, fire or injury to persons.
- Do not operate the fan with a damaged power cord or after the fan malfunctions or has been dropped in any manner.
- Use of extreme caution is necessary when any fan is used by or near children, disabled persons or pets and whenever the fan is left operating unattended.
- Do not place the fan on a small, unlevel, uneven or any surface which might allow fan to tip or fall.
- For proper operation, fan should be placed on a smooth, non-combustible, level surface.
- Always unplug fan when not in use, when moving from place to place, when assembling or disassembling parts, and before cleaning.
- The use of attachments, not recommended or sold by the manufacturer, may cause hazards.
- Do not use outdoors.
- Do not use fan in window. Rain may cause electrical hazard (for non-window models).
- Do not operate the fan with blade guards or any safety device removed.
- Avoid the use of extension cords due to risk of fire. If an extension cord must be used, the cord must be minimum 14 AWG and rated not less then 1875 watts.
- Do not run power cord under carpeting. Do not cover cord with throw rugs, runners or the like. Arrange cord away from traffic area where it will not be tripped over.
- Do not insert or allow any object to enter any openings on the fan. Doing so may cause electric shock and/or fire hazard. Avoid contact with moving parts.
- This appliance is not intended for use by persons (including children) with reduced physical, sensory or mental capabilities or lack of experience and knowledge, unless they have been given supervision or instruction concerning use of the appliance by a person responsible for their safety.
- Children should be supervised to ensure they do not play with the appliance.

READ & SAVE THESE INSTRUCTIONS!

⚠ WARNING SHOCK HAZARD

Use your fan only in dry environments. This fan is not intended for use in a bathroom, laundry area, or similar locations, or near sinks, washing machines, swimming pools or other sources of water. Never locate fan where it may fall into a bathtub or other water receptacle. Do not use in damp environments such as flooded basements.

⚠ WARNING HOT SURFACES

Do not touch fan motor when in use. This motor is hot when in use, to avoid burns, do not let bare skin touch hot surfaces.

⚠ WARNING FIRE HAZARD

Fans have arcing or sparking parts inside. Do not use near combustible materials or flammable gases or sources of heat. Do not use in areas where gasoline, paint or flammable materials are used or stored. To prevent a possible fire, do not block air intakes or exhaust in any manner. Do not insert or allow foreign objects to enter any ventilation or exhaust opening as this may cause an electric shock, fire, or damage the fan.

⚠ WARNING ELECTRICAL SHOCK HAZARD

Do not use with damaged cord or plug. Use with adequate electrical system that is up to code.

⚠ CAUTION TO PREVENT ELECTRIC SHOCK, this product has a three prong grounded plug that must be inserted into a matching properly grounded outlet to reduce the risk of electrical shock. Do not attempt to defeat this safety feature.

⚠ WARNING TO REDUCE THE RISK OF FIRE OR ELECTRIC SHOCK, do not use this product with any solid-state speed control device.

DO NOT operate any fan with a damaged cord or plug or after fan malfunctions, has been dropped or damaged in any manner. Do not operate fan with a broken blade, safety cage or any visual imperfections. Disconnect power before servicing. For repairs covered under warranty, see warranty statement. For all other repairs contact VisionAir Customer Service by telephone or mail for information and assistance.

DO NOT run power cord under carpeting. Do not cover cord with throw rugs, runners or the like. Arrange cord away from traffic area where it will not be tripped over. Avoid the use of extension cords due to risk of fire. If an extension cord must be used, the cord must be minimum 14 AWG and rated not less then 1875 watts. Do not use an extension cord unless the plug can be completely inserted into its receptacle. Unplug the fan when not in use. Do not operate fan with its ventilation obstructed.

PARTS

ITEM #	PART DESCRIPTION
1.	Screw
2.	Front Guard
3.	Fan Blade
4.	Set Screw
5.	Back Guard
6.	Oscillating Switch
7.	Motor
8.	Speed Switch
9.	Wall Bracket
10.	Angle Support Bracket
11.	Position (Screw, Washer, Nut)
12.	Pivot (Bolt, Washer, Nut)

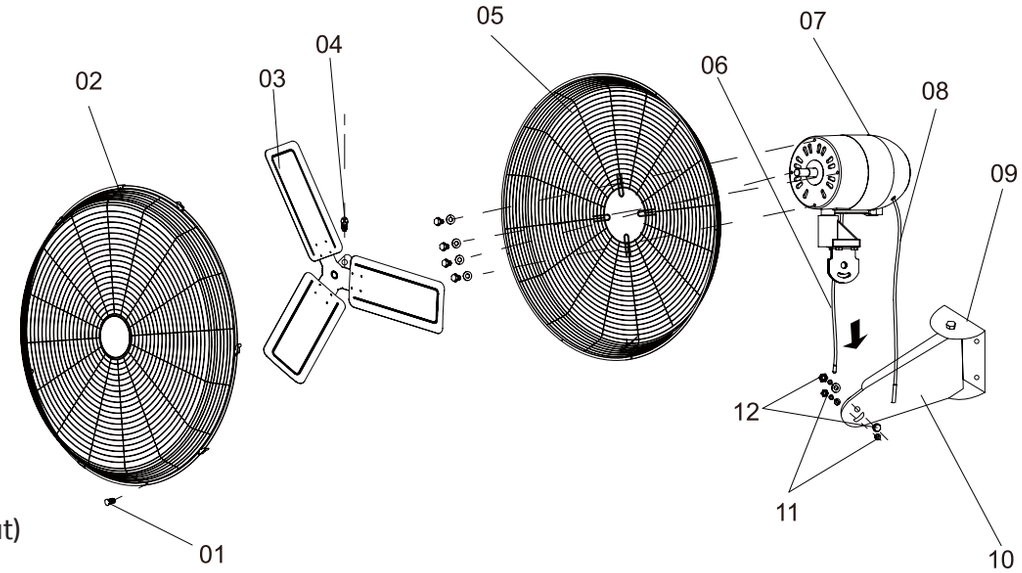

ASSEBLY, INSTALLATION & USAGE

ASSEMBLY

1. Install the wall bracket to the wall per the instructions above, making sure the installation can support the fan.
2. Attach the angle support bracket to the wall mount bracket, using the bolt, washer and nut provided.
3. Attach the back guard to the fan motor, using the four screws and washers provided.
4. Attach the fan blade to the motor shaft and tighten the set screw securely to hold it in place.
5. Attach the front guard to the back guard using the screws provided.

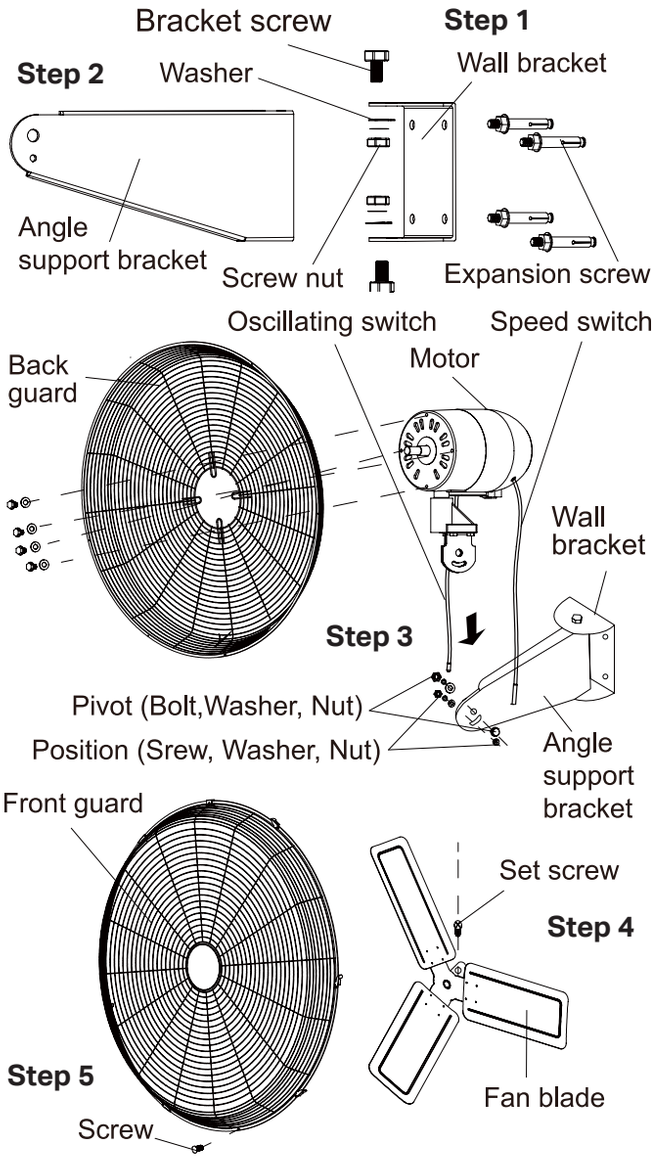

INSTALLATION

WALL INSTALLATION

Use the following information as a guideline only. It is the user's responsibility to be sure the location and the wall surface can handle the weight of this fan.

Use wall bracket as a template for locating the holes to be drilled.

After determining the hole locations, use an appropriate sized drill bit and, drill holes through mounting surface. It is recommended that a minimum of grade 5 fasteners be used. The following are acceptable surfaces for mounting wall mount assembly.

STEEL SURFACE

When mounting to a steel surface, such as vertical I-beam, drill through holes at pre-marked locations, using a 9/32" drill bit. Attach wall mount assembly to mounting surface using 1/4"- 20 hex screw, in combination with 1/4" flat washers, 1/4" lock washers, and 1/4"- 20 hex nuts.

MASONRY SURFACE

When mounting to a masonry surface use a 1/4" expansion type bolt or 1/4" masonry lag with shield designed to handle the weight of this fan. Drill holes at pre-marked locations using appropriate sized drill bit as recommended for the fastener.

OPERATING INSTRUCTIONS

1. After the fan has been mounted to the wall, be sure that it is secure.
2. Select desired direction of air flow by tilting the fan upward or downward.
3. Plug unit into electrical outlet.
4. Pull the chain on the motor assembly to set desired setting (high and low)
5. Always turn off (0-OFF) and unplug fan after

CLEANING & MAINTENANCE

CLEANING

⚠ CAUTION Before cleaning the fan be sure to disconnect power cord from the plug. Clean the grille surface with a clean damp cloth. Do not use harsh chemical or abrasive cleaners. DO NOT IMMERSE THE FAN OR ANY WIRES IN WATER. Allow fan to dry completely before use. Periodic grille cleaning with a vacuum will prevent dust build up. The motor is sealed and does not require any interior maintenance, cleaning or lubrication.

MAINTENANCE

The Internal motor bearings are permanently lubricated at the factory and do not require any additional lubrication.

REPAIR

DO NOT OPERATE THE FAN WITHOUT THE GRILLE IN PLACE. DO NOT USE THE FAN IF IT HAS MALFUNCTIONED OR BECOME DAMAGED IN ANY WAY.

STORAGE

Keep original carton for storage of the fan. Coil and tie the power cord to avoid damage during storage.

CONSUMER PRODUCT INFORMATION

For your own records, please attach a copy of your sales receipt to this manual. Also, write the store name/location and date purchased below:

Store Name: _____

Location: _____

Date Purchased:_____

NOTE: Proof of purchase is required for all warranty claims.

NOTE: As a result of continual improvements, the design and specifications of the product within may differ slightly to the unit illustrated on the packaging.

4560 W. 160th Street
Cleveland, OH 44135

833-950-1185 | support@visionairproducts.com

www.visionairproducts.com

Printed in China | 0124_M103