PX700HDH

Projector
User Guide

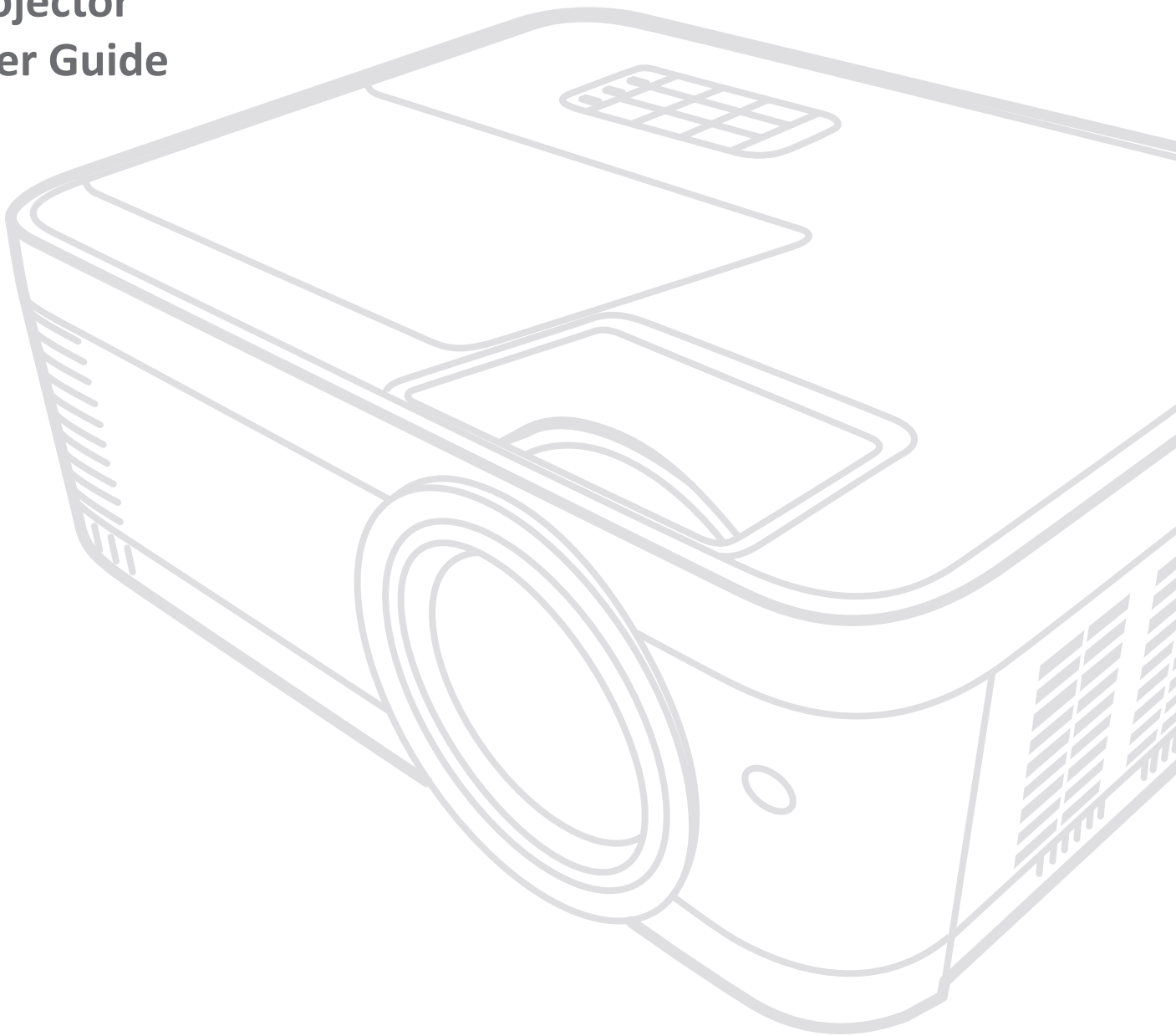

IMPORTANT: Please read this User Guide to obtain important information on installing and using your product in a safe manner, as well as registering your product for future service. Warranty information contained in this User Guide will describe your limited coverage from ViewSonic Corporation, which is also found on our web site at http://www.viewsonic.com in English, or in specific languages using the Regional selection box in the upper right corner of our website. “Antes de operar su equipo lea cu idadosamente las instrucciones en este manual”

Model No. VS20135
Model Name: PX700HDH

Thank you for choosing ViewSonic®

As a world-leading provider of visual solutions, ViewSonic® is dedicated to exceeding the world's expectations for technological evolution, innovation, and simplicity. At ViewSonic®, we believe that our products have the potential to make a positive impact in the world, and we are confident that the ViewSonic® product you have chosen will serve you well.

Once again, thank you for choosing ViewSonic®!

Safety Precautions - General

Please read the following **Safety Precautions** before you start using the projector.

- Keep this user guide in a safe place for later reference.
- Read all warnings and follow all instructions.
- Allow at least 20“ (50 cm) clearance around the projector to ensure proper ventilation.
- Place the projector in a well-ventilated area. Do not place anything on the projector that prevents heat dissipation.
- Do not place the projector on an uneven or unstable surface. The projector may fall over, causing personal injury or projector malfunction.
- Do not use if the projector is tilted at an angle of more than 10° degrees left or right, nor at an angle of more than 15° degrees forwards or backwards.
- Do not look straight at the projector lens during operation. The intense light beam may damage your eyes.
- Always open the lens shutter or remove the lens cap when the projector lamp is on.
- Do not block the projection lens with any objects when the projector is under operation as this could cause objects to become heated and deformed or even cause a fire.
- The lamp becomes extremely hot during operation. Allow the projector to cool for approximately 45 minutes prior to removing the lamp assembly for replacement.
- Do not use lamps beyond the rated lamp life. Excessive use of lamps beyond the rated life could cause them to break on rare occasions.
- Never replace the lamp assembly or any electronic component unless the projector is unplugged.
- Do not attempt to disassemble the projector. There are dangerous high voltages inside which may cause death if you should come into contact with live parts.
- When moving the projector, be careful not to drop or bump the projector on anything.
- Do not place any heavy objects on the projector or connection cables.
- Do not stand the projector on end vertically. Doing so may cause the projector to fall over, causing personal injury or projector malfunction.
- Avoid exposing the projector to direct sunlight or other sources of sustained heat. Do not install near any heat sources such as radiators, heat registers, stoves, or other devices (including amplifiers) that may increase the temperature of the projector to dangerous levels.

- Do not place liquids near or on the projector. Liquids spilled into the projector may cause it to fail. If the projector does become wet, disconnect it from the power supply and call your local service center to have the projector serviced.
- When the projector is under operation, you may sense some heated air and odor from its ventilation grill. It is a normal operation and not a defect.
- Do not attempt to circumvent the safety provisions of the polarized or grounding-type plug. A polarized plug has two blades with one wider than the other. A grounding-type plug has two blades and a third grounding prong. The wide and third blade are provided for your safety. If the plug does not fit into your outlet, obtain an adapter and do not attempt to force the plug into the outlet.
- When connecting to a power outlet, DO NOT remove the grounding prong. Please ensure grounding prongs are NEVER REMOVED.
- Protect the power cord from being treaded upon or pinched, particularly at the plug, and at the point where it emerges from the projector.
- In some countries, the voltage is NOT stable. This projector is designed to operate safely within a voltage between 100 to 240 volts AC, but could fail if power cuts or surges of ±10 volts occur. In areas where voltage may fluctuate or cut out, it is recommended that you connect your projector through a power stabilizer, surge protector, or uninterruptable power supply (UPS).
- If smoke, an abnormal noise, or a strange odor is present, immediately switch the projector off and call your dealer or ViewSonic®. It is dangerous to continue using the projector.
- Use only attachments/accessories specified by the manufacturer.
- Disconnect the power cord from the AC outlet if the projector is not being used for a long period of time.
- Refer all servicing to qualified service personnel.

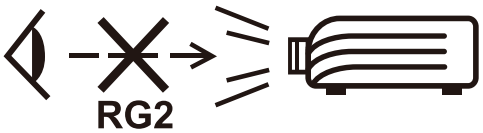

CAUTION: Possibly hazardous optical radiation is emitted from this product. As with any bright light source, do not stare into the beam, RG2 IEC 62471-5:2015.

Safety Precautions - Ceiling Mounting

Please read the following **Safety Precautions** before you start using the projector.

If you intend to mount the projector on the ceiling, we strongly recommend that you use a proper fitting projector ceiling mount kit and that you ensure it is securely and safely installed.

If you use an inappropriate projector ceiling mount kit, there is a safety risk that the projector may fall from the ceiling due to an improper attachment through the use of the wrong gauge or length screws.

You can purchase a projector ceiling mount kit from the place you purchased your projector. We recommend that you also purchase a separate security cable and attach it securely to both the anti-theft lock slot on the projector and the base of the ceiling mount bracket. This will perform the secondary role of restraining the projector should its attachment to the mounting bracket become loose.

Contents

Safety Precautions - General 3

Introduction 9

Package Contents 9

Product Overview 10

Projector 10

Controls and Functions 10

Connection Ports 11

Remote Control 12

Controls and Functions 12

Remote Control Effective Range 13

Replacing the Remote Control Batteries 13

Initial Setup 14

Choosing a Location 14

Projection Dimensions 15

16:9 Image on a 16:9 Screen 15

16:9 Image on a 4:3 Screen 16

Mounting the Projector 17

Preventing Unauthorized Use 18

Using the Security Slot 18

Using the Password Function 19

Setting a Password 19

Changing the Password 20

Disabling the Password Function 20

Forgetting the Password 21

Password Recall Procedure 21

Locking the Control Keys 22

Making Connections 23

Connecting to Power 23

Connecting to Video/Computer Sources 24

HDMI Connection 24

Connecting to Audio 24

Operation 25

Turning the Projector On/Off 25

Starting Up the Projector 25

First Time Activation 25

Shutting Down the Projector 26

Selecting an Input Source 27

Adjusting the Projected Image 28

Adjusting the Projector's Height and Projection Angle 28

Fine-Tuning the Image Size and Clarity 28

Correcting Keystone 29

Hiding the Image 30

Menu Functions 31

General On-Screen Display (OSD) Menu Operation 31

On-Screen Display (OSD) Menu Tree 32

DISPLAY Menu 37

IMAGE Menu 39

POWER MANAGEMENT Menu 42

BASIC Menu 45

ADVANCED Menu 48

SYSTEM Menu 51

INFORMATION Menu 53

Appendix 54

Specifications 54

Projector Dimensions 55

Timing Chart 55

IR Control Table 58

Address Code 59

Troubleshooting 60

Common Problems 60

LED Indicators 61

Maintenance 62

General Precautions 62

Cleaning the Lens 62

Cleaning the Case 62

Storing the Projector 62

Disclaimer 62

Regulatory and Service Information 63

Compliance Information 63
FCC Compliance Statement 63
Industry Canada Statement..... 63
CE Conformity for European Countries 64
Declaration of RoHS2 Compliance..... 65
Indian Restriction of Hazardous Substances 66
Product Disposal at End of Product Life 66
Copyright Information 67
Customer Service 68
Limited Warranty 69
Mexico Limited Warranty..... 72

Introduction

Package Contents

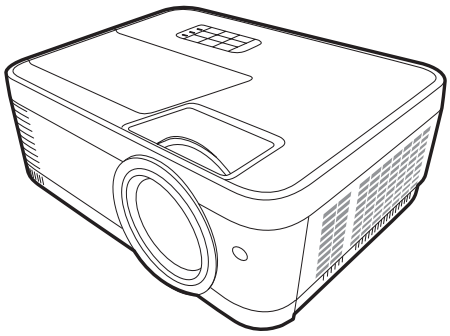

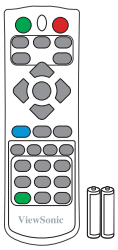

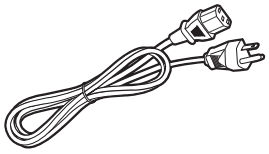

NOTE: The power cord and/or video cables included in your package may vary depending on your country. Please contact your local reseller for more information.

Product Overview

Projector

Controls and Functions

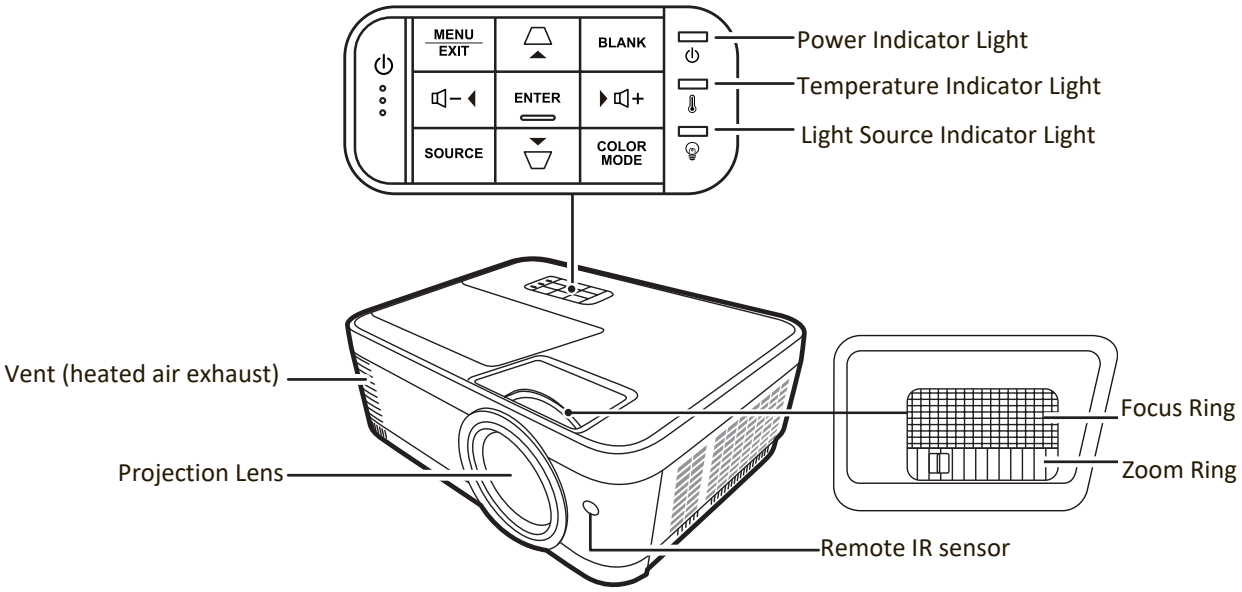

Key	Description
[⏻] Power	Toggles the projector between standby mode and Power On.
[⏢/⏢] Keystone Keys	Manually corrects distorted images resulting from an angled projection.
[🔊+ /🔊−] Volume Keys	Increases or decreases the volume level.
[◀/▶/▲/▼] Left/Right/Up/Down	Selects the desired menu items and makes adjustments when the On-Screen Display (OSD) Menu is activated.
Menu/Exit	Turns on or off the On-Screen Display (OSD) Menu.
Source	Displays the input source selection bar.
	Displays the HELP menu with a long press for 3 seconds.
Blank	Hides the screen picture.
Enter	Enacts the selected On-Screen Display (OSD) Menu item when the OSD Menu is activated.
Color Mode	Displays the color mode selection bar.

Connection Ports

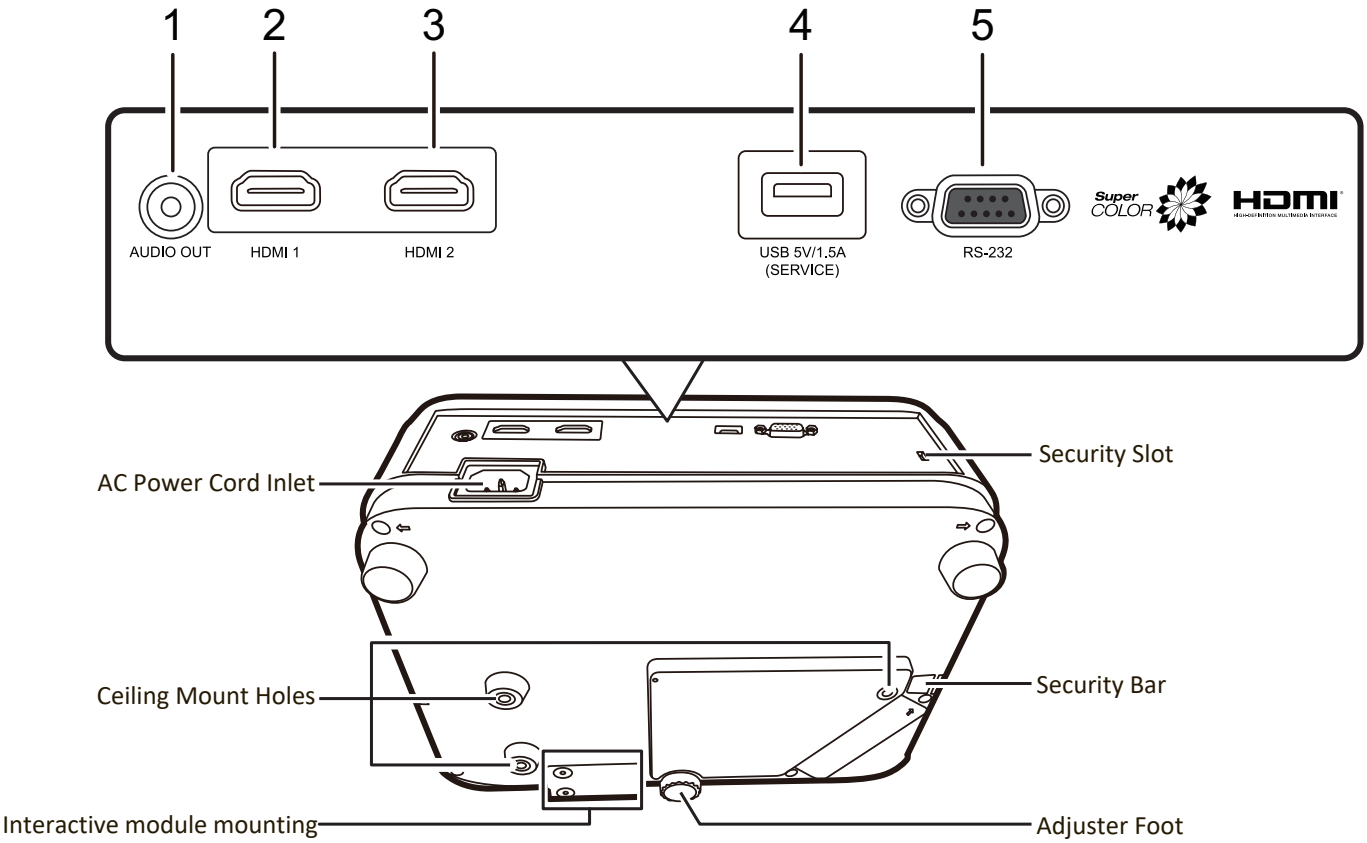

Port	Description
[1] AUDIO OUT	Audio signal output socket.
[2] HDMI 1	HDMI port.
[3] HDMI 2	HDMI port.
[4] USB 5V/1.5A (SERVICE)	USB Type A port for power supply.
[5] RS-232	RS-232 control port.

Remote Control

Controls and Functions

Button	Description
On/Off	Toggles between standby mode and Power On.
COMP	No function.
VIDEO	No function.
HDMI	Selects the source from the **HDMI** port(s) for display. Press this button again to switch between the two (2) ports if available.
Auto Sync	No function.
Source	Displays the source selection bar.
[/] Keystone Keys	Manually corrects distorted images resulting from an angled projection.
Enter	Enacts the selected OSD Menu item.

Button	Description
◀ Left/ ▶ Right ▲Up/ ▼Down	Selects the desired menu items and makes adjustments.
Menu	Turns on/off the On-Screen Display (OSD) Menu or goes back to previous OSD Menu.
(INFORMATION)	Displays the **INFORMATION** menu. Displays the **HELP** menu by a long press for 3 seconds.
Exit	Exits and saves menu settings.
Aspect	Displays the aspect ratio selection bar.
Freeze	Freezes the projected image.
Pattern	Displays embedded test pattern.
Blank	Hides the screen picture.
PgUp (Page Up)/ PgDn (Page Down)	Operates your display software program (on a connected PC) which responds to page up/down commands (like Microsoft PowerPoint). **NOTE:** Only available when a PC input signal is selected.
Eco Mode	Selects the **Eco** mode.
+ (Volume Up)	Increases the volume level.
− (Volume Down)	Decreases the volume level.
(Mute)	Toggles audio between on and off.
	Magnifies the projected picture size.
	Reduces the projected picture size.
Color Mode	Displays the color mode selection bar.

Remote Control Effective Range

To ensure proper function of the remote control follow the steps below:

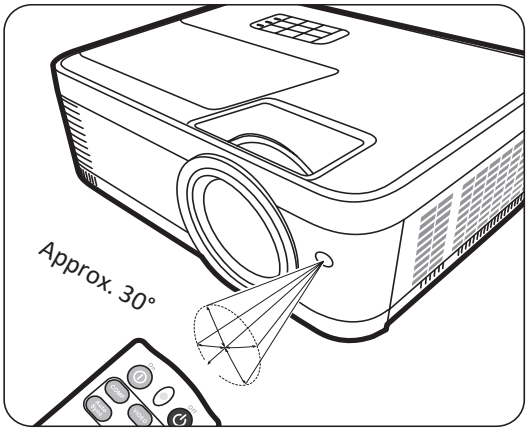

1. The remote control must be held at an angle within 30° perpendicular to the projector's IR remote control sensor(s).

2. The distance between the remote control and the sensor(s) should not exceed 8 m (26 ft.)

NOTE: Refer to the illustration for the location of the infrared (IR) remote control sensor(s).

Replacing the Remote Control Batteries

1. Remove the battery cover from the rear of the remote control by pressing the finger grip and sliding it down.
2. Remove any existing batteries (if necessary) and install two AAA batteries.

   NOTE: Observe the battery's polarities as indicated.

3. Replace the battery cover by aligning it with the base and pushing it back into position.

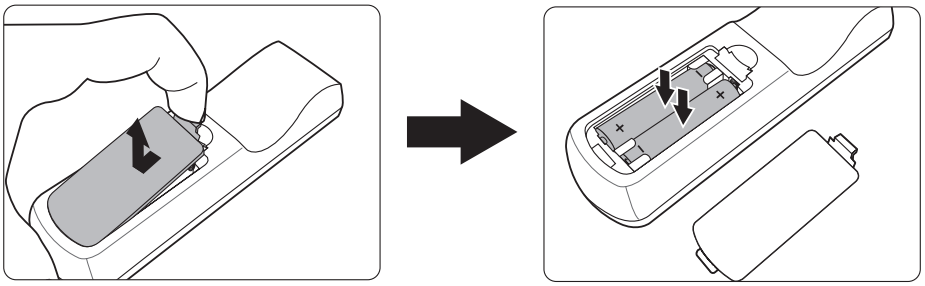

NOTE:

- Avoid leaving the remote control and batteries in excessive heat or a humid environment.
- Replace only with the same or equivalent type recommended by the battery manufacturer.
- Dispose of the used batteries according to the manufacturer's instructions and local environment regulations for your region.
- Never throw the batteries into a fire. There may be danger of an explosion.
- If the batteries are drained or if you will not be using the remote control for an extended period of time, remove the batteries to avoid damage to the remote control.

Initial Setup

This section provides detailed instructions for setting up your projector.

Choosing a Location

Personal preference and room layout will decide the installation location. Consider the following:

- Size and Position of your screen.
- Location of a suitable power outlet.
- Location and Distance between the projector and other equipment.

The projector is designed to be installed in one of the following locations:

1. Front Table

The projector is placed near the floor in front of the screen.

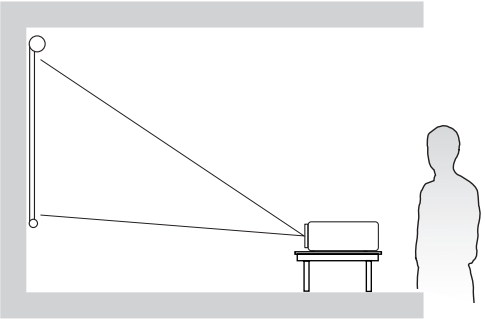

2. Front Ceiling

The projector is suspeneded upside-down from the ceiling in front of the screen.

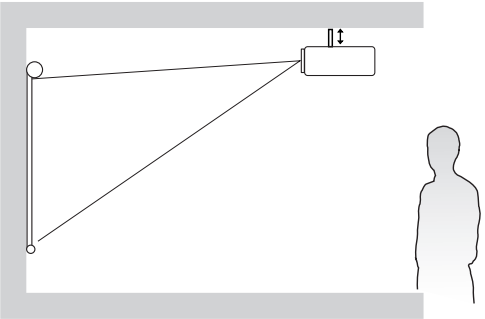

3. Rear Ceiling

The projector is suspended upside-down from the ceiling behind the screen.

NOTE: A special rear projection screen is required.

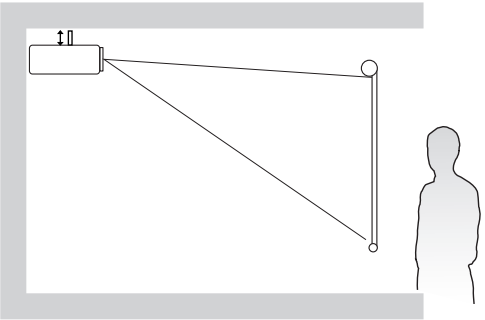

4. Rear Table

The projector is placed near the floor behind the screen.

NOTE: A special rear projection screen is required.

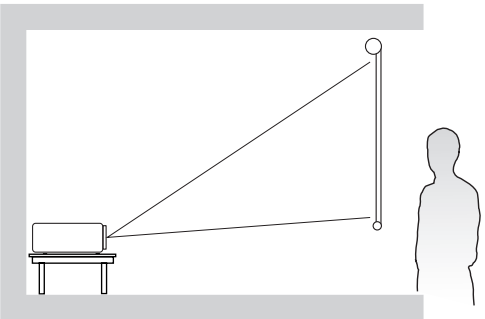

Projection Dimensions

NOTE: See "Specifications" on page 54 for the native display resolution of this projector.

- 16:9 Image on a 16:9 Screen

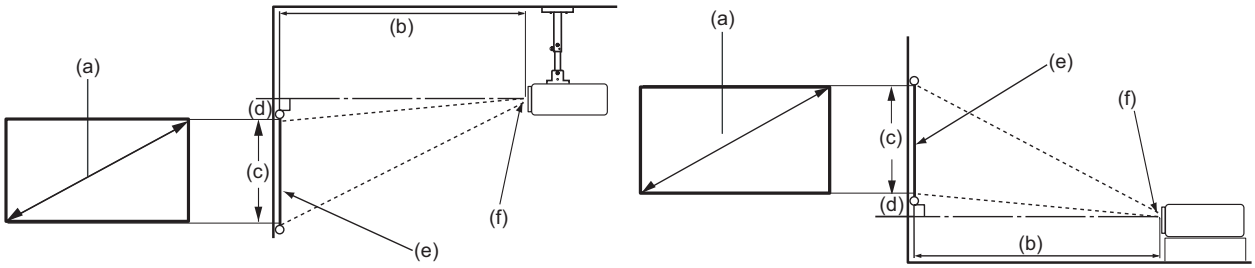

- 16:9 Image on a 4:3 Screen

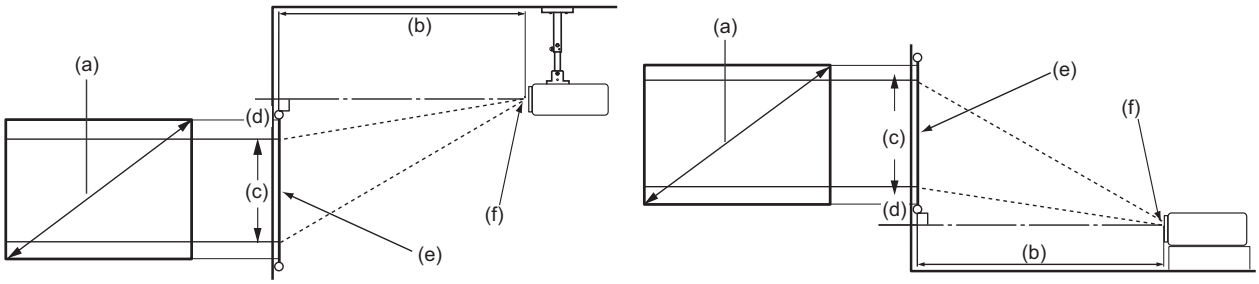

NOTE: (e) = Screen
(f) = Center of Lens

16:9 Image on a 16:9 Screen

(a) Screen Size		(b) Projection Distance				(c) Image Height		(d) Vertical Offset	
		minimum		maximum					
in.	mm	in.	mm	in.	mm	in.	mm	in.	mm
60	1524	77	1958	85	2154	29	747	2.4	59.8
70	1778	90	2284	99	2513	34	872	2.7	69.7
80	2032	103	2611	113	2872	39	996	3.1	79.7
90	2286	116	2937	127	3231	44	1121	3.5	89.7
100	2540	128	3263	141	3589	49	1245	3.9	99.6
110	2794	141	3589	155	3948	54	1370	4.3	109.6
120	3048	154	3916	170	4307	59	1494	4.7	119.5
130	3302	167	4242	184	4666	64	1619	5.1	129.5
140	3556	180	4568	198	5025	69	1743	5.5	139.5
150	3810	193	4895	212	5384	74	1868	5.9	149.4
160	4064	206	5221	226	5743	78	1992	6.3	159.4
170	4318	218	5547	240	6102	83	2117	6.7	169.4
180	4572	231	5874	254	6461	88	2241	7.1	179.3
190	4826	244	6200	269	6820	93	2366	7.5	189.3
200	5080	257	6526	283	7179	98	2491	7.8	199.2

16:9 Image on a 4:3 Screen

(a) Screen Size		(b) Projection Distance				(c) Image Height		(d) Vertical Offset	
		minimum		maximum					
in.	mm	in.	mm	in.	mm	in.	mm	in.	mm
60	1524	71	1797	78	1977	27	686	2.2	55
70	1778	83	2097	91	2306	32	800	2.5	64
80	2032	94	2396	104	2636	36	914	2.9	73
90	2286	106	2696	117	2965	41	1029	3.2	82
100	2540	118	2995	130	3295	45	1143	3.6	91
110	2794	130	3295	143	3624	50	1257	4.0	101
120	3048	142	3594	156	3954	54	1372	4.3	110
130	3302	153	3894	169	4283	59	1486	4.7	119
140	3556	165	4193	182	4613	63	1600	5.0	128
150	3810	177	4493	195	4942	68	1715	5.4	137
160	4064	189	4792	208	5272	72	1829	5.8	146
170	4318	200	5092	221	5601	77	1943	6.1	155
180	4572	212	5391	233	5930	81	2057	6.5	165
190	4826	224	5691	246	6260	86	2172	6.8	174
200	5080	236	5990	259	6589	90	2286	7.2	183

NOTE: It is recommended that if you intend to permanently install the projector, please physically test the projection size and distance using the actual projector in situ before you permanently install it.

Mounting the Projector

NOTE: If you buy a third-party mount, please use the correct screw size. Screw size can vary depending on the thickness of the mounting plate.

1. To ensure the most secure installation, please use a ViewSonic® wall or ceiling mount.
2. Ensure the screws used to attach a mount to the projector meet the following specifications:
   - Screw type: M4 x 8
   - Maximum Screw length: 8 mm

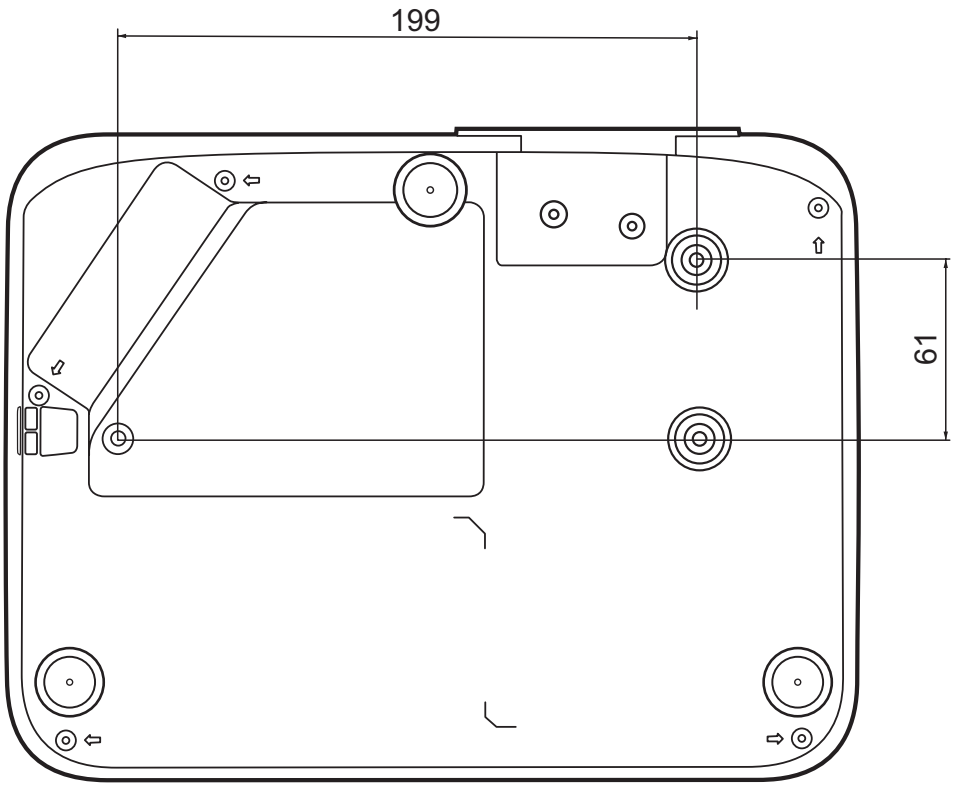

NOTE:

- Avoid installing the projector near a heat source.
- Keep at least a 10 cm gap between the ceiling and the bottom of the projector.

Preventing Unauthorized Use

The projector has several built-in security features to prevent theft, access, or accidental setting changes.

Using the Security Slot

To help prevent the projector from being stolen, use a security slot locking device to secure the projector to a fixed object.

Below is an example of setting up a security slot locking device:

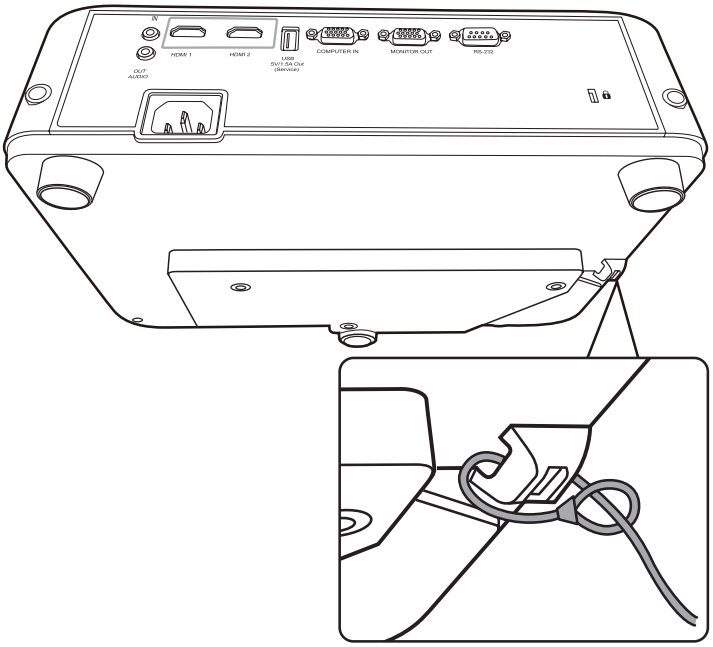

NOTE: The security slot can also be used as a safety anchor if the projector is mounted to the ceiling.

Using the Password Function

To help prevent unauthorized access or use, the projector offers a password security option. The password can be set through the On-Screen Display (OSD) Menu.

NOTE: Make note of your password, and keep it in a safe place.

Setting a Password

1. Press **Menu** to open the OSD Menu and go to: **SYSTEM** > **Security Settings** and press **Enter**.
2. Highlight **Power On Lock** and select **On** by pressing ◀/▶ .
3. As pictured to the right, the four arrow keys (▲, ▶, ▼, ◀) represent 4 digits (1, 2, 3, 4). Press the arrow keys to enter a six digit password.

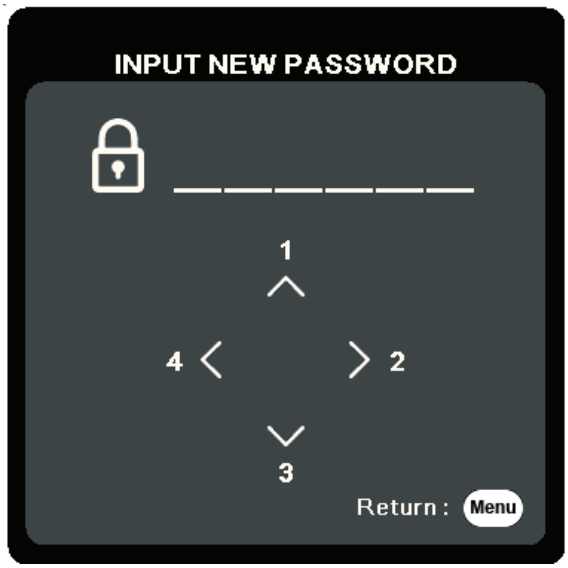

4. Confirm the new password by re-entering the new password. Once the password is set, the OSD Menu will return to the **Security Settings** page.
5. Press **Exit** to leave the OSD Menu.

NOTE: Once set, the correct password must be entered every time the projector is started.

Changing the Password

1. Press **Menu** to open the OSD Menu and go to: **SYSTEM** > **Security Settings** > **Change Password**.
2. Press **Enter**, the message, 'INPUT CURRENT PASSWORD' will appear.
3. Enter the old password.
   - » If the password is correct, the message, 'INPUT NEW PASSWORD' will appear.
   - » If the password is incorrect, a password error message will appear for 5 seconds followed by the message, 'INPUT CURRENT PASSWORD'. You can try again or press **Exit** to cancel.
4. Enter a new password.
5. Confirm the new password by re-entering the new password.
6. To leave the OSD Menu, press **Exit**.

NOTE: The digits being input will display as asterisks (*).

Disabling the Password Function

1. Press **Menu** to open the OSD Menu and go to: **SYSTEM** > **Security Settings** > **Power On Lock**.
2. Press ◀/▶ to select **Off**.
3. The message, "Input Password" will appear. Enter the current password.
   - » If the password is correct, the OSD Menu returns to the Password page with "Off" shown in the row of **Power On Lock**.
   - » If the password is incorrect, a password error message will appear for 5 seconds followed by the message, 'INPUT CURRENT PASSWORD'. You can try again or press **Exit** to cancel.

NOTE: Please keep the old password, as you will need it to reactivate the password function.

Forgetting the Password

If the password function is activated, you will be asked to enter the six-digit password every time you turn on the projector. If you enter the wrong password, the password error message, as pictured to the right, will appear for 5 seconds, and the message 'INPUT PASSWORD' follows.

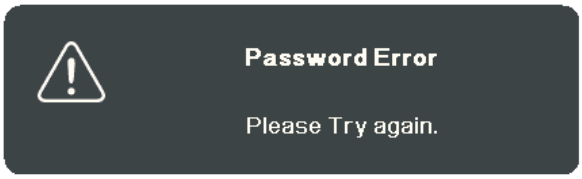

You can retry or if you do not remember, you can use the "Password Recall Procedure".

NOTE: If you enter an incorrect password 5 times in succession, the projector will automatically shut down for a short time.

Password Recall Procedure

1. When the message 'INPUT CURRENT PASSWORD' appears, press and hold **Auto Sync** for 3 seconds. The projector will display a coded number on the screen.
2. Write down the number and turn off your projector.
3. Seek help from the local service center to decode the number. You may be required to provide proof of purchase documentation to verify that you are an authorized user of the projector.

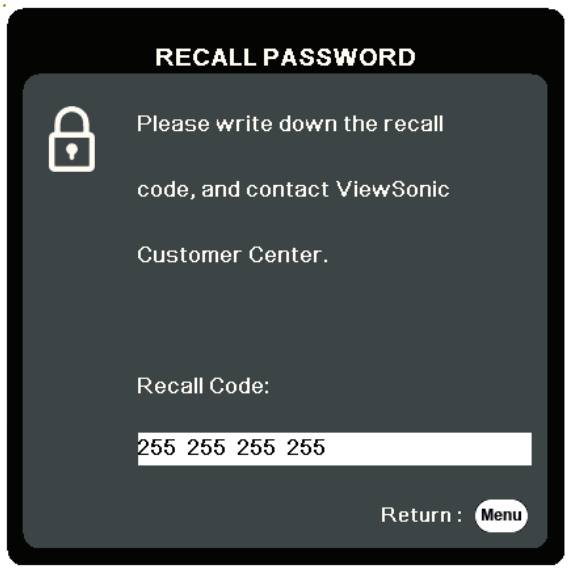

Locking the Control Keys

With the control keys on the projector locked, you can prevent your settings from being changed accidentally (by children, for example).

NOTE: When the **Panel Key Lock** is On, no control keys on the projector will operate except **Power**.

1. Press **Menu** to open the OSD Menu and go to: **SYSTEM** > **Panel Key Lock**.
2. Press ▲/▼ to select **On**.
3. Select **Yes** and press **Enter** to confirm.
4. To release panel key lock, press and hold ▶ on the projector for 3 seconds.

NOTE: You can also use the remote control to enter the **SYSTEM** > **Panel Key Lock** menu and select **Off**.

Making Connections

This section guides you on how to connect the projector with other equipment.

Connecting to Power

1. Connect the power cord to the AC IN jack at the rear of the projector.
2. Plug the power cord into a power outlet.

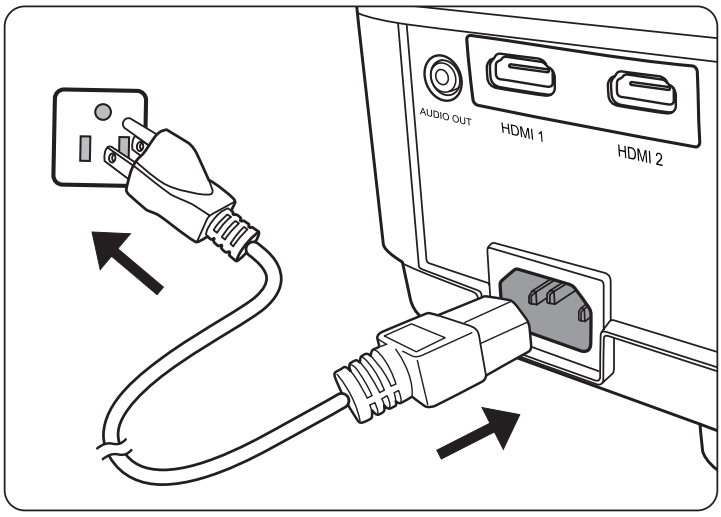

NOTE: When installing the projector, incorporate a readily accessible disconnect device in the fixed wiring, or connect the power plug to an easily accessible outlet near the unit. If a fault should occur during operation of the projector, use the disconnect device to switch off the power supply, or disconnect the power plug.

Connecting to Video/Computer Sources

HDMI Connection

Connect one end of an HDMI cable to the HDMI port of your video device. Then connect the other end of the cable to the **HDMI 1** or **HDMI 2** port of your projector.

Connecting to Audio

The projector is equipped with speakers, however, you can also connect external speakers to the **AUDIO OUT** port of the projector.

NOTE: The audio output is controlled by the projector's **Volume** and **Mute** settings.

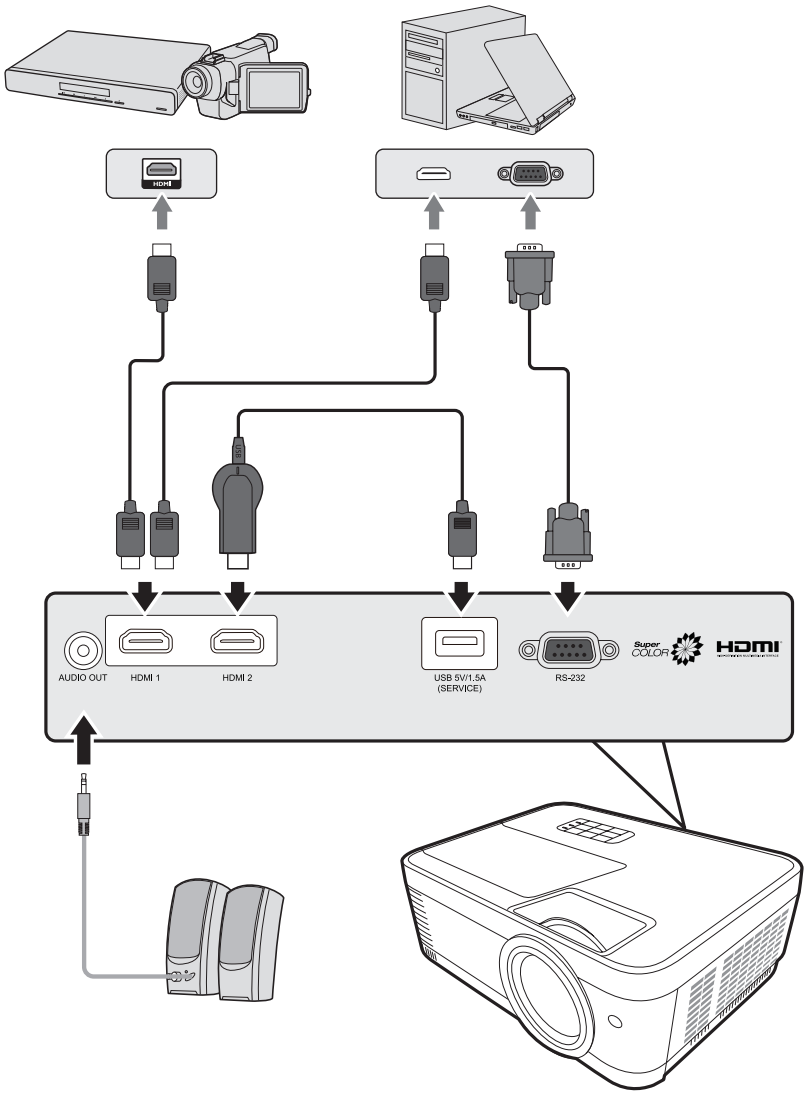

HDMI®
HIGH-DEFINITION MULTIMEDIA INTERFACE

Operation

Turning the Projector On/Off

Starting Up the Projector

1. Press the **Power** button to turn on the projector.

2. The lamp will light up, and a **"Power On/Off Ring Tone"** will play.

3. The Power Indicator Light stays green when the projector is On.

NOTE:

- If the projector is still hot from previous use, it will run the cooling fan for 90 seconds before activating the lamp.
- To maintain lamp life, once you turn the projector On, wait at least five (5) minutes before turning it off.

4. Turn on all of the connected equipment, i.e. notebook, and the projector will start to search for an input source.

NOTE: If the projector detects an input source, the Source Selection Bar will appear. If an input source is not detected, the message, 'No Signal' will appear.

First Time Activation

If the projector is activated for the first time, select your OSD language following the on-screen instructions.

Shutting Down the Projector

1. Press the **Power** or **Off** button and a confirmation message will appear to prompt you to press the **Power** or **Off** button a second time. Additionally you can press any other button to cancel.

   NOTE: If you do not respond in a few seconds after the first press, the message will disappear.

2. Once the cooling process finishes, a **"Power On/Off Ring Tone"** will play.
3. Disconnect the power cord from the power outlet if the projector will not be used for an extended period of time.

NOTE:

- To protect the lamp, the projector will not respond to commands during the cooling process.
- Do not unplug the power cord before the projector completely shuts down.

Selecting an Input Source

The projector can be connected to multiple devices at the same time. However, it can only display one full screen at a time.

If you want the projector to automatically search for the input source, ensure the **Quick Auto Search** function in the **SYSTEM** menu is **On**.

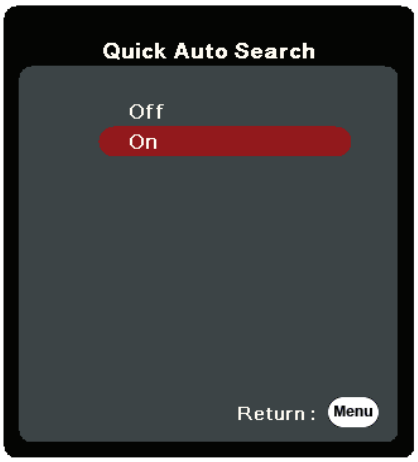

The **Input Source** can also be manually selected by pressing one of the source selection buttons on the remote control, or by cycling through the available input sources.

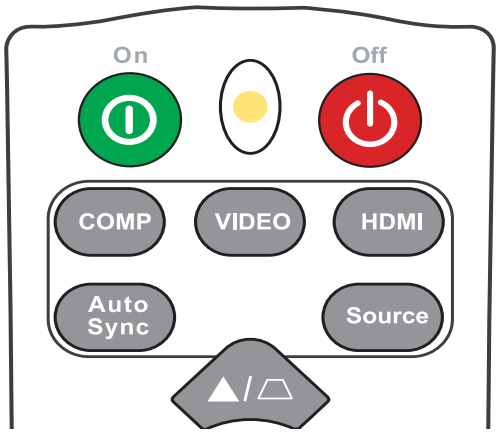

To manually select the input source do the following:

1. Press **Source**, and a source selection menu will appear.
2. Press ▲/▼ until your desired signal is selected and press **Enter**.
3. Once detected, the selected source information will be displayed on the screen for a few seconds.

   NOTE: If there are multiple devices connected to the projector, repeat steps 1-2 to search for another source.

Adjusting the Projected Image

Adjusting the Projector's Height and Projection Angle

The projector is equipped with one (1) adjuster foot. Adjusting the foot will change the projector’s height and the vertical projection angle. Carefully adjust the feet to fine tune the projected image’s position.

Fine-Tuning the Image Size and Clarity

To adjust the projected image to the size that you need, rotate the Zoom Ring.

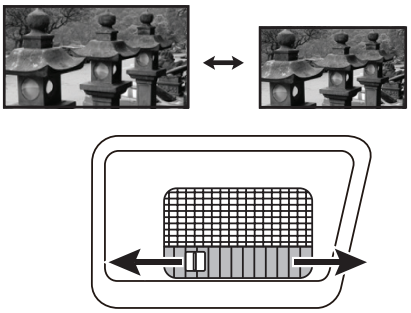

To improve the clarity of the image, rotate the Focus Ring.

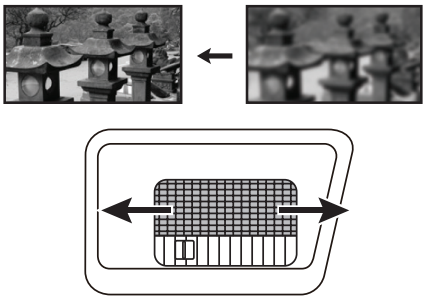

Correcting Keystone

Keystoning refers to the situation where the projected image becomes a trapezoid due to angled projection.

To correct this, besides adjusting the height of the projector, you may also:

1. Use the keystone keys on the projector or remote control to display the keystone page.
2. After the keystone page is displayed, press ▽ to correct keystoning at the top of the image. Press △ to correct keystoning at the bottom of the image.

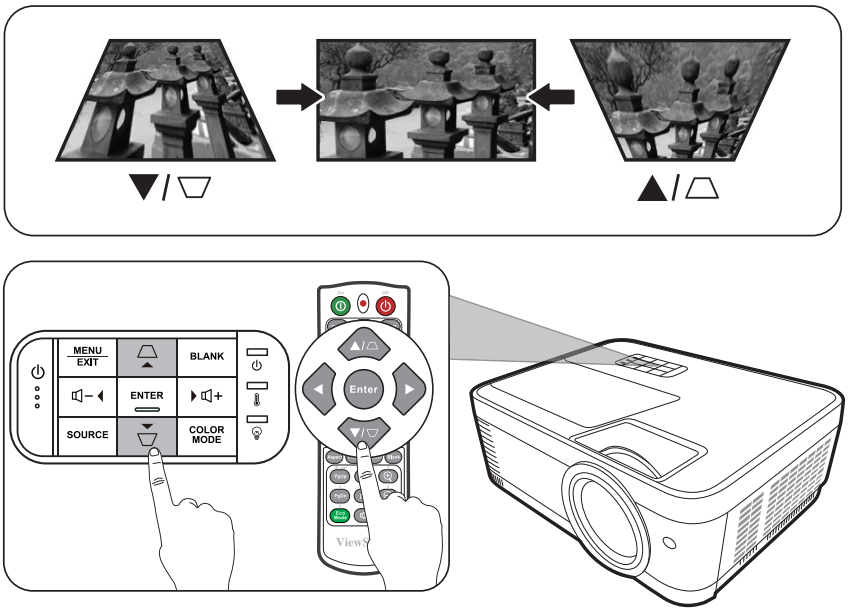

Hiding the Image

In order to draw the audience's full attention to the presenter, you can press **Blank** on the projector or remote control to hide the screen image. Press any key on the projector or remote control to restore the image.

CAUTION: Do not block the projection lens as this could cause the blocking object to become heated and deformed or even cause a fire.

Menu Functions

This section will introduce the On-Screen Display (OSD) Menu and its options.

General On-Screen Display (OSD) Menu Operation

The projector is equipped with an On-Screen Display (OSD) Menu for making various adjustments. It can be accessed by pressing **Menu** on the projector or remote control.

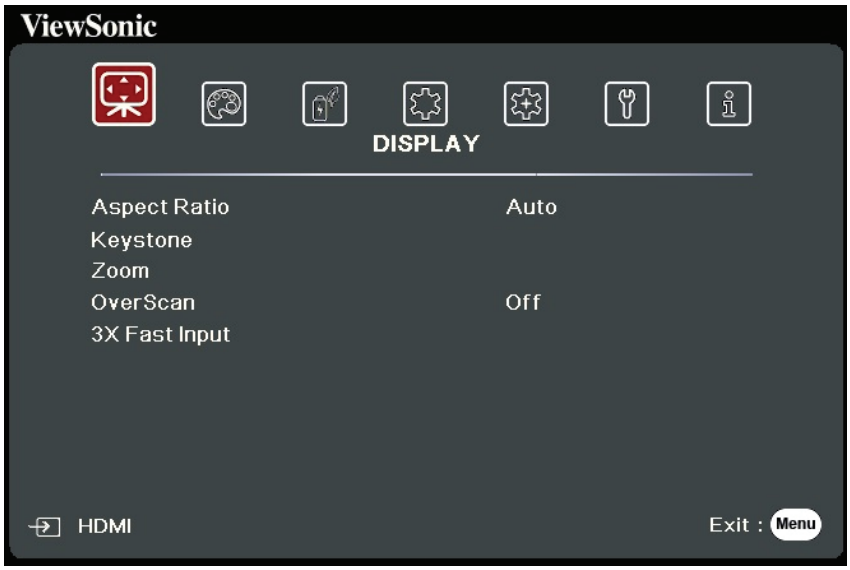

1. Press ◀/▶ to select a main menu. Then press **Enter** or use ▲/▼ to access the sub-menu list.
2. Press ▲/▼ to select the menu option. Then press **Enter** to display its sub-menu, or press ◀/▶ to adjust/select the setting.

   NOTE: Some sub-menu options may have another sub-menu. To enter the respective sub-menu, press **Enter**. Use ▲/▼ or ◀/▶ to adjust/select the setting.

On-Screen Display (OSD) Menu Tree

Main Menu	Sub-menu	Menu Option	
DISPLAY	Aspect Ratio	Auto	
		4:3	
		16:9	
		16:10	
		Native	
	Keystone	-40~40	
	Zoom	0.8X ~2.0X	
	OverScan	Off/1/2/3/4/5	
	3X Fast Input	Inactive	
		Active	
IMAGE	Color Mode	Brightest	
		Sports	
		Standard	
		Gaming	
		Movie	
		User 1	
		User 2	
	Brightness	0~100	
	Contrast	-50~50	
	Color Temp.	8000K/6500K/5500K	
		Red Gain	0~100
		Green Gain	0~100
		Blue Gain	0~100
		Red Offset	-50~+50
		Green Offset	-50~+50
		Blue Offset	-50~+50

Main Menu	Sub-menu	Menu Option	
IMAGE	Advanced	Color	-50~50
		Sharpness	0~31
		Gamma	1.8/2.0/2.2/2.35/ 2.5/Cubic/sRGB
		Brilliantcolor	Off/1/2/3/4/ 5/6/7/8/9/10
		Color Management	Primary Color
			Hue
			Saturation
			Gain
	Reset Color Settings	Reset	
		Cancel	
POWER MANAGEMENT	Auto Power On	Signal	Disable/HDMI
		CEC	Disable/Enable
		Direct Power On	Disable/Enable
	Smart Energy	Auto Power Off	Disable/10 min/20 min/30 min
		Sleep Timer	Disable/30 min/1 hr/2hr/3 hr/4 hr/ 8 hr/12 hr
		Power Saving	Disable/Enable
	Quick Power Off	Disable	
		Enable	
	USB A Power	On	
		Off	

Main Menu	Sub-menu	Menu Option	
BASIC	Audio Settings	Mute	Off/On
		Audio Volume	0~20
		Power On/Off Ring Tone	Off/On
	Presentation Timer	Timer Period	1~240 m
		Timer Display	Always/1 min/2 min/3 min/Never
		Timer Position	Top-Left/Bottom-Left/ Top-Right/Bottom-Right
		Timer Counting Direction	Count Down/Count Up
		Sound Reminder	Off/On
		Start Counting/Off	
	Pattern	Off	
		Test Card	
	Blank Timer	Disable/5 min/10 min/15 min/20 min/25 min/30 min	
	Message	Off	
		On	
	Splash Screen	Black	
		Blue	
		ViewSonic	
ADVANCED	3D Settings	3D Sync	Auto
			Off
			Frame Sequential
			Frame Packing
			Top-Bottom
			Side-by-Side
		3D Sync Invert	Disable/Invert
		Save 3D Settings	Yes/No
	HDMI Settings	HDMI Format	Auto/RGB/YUV
		HDMI Range	Auto/Enhanced/Normal

Main Menu	Sub-menu	Menu Option	
ADVANCED	Light Source Settings	Light Source Mode	Normal/Eco/ Dynamic Eco/ SuperEco+
		Reset Light Source Hours	Reset/Cancel
		Light Source Information	Lamp Usage Time
			Normal
			Eco
			Dynamic Eco
			SuperEco+
			Equivalent Lamp Hour
	Reset Settings	Reset	
		Cancel	
SYSTEM	Language	Multi-Language OSD Selection	
	Projector Position	Front Table	
		Rear Table	
		Rear Ceiling	
		Front Ceiling	
	Menu Settings	Menu Display Time	5 sec/10 sec/15 sec/20 sec/25 sec/30 sec
		Menu Position	Center/Top-Left/ Top-Right/ Bottom-Left/ Bottom-Right
	High Altitude Mode	Off	
		On	
	Quick Auto Search	Off	
		On	
	Security Settings	Change Password	
		Power On Lock	Off/On

Main Menu	Sub-menu	Menu Option	
SYSTEM	Panel Key Lock	Off	
		On	
	Remote Control Code	1/2/3/4/5/6/7/8	
	Control Method	RS-232	
		USB	
	Baud Rate	2400/4800/9600/14400/19200/38400/57600/115200	
INFORMATION	Source		
	Color Mode		
	Resolution		
	Color System		
	Firmware Version		
	3X Fast Input		
	S/N		

DISPLAY Menu

1. Press the **Menu** button to display the On-Screen Display (OSD) Menu.
2. Press ◀/▶ to select the **DISPLAY** menu. Then press **Enter** or use ▲/▼ to access the **DISPLAY** menu.

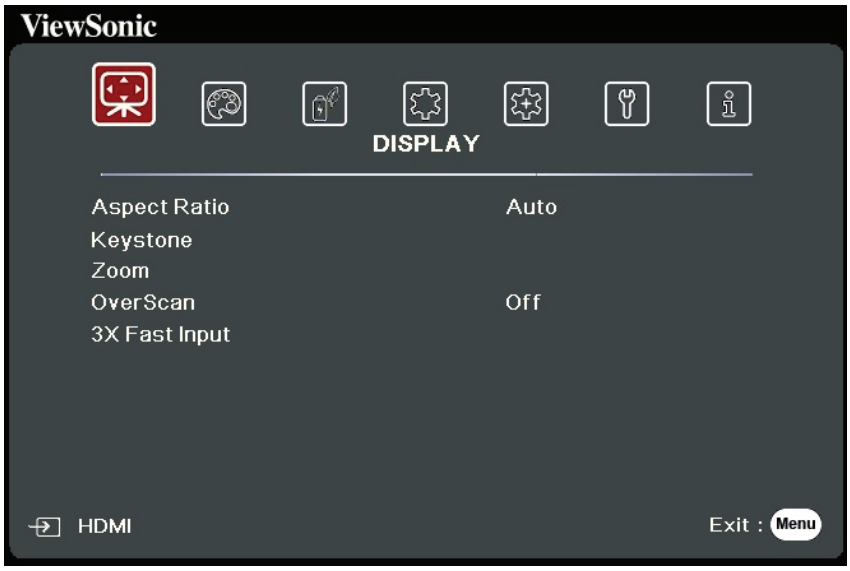

3. Press ▲/▼ to select the menu option. Then press **Enter** to display its sub-menu, or press ◀/▶ to adjust/select the setting.

   NOTE: Some sub-menu options may have another sub-menu. To enter the respective sub-menu, press **Enter**. Use ▲/▼ or ◀/▶ to adjust/select the setting.

Menu Option	Description
Aspect Ratio	<u>Auto</u> Scales an image proportionally to fit the projector's native resolution in its horizontal width. This is suitable for the incoming image which is neither in 4:3 nor 16:9 and you want to make most use of the screen without altering the image's aspect ratio. <u>4:3</u> Scales an image so that it is displayed in the center of the screen with a 4:3 aspect ratio. This is most suitable for 4:3 images like computer monitors, standard definition TV, and 4:3 aspect DVD movies, as it displays them without aspect alteration. <u>16:9</u> Scales an image so that it is displayed in the center of the screen with a 16:9 aspect ratio. This is most suitable for images which are already in a 16:9 aspect, like high definition TV, as it displays them without aspect alteration. <u>16:10</u> Scales an image so that it is displayed in the center of the screen with a 16:10 aspect ratio. This is most suitable for images which are already in a 16:10 aspect, as it displays them without aspect alteration. <u>Native</u> Projects an image as its original resolution and resizes it to fit within the display area. For input signals with lower resolutions, the projected image will be displayed in its original size.
Keystone	Adjusts the keystoning situation where the projected image becomes a trapezoid due to angled projection.
Zoom	Magnifies the projected image and allows you to navigate the image.
OverScan	Adjusts the overscan rate from 0% to 5%. **NOTE:** This function is only available when a Composite Video or HDMI input signal is selected.
3X Fast Input	This function is favorable to frame rate reducing. Quick response time in native timing can be achieved. When enabled, the following settings will return to factory preset values: Aspect Ratio, Zoom, OverScan. **NOTE:** This function is only available when a native timing input signal is selected.

IMAGE Menu

1. Press the **Menu** button to display the On-Screen Display (OSD) Menu.
2. Press ◀/▶ to select the **IMAGE** menu. Then press **Enter** or use ▲/▼ to access the **IMAGE** menu.

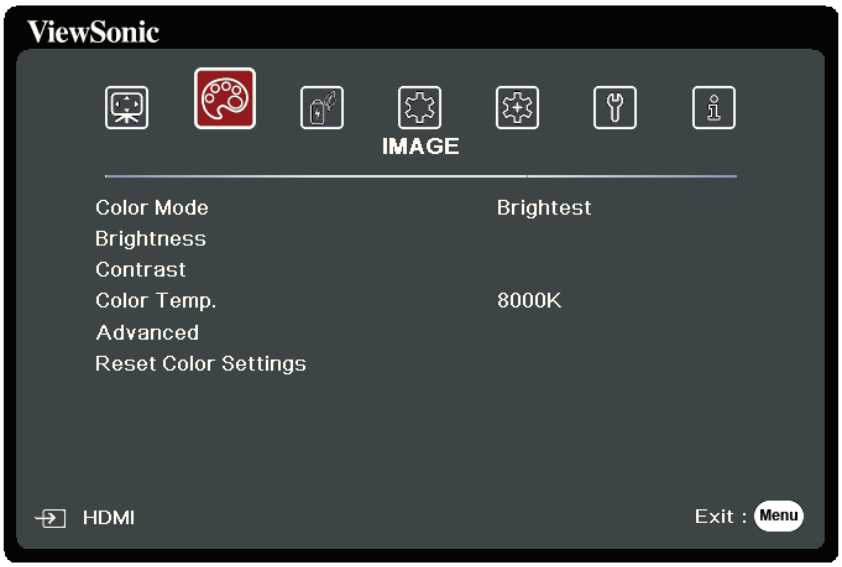

3. Press ▲/▼ to select the menu option. Then press **Enter** to display its sub-menu, or press ◀/▶ to adjust/select the setting.

   NOTE: Some sub-menu options may have another sub-menu. To enter the respective sub-menu, press **Enter**. Use ▲/▼ or ◀/▶ to adjust/select the setting.

Menu Option	Description
Color Mode	<u>Brightest</u> Maximizes the brightness of the projected image. This mode is suitable for environments where extra-high brightness is required, such as using the projector in well lit rooms. <u>Sports</u> Designed for viewing sports in well-lit environments. <u>Standard</u> Designed for normal circumstances in a daylight environment. <u>Gaming</u> Suitable for playing video games in a bright living room. <u>Movie</u> For playing colorful movies, video clips from digital cameras or DVs through the PC input for best viewing in a blackened (little light) environment. <u>User 1/User 2</u> Recalls the customized settings. After User 1/User 2 is selected, some of the sub-menus under the **IMAGE** menu can be adjusted, according to your selected input source.
Brightness	The higher the value, the brighter the image. Adjust this option so the black areas of the image appear just as black and details in the dark area are more visible.
Contrast	Use this to set the peak white level after you have previously adjusted the **Brightness** setting.

Menu Option	Description
Color Temp.	8000K Images appear bluish white. 6500K Images maintain a normal white appearance. 5500K Images appear reddish white. To set a custom color temperature, you can further adjust the following items: Red Gain/Green Gain/Blue Gain Adjusts the Contrast levels of Red, Green, and Blue. Red Offset/Green Offset/Blue Offset Adjusts the Brightness levels of Red, Green, and Blue.
Advanced	Color A lower setting produces less saturated colors. If the setting is too high, colors will be overpowering and may appear unrealistic. Sharpness A higher value will sharpen the image, while a lower value will soften the image. Gamma Gamma refers to the brightness level of the projector's grayscale levels. Brilliantcolor This feature utilizes a new color-processing algorithm and system level enhancements to enable higher brightness while providing truer, more vibrant colors in the projected picture. It enables a greater than 50% brightness increase in mid-tone images, which are common in video and natural scenes, so the projector reproduces images in realistic and true colors. If you prefer images with that quality, select a level that suits your need.
Advanced	Color Management Only in permanent installations with controlled lighting levels such as boardrooms, lecture theaters, or home theaters, should color management be considered. Color management provides fine color control adjustment to allow for more accurate color reproduction. Select Primary Color first and adjust its range/values in Hue, Saturation and Gain.
Reset Color Settings	Returns current image settings to the factory preset values.

POWER MANAGEMENT Menu

1. Press the **Menu** button to display the On-Screen Display (OSD) Menu.

2. Press ◀/▶ to select the **POWER MANAGEMENT** menu. Then press **Enter** or use ▲/▼ to access the **POWER MANAGEMENT** menu.

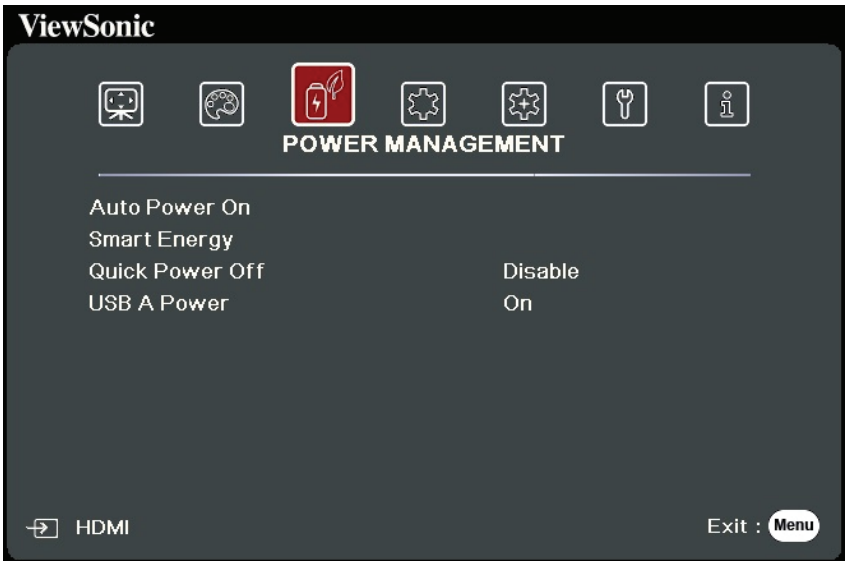

3. Press ▲/▼ to select the menu option. Then press **Enter** to display its sub-menu, or press ◀/▶ to adjust/select the setting.

NOTE: Some sub-menu options may have another sub-menu. To enter the respective sub-menu, press **Enter**. Use ▲/▼ or ◀/▶ to adjust/select the setting.

Menu Option	Description
Auto Power On	<u>Signal</u> Selecting HDMI allows the projector to turn on automatically once the HDMI signal is fed through the HDMI cable. <u>CEC</u> This projector supports CEC (Consumer Electronics Control) function for synchronized power on/off operation via HDMI connection. That is, if a device that also supports CEC function is connected to the HDMI input of the projector, when the projector's power is turned off, the power of the connected device will also be turned off automatically. When the power of the connected device is turned on, the projector's power will be turned on automatically. **NOTE:** • In order for the CEC function to work properly, make sure that the device is correctly connected to the HDMI input of the projector via an HDMI cable, and its CEC function is turned on. • Depending on the connected device, the CEC function may not work. <u>Direct Power On</u> Allows the projector to turn on automatically once power is fed through the power cord.
Smart Energy	<u>Auto Power Off</u> Allows the projector to turn off automatically after a set period of time once no input source is detected to prevent unnecessary waste of lamp life. **NOTE:** Disabling Auto Power Off will increase energy consumption. <u>Sleep Timer</u> Allows the projector to turn off automatically after a set period of time to prevent unnecessary waste of lamp life. <u>Power Saving</u> Lowers power consumption if no input source is detected. When Enable is selected, the projector lamp mode will change to SuperEco+ mode after no signal is detected for five (5) minutes. This will also help prevent any unnecessary waste of lamp life.

Menu Option	Description
Quick Power Off	Enable The projector will not enter the cooling process after being shut down. Disable The projector will enter the normal cooling process after being shut down. **NOTE:** If you attempt to restart the projector right after it's been turned off, it may not be turned on successfully and will rerun its cooling procedure.
USB A Power	When On, the USB Type A port can supply power, and the Control Method will automatically switch to RS-232.

BASIC Menu

1. Press the **Menu** button to display the On-Screen Display (OSD) Menu.
2. Press ◀/▶ to select the **BASIC** menu. Then press **Enter** or use ▲/▼ to access the **BASIC** menu.

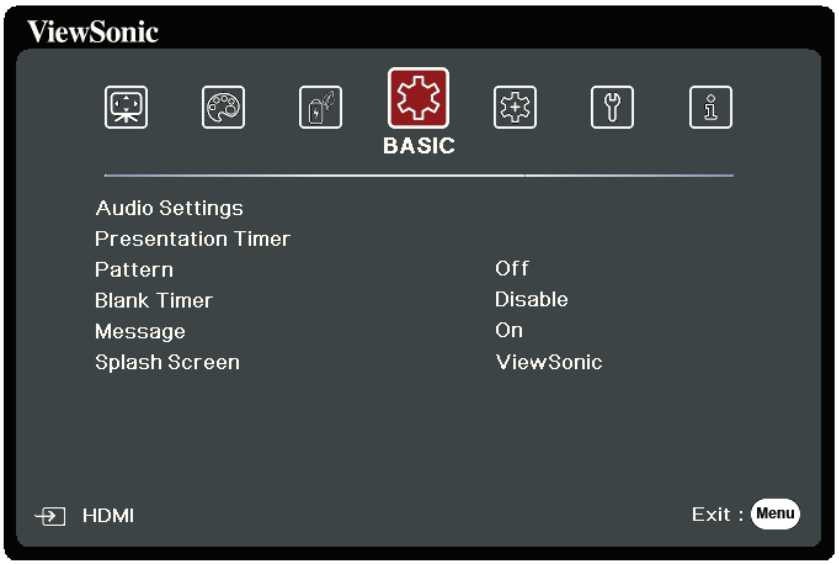

3. Press ▲/▼ to select the menu option. Then press **Enter** to display its sub-menu, or press ◀/▶ to adjust/select the setting.

   NOTE: Some sub-menu options may have another sub-menu. To enter the respective sub-menu, press **Enter**. Use ▲/▼ or ◀/▶ to adjust/select the setting.

Menu Option	Description
Audio Settings	Mute Select On to temporarily turn off the projector's internal speaker or the volume being output from the audio output jack. Audio Volume Adjusts the volume level of the projector's internal speaker or the volume being output from the audio output jack. Power On/Off Ring Tone Turns on/off the ring tone during the starting up and shutting down process.
Presentation Timer	Presentation timer can indicate the presentation time on the screen to help you achieve better time management when giving presentations. Timer Period Sets the time period. If the timer is already on, the timer will restart whenever the Timer Period is reset. Timer Display Allows you to decide if you want the timer to show up on the screen for one of the following time periods: » Always: Displays the timer on screen throughout the presentation time. » 1 min/2 min/3 min: Displays the timer on screen in the last 1/2/3 minute(s). » Never: Hides the timer throughout the presentation time. Timer Position Sets the timer position. Timer Counting Direction Sets your desired counting direction between: » Count Down: Decreases from the preset time to 0. » Count Up: Increases from 0 to the preset time. Sound Reminder Allows you to decide if you want to activate a sound reminder. Once enabled, a double beep sound will be heard at the last 30 seconds of counting down/up, and a triple beep sound will be produced when the timer is up. Start Counting/Off Select Start Counting to activate the timer. Select Off to cancel it.
Pattern	Helps adjust the image size and focus, and checks for distortion in the projected image.

Menu Option	Description
Blank Timer	Allows the projector to return the image automatically after a period of time when there is no action taken on the blank screen. To display the blank screen, press **Blank** on the projector or remote control. **NOTE:** Do not block the projection lens as this could cause the blocking object to become heated and deformed or even cause a fire.
Message	Sets reminder messages, i.e. “Blank” message, On or Off.
Splash Screen	Selects which logo screen will appear during projector start-up.

ADVANCED Menu

1. Press the **Menu** button to display the On-Screen Display (OSD) Menu.
2. Press ◀/▶ to select the **ADVANCED** menu. Then press **Enter** or use ▲/▼ to access the **ADVANCED** menu.

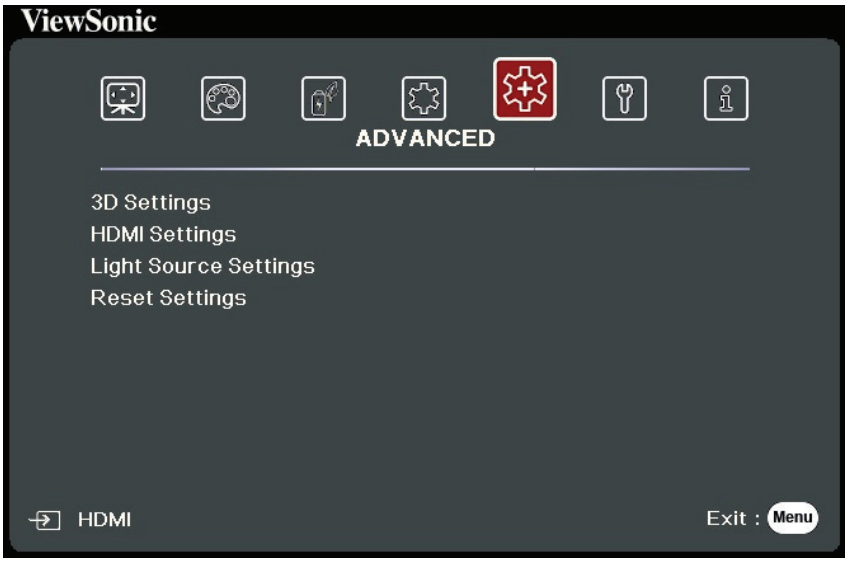

3. Press ▲/▼ to select the menu option. Then press **Enter** to display its sub-menu, or press ◀/▶ to adjust/select the setting.

   NOTE: Some sub-menu options may have another sub-menu. To enter the respective sub-menu, press **Enter**. Use ▲/▼ or ◀/▶ to adjust/select the setting.

Menu Option	Description
3D Settings	This projector features a 3D function which enables you to enjoy 3D movies, videos, and sporting events in a more realistic way by presenting the depth of the images. You need to wear a pair of 3D glasses to view 3D images. <u>3D Sync</u> The default setting is Auto and the projector automatically chooses an appropriate 3D format when detecting 3D contents. If the projector cannot recognize the 3D format, choose a 3D mode. <u>3D Sync Invert</u> When you discover the inversion of the image depth, enable this function to correct the problem. <u>Save 3D Settings</u> Saves current 3D settings. 3D settings will automatically be applied if the same resolution and input source are selected. **NOTE:** When the 3D Sync function is on: • The brightness level of the projected image will decrease. • The Color Mode, Light Source Mode, Zoom, and OverScan cannot be adjusted.
HDMI Settings	<u>HDMI Format</u> Select a suitable color space according to the color space setting of the output device connected. » Auto: Sets the projector to detect the color space setting of the input signal automatically. » RGB: Sets the color space as RGB. » YUV: Sets the color space as YUV. <u>HDMI Range</u> Select a suitable HDMI color range according to the color range setting of the output device connected. » Auto: Sets the projector to detect the HDMI range of the input signal automatically. » Enhanced: Sets the HDMI color range as 0 - 255. » Normal: Sets the HDMI color range as 16 - 235.

Menu Option	Description
Light Source Settings	<u>Light Source Mode</u> » Normal: Provides full lamp brightness. » Eco: Reduces lamp power consumption by 16% and lowers brightness to extend the lamp life and decreases the fan noise. » Dynamic Eco: Reduces lamp power consumption by up to 30% depending on the content brightness level. » SuperEco+: Reduces lamp power consumption by 60% and lowers brightness to extend the lamp life and decreases the fan noise. **NOTE:** To control the lamp temperature, Eco Mode will be switched on for 10 minutes in every 4 hours when the Light Source Mode is set as SuperEco+. <u>Reset Light Source Hours</u> Resets the lamp timer after new lamp is installed. For changing the lamp, please contact qualified service personnel. When the **Lamp Indicator Light** lights up, please install a new lamp or consult your dealer. **CAUTION:** An old lamp may cause a malfunction in the projector and in some instances the lamp may explode. **NOTE:** It is recommended to turn the power off and disconnect the projector from the power outlet, and contact a qualified service personnel for lamp replacement. <u>Light Source Information</u> » Lamp Usage Time: Displays the number of hours the lamp has been used. » Equivalent Lamp Hour: Displays the overall lamp life. The method of calculating the equivalent light source hour is as follows: Total (equivalent) Lamp Hour = 3.33 x (hours used in Normal mode) + 2 x (hours used in Eco mode) + 2 x (hours used in Dynamic Eco mode) + 1 x (hours used in SuperEco+ mode)
Reset Settings	Returns all settings to the factory preset values. When using Reset Settings, the following settings will still remain: Zoom, Keystone, Language, Projector Position, High Altitude Mode, Security Settings, Remote Control Code, and Baud Rate.

SYSTEM Menu

1. Press the **Menu** button to display the On-Screen Display (OSD) Menu.
2. Press ◀/▶ to select the **SYSTEM** menu. Then press **Enter** or use ▲/▼ to access the **SYSTEM** menu.

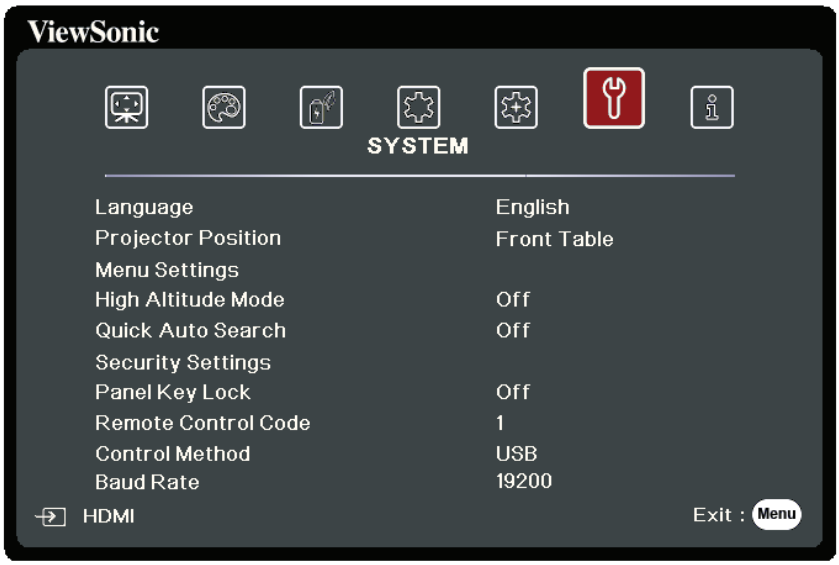

3. Press ▲/▼ to select the menu option. Then press **Enter** to display its sub-menu, or press ◀/▶ to adjust/select the setting.

   NOTE: Some sub-menu options may have another sub-menu. To enter the respective sub-menu, press **Enter**. Use ▲/▼ or ◀/▶ to adjust/select the setting.

Menu Option	Description
Language	Sets the language for the On-Screen Display (OSD) Menu.
Projector Position	Selects a proper position for the projector.
Menu Settings	Menu Display Time Sets the length of time the OSD Menu will remain active after your last interaction. Menu Position Sets the OSD Menu's position.
High Altitude Mode	We recommend you use the High Altitude Mode when your environment is between 1,500 m to 3,000 m above sea level, and ambient temperature is between 5°C–25°C. **NOTE:** • Do not use High Altitude Mode if your environment is between 0 to 1,499 m, and the temperature is between 5°C to 35°C. If used, the projector will become over cooled. • Using "High Altitude Mode" may cause more operating noise, as the fan speed will be increased to improve cooling and performance.
Quick Auto Search	Allows the projector to automatically search for the signals.
Security Settings	See "Using the Password Function" on page 19.
Panel Key Lock	Locks the control keys on the projector.
Remote Control Code	Sets the remote control code for this projector (between 1~8). When multiple adjacent projectors are in operation at the same time, switching the codes can prevent interference from other remote controls. After the remote control code is set, switch to the same ID for the remote control to control this projector.
Control Method	Allows you to select a preferred control port: through the RS-232 port or the USB port. When selecting USB, USB A Power will be switched to Off automatically.
Baud Rate	Selects a baud rate that is identical with your computer's so that you can connect the projector using a suitable RS-232 cable and control the projector with RS-232 commands

INFORMATION Menu

1. Press the **Menu** button to display the On-Screen Display (OSD) Menu.

2. Press ◀ / ▶ to select the **INFORMATION** menu and display its contents.

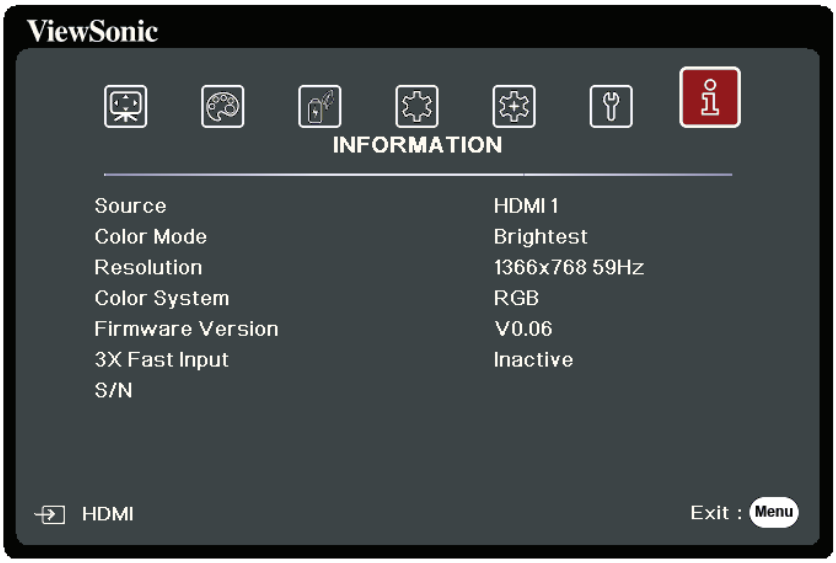

Menu Option	Description
Source	Shows the current input source.
Color Mode	Shows the selected mode in the IMAGE menu.
Resolution	Shows the native resolution of the input source.
Color System	Shows input system format.
Firmware Version	Shows the current firmware version.
3X Fast Input	Shows whether the function is activated or not.
S/N	Shows the serial number for this projector.

Appendix

Specifications

Item	Category	Specifications
Projector	Type	DLP Lamp 0.65” 1080p
	Display Size	70” ~ 150”
	Throw Ratio	1.49~1.64 (95”±3%@3.1m)
	Lens	1.1x±2% Optical Zoom
	Lamp Type	UHP 203-170W 0.8 E20.7i Fusion Air
	Display System	1-CHIP DMD
Input Signal	HDMI	f_h: 15K~102KHz, f_v:23~120Hz, Pixel rate: 170MHz
Resolution	Native	1920 x 1080
Power Adapter[1]	Input Voltage	AC 100-240V, 50/60 Hz (auto switch)
Operating conditions	Temperature	0°C to 40°C (32°F to 104°F)
	Humidity	0% to 90% (non-condensing)
	Altitude	0 to 1,499 m at 5°C to 35°C 1,500 to 3,000 m at 5°C to 25°C
Storage conditions	Temperature	-20°C to 60°C (non-condensing)
	Humidity	0% to 90% (non-condensing)
	Altitude	0 to 1,219 m at -20°C to 30°C
Dimensions	Physical (W x H x D)	293 x 115 x 221 mm (11.5” x 4.5” x 8.7”)
Weight	Physical	2.4 kg (5.29 lbs)
Power Saving Modes	On[2]	260 W (Typical)
	Off	< 0.5 W (Standby)

[1] Please use the power adapter from ViewSonic® or an authorized source only.
[2] The test condition follows EEI standards.

Projector Dimensions

293 mm (W) x 115 mm (H) x 221 mm (D)

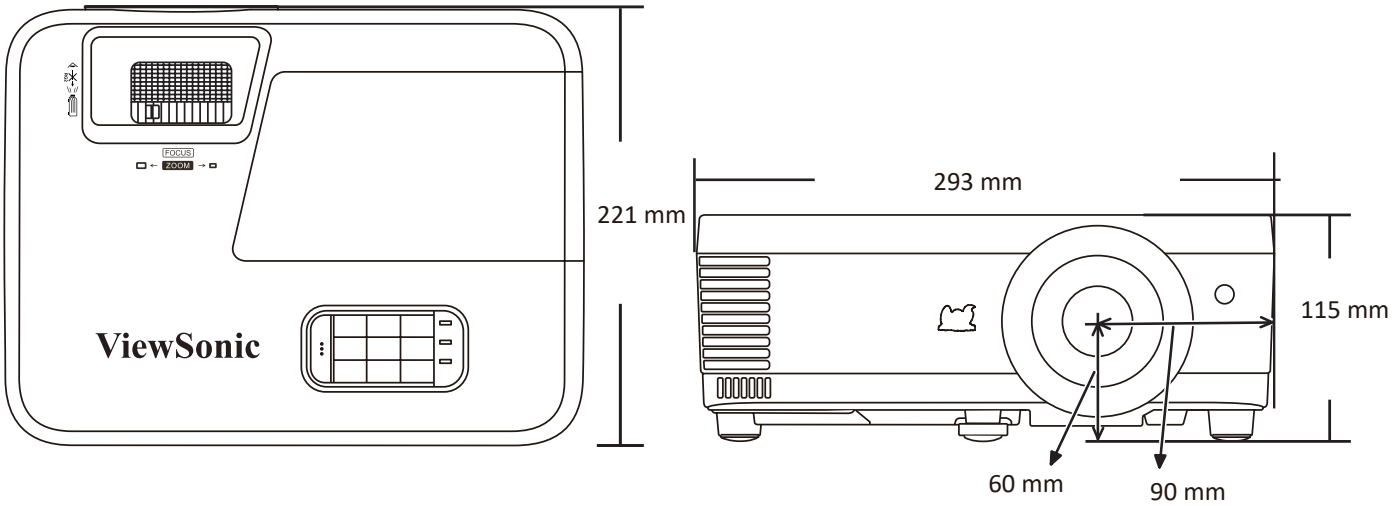

Timing Chart

HDMI (PC)			
Signal	**Resolution (dots)**	**Aspect ratio**	**Refresh rate (Hz)**
VGA	640 x 480	4:3	60/72/75
720 x 400	720 x 400	9:5	70
SVGA	800 x 600	4:3	56/60/72/75/120
XGA	1024 x 768	4:3	60/70/75/120
	1152 x 864	4:3	75
HD	1280x 720	16:9	60/120
WXGA	1366 x 768	16:9	59.7
	1280 x 800	16:10	60/120
Quad-VGA	1280 x 960	4:3	60
SXGA	1280 x 1024	5:4	60/75
WXGA+	1440 x 900	16:10	60
UXGA	1600 x 1200	4:3	60
WSXGA+	1680 x 1050	16:10	60
MAC 13"	640 x 480	4:3	67
MAC 16"	832 x 624	4:3	75
MAC 21"	1152 x 870	4:3	75
HDTV (1080p)	1920 x 1080	16:9	60

HDMI (Video)				
Timing	Resolution	Horizontal Frequency (kHz)	Vertical frequency (Hz)	Dot Clock Frequency (MHz)
480i	720(1440) x 480	15.73	59.94	27
480p	720 x 480	31.47	59.94	27
576i	720(1440) x 576	15.63	50	27
576p	720 x 576	31.25	50	27
720/50p	1280 x 720	37.5	50	74.25
720/60p	1280 x 720	45	60	74.25
1080/50i	1920 x 1080	28.13	50	74.25
1080/60i	1920 x 1080	33.75	60	74.25
1080/24P	1920 x 1080	27	24	74.25
1080/50P	1920 x 1080	56.25	50	148.5
1080/60P	1920 x 1080	67.5	60	148.5

HDMI 3D (InfoFrame)		
Timing	Resolution (dots)	Refresh rate (Hz)
In **Frame Packing** format		
1080p	1920 x 1080	23.98/24
720p	1280 x 720	50/59.94/60
In **Side-by-Side** format		
1080i	1920 x 1080	50/60
1080p	1920 x 1080	50/60
In **Top-Bottom** format		
1080p	1920 x 1080	24/50/60
720p	1280 x 720	50/60

3D (HDMI/VGA signal included)		
Timing	**Resolution (dots)**	**Refresh rate (Hz)**
HDTV(1080p)	1920 x 1080	60*
WXGA	1280 x 800	60*/120**
HD(720p)	1280 x 720	60*/120**
XGA	1024 x 768	60*/120**
SVGA	800 x 600	60*/120**
NOTE: *60Hz signals are supported for Side-by-Side, Top-Bottom, and Frame Sequential formats. **NOTE:** **120 Hz signals are supported for Frame Sequential format only.		

IR Control Table

Key	Format	Byte 1	Byte 2	Byte 3	Byte 4
On	NEC-F2	83	F4	4F	B0
Off	NEC-F2	83	F4	4E	B1
COMP	NEC-F2	83	F4	41	BE
VIDEO	NEC-F2	83	F4	52	AD
HDMI	NEC-F2	83	F4	58	A7
Auto Sync	NEC-F2	83	F4	8	F7
Source	NEC-F2	83	F4	40	BF
▲ Up/	NEC-F2	83	F4	0B	F4
◀ Left	NEC-F2	83	F4	0E	F1
Enter	NEC-F2	83	F4	15	EA
▶ Right	NEC-F2	83	F4	0F	F0
▼ Down/	NEC-F2	83	F4	0C	F3
Menu	NEC-F2	83	F4	30	CF
(**INFORMATION**)	NEC-F2	83	F4	97	68
Exit	NEC-F2	83	F4	28	D7
Aspect	NEC-F2	83	F4	13	EC
Freeze	NEC-F2	83	F4	03	FC
Pattern	NEC-F2	83	F4	55	AA
Blank	NEC-F2	83	F4	7	F8
PgUp	NEC-F2	83	F4	06	F9
PgDn	NEC-F2	83	F4	05	FA
(Mute)	NEC-F2	83	F4	14	EB
−(Volume Down)	NEC-F2	83	F4	83	7C
+(Volume Up)	NEC-F2	83	F4	82	7D
(Zoom in)	NEC-F2	83	F4	67	98
(Zoom out)	NEC-F2	83	F4	68	97
Eco Mode	NEC-F2	83	F4	2B	D4
Color Mode	NEC-F2	83	F4	10	EF

Address Code

Code 1	83F4
Code 2	93F4
Code 3	A3F4
Code 4	B3F4
Code 5	C3F4
Code 6	D3F4
Code 7	E3F4
Code 8	F3F4

Troubleshooting

Common Problems

This section describes some common problems that you may experience when using the projector.

Problem	Possible Solutions
The projector does not turn on	• Ensure the power cord is properly attached to the projector and to the power outlet. • If the cooling process has not completed, please wait until it has finished then try to turn on the projector again. • If the above does not work, try another power outlet or another electrical device with the same power outlet.
There is no picture	• Ensure the video source cable is connected properly, and that the video source is turned on. • If the input source is not selected automatically, select the correct source with the **Source** key on either the projector or the remote control.
The image is blurred	• Adjusting the **Focus Ring** will help correctly focus the projection lens. • Ensure the projector and screen are aligned properly. If necessary, adjust the height of the projector as well as the projection angle and direction.
The remote control does not work	• Ensure there are no obstacles between the remote control and projector; and that they are within 8 m (26 ft) of each other. • The batteries may be out of power, please check and replace if necessary.

LED Indicators

Light			Status and Description
⏻	🌡	💡	
Power			
Green Flashing	Off	Off	Stand-by mode
Green	Off	Off	Powering up
Green	Off	Off	Normal operation
Green Flashing	Off	Off	Normal power-down cooling
Red	Off	Off	Downloading
Green	Green	Green	Burn in off
Lamp			
Green Flashing	Off	Red	First light source-lit error cooling
Off	Off	Red	Light source error in normal operation
Green	Off	Red	Color wheel start has failed
Heating/Cooling			
Off	Red	Off	Fan 1 error (actual fan speed is outside the desired speed).
Off	Red	Red	Fan 2 error (actual fan speed is outside the desired speed).
Off	Red	Green	Fan 3 error (actual fan speed is outside the desired speed).
Off	Red	Orange	Fan 4 error (actual fan speed is outside the desired speed).
Red Flashing	Red	Off	Fan 5 error (actual fan speed is outside the desired speed).
Red Flashing	Red Flashing	Off	Fan 6 error (actual fan speed is outside the desired speed).
Red	Red	Red	Thermal sensor 1 open error (the remote diode has an open-circuit condition).
Red	Red	Green	Thermal sensor 2 open error (the remote diode has an open-circuit condition).
Green	Red	Red	Thermal sensor 1 short error (the remote diode has an open-circuit condition).
Off	Red	Green	Thermal sensor 2 short error (the remote diode has an open-circuit condition).
Orange	Red	Red	Temperature 1 error (over limited temperature).
Orange	Red	Green	Temperature 2 error (over limited temperature).
Off	Green	Red	Fan IC #1 I2C connection error.

Maintenance

General Precautions

- Make sure the Projector is turned off and the power cable is unplugged from the power outlet.
- Never remove any parts from the Projector. Contact ViewSonic® or a reseller when any part of the Projector needs replacing.
- Never spray or pour any liquid directly onto the case.
- Handle the Projector with care, as a darker-colored projector, if scuffed, may show marks more clearly than a lighter-colored projector.

Cleaning the Lens

- Use a canister of compressed air to remove dust.
- If the lens is still not clean, use lens-cleaning paper or moisten a soft cloth with lens cleaner and gently wipe the surface.

CAUTION: Never rub the lens with abrasive materials.

Cleaning the Case

- Use a soft, lint-free, dry cloth to remove dirt or dust.
- If the case is still not clean, apply a small amount of non-ammonia, non-alcohol based, mild non-abrasive detergent onto a clean, soft, lint-free cloth, then wipe the surface.

CAUTION: Never use wax, alcohol, benzene, thinner, or other chemical detergents.

Storing the Projector

If you intend to store the Projector for an extended period of time:

- Ensure the temperature and humidity of the storage area are within the recommend range.
- Retract the adjuster foot completely.
- Remove the batteries from the Remote Control.
- Pack the Projector in its original packaging or equivalent.

Disclaimer

- ViewSonic® does not recommend the use of any ammonia or alcohol-based cleaners on the lens or case. Some chemical cleaners have been reported to damage the lens and/or case of the projector.
- ViewSonic® will not be liable for damage resulting from use of any ammonia or alcohol-based cleaners.

Regulatory and Service Information

Compliance Information

This section addresses all connected requirements and statements regarding regulations. Confirmed corresponding applications shall refer to nameplate labels and relevant markings on the unit.

FCC Compliance Statement

This device complies with part 15 of FCC Rules. Operation is subject to the following two conditions: (1) this device may not cause harmful interference, and (2) this device must accept any interference received, including interference that may cause undesired operation. This equipment has been tested and found to comply with the limits for a Class B digital device, pursuant to part 15 of the FCC Rules.

These limits are designed to provide reasonable protection against harmful interference in a residential installation. This equipment generates, uses, and can radiate radio frequency energy, and if not installed and used in accordance with the instructions, may cause harmful interference to radio communications. However, there is no guarantee that interference will not occur in a particular installation. If this equipment does cause harmful interference to radio or television reception, which can be determined by turning the equipment off and on, the user is encouraged to try to correct the interference by one or more of the following measures:

- Reorient or relocate the receiving antenna.
- Increase the separation between the equipment and receiver.
- Connect the equipment into an outlet on a circuit different from that to which the receiver is connected.
- Consult the dealer or an experienced radio/TV technician for help.

Warning: You are cautioned that changes or modifications not expressly approved by the party responsible for compliance could void your authority to operate the equipment.

Industry Canada Statement

This Class B digital apparatus complies with Canadian ICES-003.

Cet appareil numérique de classe B est conforme à la norme NMB-003 du Canada.

CAN ICES(B) / NMB(B)

CE Conformity for European Countries

The device complies with the EMC Directive 2014/30/EU and Low Voltage Directive 2014/35/EU. Ecodesign Directive 2009/125/EC.

The following information is only for EU-member states:

The mark shown to the right is in compliance with the Waste Electrical and Electronic Equipment Directive 2012/19/EU (WEEE). The mark indicates the requirement NOT to dispose of the equipment as unsorted municipal waste, but use the return and collection systems according to local law.

Declaration of RoHS2 Compliance

This product has been designed and manufactured in compliance with Directive 2011/65/EU of the European Parliament and the Council on restriction of the use of certain hazardous substances in electrical and electronic equipment (RoHS2 Directive) and is deemed to comply with the maximum concentration values issued by the European Technical Adaptation Committee (TAC) as shown below:

Substance	Proposed Maximum Concentration	Actual Concentration
Lead (Pb)	0.1%	< 0.1%
Mercury (Hg)	0.1%	< 0.1%
Cadmium (Cd)	0.01%	< 0.01%
Hexavalent Chromium ($Cr6^{+}$)	0.1%	< 0.1%
Polybrominated biphenyls (PBB)	0.1%	< 0.1%
Polybrominated diphenyl ethers (PBDE)	0.1%	< 0.1%
Bis (2-ethylhexyl) phthalate (DEHP)	0.1%	< 0.1%
Butyl benzyl phthalate (BBP)	0.1%	< 0.1%
Dibutyl phthalate (DBP)	0.1%	< 0.1%
Diisobutyl phthalate (DIBP)	0.1%	< 0.1%

Certain components of products as stated above are exempted under the Annex III of the RoHS2 Directives as noted below. Examples of exempted components are:

- Copper alloy containing up to 4% lead by weight.
- Lead in high melting temperature type solders (i.e. lead-based alloys containing 85% by weight or more lead).
- Electrical and electronic components containing lead in a glass or ceramic other than dielectric ceramic in capacitors, e.g. piezoelectronic devices, or in a glass or ceramic matrix compound.
- Lead in dielectric ceramic in capacitors for a rated voltage of 125 V AC or 250 V DC or higher.

Indian Restriction of Hazardous Substances

Restriction on Hazardous Substances statement (India). This product complies with the “India E-waste Rule 2011” and prohibits use of lead, mercury, hexavalent chromium, polybrominated biphenyls or polybrominated diphenyl ethers in concentrations exceeding 0.1 weight % and 0.01 weight % for cadmium, except for the exemptions set in Schedule 2 of the Rule.

Product Disposal at End of Product Life

ViewSonic® respects the environment and is committed to working and living green. Thank you for being part of Smarter, Greener Computing. Please visit the ViewSonic® website to learn more.

USA & Canada:

https://www.viewsonic.com/us/go-green-with-viewsonic

Europe:

https://www.viewsonic.com/eu/go-green-with-viewsonic

Taiwan:

https://recycle.moenv.gov.tw/

For EU users, please contact us for any safety/accident issue experienced with this product:

ViewSonic Europe Limited
Haaksbergweg 75
1101 BR Amsterdam
Netherlands

+31 (0) 650608655

EPREL@viewsoniceurope.com

https://www.viewsonic.com/eu/

Copyright Information

Copyright© ViewSonic® Corporation, 2024. All rights reserved.

Macintosh and Power Macintosh are registered trademarks of Apple Inc.

Microsoft, Windows, and the Windows logo are registered trademarks of Microsoft Corporation in the United States and other countries.

ViewSonic® and the three birds logo are registered trademarks of ViewSonic® Corporation.

VESA is a registered trademark of the Video Electronics Standards Association. DPMS, DisplayPort, and DDC are trademarks of VESA.

ENERGY STAR® is a registered trademark of the U.S. Environmental Protection Agency (EPA).

As an ENERGY STAR® partner, ViewSonic® Corporation has determined that this product meets the ENERGY STAR® guidelines for energy efficiency.

Disclaimer: ViewSonic® Corporation shall not be liable for technical or editorial errors or omissions contained herein; nor for incidental or consequential damages resulting from furnishing this material, or the performance or use of this product.

In the interest of continuing product improvement, ViewSonic® Corporation reserves the right to change product specifications without notice. Information in this document may change without notice.

No part of this document may be copied, reproduced, or transmitted by any means, for any purpose without prior written permission from ViewSonic® Corporation.

PX700HDH_UG_ENG_1a_20240726

Customer Service

For technical support or product service, see the table below or contact your reseller.

NOTE: You will need the product's serial number.

Country/ Region	Website	Country/ Region	Website
Asia Pacific & Africa			
Australia	www.viewsonic.com/au/	Bangladesh	www.viewsonic.com/bd/
中国 (China)	www.viewsonic.com.cn	香港 (繁體中文)	www.viewsonic.com/hk/
Hong Kong (English)	www.viewsonic.com/hk-en/	India	www.viewsonic.com/in/
Indonesia	www.viewsonic.com/id/	Israel	www.viewsonic.com/il/
日本 (Japan)	www.viewsonic.com/jp/	Korea	www.viewsonic.com/kr/
Malaysia	www.viewsonic.com/my/	Middle East	www.viewsonic.com/me/
Myanmar	www.viewsonic.com/mm/	Nepal	www.viewsonic.com/np/
New Zealand	www.viewsonic.com/nz/	Pakistan	www.viewsonic.com/pk/
Philippines	www.viewsonic.com/ph/	Singapore	www.viewsonic.com/sg/
臺灣 (Taiwan)	www.viewsonic.com/tw/	ประเทศไทย	www.viewsonic.com/th/
Việt Nam	www.viewsonic.com/vn/	South Africa & Mauritius	www.viewsonic.com/za/
Americas			
United States	www.viewsonic.com/us	Canada	www.viewsonic.com/us
Latin America	www.viewsonic.com/la		
Europe			
Europe	www.viewsonic.com/eu/	France	www.viewsonic.com/fr/
Deutschland	www.viewsonic.com/de/	Қазақстан	www.viewsonic.com/kz/
Россия	www.viewsonic.com/ru/	España	www.viewsonic.com/es/
Türkiye	www.viewsonic.com/tr/	Україна	www.viewsonic.com/ua/
United Kingdom	www.viewsonic.com/uk/		

Limited Warranty

ViewSonic® Projector

What the warranty covers:

ViewSonic® warrants its products to be free from defects in material and workmanship, under normal use, during the warranty period. If a product proves to be defective in material or workmanship during the warranty period, ViewSonic® will, at its sole option, repair or replace the product with a like product. Replacement product or parts may include remanufactured or refurbished parts or components.

Limited Three (3) year General Warranty:

Subject to the more limited one (1) year warranty set out below, North and South America: Three (3) years warranty for all parts excluding the lamp, three (3) years for labor, and one (1) year for the original lamp from the date of the first consumer purchase.

Other regions or countries: Please check with your local dealer or local ViewSonic® office for the warranty information.

Limited One (1) year Heavy Usage Warranty:

Under heavy usage settings, where a projector's use includes more than fourteen (14) hours average daily usage, North and South America: One (1) year warranty for all parts excluding the lamp, one (1) year for labor, and ninety (90) days for the original lamp from the date of the first consumer purchase; Europe: One (1) year warranty for all parts excluding the lamp, one (1) year for labor, and ninety (90) days for the original lamp from the date of the first consumer purchase. Other regions or countries: Please check with your local dealer or local ViewSonic® office for the warranty information. Lamp warranty subject to terms and conditions, verification and approval. Applies to manufacturer's installed lamp only. All accessory lamps purchased separately are warranted for 90 days.

Who the warranty protects:

This warranty is valid only for the first consumer purchaser.

What the warranty does not cover:

1. Any product on which the serial number has been defaced, modified, or removed.
2. Damage, deterioration, or malfunction resulting from:
   - » Accident, misuse, neglect, fire, water, lightning, or other acts of nature, unauthorized product modification, or failure to follow instructions supplied with the product.
   - » Operation outside of product specifications.
   - » Operation of the product for other than the normal intended use or not under normal conditions.
   - » Repair or attempted repair by anyone not authorized by ViewSonic®.
   - » Any damage of the product due to shipment.
   - » Removal or installation of the product.
   - » Causes external to the product, such as electric power fluctuations or failure.
   - » Use of supplies or parts not meeting Viewsonic's specifications.
   - » Normal wear and tear.
   - » Any other cause which does not relate to a product defect.
3. Removal, installation, and set-up service charges.

How to get service:

1. For information about receiving service under warranty, contact ViewSonic® Customer Support (Please refer to the "Customer Support" page). You will need to provide your product's serial number.
2. To obtain warranted service, you will be required to provide: (a) the original dated sales slip, (b) your name, (c) your address, (d) a description of the problem, and (e) the serial number of the product.
3. Take or ship the product, freight prepaid, in the original container to an authorized ViewSonic® service center or ViewSonic®.
4. For additional information or the name of the nearest ViewSonic® service center, contact ViewSonic®.

Limitation of implied warranties:

There are no warranties, express or implied, which extend beyond the description contained herein including the implied warranty of merchantability and fitness for a particular purpose.

Exclusion of damages:

ViewSonic's liability is limited to the cost of repair or replacement of the product. ViewSonic® shall not be liable for:

1. Damage to other property caused by any defects in the product, damages based upon inconvenience, loss of use of the product, loss of time, loss of profits, loss of business opportunity, loss of goodwill, interference with business relationships, or other commercial loss, even if advised of the possibility of such damages.
2. Any other damages, whether incidental, consequential or otherwise.
3. Any claim against the customer by any other party.

Effect of state law:

This warranty gives you specific legal rights, and you may also have other rights which vary from local authority. Some local governments do not allow limitations on implied warranties and/or do not allow the exclusion of incidental or consequential damages, so the above limitations and exclusions may not apply to you.

Sales outside the U.S.A. and Canada:

For warranty information and service on ViewSonic® products sold outside of the U.S.A. and Canada, contact ViewSonic® or your local ViewSonic® dealer.

The warranty period for this product in mainland China (Hong Kong, Macao, and Taiwan Excluded) is subject to the terms and conditions of the Maintenance Guarantee Card.

For users in Europe and Russia, full details of warranty provided can be found at: http://www.viewsonic.com/eu/ under "Support/Warranty Information".

Projector Warranty Term Template In UG

VSC_TEMP_2005

Mexico Limited Warranty

ViewSonic® Projector

What the warranty covers:

ViewSonic® warrants its products to be free from defects in material and workmanship, under normal use, during the warranty period. If a product proves to be defective in material or workmanship during the warranty period, ViewSonic® will, at its sole option, repair or replace the product with a like product. Replacement product or parts may include remanufactured or refurbished parts or components & accessories.

How long the warranty is effective:

3 years for all parts excluding the lamp, 3 years for labor, 1 year for the original lamp from the date of the first consumer purchase.

Lamp warranty subject to terms and conditions, verification and approval. Applies to manufacturer's installed lamp only.

All accessory lamps purchased separately are warranted for 90 days.

Who the warranty protects:

This warranty is valid only for the first consumer purchaser.

What the warranty excludes and does not cover:

1. Any product on which the serial number has been defaced, modified or removed.

2. Damage, deterioration, or malfunction resulting from:

- » Accident, misuse, neglect, fire, water, lightning, or other acts of nature, unauthorized product modification, unauthorized attempted repair, or failure to follow instructions supplied with the product.
- » Any damage of the product due to shipment.
- » Causes external to the product, such as electrical power fluctuations or failure.
- » Use of supplies or parts not meeting ViewSonic®'s specifications.
- » Normal wear and tear.
- » Any other cause which does not relate to a product defect.

3. Any product exhibiting a condition commonly known as "image burn-in" which results when a static image is displayed on the product for an extended period of time.

4. Removal, installation, insurance, and set-up service charges.

How to get service:

For information about receiving service under warranty, contact ViewSonic® Customer Support (Please refer to the attached "Customer Service" page). You will need to provide your product's serial number, so please record the product information in the space provided below on your purchase for your future use. Please retain your receipt of proof of purchase to support your warranty claim.

For Your Records

Product Name: _____ Model Number: _____

Document Number: _____ Serial Number: _____

Purchase Date: _____ Extended Warranty Purchase? _____(Y/N)

If so, what date does warranty expire? _____

1. To obtain warranty service, you will be required to provide (a) the original dated sales slip, (b) your name, (c) your address, (d) a description of the problem, and (e) the serial number of the product.
2. Take or ship the product, in the original container packaging, to an authorized ViewSonic® service center.
3. Round trip transportation costs for in-warranty products will be paid by ViewSonic®.

Limitation of implied warranties:

There are no warranties, express or implied, which extend beyond the description contained herein including the implied warranty of merchantability and fitness for a particular purpose.

Exclusion of damages:

ViewSonic®'s liability is limited to the cost of repair or replacement of the product. ViewSonic® shall not be liable for:

1. Damage to other property caused by any defects in the product, damages based upon inconvenience, loss of use of the product, loss of time, loss of profits, loss of business opportunity, loss of goodwill, interference with business relationships, or other commercial loss, even if advised of the possibility of such damages.
2. Any other damages, whether incidental, consequential or otherwise.
3. Any claim against the customer by any other party.
4. Repair or attempted repair by anyone not authorized by ViewSonic®.

Contact Information for Sales & Authorized Service (Centro Autorizado de Servicio) within Mexico:	
Name, address, of manufacturer and importers: México, Av. de la Palma #8 Piso 2 Despacho 203, Corporativo Interpalmas, Col. San Fernando Huixquilucan, Estado de México Tel: (55) 3605-1099 http://www.viewsonic.com/la/soporte/index.htm	
NÚMERO GRATIS DE ASISTENCIA TÉCNICA PARA TODO MÉXICO: 001.866.823.2004	
Hermosillo: Distribuciones y Servicios Computacionales SA de CV. Calle Juarez 284 local 2 Col. Bugambilias C.P: 83140 Tel: 01-66-22-14-9005 E-Mail: disc2@hmo.megared.net.mx	***Villahermosa:*** Compumantenimietnos Garantizados, S.A. de C.V. AV. GREGORIO MENDEZ #1504 COL, FLORIDA C.P. 86040 Tel: 01 (993) 3 52 00 47 / 3522074 / 3 52 20 09 E-Mail: compumantenimientos@prodigy.net.mx
Puebla, Pue. (Matriz): RENTA Y DATOS, S.A. DE C.V. Domicilio: 29 SUR 721 COL. LA PAZ 72160 PUEBLA, PUE. Tel: 01(52).222.891.55.77 CON 10 LINEAS E-Mail: datos@puebla.megared.net.mx	***Veracruz, Ver.:*** CONEXION Y DESARROLLO, S.A DE C.V. Av. Americas # 419 ENTRE PINZÓN Y ALVARADO Fracc. Reforma C.P. 91919 Tel: 01-22-91-00-31-67 E-Mail: gacosta@qplus.com.mx
Chihuahua: Soluciones Globales en Computación C. Magisterio # 3321 Col. Magisterial Chihuahua, Chih. Tel: 4136954 E-Mail: Cefeo@soluglobales.com	***Cuernavaca:*** Compusupport de Cuernavaca SA de CV Francisco Leyva # 178 Col. Miguel Hidalgo C.P. 62040, Cuernavaca Morelos Tel: 01 777 3180579 / 01 777 3124014 E-Mail: aquevedo@compusupportcva.com
Distrito Federal: QPLUS, S.A. de C.V. Av. Coyoacán 931 Col. Del Valle 03100, México, D.F. Tel: 01(52)55-50-00-27-35 E-Mail : gacosta@qplus.com.mx	***Guadalajara, Jal.:*** SERVICRECE, S.A. de C.V. Av. Niños Héroes # 2281 Col. Arcos Sur, Sector Juárez 44170, Guadalajara, Jalisco Tel: 01(52)33-36-15-15-43 E-Mail: mmiranda@servicrece.com
Guerrero Acapulco: GS Computación (Grupo Sesicomp) Progreso #6-A, Colo Centro 39300 Acapulco, Guerrero Tel: 744-48-32627	***Monterrey:*** Global Product Services Mar Caribe # 1987, Esquina con Golfo Pérsico Fracc. Bernardo Reyes, CP 64280 Monterrey N.L. México Tel: 8129-5103 E-Mail: aydeem@gps1.com.mx
MERIDA: ELECTROSER Av Reforma No. 403Gx39 y 41 Mérida, Yucatán, México CP97000 Tel: (52) 999-925-1916 E-Mail: rrrb@sureste.com	***Oaxaca, Oax.:*** CENTRO DE DISTRIBUCION Y SERVICIO, S.A. de C.V. Murguía # 708 P.A., Col. Centro, 68000, Oaxaca Tel: 01(52)95-15-15-22-22 Fax: 01(52)95-15-13-67-00 E-Mail. gpotai2001@hotmail.com
Tijuana: STD Av Ferrocarril Sonora #3780 L-C Col 20 de Noviembr Tijuana, Mexico	***FOR USA SUPPORT:*** ViewSonic® Corporation 381 Brea Canyon Road, Walnut, CA. 91789 USA Tel: 800-688-6688 E-Mail: http://www.viewsonic.com

Projector Mexico Warranty Term Template In UG
VSC_TEMP_2006

ViewSonic®