GYMAPTUS

easier & fun & smarter

USER MANUAL

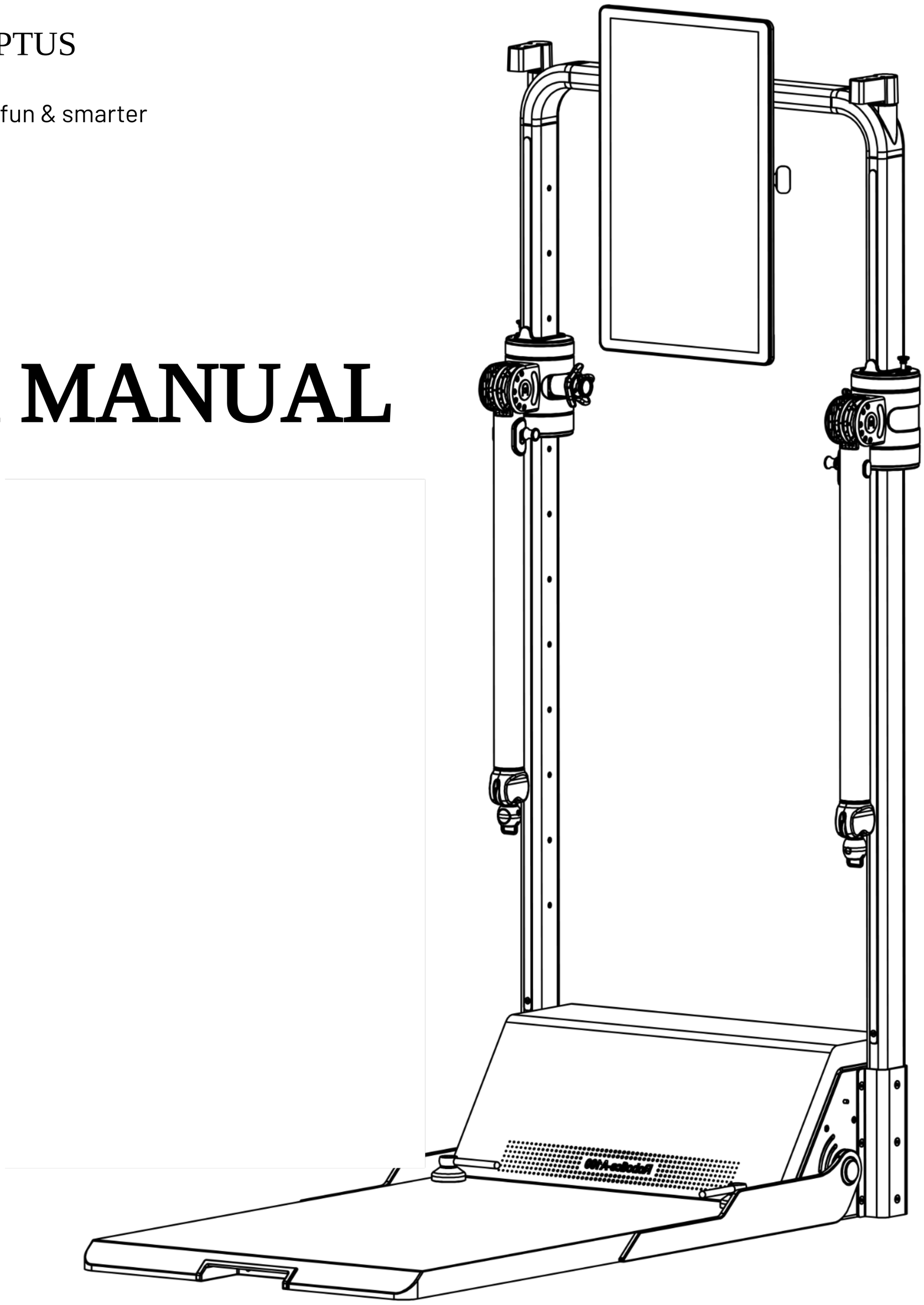

Intelligent Integrated Strength Training Robot

Please read carefully before use and keep it properly.

Welcome

Welecome

Dear User, Thank you for choosing the GYMAPTUS Intelligent Integrated Strength Training Robot. Please read this manual carefully before use to ensure proper operation.

In particular, please read the "Safety Precautions" section carefully and follow all instructions to avoid risks. Any consequences arising from improper use or failure to follow the recommended instructions shall be borne by the user. GYMAPTUS, the product designer , reserves the final right of interpretation.

Applicable Standards: GB 17498.1-2008, GB 17498.2-2008

Class H for home use

Maximum User Weight: 150 kg

Maximum Training Load: 100 kg

Guides for all workout modes are available on the official account.

GYMAPTUS

easier & fun & smarter

CONTENTS

Contents

01 Safety Precautions

1. Important Safety Instructions P02

2. Power Switch Precautions P02

3. Medical Warnings P03

4. Routine Maintenance and Inspection P04

5. Precautions for Use by Minors P04

Product Introduction

1. Product Overview P07

2. Arm Functions P09

3. Accessories P12

How To Use

1. Placement P14

2. Connecting the Power and Turning On P14

3. Folding/Unfolding the Pedals P15

4. Wi-Fi Connection P16

Contents

5.Smart Handle Connection P17

6.Bluetooth Controller Connection P17

7.Body Composition Scale Connection P18

8.Replacing Accessories P18

9.Account Login P19

Non-Fault Conditions and Solutions

1. Non-Fault Conditions and Solutions P21

Cleaning and Maintenance

1. Machine Cleaning P23

2. Screen Maintenance P23

Service Guide

1. Service Guide P25

CONTENTS

Ⅰ. Safety Precautions

1. Important Safety Instructions

1. This equipment is for indoor use only. Do not place it outdoors. Keep it away from water and moisture. Do not operate this product in flammable or explosive environments.
2. You are responsible for your own safety and the safety of others. Ensure that all operations involving this equipment and its accessories comply with the relevant safety standards and instructions.
3. The pedals are the designated safe standing area. Always stand on the pedals when using the equipment to prevent injury caused by the equipment tipping over.
4. Do not use this product while intoxicated or if you are feeling unwell.
5. To prevent overheating, fire, electric shock, or other hazards, do not cover the equipment with any objects.
6. This product is intended only for the purposes described in this manual.
7. Do not use accessories that have not been recommended by the manufacturer.

2. Power Switch Precautions

1.Do not touch, operate, or use this product with wet hands or a wet body.
2.The shutdown process consists of two steps: first, turn off the main power switch; second, unplug the power cord from the outlet.

3. Keep the control switch away from any liquids. If it comes into contact with liquid, please contact our service hotline for assistance.

⚠ 3. Medical Warnings

1. Before starting any exercise program, consult a medical professional to confirm that you are physically fit for the activity. Follow your doctor's instructions strictly. You are solely responsible for any consequences resulting from exercising against medical advice.
2. Stop exercising immediately and consult a doctor if you experience dizziness, chest pain, shortness of breath, or any other unusual symptoms,
3. Consult your doctor before using this product if you are taking medication that may affect your heart rate,
4. People with limited mobility, delayed sensory responses, impaired mental function, or those advised by a doctor to avoid strenuous exercise should not use this product unless supervised and guided by someone responsible for their safety. People over 65 with underlying health conditions should consult a medical professional before using this product. Improper or excessive training may result in serious injury or even death.

4. Routine Maintenance and Inspection

Before each use, check the product for any signs of damage or wear. If you notice anything unusual, stop using the product. Please contact customer service promptly for information on safe and proper use of the product.
Stop using the product immediately and unplug the power cord from the outlet in any of the following situations:

1.Water is accidentally splashed onto the product or control switch.
2. Any accessories are damaged or internal components are exposed.
3. Any abnormal conditions occur during operation, such as smoke or unusual odors.
4. With the resistance set to the lowest level, pull out the left and right arm ropes to check for signs of wear.(The ropes must be replaced after more than 12,000 uses or 3 years of continuous use.)
5. A sudden power failure occurs.
6. During a lightning storm.

5. Precautions for Use by Minors

1. This product and its accessories are designed for fitness users aged 18 and above. Children aged 13 or below are not permitted to use this product.

2. Teenagers aged 14 and above may use this equipment under guardian supervision with prior approval from a doctor. Guardians must read and understand all safety instructions in this manual, be aware of potential risks, and inform minors accordingly before use.
3. Do not allow children to play with this product or its accessories, as certain parts or functions may cause serious injury or death.
4. Children must be supervised at all times. Do not allow them to climb on the equipment to prevent tipping and possible serious injury or death.

Ⅱ. Product Introduction

1. Product Overview

Product Overview	
Weight	97KG
BluetoothVersion	BLUETOOTH5.0
WIFI	2.4GHz / 5GHz
Relative Humidity	20% - 80%
Input Voltage	220V
Input Frequency	50Hz
Input Power	2200W（max）
Required Floor Space	2*2 m (maximum space required during training)

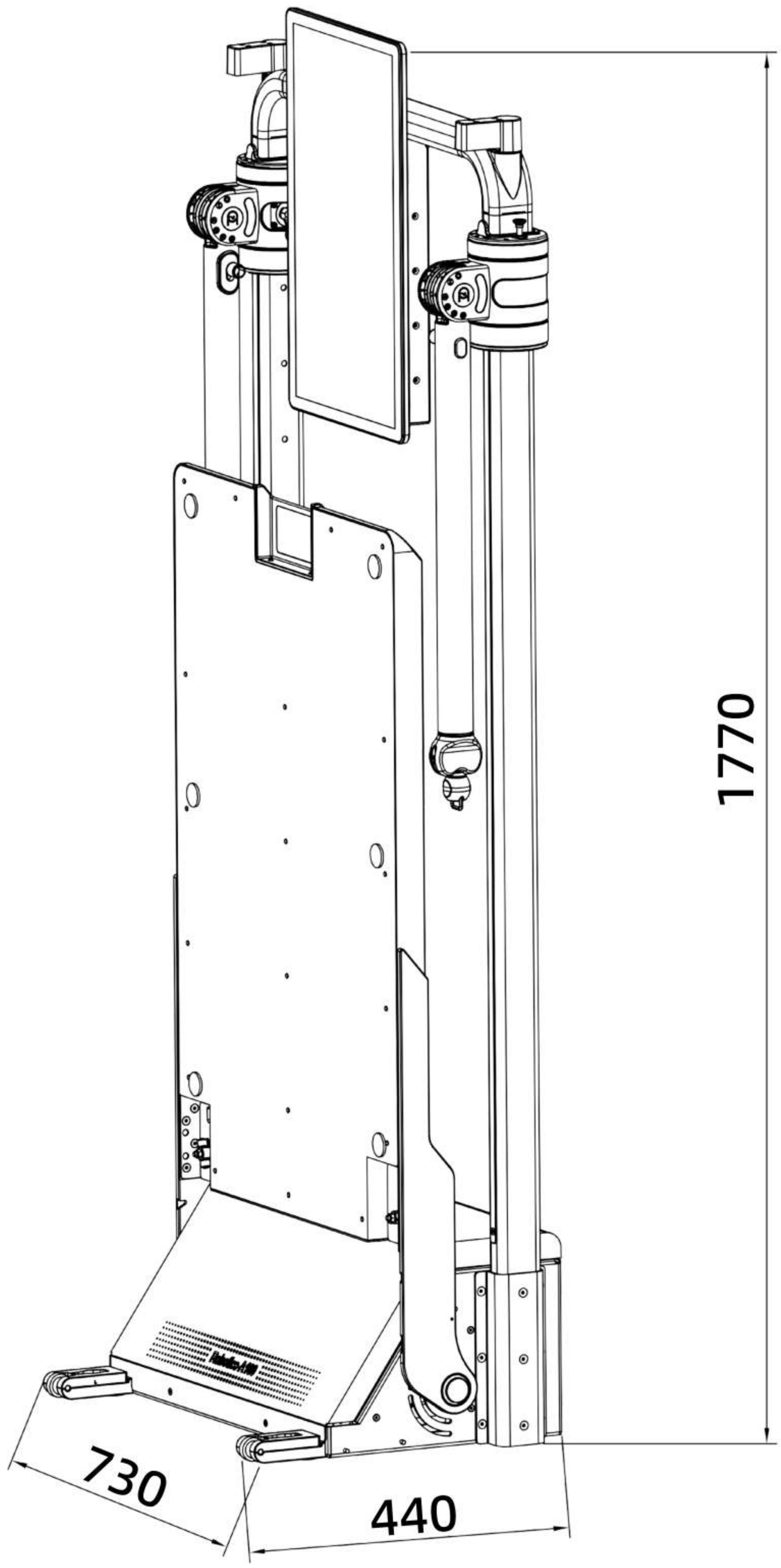

GYMAPTUS
easier & fun & smarter

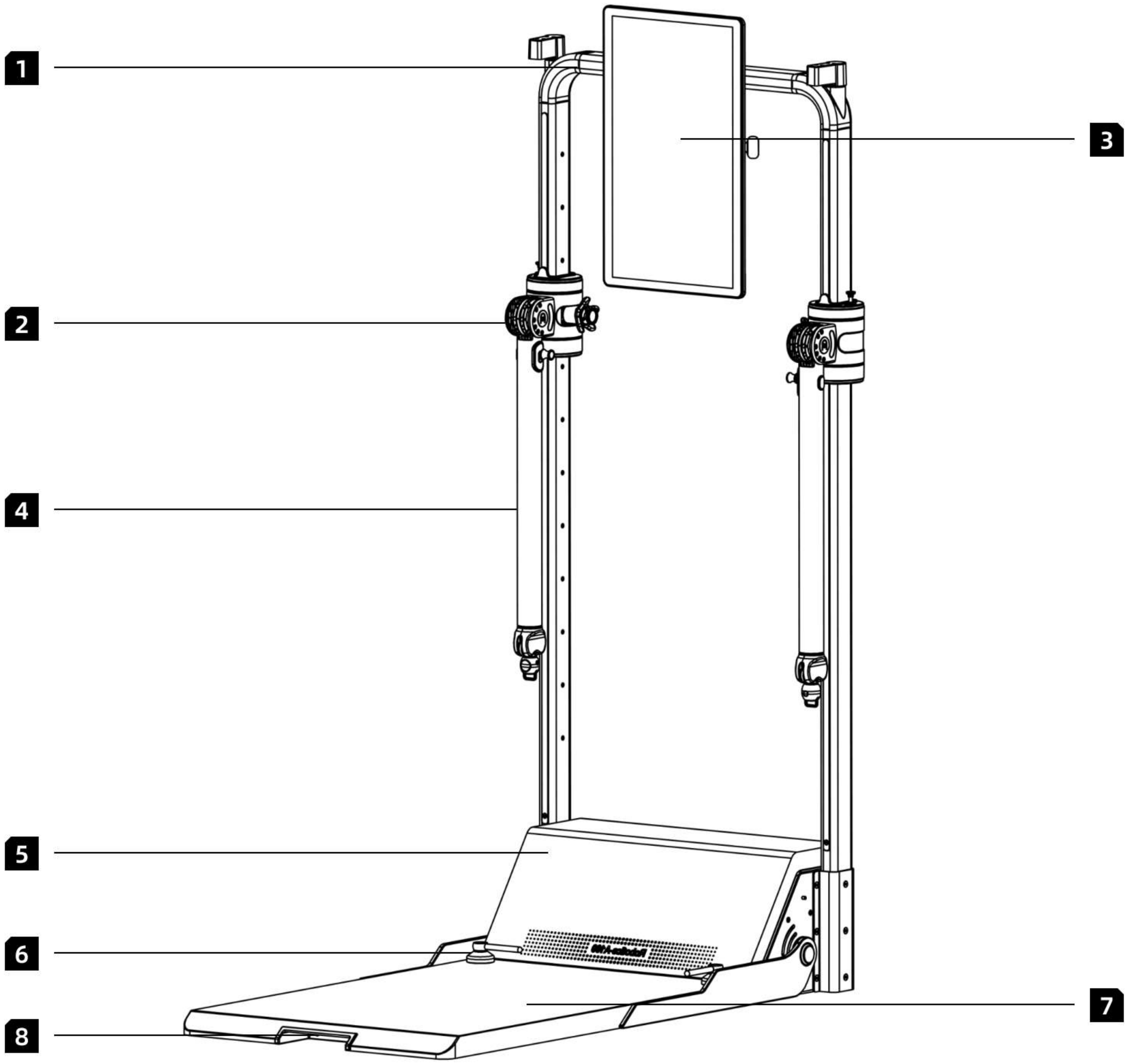

1 Cable Crossover Frame	2 Adjustable Joint	3 Display Screen	4 Arms
5 Baffle	6 Locking Handle	7 Pedals	8 Pedal Handrail

2. Arm Functions

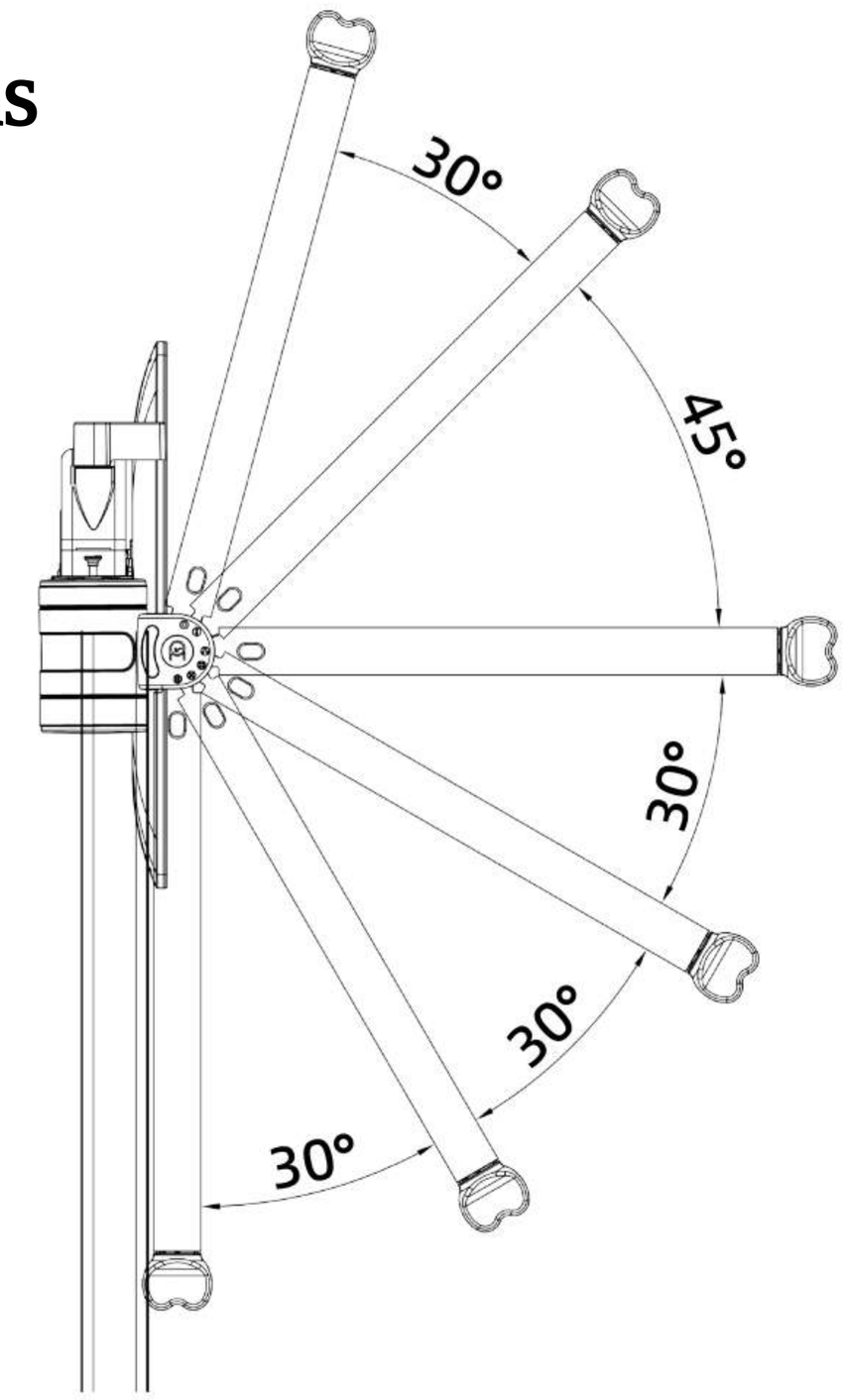

Press and hold the button on the arm, then pull the arm backward. Use your other hand to move the arm up or down to the desired position, then release the button to complete the vertical angle adjustment.

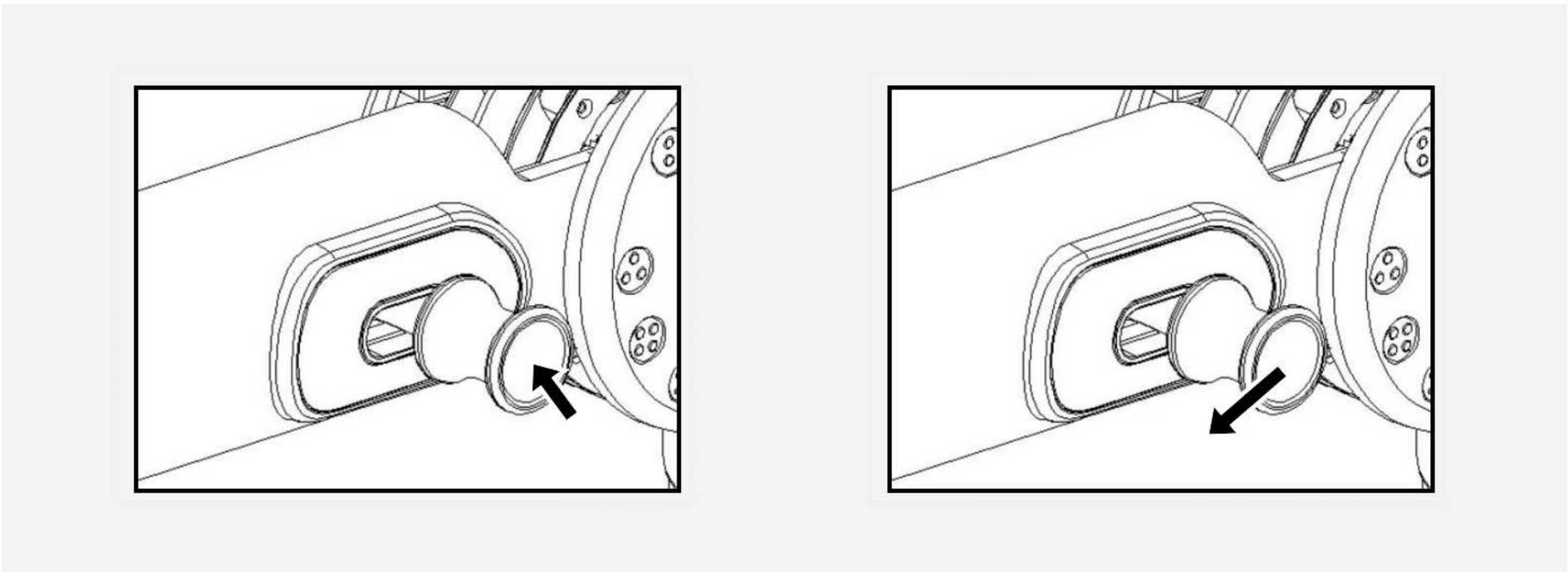

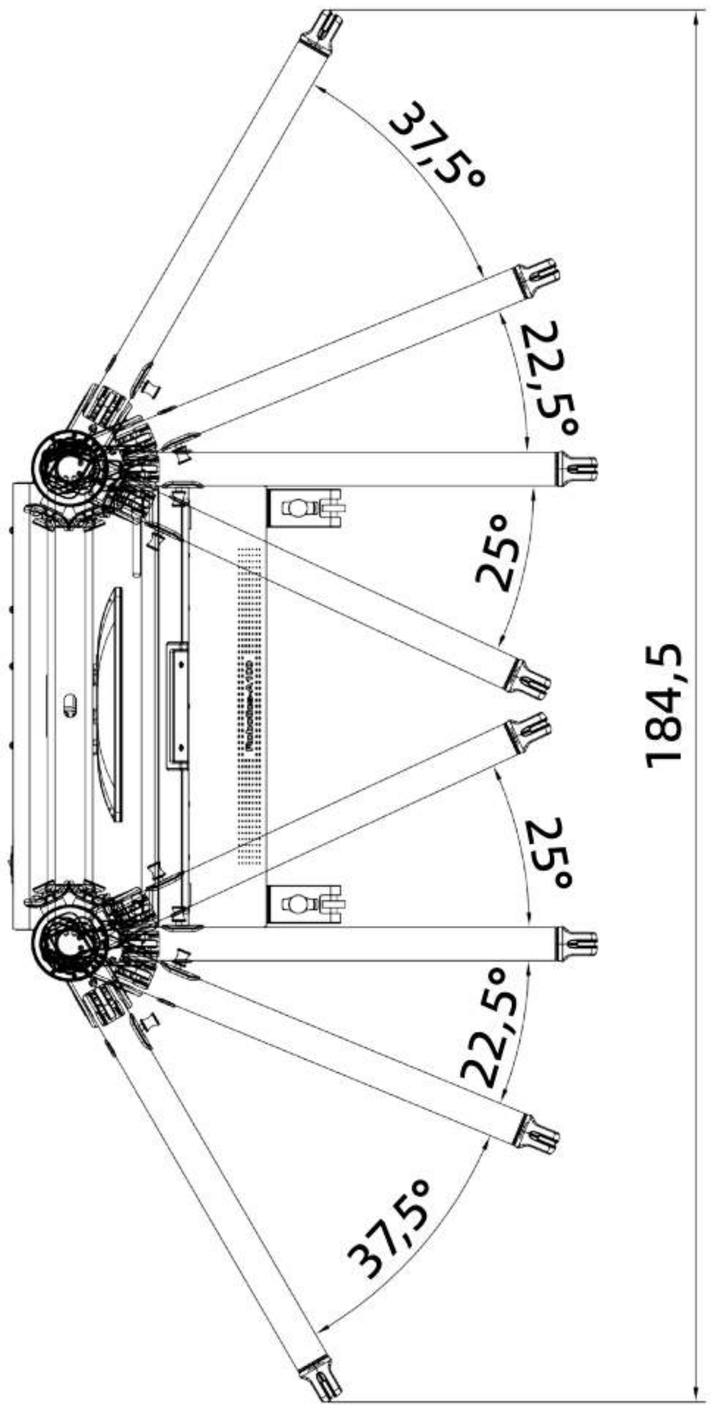

Press and hold the button downward, then use your other hand to adjust the arm left or right to the desired angle. Release the button to complete the horizontal angle adjustment.

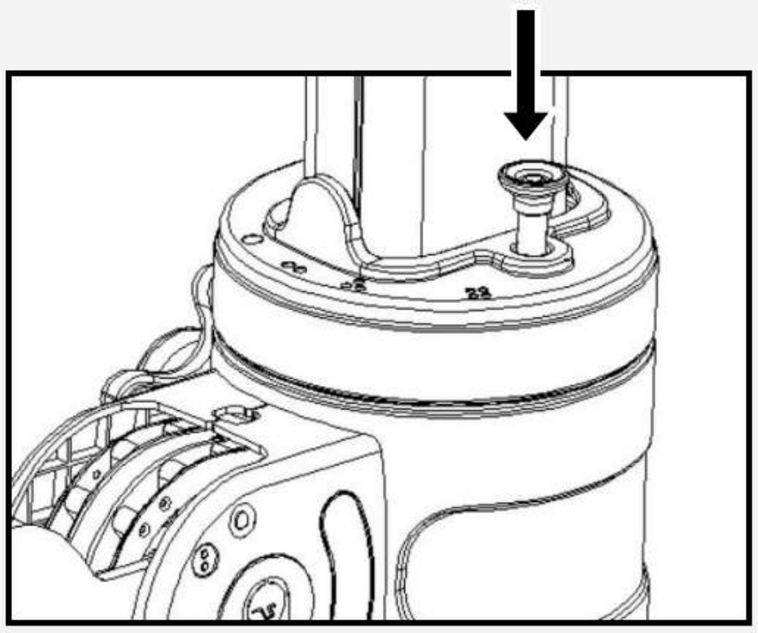

Note: Do not hang any objects on the mechanical arms when they are extended. After training, remove all accessories and return the arms to their original position.

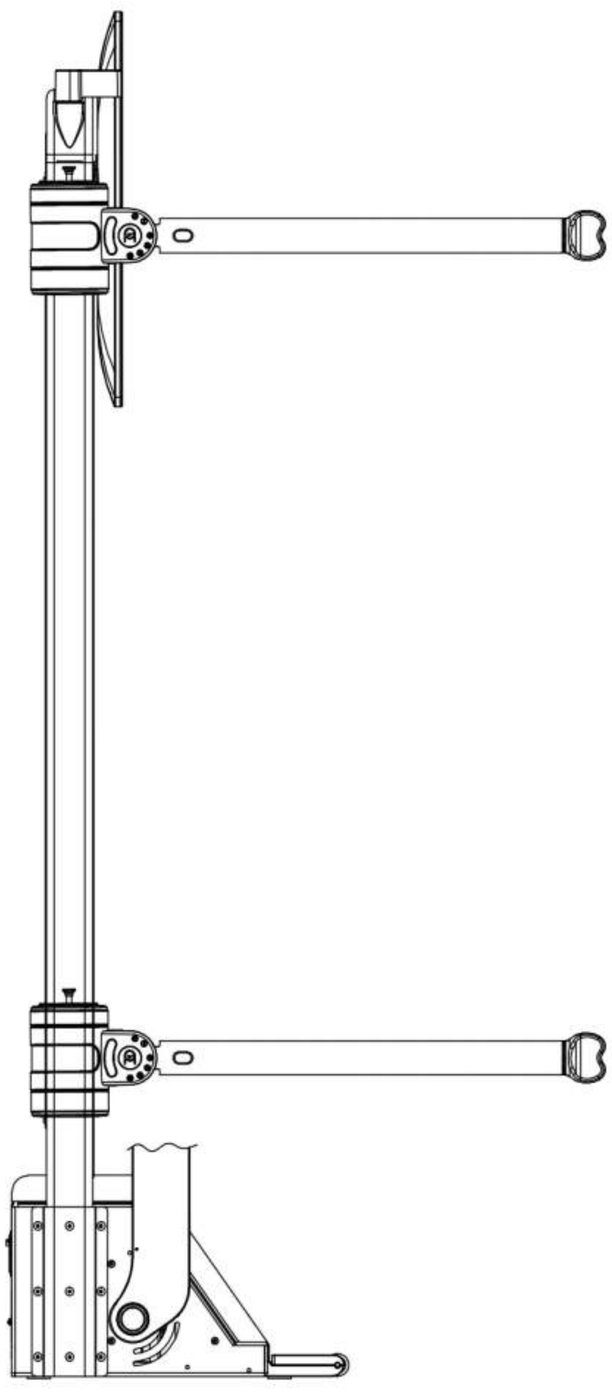

Pull out the locking pin, then adjust the arm up or down to the desired position. Release the locking pin to lock the arm in place.

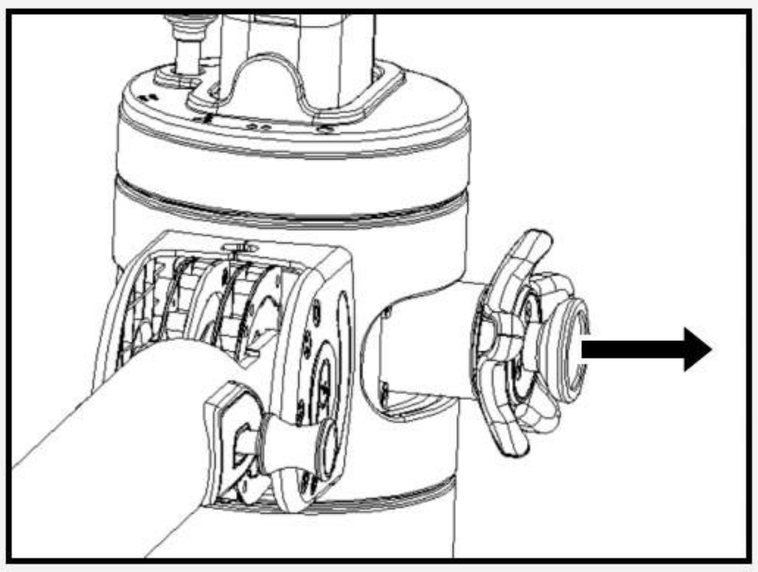

GYMAPTUS
easier & fun & smarter

Main Unit and Accessories

Name	Quantity	Type
Intelligent Integrated Strength Training Machine	1	Main Unit
Long Bar	1	Accessory
Bluetooth Controller	1	Accessory
Bluetooth Handle	2	Accessory
Double-Ended Rope	1	Accessory
Flat Workout Bench	1	Accessory
Ankle Strap	2	Accessory
Power Cord	1	Installation Accessory
User Manual	1	User Instructions

III. How to Use

GYMAPTUS
easier & fun & smarter

1. Placement

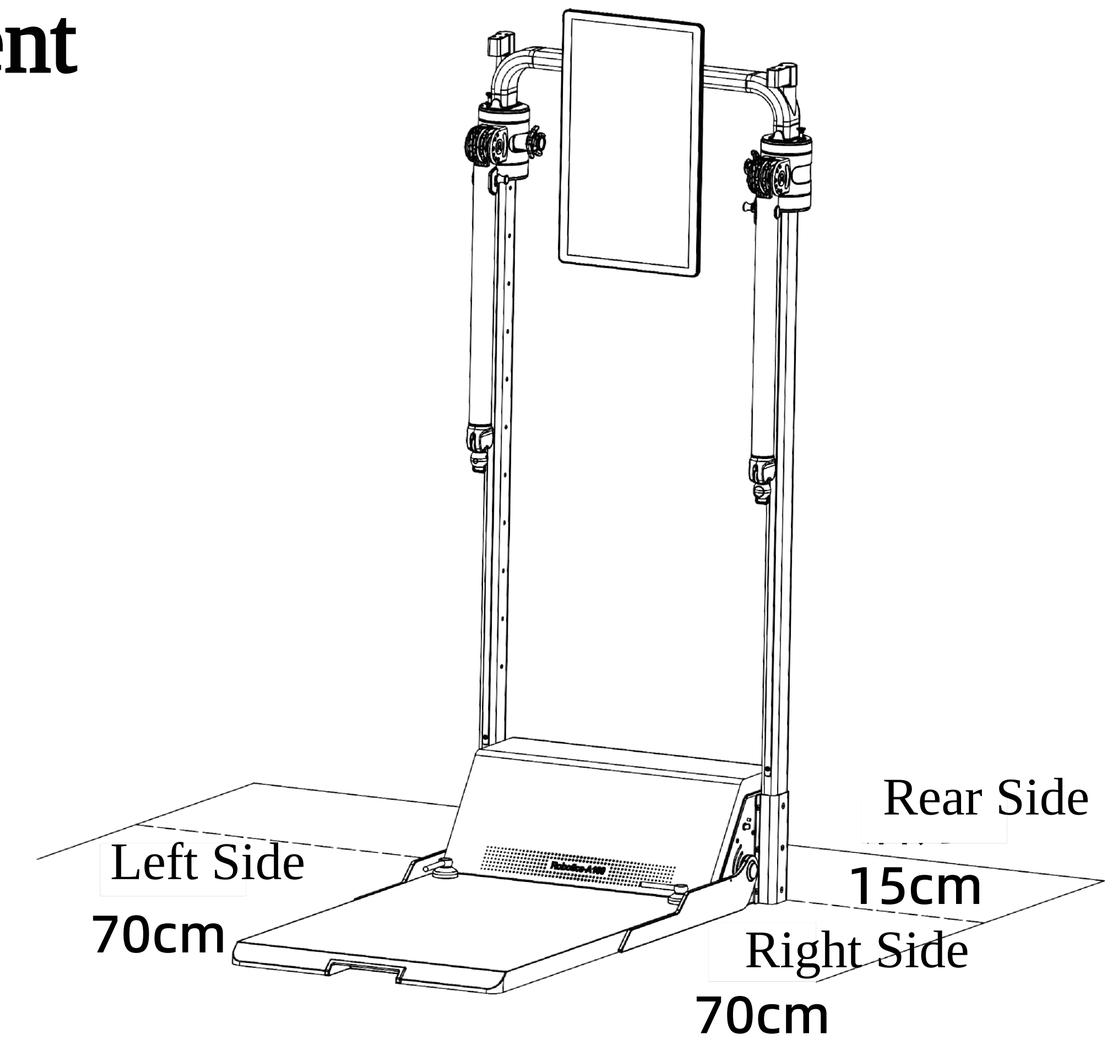

Place the equipment on a flat and level surface. Keep a distance of more than 15 cm between the back of the equipment and the wall. Leave at least 70 cm of clearance on both sides to ensure the arms can extend freely.

2. Connecting the Power and Turning On

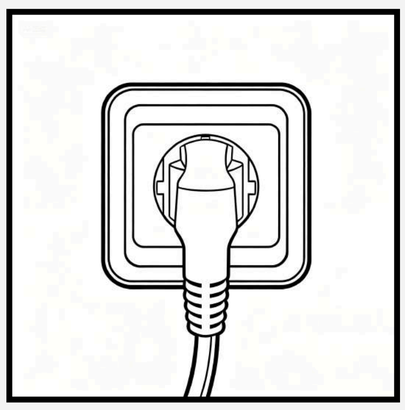

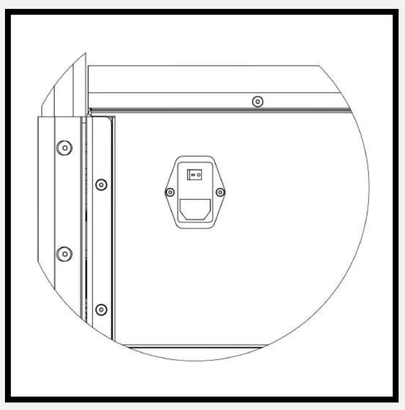

Connect the equipment to the power outlet using the provided leakage-protection power cord, then press the power button to turn on the device.

3. Folding/Unfolding the Pedals

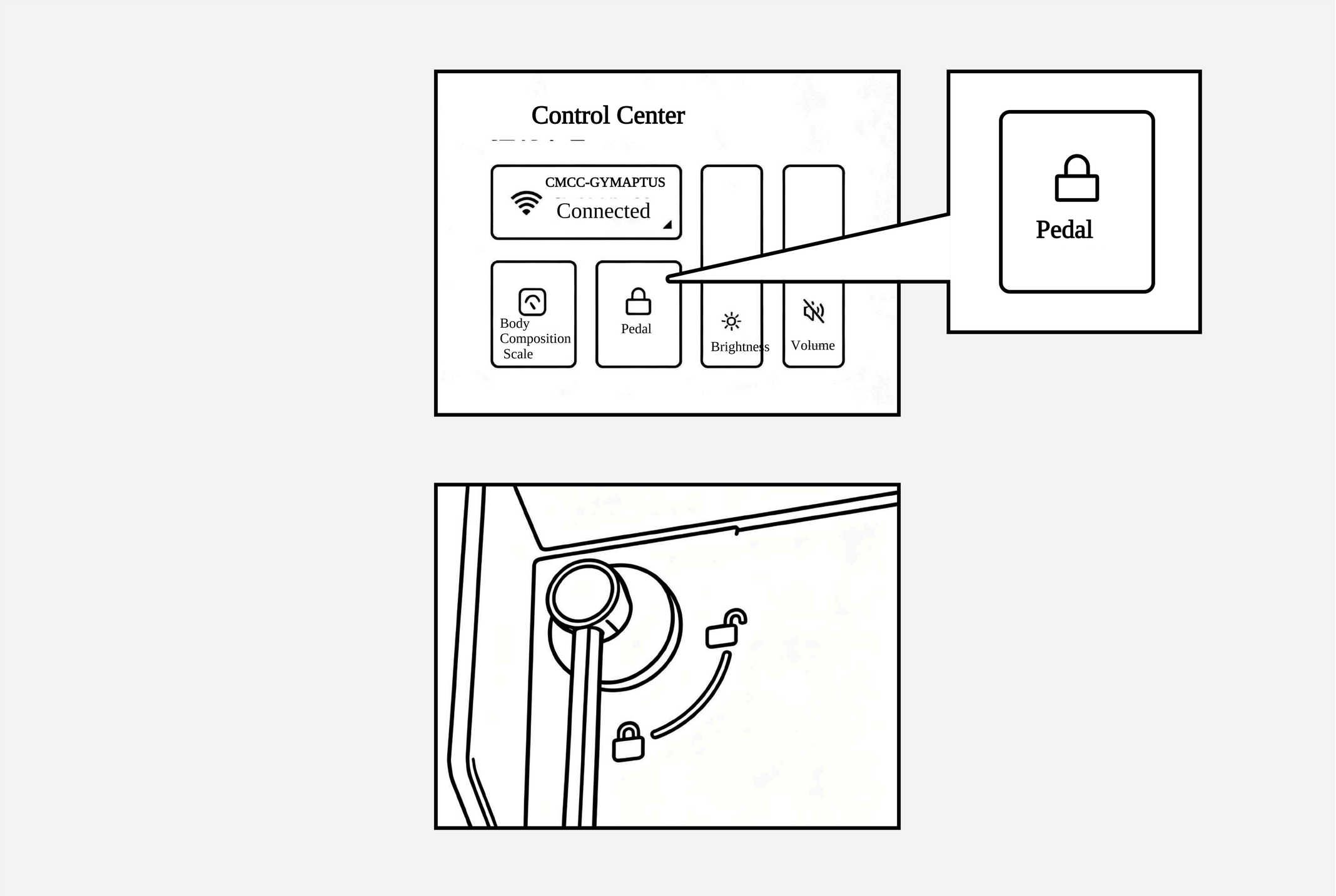

Pedal Folding and Unfolding

After powering on the equipment and entering the main interface, swipe down from the top of the screen and tap “ Pedal” . Gently push the pedal until you hear a click, then unfold the pedal and lock it according to the instructions shown on both sides of the pedal.

After training, if you need to fold the pedal, release it according to the instructions on both sides and fold it up. When you hear a click, the pedal has been successfully folded.

GYMAPTUS
easier & fun & smarter

Precautions

1.The pedal is heavy. Use caution when unfolding or folding it.
2.Before unfolding the pedal, make sure the area is clear of any obstacles to prevent safety hazards caused by an uneven surface.
3.The arms must be retracted before folding the pedal.

4. Wifi Connection

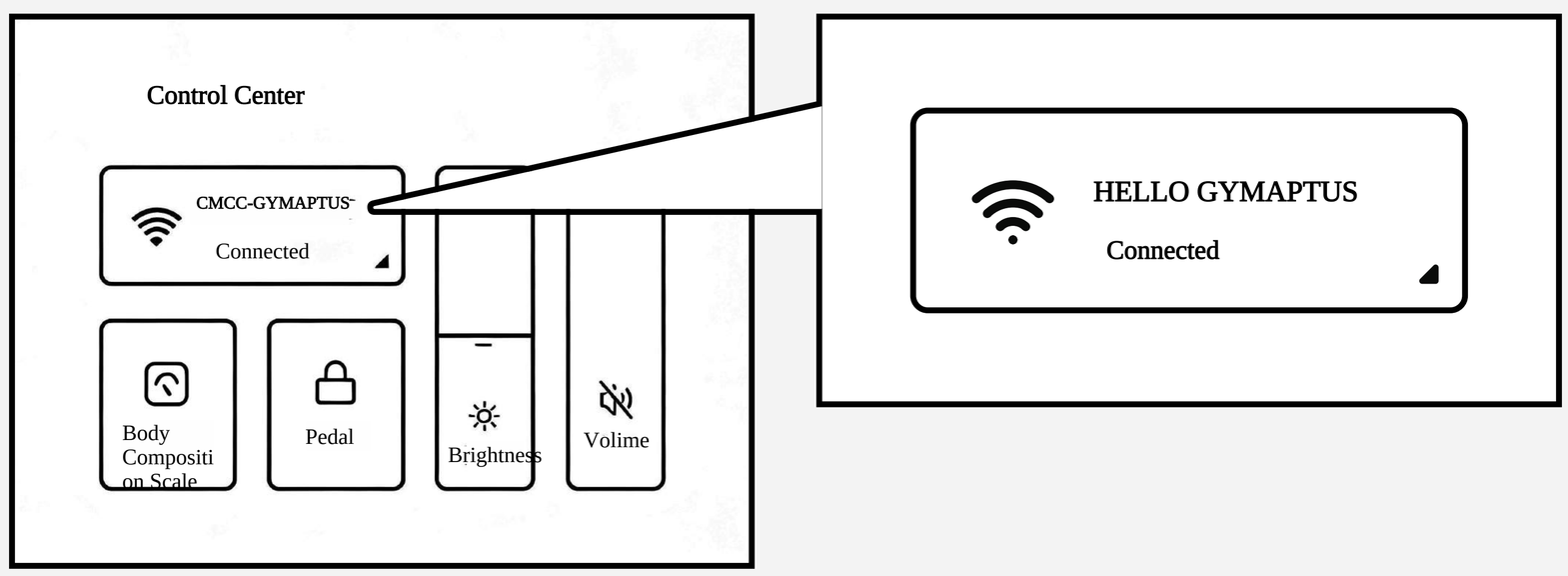

When using the equipment for the first time, a Wi-Fi connection is required. After powering on the device and entering the main interface, swipe down on the screen, tap the Wi-Fi icon, and select a Wi-Fi network to connect.

5. Smart Handle Connection

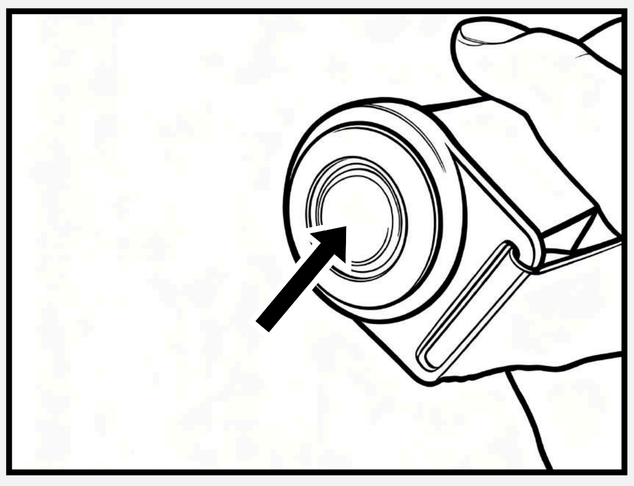

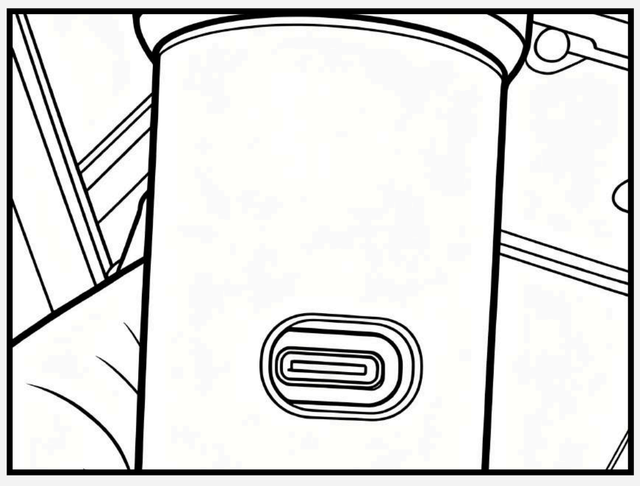

- When the handle is not connected to Bluetooth, the blue indicator light flashes. Press and hold the button on either side of the handle to start Bluetooth pairing. When the blue light stays on, the Bluetooth connection is successful, and the handle can be used for training according to the selected program.
- After a period of use, the green indicator light will flash, indicating low battery. Charge the handle using the Type-C port. When the green light stays on, charging is complete.

6. Bluetooth Controller Connection

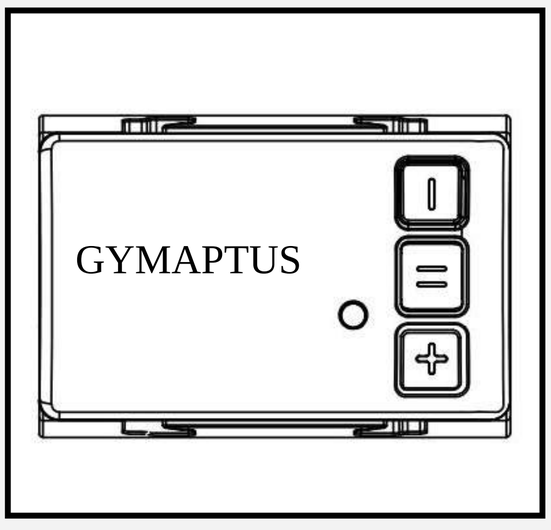

- When the pull rod is not connected to Bluetooth, the blue indicator light flashes. Press and hold the button to start Bluetooth pairing. When the blue light stays on, the Bluetooth pairing is complete, and the rod can be used for training according to the selected program.
- After a period of use, the green indicator light will flash, indicating low battery. Charge the rod using the Type-C port.When the green light stays on, charging is complete.

GYMAPTUS
easier & fun & smarter

7. Body Composition Scale Connection

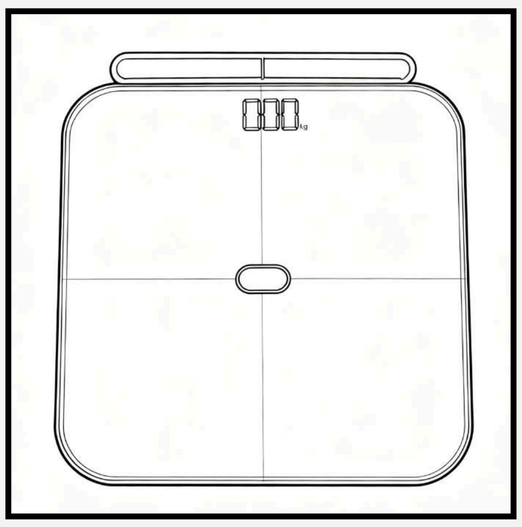

This accessory connects automatically and can be used directly.

8. Replacing Accessories

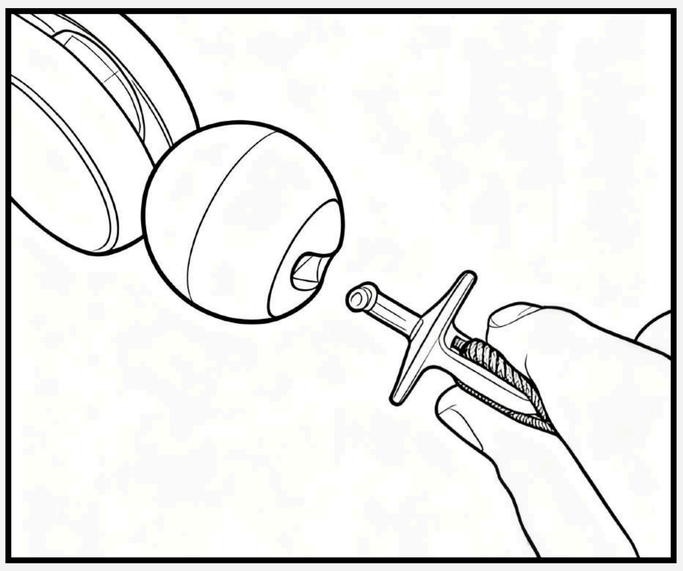

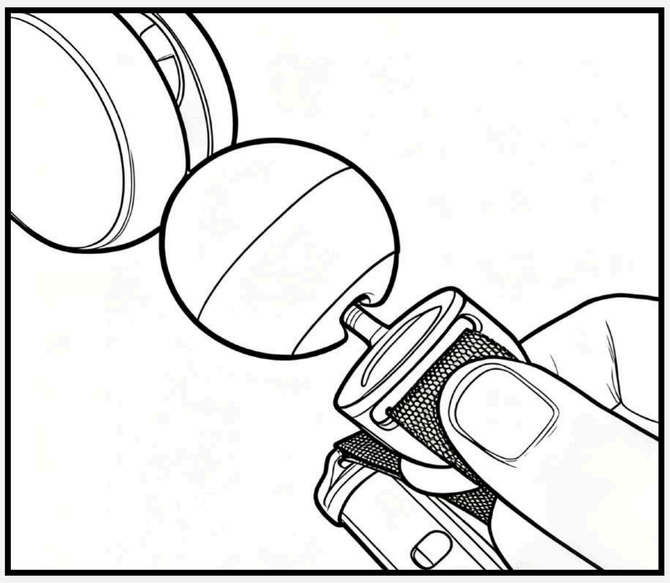

- Align the connector with the opening direction of the ball head, insert it, press down, and rotate it 90° to lock it in place.
- The connector is compatible with all accessories (Bluetooth handle, long pull rod, double -ended rope, leg strap, etc.).
- If the connector becomes loose, stop using the equipment immediately and contact customer service.

9. Account Login

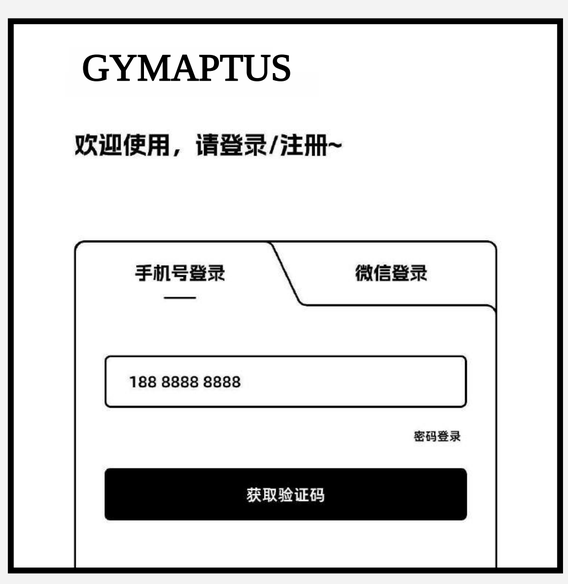

this product requires a Wi-Fi connection to access the latest workout records, training programs , software updates, and other features.

> 1.If you are using this product for the first time, please create your personal account first.
>
> 2.If this equipment is shared with others, please log out of your personal account after each workout to protect your account security.

Ⅳ. Non-Fault Conditions and Solutions

Ⅳ. Non-Fault Conditions and Solutions

GYMAPTUS
easier & fun & smarter

Note: If the problem persists after checking the non-fault conditions, disconnect the power supply and contact customer service.

Non-Fault Conditions	Cause Analysis	Solutions
Not operate after power-on	• Leakage protection switch off • Plug not properly connected	• Press the leakage protection switch • Reconnect the plug properly
Loud noise from the machine during use	• Internal temperature rises during use, causing fan speed increase	• Normal condition. Operation will resume after the temperature decreases
Equipment shakes during use	• Uneven floor • Pedal not locked	• Place on a level surface or adjust the base • Rotate the locking device to the locked position
Handle/Bluetooth controller buttons not responding	• Indicator flashes after pressing button • Low battery	• Re-pair Bluetooth until the indicator stays on • Charge the accessory
Locking handle is too loose	• Loose nut	• Tighten the nut on the back of the pedal with pliers
Pedal cannot be lowered after tapping "Pedal" on the screen	• Pedal weight causes the locking pin to jam	• Push the pedal forward, then press "Pedal" again
Star knob cannot be rotated	• Handle stuck	• Rotate firmly in the opposite direction
Arm vertical adjustment button cannot be pulled	• Improper use	• Hold the arm with one hand and gently move it up and down; press the button and pull it toward you with the other hand
Arm module does not slide smoothly up and down	• No load release	• Slide the arm under no-load condition
Rope comes off	• Cable broken in the middle • One end detached	• Contact after-sales service • Reconnect the rope according to the repair video if needed

V . Cleaning and Maintenance

1. Machine Cleaning

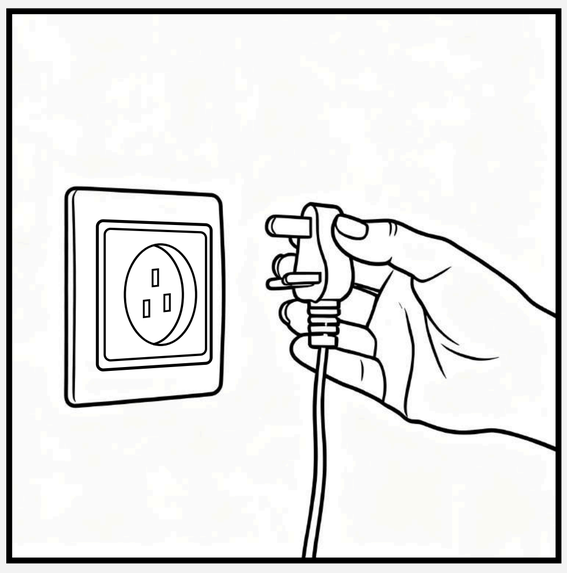

1. Stop the equipment and disconnect the power supply before cleaning.

2. Do not use volatile oil, alcohol, thinner, or other solvents to clean the machine, as they may damage the equipment.

2. Screen Maintenance

1. Use a dry cloth or other soft fabric to gently wipe fingerprints, dirt, and stains from the display.

2. It is recommended to use the same cleaning methods as those for other electronic devices (such as mobile phones or laptop screens).

When the product is not in use for an extended period, unplug the power cord to prevent electric shock or fire caused by cable aging.

VI. Service Guide

1. After-Sales Service Warranty Policy

- Users who purchase this product and complete the warranty registration as required are entitled to the warranty service provided by our company.
- For household use, the entire machine is covered by a 1-year warranty. Main components (motor, power supply, and display) are covered by a 2-year warranty.
- For non-household use (such as commercial or public use by multiple users), the entire machine and main components (motor, power supply, and display) are covered by a 6-month warranty.

- Warranty Conditions:

> 1. A valid purchase invoice or proof of purchase can be provided.
>
> 2. The product is within the warranty period (calculated from the date of the purchase invoice or proof of purchase).
>
> 3. The failure is caused by non-human factors and is not due to improper use or improper storage.
>
> 4. If a valid proof of purchase cannot be provided, the warranty period may be calculated based on the production date shown on the product barcode. If the barcode is missing, damaged, or unreadable, warranty service will not be provided.

2. Items Not Covered Under the Warranty (Chargeable Service)

- Damage caused by using a power supply that does not comply with national safety voltage standards.
- Product contamination, blockage, corrosion, or other damage caused by poor usage environments.
- No valid purchase invoice or proof of purchase.
- Products beyond the warranty period.
- Damage caused by force majeure.
- Services or items not covered by our company's warranty commitments.

3. Disclaimer

> 1. This product complies with the relevant requirements of GB 17498 standards.
>
> 2. This manual is for reference only. The actual product appearance and components shall prevail.
>
> 3. Please read the user manual and electronic manual carefully before use. Any product upgrades or changes made after purchase shall be subject to the electronic manual available on the official WeChat account and website.
>
> 4. After reading and confirming all relevant information, please keep this manual together with the purchase invoice in a safe place.

HELLO

Strength Explorer

One Machine for Every Workout

Train Anytime, Your Way.

GYMAPTUS

✦ ✦ ✦ HELLO

GYMAPTUS

GYMAPTUS (Changzhou) Intelligent Technology Co., Ltd.

400-015-1518

gymaptus@outlook.com

No. 7 Longmen Road, Changzhou City, Jiangsu Province

FCC Caution.

This device complies with part 15 of the FCC Rules. Operation is subject to the following two conditions:

(1) This device may not cause harmful interference, and

(2) this device must accept any interference received, including interference that may cause undesired operation.

Any Changes or modifications not expressly approved by the party responsible for compliance could void the user's authority to operate the equipment.

Note: This equipment has been tested and found to comply with the limits for a Class B digital device, pursuant to part 15 of the FCC Rules. These limits are designed to provide reasonable protection against harmful interference in a residential installation. This equipment generates uses and can radiate radio frequency energy and, if not installed and used in accordance with the instructions, may cause harmful interference to radio communications. However, there is no guarantee that interference will not occur in a particular installation. If this equipment does cause harmful interference to radio or television reception, which can be determined by turning the equipment off and on, the user is encouraged to try to correct the interference by one or more of the following measures:

-Reorient or relocate the receiving antenna.

-Increase the separation between the equipment and receiver.

-Connect the equipment into an outlet on a circuit different from that to which the receiver is connected.

-Consult the dealer or an experienced radio/TV technician for help.

FCC Radiation Exposure Statement:

The device has been evaluated to meet general RF exposure requirement. The device can be used in portable exposure condition without restriction.