BOTTOM MOUNTED
COMMERCIAL REFRIGERATOR/FREEZER

User Manual

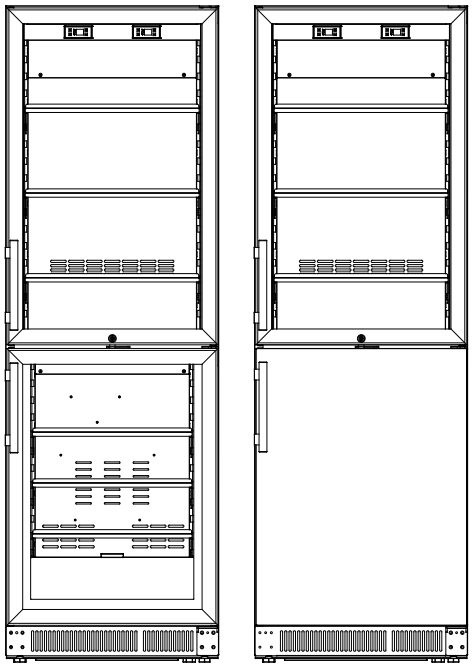

MODELS:

SCRF12 LCRF125 ACRF115 ACRF116GS

BEFORE USE, PLEASE READ AND FOLLOW ALL SAFETY RULES AND OPERATING INSTRUCTIONS.

Models:	**Serial Number:**

Felix Storch, Inc.
An ISO 9001:2015 registered company
770 Garrison Ave
Bronx, New York 10474
www.summitappliance.com

TABLE OF CONTENTS

Appliance Safety ***3***

Important Safeguards ***3-5***

Disposal ***5***

Electrical Connection ***6***

Location of Parts ***7***

Installation Instructions ***8-11***

Before Using Your Appliance *8*

Installation of Your Appliance *8-9*

Reversing the Door Swing of Your Appliance *10*

Installing the Stainless Steel Handle *11*

Operating Your Appliance ***12-15***

Control Panel *12-14*

Sabbath Mode *14*

Temperature Memory Function *14*

Defrosting *14*

Using the Freezer *15*

Temperature Alarm / Door Alarm *15*

Door Lock *15*

Shelves *15*

Care and Maintenance ***16***

Cleaning Your Appliance *16*

Power Failure *16*

Vacation *16*

Moving Your Appliance *16*

Energy-Saving Tips *16*

Troubleshooting ***17-18***

Limited Warranty ***19***

APPLIANCE SAFETY

Your safety and the safety of others are very important.

We have provided many important safety messages in this manual and on your appliance. Always read and obey all safety messages.

This is the Safety Alert Symbol. The symbol alerts you to potential hazards that can kill or injure you and others. All safety messages will follow the Safety Alert Symbol and either the word DANGER or WARNING.

DANGER

DANGER means that failure to heed this safety statement may result in severe personal injury or death.

WARNING

WARNING means that failure to heed this safety statement may result in extensive product damage, serious personal injury, or death.

All safety messages will alert you about the potential hazard, tell you how to reduce the chance of injury, and let you know what can happen if the instructions are not followed.

IMPORTANT SAFEGUARDS

Before the appliance is used, it must be properly positioned and installed as described in this manual, so read the manual carefully. To reduce the risk of fire, electrical shock or injury when using the appliance, follow basic precautions, including the following:

DANGER

- Plug into a grounded 3-prong outlet, do not remove the grounding prong, do not use an adapter, and do not use an extension cord.
- Replace all panels before operating.
- It is recommended that a separate circuit serving only your appliance be provided. Use receptacles that cannot be turned off by a switch or pull chain.
- **WARNING:** Never clean appliance parts with flammable fluids. These fumes can create a fire hazard or explosion. And do not store or use gasoline or other flammable vapors and liquids or explosive substances such as aerosol cans with a flammable propellant in this appliance or in the vicinity of this or any other appliance. The fumes can create a fire hazard or explosion.
- Do not connect or disconnect the electric plug when your hands are wet.
- Unplug the appliance or disconnect the power before cleaning or servicing. Failure to do so can result in electrical shock or death.
- Do not attempt to repair or replace any part of your appliance unless it is specifically recommended in this manual. All other servicing should be referred to a qualified technician.
- If the power cord is damaged, it must be replaced by the manufacturer, its service agent or similar qualified person in order to avoid a hazard.

A3 Warning: Risk of Fire / Flammable Materials. R600a

- This appliance is CFC- and HFC-free and contains small quantities of Isobutane (R600a) which is environmentally friendly, but flammable. It does not damage the ozone layer, nor does it increase the greenhouse effect. Care must be taken during transportation and setting up of the appliance so that no parts of the cooling system are damaged. Leaking coolant can ignite and may damage the eyes.
- In the event of any damage:
    - Avoid open flames and anything which creates a spark.
    - Disconnect from the power supply,
    - Air the room in which the appliance is located for several minutes and contact the Service Department for advice.
- The more coolant there is in an appliance, the larger the room it should be installed in. In the event of a leakage, if the appliance is in a small room, there is the danger of combustible gases building up. For every ounce of coolant, at least 325 cubic feet of room space is required. The amount of coolant in the appliance is stated on the data plate inside the appliance. It is hazardous for anyone other than an Authorized Service Person to carry out servicing or repairs to this appliance.
- Take serious care when handling, moving, and using the appliance to avoid either damaging the refrigerant tubing or increasing the risk of a leak.
- Replacing component parts and servicing shall be done by factory-authorized service personnel, so as to minimize the risk of possible ignition due to incorrect parts or improper service.
- This appliance is not intended for use by persons (including children) with reduced physical, sensory or mental capabilities, or lack of experience and knowledge, unless they have been given supervision or instruction concerning use of the appliance by a person responsible for their safety.
- Children should be supervised to ensure that they do not play with the appliance.

⚠ WARNING

FOLLOW THE WARNING CALLOUTS BELOW ONLY WHEN APPLICABLE TO YOUR MODEL

- Use two or more people to move and install the appliance. Failure to do so can result in back or other injuries.
- **WARNING:** Keep ventilation openings, in the appliance enclosure or in the built-in structure, clear of obstruction.
- **WARNING:** Do not use mechanical devices or other means to accelerate the defrosting process or to clean, other than those recommended by the manufacturer.
- **WARNING:** The appliance shall be stored in a room without continuously operating ignition sources (for example: open flames, an operating gas appliance or an operating electric heater.
- **WARNING:** Do not pierce or burn. Do not damage the refrigerant circuit.
- **WARNING:** Be aware that refrigerants may not contain an odor.
- **WARNING:** Do not use electrical appliances inside the food storage compartments of the appliance, unless they are of the type recommended by the manufacturer.
- **WARNING:** To avoid a hazard due to instability of the appliance, it must be fixed in accordance with the instructions.
- **WARNING:** When positioning the appliance, ensure the supply cord is not trapped or damaged.
- **WARNING:** Do not locate multiple portable socket-outlets or portable power supplies at the rear of the appliance.
- **WARNING:** Danger of injury from LED lamp. If the cover is defective: do not look directly into the illumination with optical lenses from close proximity. The eyes can be injured.
- **CAUTION:** Use this appliance only for its intended purpose. This equipment is intended for the storage and display of packaged products only.
- To ensure proper ventilation for your appliance, the front of the unit must be completely unobstructed. Choose a well-ventilated area with temperatures above 44°F (7°C) and below 90°F (32°C).
- The appliance should not be located next to ovens, grills, or other sources of high heat.
- The appliance must be installed with all electrical, water, and drain connections in accordance with state and local codes. A standard electrical supply (115 V AC only, 60 Hz), properly grounded in accordance with the National Electrical Code and local codes and ordinances, is required.
- Do not kink or pinch the power supply cord of the appliance. The size of the fuse (or circuit breaker)

should be 15 amperes.

- It is important that the appliance be leveled in order to work properly. You may need to make several adjustments to level it.
- All installations must be in accordance with local plumbing code requirements.
- Make certain that the pipes are not pinched, kinked, or damaged during installation.
- Check for leaks after connection.
- Never allow children to operate, play with or crawl inside the appliance.
- Do not use solvent-based cleaning agents or abrasives on the interior. These cleaners may damage or discolor the interior.
- Use this appliance only for its intended purpose as described in this *Instruction Manual*.
- Keep fingers out of the "pinch point" areas. Clearances between the door and cabinet are necessarily small. Be careful closing the door when children are in the area.
- This appliance is intended to be used in household and similar applications such as:
    - staff kitchen areas in shops, offices and other working environments
    - farmhouses and by clients in hotels, motels, and other residential type of environments
    - bed and breakfast type environments
    - catering and similar non-retail applications

- SAVE THESE INSTRUCTIONS -

DISPOSAL

Dispose of your appliance packaging properly. Ensure that any plastic wrappings, bags, etc., are disposed of safely and kept out of the reach of babies and young children. **Danger of suffocation!**

Refrigeration equipment must be properly disposed of in a professional and appropriate way, in accordance with the current local regulations and laws which protect the environment. This applies to your old appliance and to your new unit once it has reached the end of its service life.
WARNING: Please ensure that old, worn appliances are rendered unusable before disposal by removing the doors, removing the plug, cutting the network cable, and removing or destroying any snap fastenings or bolts. Leave shelving in place. You will thus prevent children from locking themselves in the appliance during play (risk of suffocation) or endangering their lives in any other way. DO NOT dispose of the appliance in landfill as the insulation (Cyclopentane) and refrigerant gas (R600a) contained in these appliances are flammable.

Disposal instructions:

- The appliance must not be disposed of in the dustbin or with normal household rubbish.
- The coolant circuit, particularly the heat exchanger at the back/bottom of the unit, must not be damaged.
- The appliance is not to be handled as normal household waste but is to be taken to a recycling collection point for electrical and electronic goods. By correctly disposing of this product, you are contributing to the protection of the environment and to the health of your fellow human beings. Improper disposal endangers health and the environment. Further information about the recycling of the product may be obtained from your town hall, refuse collection department or the store where you purchased the product.

⚠ DANGER ⚠

Risk of child entrapment!

Child entrapment and suffocation are not problems of the past. Junked or abandoned appliances are still dangerous, even if they will "just sit for a few days."

Before you throw away your old refrigerator or freezer:

- *Take off the doors*
- *Leave the shelves in place so that children may not easily climb inside.*

Electrical Connection

⚠ WARNING

Improper use of the grounded plug can result in the risk of electrical shock. If the power cord is damaged, have it replaced by a qualified electrician or an authorized service center.

This appliance should be properly grounded for your safety. The power cord of this appliance is equipped with a three-prong plug which mates with standard three-prong wall outlets to minimize the possibility of electrical shock.
Do not under any circumstances cut or remove the third (grounded) prong from the power cord supplied. For personal safety, this appliance must be properly grounded. Any questions concerning power and/or grounding should be directed toward a certified electrician or an authorized service center.
This appliance requires a standard 115/120 Volt AC ~ 60Hz three-prong grounded electrical outlet. Have the wall outlet and circuit checked by a qualified electrician to make sure the outlet is properly grounded. When a standard 2-prong wall outlet is encountered, it is your responsibility and obligation to have it replaced with a properly grounded 3-prong wall outlet.
To prevent accidental injury, the cord should be secured behind the appliance and not left exposed or dangling.

The appliance should always be plugged into its own individual electrical outlet which has a voltage rating that matches the rating label on the appliance. This provides the best performance and also prevents overloading house wiring circuits that could cause a fire hazard from overheating. Never unplug the appliance by pulling on the power cord. Always grip the plug firmly and pull it straight out from the receptacle. Repair or replace immediately all power cords that have become frayed or otherwise damaged. Do not use a cord that shows cracks or abrasion damage along its length or at either end. When moving the appliance, be careful not to damage the power cord.

Extension Cord

Because of potential safety hazards under certain conditions, it is strongly recommended that you do not use an extension cord with this appliance. However, if you must use an extension cord, it is absolutely necessary that it be a UL/CUL-Listed, 3-wire grounding type appliance extension cord having a grounding type plug and outlet and that the electrical rating of the cord is 115 volts and at least 10 amperes.

LOCATION OF PARTS

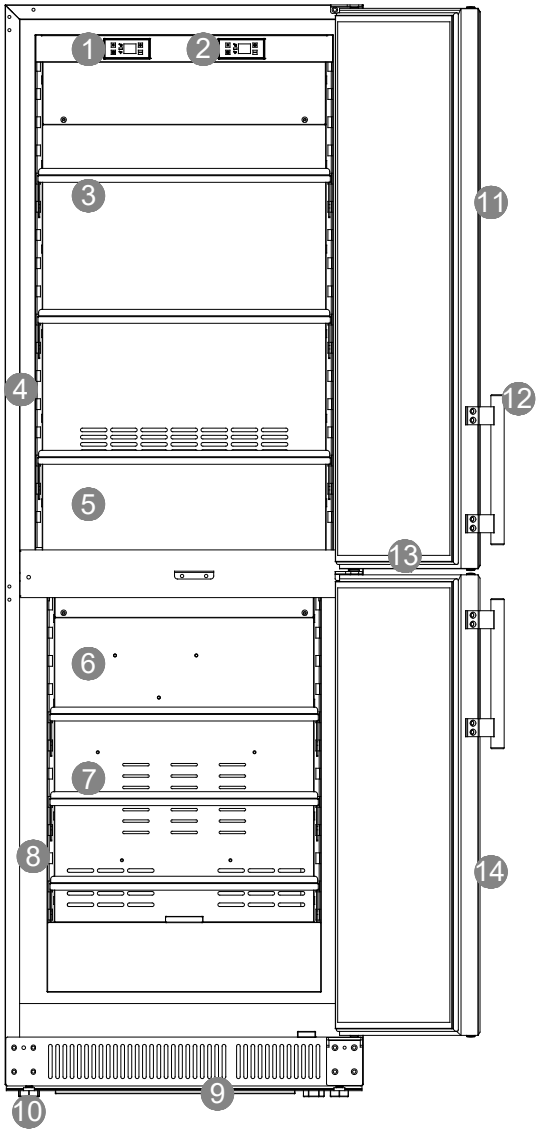

1. Refrigerator Control Unit
2. Freezer Control Unit
3. Refrigerator Shelves (3)
4. LED Side Light
5. Refrigerator Compartment
6. Freezer Compartment
7. Freezer Shelves (3)
8. LED Side Light
9. Toe-kick
10. Leveling Legs
11. Refrigerator Door
12. Handle
13. Security Lock
14. Freezer Door

*Maximum load for shelf: **22 lbs**. (10 kgs.)

INSTALLATION INSTRUCTIONS

Before Using your Appliance

- Remove the exterior and interior packing.

CAUTION: After unpacking you MUST allow this appliance to stand upright for at least 2 hours to allow the lubricant and refrigerant to drain back into the compressor and stabilize. Failure to do so may adversely affect performance and the lifetime of this unit.

- Clean the interior surface with lukewarm water using a soft cloth.
- Install the handle on the door. (See Installing the Stainless Steel Handle.)

Installation of your Appliance

CAUTION: This appliance is designed for storing and cooling fresh food, beverages, and drinks. Do not store perishable food, medicine, or other medical products.

- The appliance is designed for built-in, recessed, or free-standing installation for indoor or outdoor use.

NOTE: Do not store or install the appliance outdoors for models with indoor use only.

WARNING:
- Flammable Refrigerant Used. Appliance should be installed in accordance with the Safety Standard for Refrigeration Systems, ANSI/ASHRAE 15.
- This appliance must be installed in accordance with all local codes and ordinances.

- Place your appliance on a floor that is strong enough to support it when it is fully loaded. To level the unit, adjust the front leveling legs.
- For freestanding installation, leaving 5” (127mm) of space at the back and sides of the unit and 4“(102mm) at the top is suggested, which allows the proper air circulation to cool the compressor and condenser to save energy. For built-in installation, it is better to leave at least ¼" (5mm) of space on each side, 2" (50mm) at the back, and ⅛" (3mm) at the top to ensure proper service access and ventilation. And the air vent at the front of the appliance must never be covered or blocked in any way.

CAUTION: Make sure that the socket and ON/OFF switch are easily accessible after the appliance has been installed.

- Avoid locating the unit in moist areas.
- Plug the appliance into an exclusive, properly grounded wall outlet. Do not under any circumstances cut or remove the third (ground) prong from the power cord. Any questions concerning power and/or grounding should be directed toward a certified electrician or an authorized service center.

NOTE: It is recommended that you do not install the appliance near an oven, radiator, or other heating sources. Direct sunlight may affect the acrylic coating and heat sources may increase electrical consumption. Do not install in a location where the temperature will fall below 60°F (16°C). For best performance, do not install the appliance behind a cabinet door or block the base grille.

Built-in Instructions

For built-in or recessed installation, make sure your installation does not block the front/top ventilation grilles. Air at the back of the unit gets warm. The appliance housing unit must therefore be constructed to allow sufficient space for ventilation. The ventilation cross-sections in the plinth, housing unit and above the appliance must each provide an unobstructed airflow of at least 200 cm^2 to ensure that air can circulate without hindrance. The ventilation gap at the top of the appliance can be constructed above a top box or in a top box through a ventilation grille at the front.

NOTE: When pushing the appliance into the niche, make sure that the mains cable does not get trapped. Confirm that the door can open and close properly in the selected location.

a. (Inch/mm)	b. (Inch/mm)	c. (Inch/mm)
71 11/16" /1820	22⅝" / 575	23 ½" / 595
A. (Inch/mm)	B. (Inch/mm)	C. (Inch/mm)
71 ⅞" / 1825	24" / 610	23⅝" / 600

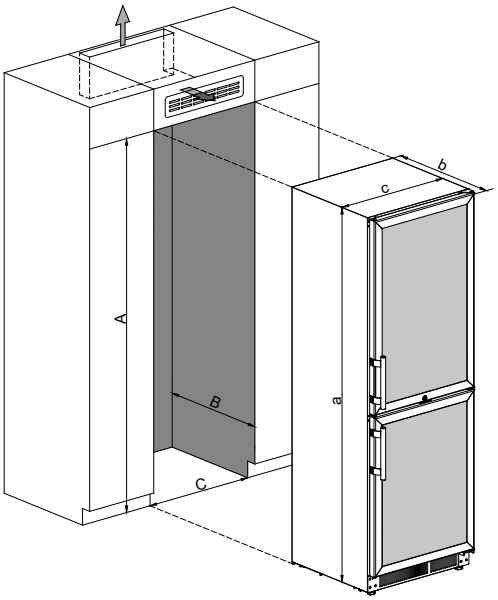

Securing the Appliance

Pop out the cover cap on the opposite side of the hinge and secure the appliance in the niche by tightening the screws through the attachment bracket.

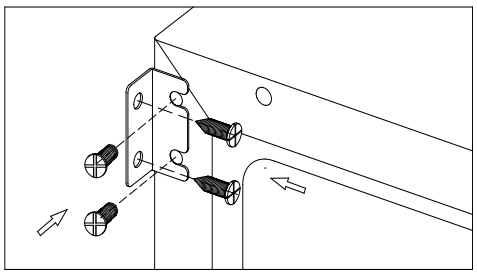

Reversing the Door Swing of your Appliance

This unit has the capability of the door opening from either the left or right side. The unit is delivered to you with the door opening from the left side. Should you desire to reverse the opening direction, please follow the reversal instructions shown below.

NOTE:
- All parts removed must be saved to allow the door swing to be reversed.
- Some variations of these items may only be reversible in Summit facilities before being shipped. Consult our website for more information.

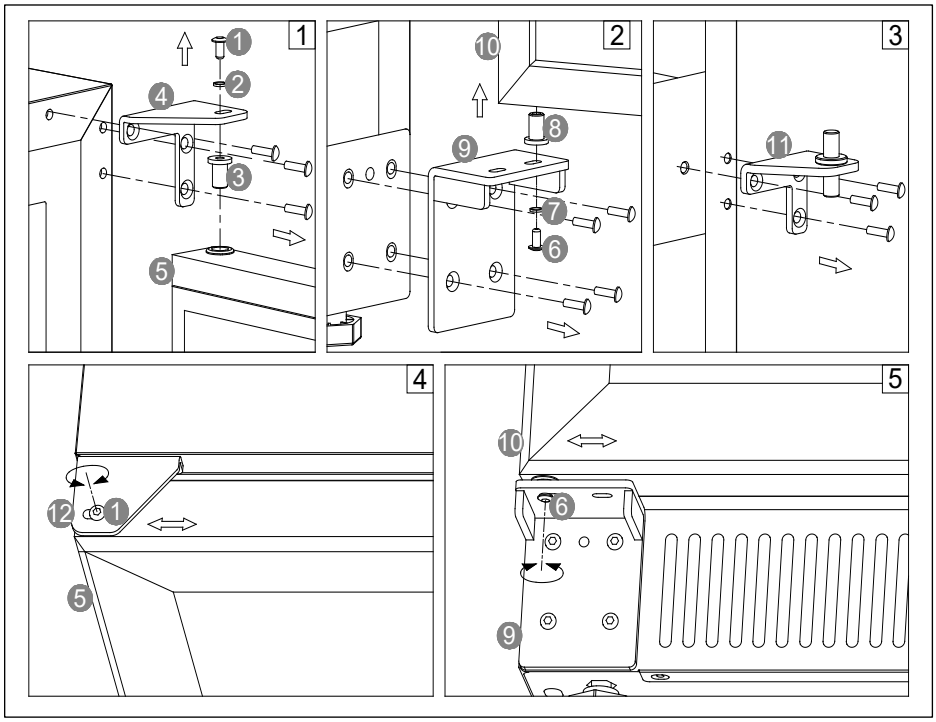

1. Unscrew the bolt (1) and lock washer (2) then gently lift and slide the upper door (5) outward to release it. Be careful to hold the door firmly after removing the bolt. (Fig. 1)
2. Gently lift up to remove the upper door from the middle hinge and place it on a padded surface to avoid the risk of damage. Then remove the right top hinge (4). (Fig. 1)
3. Transfer the upper door pin (3) to the opposite left position of door. (Fig. 1) At the same time Pop out the cover caps on the left side of the cabinet and use them to cover the screw holes on the right-hand side.
4. Screw the alternative left top hinge, included in the fittings, on the left side of cabinet.
5. Unscrew the bolt (6) and lock washer (7) then gently lift and slide the lower door (10) outward to release it. Be careful to hold the door firmly after removing the bolt. (Fig. 2)
6. Gently pull down to remove the lower door from the middle hinge and place it on a padded surface to avoid the risk of damage. Then unscrew and exchange the right bottom hinge (9) and the four screws to the opposite of cabinet. (Fig. 2)
7. Transfer the lower door pin (8) to the opposite left position of door. (Fig. 2)
8. Unscrew the right middle hinge (11) and transfer the left holes plugs to the opposite right side of cabinet. (Fig. 3)
9. Screw the alternative left middle hinge, included in the fittings, on the left side of cabinet.
10. Relocate the upper door to the left designated position. Lower and slide the door inward from the right, then position the door pin (3) in line with the left top hinge and screw in the bolt (1) and lock washer (2). (Fig. 4)
11. Recheck and adjust the door alignment by loosening the bolt (1) and moving the door. Tighten the bolt (1) after the door is levelled. (Fig. 4)
12. Relocate the lower door to the left designated position. Lift and slide the door inward from the right, then position the door pin (8) in line with the bottom hinge and screw in the bolt (6) and lock washer (7). (Fig. 5)
13. Recheck and adjust the door alignment by loosening the bolt (6) and moving the door. Tighten the bolt (6) after the door is levelled. (Fig. 5)
14. Transfer the handle & plugs to the opposite position.

Installing the Stainless Steel Handle

This appliance includes a stainless steel handle that is not required to operate the unit. To install the handle, follow the instructions below:

Use a screwdriver to remove the screws on the side of the door where the handle is to be installed.
Align the handle with the screws removed in above step.
Tighten the screws using a Phillips head screwdriver until the handle is both flush and secured tightly against the door side. (DO NOT over-tighten as this will cause damage to the door surface).

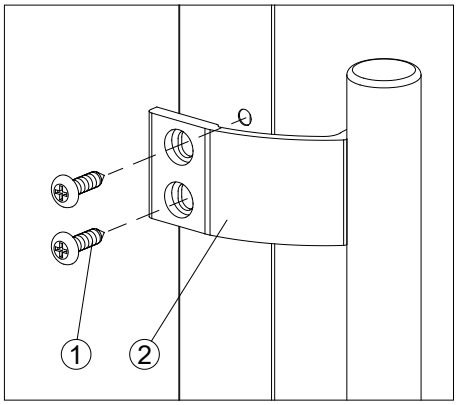

OPERATING YOUR APPLIANCE

It is recommended you install the appliance in a place where the ambient temperature is between 44ºF and 90ºF (7ºC to 32ºC). If the ambient temperature is above or below the recommended temperatures, the performance of the unit may be affected. For example, placing your unit in extremely cold or hot conditions may cause interior temperatures to fluctuate. The optimal temperature range may not be reached.

NOTE: Control panels may vary by model. Please compare the design of the control panel shown on the following pages with your unit to find the corresponding instructions for your specific model.

The appliance has two control and operating units. The refrigerator control unit controls the upper refrigerator compartment. The freezer control unit controls the lower freezer compartment.

Control Panel

Control Unit for Refrigerator Compartment

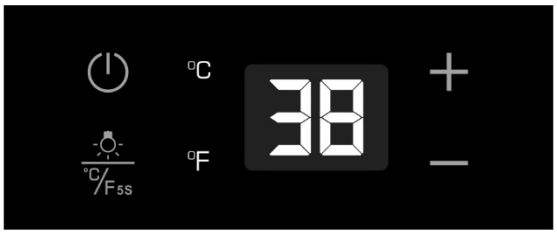

ON/OFF Power ⏻

To turn the appliance off, press and hold the ⏻ key for 5 seconds until the temperature display goes off. To turn the appliance on, press and hold the ⏻ key for 1 second until the temperature display lights up.

NOTE: Pressing the **POWER** key once can switch off the audible alarm when the alarm is on.

UP +

Used to increase (warm) the set temperature by 1°F/1ºC.

To switch on the Silent mode, press and hold the **UP** key for 5 seconds. Three beeps will confirm the selection.

DOWN —

Used to decrease (cool) the set temperature by 1°F/1ºC.

To switch on the Dynamic Cooling mode, press and hold the **DOWN** key for about 5 seconds. Five beeps will confirm the selection.

Light ☼

The interior light makes it easy to view your items. Pressing the **LIGHT** symbol toggles between 2 modes of operation for the internal lights: functional (default) mode and showcase mode. If you are in functional (default) mode, the lights will turn on only when the door is open. If you are in showcase mode, the lights will be on whether or not the door is open.

ºF/ºC Selector

Select the temperature display in Fahrenheit or Celsius degrees. To change the temperature from Fahrenheit to Celsius or from Celsius to Fahrenheit, press and hold the **LIGHT** key for 5 seconds.

Setting the Temperature Control

- You can set the temperature by pressing the **UP** and **DOWN** symbols. When you press either of the two buttons for the first time, the LED readout will show the original temperature set previously. (The temperature preset at the factory is 38°F, or 3°C).
- The temperature you are setting will increase by one degree each time you press the **UP** symbol and will decrease by one degree each time you press the **DOWN** symbol.
- The range of the temperature control is from 36°F to 43°F.
- To view the set temperature at any time, press the **UP** or **DOWN** symbol. The set temperature will flash in the display window for 5 seconds. After 5 seconds, the temperature inside the unit will reappear in the display window.

Control Unit for Freezer Compartment

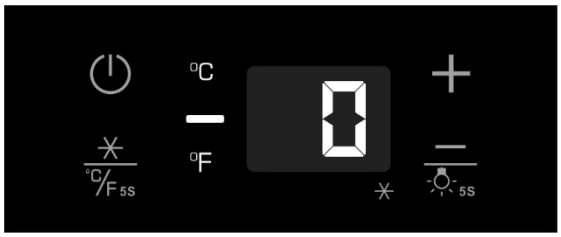

ON/OFF Power ⏻

To turn the appliance off, press and hold the ⏻ key for 5 seconds until the temperature display goes off. To turn the appliance on, press and hold the ⏻ key for 1 second until the temperature display lights up.

NOTE: Pressing the **POWER** key once can switch off the audible alarm when the alarm is on.

SuperFreeze ✳

SuperFreeze is used to freeze fresh food quickly. The function overrides the thermostat control and will make the compressor operate continuously. It is not necessary to adjust the thermostat setting when using this function. When the function is selected, the SuperFreeze indicator (dot at the bottom right of the display) will be ON. The function can be canceled by pressing the key again and the indicator will turn OFF. SuperFreeze will turn off automatically after 8 hours.

UP +

Used to increase (warm) the set temperature by 1°F/1ºC.

DOWN —

Used to decrease (cool) the set temperature by 1°F/1ºC.

ºF/ºC Selector

Select the temperature display setting in Fahrenheit or Celsius degree. To change the temperature from Fahrenheit to Celsius or from Celsius to Fahrenheit, press and hold the **SUPERFREEZE** key for 5 seconds.

Setting the Temperature Control

- You can set the temperature by pressing the **UP** and **DOWN** keys. When you press either of the two keys for the first time, the LED readout will show the original temperature set previously. (The temperature preset at the factory is **0°F** / -18°C.)
- The temperature you are setting will increase by one degree each time you press the **UP** key and will decrease by one degree each time you press the **DOWN** key.
- The range of the temperature control is from **-11°F** to **11°F**.
- To view the set temperature at any time, press the **UP** or **DOWN** key. The set temperature will flash in the display window for 5 seconds. After 5 seconds, the temperature inside the unit will reappear in the display window.

Interior Light

The interior LED light makes it easy to see items stored inside. Press and hold the **DOWN** key for 5 seconds to toggle between the two lighting modes, Functional (default) and Showcase.

- **Functional Mode**, the interior lights turn on only when the door is open and will automatically turn off about 5 seconds after the door is closed.
- **Showcase Mode**, the lights remain on continuously, regardless of whether the door is open or closed.

The interior LED lights are designed for long life and are not user replaceable. For replacement assistance, please contact our service department.

NOTE: Only use the original LED light fittings provided by the manufacturer.

Sabbath Mode

Sabbath mode is available for the observance of certain religious holidays. This mode turns off the displays, interior light, and audible alarms and prevents them from turning on again. Normal cooling operations will still take place.
To initiate Sabbath mode, press the **POWER** and **LIGHT** or **SUPERFREEZE** keys at the same time for at least 5 seconds. The temperature display will go out to confirm that the Sabbath mode is **ON**.
Sabbath mode can be canceled by repeating the above process. The Sabbath Mode will automatically turn off after 96 hours.

Temperature Memory Function

In the event of a power interruption (power surge, breaker switch, etc.), the unit can remember the previous temperature settings, and when the power is recovered, the cabinet temperature will return to the same setting temperature as before the power went off.

Defrosting

- The unit defrosts automatically in normal operating conditions.
- The evaporator behind the rear wall of the unit defrosts automatically. The condensate collects in the drainage channel behind the rear wall of the unit and flows through the drainage hole into the drip tray by/above the compressor where it evaporates.
- However, frost may accumulate on the evaporator if the unit is repeatedly opened in a high heat or high humidity location. If this frost pattern does not clear within 24 hours, your unit will require manual defrosting.

Using the Freezer

- This freezer is suitable for long-term storage of frozen materials, including food products and certain commercial or medical items such as select enzymes, reagents, samples, and other clinical materials.
- Storage duration depends on the type of product being stored. Always follow the recommended shelf life or stability guidelines provided by the product manufacturer or governing regulations.
- Pre-packaged commercially frozen food should be stored in accordance with the frozen foods manufacturer's instructions for a three-star frozen food storage compartment or home freezer.
- Transfer items into the freezer promptly after receiving them. When product packaging includes specific handling or storage time instructions, ensure these are followed carefully.

Temperature Alarm / Door Alarm

- An audible alarm sounds if the storage temperature is not cold enough. The temperature display flashes at the same time.
- The cause of the temperature being too high may be:
  - Warm fresh food was placed inside
  - Too much warm ambient air flowed in when rearranging and removing food
  - Power failure for some time
  - The appliance is faulty
- The audible alarm is automatically silenced, and the temperature display stops flashing when the temperature is sufficiently cold again.
- If the door has been left open for more than 60 seconds, the alarm will sound. Pressing the **POWER** key once can switch off the audible alarm.

Door Lock

Your unit is provided with a lock and key combination.

The keys are located inside the plastic bag that contains the *Instruction Manual*. Insert the key into the lock and turn it counterclockwise to unlock the door. To lock the door, do the reverse operation, making sure the metal pin is engaged completely. Remove the key and put it in a secure place for safekeeping.

Shelves

Any of the shelves can be removed to store larger items.

- When removing the shelf, make sure to have the door all the way open and remove all items first. Hold the front of the shelf, and then gently lift up and move out toward you.
- In order to replace the shelf, hold the shelf at an angle so the front is higher than the back, and then insert the top hook into the notch of clip-in strip. Then, lower the shelf and insert the bottom shelf hook into the notch of clip-in strip.

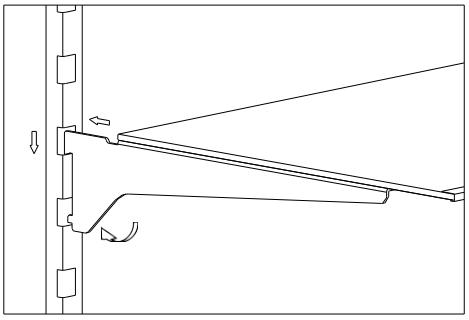

CAUTION: When removing or replacing the shelf, use caution not to scratch the sides of the unit.

CARE AND MAINTENANCE

Cleaning your Appliance

- Turn off the power, unplug the appliance, and remove all items, including shelves.
- Wash the inside surfaces with a solution of warm water and baking soda (about 2 tablespoons of baking soda to a quart of water).
- Wash the shelves with a mild detergent solution.
- Wring excess water out of the sponge or cloth when cleaning the area where the controls are located, or any electrical parts.
- Wash the outside cabinet with warm water and mild liquid detergent. Rinse well and wipe dry with a clean, soft cloth.
- Use an approved stainless steel cleaner to clean the doors and handles. Do not use steel wool or a steel brush on the stainless steel.

CAUTION: Failure to unplug the appliance during cleaning could result in electrical shock or other personal injuries.

Power Failure

Most power failures are corrected within a few hours and should not affect the temperature of your appliance if you minimize the number of times the doors are opened. If the power is going to be off for a longer period of time, you need to take the proper steps to protect the contents.

Vacation

- **Short vacations:** Leave the appliance operating during vacations of less than three weeks.
- **Long vacations:** If the appliance will not be used for several months, remove all items and turn off the appliance. Clean and dry the interior thoroughly. To prevent odor and mold growth, leave the doors open slightly, blocking them open if necessary.

Moving your Appliance

1. Remove all items.
2. Securely tape down all loose items (shelves) inside the appliance.
3. Turn the adjustable legs up to the base to avoid damage.
4. Tape the doors shut.
5. Be sure the appliance stays secure in the upright position during transportation. Also, protect the outside of the appliance with a blanket or similar item.

Energy-Saving Tips

- The appliance should be located in the coolest area of the room or outdoor location, away from heat-producing appliances and out of direct sunlight.
- Ensure that the unit is adequately ventilated. Never cover air vents.
- Do not keep the doors open any longer than necessary.
- Let hot foods cool to room temperature before placing in the unit. Overloading the unit forces the compressor to run longer.
- Be sure to wrap foods properly, and wipe containers dry before placing them in the unit. This cuts down on frost build-up inside the unit.
- Unit shelves and storage bins should not be lined with aluminum foil, wax paper, or paper toweling. Liners interfere with cold air circulation, making the unit less efficient.
- Organize and label food to reduce door openings and extended searches. Remove as many items as needed at one time and close the door as soon as possible.

TROUBLESHOOTING

You can solve many common problems easily, saving you the cost of a possible service call. Try the suggestions below to see if you can solve the problem before calling the technical service.

PROBLEM	POSSIBLE CAUSE	REMEDY
Appliance does not operate.	*Appliance is not connected to a power supply.* *The appliance is turned off.* *Tripped circuit breaker or blown fuse*	*Connect the appliance.* *Switch on the appliance.* *Switch on circuit breaker or replace fuse.*
Appliance is not cold enough.	*The temperature is not set correctly.* *The ambient temperature could require a lower temperature setting.* *Drawers were opened too often.* *A drawer was not closed completely.* *Drawer is not hermetically sealed.* *The condenser is too dirty.* *The ventilation opening is blocked or too dusty.*	*Check the set temperature.* *Set a lower temperature.* *Do not open drawers more often than necessary.* *Close drawer properly.* *Check the seal and clean or replace.* *Clean the condenser when necessary.* *Clear the obstructions and clean off the dust.*
Appliance turns itself on and off frequently.	*The room temperature is higher than average.* *A large amount of food has been added to the unit.* *Drawers are opened too often.* *A drawer is not closed completely.* *A drawer gasket does not seal properly.*	*Put the appliance in a cooler place.* *Leave the appliance to work for a while until the set temperature has been reached.* *Do not open the drawers more often than necessary.* *Close drawer properly.* *Check the drawer seal and clean or replace it.*
The light does not work.	*Appliance is not connected to a power supply.* *Tripped circuit breaker or a blown fuse.* *The light was switched off on the control panel.*	*Connect the appliance.* *Switch on circuit breaker or replace fuse.* *Switch on the light.*
Vibrations	*The appliance is not properly leveled.*	*Level the appliance with the adjustable feet.*
The appliance seems to make too much noise.	*The rattling noise may come from the flow of the refrigerant, which is normal. As each cycle ends, you may hear gurgling sounds caused by the flow of refrigerant in your appliance.* *If temperature fluctuations occur, the contraction and expansion of the inner walls may cause popping and crackling noises.*	
	The appliance is not properly leveled.	*Level the appliance with the adjustable feet.*
	One or more of the following sounds is heard: *- Buzzing* *- Trickling water* *- Thud (clatter of ice)*	 *The water valve is operating.* *Water is entering the icemaker to fill cup.* *Ice is being dumped into the ice bin.*
Drawers will not close properly.	*The appliance is not properly leveled.* *The gaskets are dirty.* *The racks or bins are out of position.*	*Level the appliance with the adjustable feet.* *Clean the drawer gaskets.* *Check the racks and bins and refit correctly.*

Display "E0", "E1". "E2", "E3", "E4", "E5" or "E7".	*"E0" indicates a communication error for 3 zone models.* *"E1" or "E2" indicates that the air temperature sensor has failed.* *"E3" or "E4" indicates that the defrost sensor in the evaporator has failed.* *"E5" indicates defrost heater failure.* *"E7" indicates door switch failure.*	*Call for service.*
The alarm sounds and the temperature display flashes.	*Has a drawer been open for longer than 60 seconds? If not, then the temperature has risen higher or fallen lower than the temperature that has been set. This could be due to:* *The appliance drawers being opened too often.* *The ventilation opening being covered or too dusty.* *A lengthy interruption in the power supply.* *A large amount of food has been added to the unit.*	*If yes, close the drawer.* *Do not open drawers more often than necessary.* *Clear the obstructions and clean off the dust.* *Leave the appliance to work for a while until the set temperature has been reached.*
The icon "--" is lit and flashing in the temperature display.	*The display temperature is out of range.*	*Only temperatures within the range 16~99°F/-9~37°C for refrigerators and the range -99~99°F/-73~37°C for freezers can be displayed. If the temperature is not within this range, the icon "--" will be displayed instead. This is normal.*
Ice tastes stale.	*The ice is old.*	*Make a new batch.*
Water in icemaker overflows	*Refrigerator or icemaker is not level.* *If the icemaker still overflows after leveling.*	*Level the appliance with the adjustable feet. Water pressure must be 20-80 psi.* *Turn off the icemaker's water supply at the shut-off valve and raise the icemaker's bail arm to the "off" position (see previous page); then contact your local service center.*
Not enough ice.	*It will take 48 hours to fill the ice bucket. The icemaker will make ice every 2 to 3 hours.*	*For more ice, adjust the freezer control to a colder setting.*
Ice making has stopped.	*Be sure that the bail arm is lowered to its ON position. Make sure that the water shut-off valve is open. The water shut-off valve or the water valve screen is clogged.*	*Contact your local service center.*

If you have checked the information above and you still need help with your appliance, call our Customer Service facility at **800-932-4267** (Ext. **513**) between 9:00 AM and 5:00 PM ET or visit our website **summitappliance.com/support** at any time. We will do our best to answer your questions.

To order replacement parts, visit our website: **summitapplianceparts.com**

LIMITED WARRANTY

ONE-YEAR LIMITED WARRANTY

Warranty coverage is available within the 48 contiguous United States, along with select areas of Alaska, Hawaii, and Canada. For locations not covered, consumers can either contact a local provider or coordinate with Felix Storch, Inc. to find nearby service options, which may qualify for partial reimbursement.

The warranty for this appliance is valid for one year from the date of purchase, provided the appliance is operated and maintained according to the instructions included with the product. The warrantor will cover the cost of factory-specified parts and repair labor needed to correct defects in materials or workmanship. Service must be performed by a designated service company.

All parts, except the compressor, are warranted for one year against manufacturing defects. Plastic parts, shelves, and cabinets are produced to commercially acceptable standards but are not covered for damages incurred during handling or for breakage.

5-YEAR COMPRESSOR WARRANTY

1. The compressor is covered for 5 years.
2. Replacement does not include labor.

ITEMS WARRANTOR WILL NOT PAY FOR:

1. Service calls to correct the installation of your appliance, to instruct you how to use your appliance, to replace or repair fuses or to correct wiring or plumbing.
2. Service calls to repair or replace appliance light bulbs or broken shelves. Consumable parts (such as filters) are excluded from warranty coverage.
3. Damage resulting from accident, alteration, misuse, abuse, fire, flood, acts of God, improper installation, installation not in accordance with electrical or plumbing codes, or use of products not approved by warrantor.
4. Replacement parts or repair labor costs for units operated outside the 48 contiguous United States, along with select areas of Alaska, Hawaii, and Canada.
5. Repairs to parts or systems resulting from unauthorized modifications made to the appliance.
6. Expenses for travel and transportation for product service in remote locations.
7. The removal and reinstallation of your appliance if it is installed in an inaccessible location or is not installed in accordance with published installation instructions.

DISCLAIMER OF IMPLIED WARRANTIES; LIMITATION OF REMEDIES

CUSTOMER'S SOLE AND EXCLUSIVE REMEDY UNDER THIS LIMITED WARRANTY SHALL BE PRODUCT REPAIR AS PROVIDED HEREIN. IMPLIED WARRANTIES, INCLUDING WARRANTIES OF MERCHANTABILITY OR FITNESS FOR A PARTICULAR PURPOSE, ARE LIMITED TO ONE YEAR. WARRANTOR SHALL NOT BE LIABLE FOR INCIDENTAL OR CONSEQUENTIAL DAMAGES. SOME STATES DO NOT ALLOW THE EXCLUSION OR LIMITATION OF INCIDENTAL OR CONSEQUENTIAL DAMAGES, OR LIMITATIONS ON THE DURATION OF IMPLIED WARRANTIES OF MERCHANTABILITY OR FITNESS, SO THESE EXCLUSIONS OR LIMITATIONS MAY NOT APPLY TO YOU. THIS WARRANTY GIVES YOU SPECIFIC LEGAL RIGHTS AND YOU MAY ALSO HAVE OTHER RIGHTS, WHICH VARY FROM STATE TO STATE.

CALIFORNIA CARB/SNAP DISCLOSURE

This product uses eco-friendly hydrocarbon refrigerant and fully complies with California CARB regulations. However, we are required by California Law to provide the following disclosure statement in every product sold in California.

"This equipment is prohibited from use in California with any refrigerants on the 'List of Prohibited Substances' for that specific end-use, in accordance with California Code of Regulations, title 17, section 95374. This disclosure statement has been reviewed and approved by Felix Storch, Inc. and Felix Storch, Inc. attests, under penalty of perjury, that these statements are true and accurate."

WARNING: This product can expose you to chemicals including Nickel (Metallic) which is known to the State of California to cause cancer.

For more information go to www.P65Warnings.ca.gov

Note: Nickel is a component in all stainless steel and some other metallic compositions.

Felix Storch, Inc.
An ISO 9001:2015 registered company
770 Garrison Ave
Bronx, New York 10474
www.summitappliance.com

Revised: 2026-08-02