Form No. 3460-572 Rev A

TORO®

Count on it.

Operator's Manual

Grapple Rake

Compact Tool Carriers

Model No. 22577—Serial No. 319000001 and Up

Register at www.Toro.com.
Original Instructions (EN)

CE UK CA

3460-572

This product complies with all relevant European directives. For details, please see the Declaration of Incorporation (DOI) at the back of this publication

⚠ WARNING

CALIFORNIA
Proposition 65 Warning

Use of this product may cause exposure to chemicals known to the State of California to cause cancer, birth defects, or other reproductive harm.

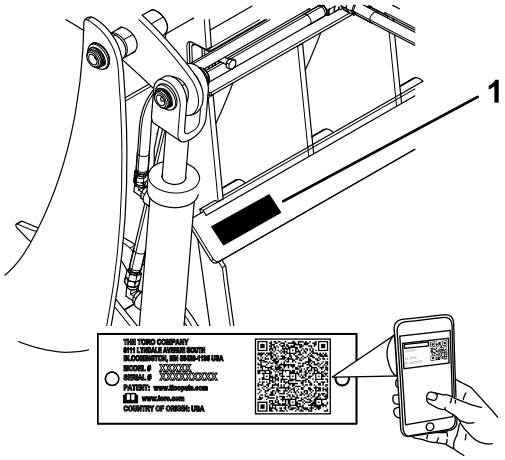

g293601

Figure 1

Introduction

This grapple rake is intended to be used on a Toro compact tool carrier. It is designed primarily for grabbing, dragging, lifting, and removing materials without picking up topsoil on residential or commercial properties. It is not designed for use on non-Toro traction units.

Read this information carefully to learn how to operate and maintain your product properly and to avoid injury and product damage. You are responsible for operating the product properly and safely.

Visit www.Toro.com for product safety and operation training materials, accessory information, help finding a dealer, or to register your product.

Whenever you need service, genuine Toro parts, or additional information, contact an Authorized Service Dealer or Toro Customer Service and have the model and serial numbers of your product ready. The model and serial numbers are located on a plate on the attachment frame, in front of the mount plate. Write the numbers in the space provided.

Important: **With your mobile device, you can scan the QR code on the serial number decal (if equipped) to access warranty, parts, and other product information.**

Model No. _____

Serial No. _____

This manual identifies potential hazards and has safety messages identified by the safety-alert symbol (Figure 2), which signals a hazard that may cause serious injury or death if you do not follow the recommended precautions.



g000502

Figure 2

1. Safety-alert symbol

© 2022—The Toro® Company
8111 Lyndale Avenue South
Bloomington, MN 55420

Contact us at www.Toro.com.
Printed in the USA
All Rights Reserved

Contents

Safety 3
- General Safety 3
- Slope Safety 4
- Grapple Safety 4
- Maintenance and Storage Safety 4
- Safety and Instructional Decals 5

Product Overview 5
- Specifications 5

Operation 6
- Installing and Removing the Attachment 6
- Lifting Objects 6
- Digging/Raking with the Upper Jaw 6
- Digging with the Lower Jaw 7
- Transport Position 7

Maintenance 8
- Recommended Maintenance Schedule(s) 8
- Greasing the Attachment 8
- Checking the Hydraulic Lines 8

Storage 9

Safety

⚠ DANGER

There may be buried utility lines in the work area. Digging into them may cause a shock or an explosion.

Have the property or work area marked for buried lines and do not dig in marked areas. Contact your local marking service or utility company to have the property marked (for example, in the US, call 811 or in Australia, call 1100 for the nationwide marking service).

General Safety

Always follow all safety instructions to avoid serious injury or death.

- Do not exceed the rated operating capacity, as the machine may become unstable, which may result in loss of control.
- **Do not transport an attachment with the arms raised or extended (if applicable)**. Always transport the attachment close to the ground; refer to Transport Position (page 7).
- Have the property or work area marked for buried lines and other objects, and do not dig in marked areas.
- Read and understand the content of this *Operator's Manual* before starting the machine.
- Use your full attention while operating the machine. Do not engage in any activity that causes distractions; otherwise, injury or property damage may occur.
- Never allow children or untrained people to operate the machine.
- Keep your hands and feet away from the moving components and attachments.
- Do not operate the machine without the guards and other safety protective devices in place and working on the machine.
- Keep bystanders and pets away from the machine.
- Stop the machine, shut off the machine, and remove the key before servicing, fueling, or unclogging the machine.

Improperly using or maintaining this machine can result in injury. To reduce the potential for injury, comply with these safety instructions and always pay attention to the safety-alert symbol ⚠, which means Caution, Warning, or Danger—personal safety instruction. Failure to comply with these instructions may result in personal injury or death.

Slope Safety

- **Operate the machine up and down slopes with the heavy end of the machine uphill.** Weight distribution changes with attachments. An empty load-bearing attachment makes the rear of the machine the heavy end, and a full load-bearing attachment makes the front of the machine the heavy end. Most other attachments make the front of machine the heavy end.
- Raising or extending (if applicable) the loader arms on a slope affects the stability of the machine. Keep the loader arms in the lowered and retracted position when on slopes.
- Slopes are a major factor related to loss of control and tip-over accidents, which can result in severe injury or death. **Operating the machine on any slope or uneven terrain requires extra caution.**
- Establish your own procedures and rules for operating on slopes. These procedures must include surveying the site to determine which slopes are safe for machine operation. Always use common sense and good judgment when performing this survey.
- Slow down and use extra care on hillsides. Ground conditions can affect the stability of the machine.
- Avoid starting or stopping on a slope. If the machine loses traction, proceed slowly, straight down the slope.
- Avoid turning on slopes. If you must turn, turn slowly and keep the heavy end of the machine uphill.
- Keep all movements on slopes slow and gradual. Do not make sudden changes in speed or direction.
- If you feel uneasy operating the machine on a slope, do not do it.
- Watch for holes, ruts, or bumps, as uneven terrain could overturn the machine. Tall grass can hide obstacles.
- Use caution when operating on wet surfaces. Reduced traction could cause sliding.
- Evaluate the area to ensure that the ground is stable enough to support the machine.
- Use caution when operating the machine near the following:
  - Drop-offs
  - Ditches
  - Embankments
  - Bodies of water

  The machine could suddenly roll over if a track goes over the edge or the edge caves in. Maintain a safe distance between the machine and any hazard.
- Do not remove or add attachments on a slope.
- Do not park the machine on a hillside or slope.

Grapple Safety

- For wheeled machines, use the counterweight on the platform while using the attachment.
- Always close the jaws of the attachment when not in use.
- Always grab and lift long items near the center.
- Do not ram piles with the jaws closed.
- Do not hook a chain on the jaws.
- Do not use the jaws for hooking and/or pulling. Clamp the material securely.
- Always lower the attachment and shut off the machine each time you leave the operating position.

Maintenance and Storage Safety

- Check fasteners at frequent intervals for proper tightness to ensure that the equipment is in safe operating condition.
- Refer to this *Operator's Manual* for important details if you store the attachment for an extended period of time.
- Maintain or replace safety and instruction labels, as necessary.

Safety and Instructional Decals

Safety decals and instructions are easily visible to the operator and are located near any area of potential danger. Replace any decal that is damaged or missing.



decal114-1281

114-1281

1. Warning; crushing hazard, grapple—keep bystanders away.



decal133-8061

133-8061

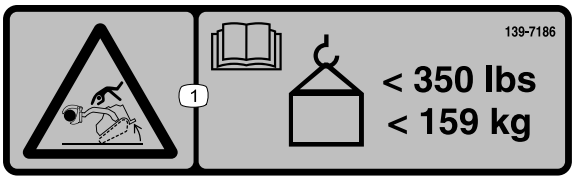

decal139-7186

139-7186

1. Tipping hazard—read the *Operator's Manual*; the load capacity is less than 159 kg (350 lb).

Product Overview

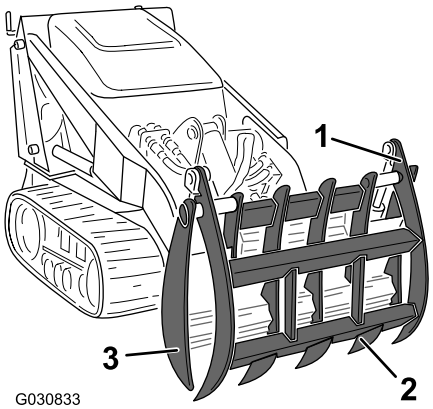

g030833

Figure 3

1. Upper jaw
2. Tooth
3. Lower jaw

Specifications

Note: Specifications and design are subject to change without notice.

Width	87.6 cm (35.5 inches)
Length	46 cm (18 inches)
Height	76 cm (30 inches)
Weight	120 kg (265 lb)

To ensure optimum performance, use only genuine Toro replacement parts and accessories. Replacement parts and accessories made by other manufacturers could be dangerous, and such use could void the product warranty.

Operation

Determine the left and right sides of the machine from the normal operating position.

Installing and Removing the Attachment

Refer to the *Operator's Manual* for the traction unit for the installation and removal procedure.

Important: **Before installing the attachment, position the machine on a level surface, ensure that the mount plates are free of any dirt or debris, and ensure that the pins rotate freely. If the pins do not rotate freely, grease them.**

Note: Always use the traction unit to lift and move the attachment.

⚠ WARNING

If you do not fully seat the quick-attach pins through the attachment mount plate, the attachment could fall off the machine, crushing you or bystanders.

Ensure that the quick-attach pins are fully seated in the attachment mount plate.

⚠ WARNING

Hydraulic fluid escaping under pressure can penetrate skin and cause injury. Fluid injected into the skin must be surgically removed within a few hours by a doctor familiar with this form of injury; otherwise, gangrene may result.

- **Ensure that all hydraulic-fluid hoses and lines are in good condition and all hydraulic connections and fittings are tight before applying pressure to the hydraulic system.**
- **Keep your body and hands away from pinhole leaks or nozzles that eject high-pressure hydraulic fluid.**
- **Use cardboard or paper to find hydraulic leaks; never use your hands.**

⚠ CAUTION

Hydraulic couplers, hydraulic lines/valves, and hydraulic fluid may be hot. If you contact hot components, you may be burned.

- **Wear gloves when disconnecting the hydraulic couplers.**
- **Allow the machine to cool before touching hydraulic components.**
- **Do not touch hydraulic fluid spills.**

Lifting Objects

Use the attachment to grab and lift heavy objects such as logs and rocks. Adjust the pressure on the auxiliary hydraulic controls to change grasping speed.

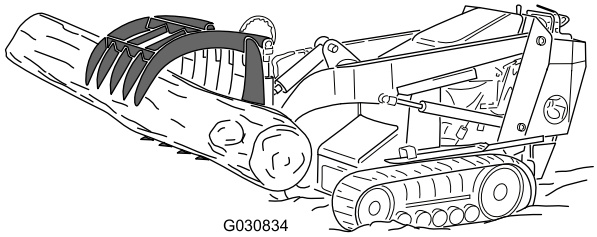

g030834

Figure 4

Important: **Grab objects from the center. Never lift more than the rated lift capacity of the attachment as listed on the decals. When transporting a load, keep it as close to the ground as possible.**

Important: **If you are lifting more delicate or hollow items, such as crates, close the jaws with care so as not to crush the item being moved.**

Digging/Raking with the Upper Jaw

1. Open the jaws all the way and tilt the attachment forward until the upper jaw teeth touch (or penetrate) the ground.
2. Drive the machine rearward. To rake up loose sticks and other debris, which you can then grab with the jaws, place the teeth on the ground. To dig furrows in the earth and break up the sod, penetrate the ground with the teeth.

   Note: You can also perform this operation with the jaws closed, because the upper teeth protrude through the lower jaw (Figure 5).

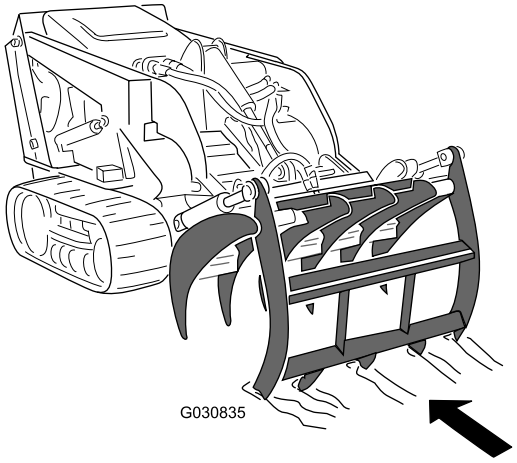

g030835

Figure 5

3. You can also use this method to rip out bushes. Place the upper jaw teeth into the ground on the far side of the bush and then close the jaws around the bush and roots, ripping the bush out of the ground.

Digging with the Lower Jaw

1. Open the jaws and lower the lower jaw teeth into the ground (Figure 6).
2. Drive the machine forward.

   Note: This digs furrows in the earth breaking up the sod and pushing any debris ahead of the attachment.

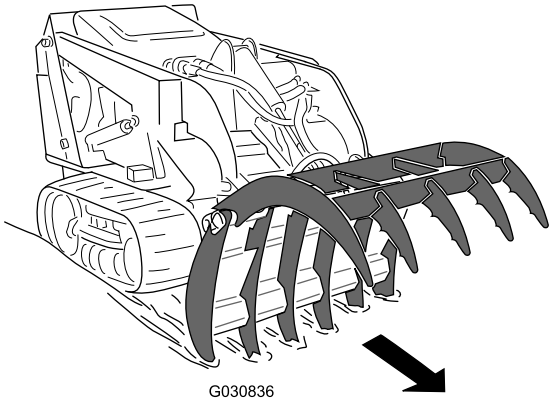

g030836

Figure 6

Transport Position

When transporting the grapple, keep it as close to the ground as possible, no more than 15 cm (6 inches) above the ground. Tilt the attachment rearward and keep the jaws closed.

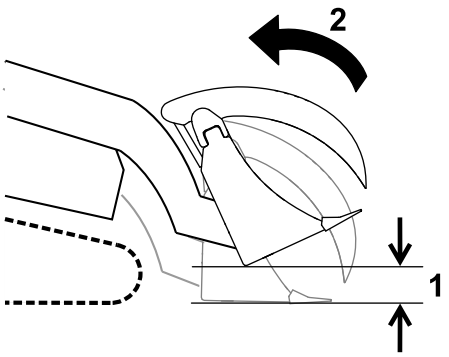

g270332

Figure 7

1. No more than 15 cm (6 inches) above the ground.
2. Tilt the attachment rearward.

Maintenance

Recommended Maintenance Schedule(s)

Maintenance Service Interval	Maintenance Procedure
Before each use or daily	• Grease the attachment (and immediately after every washing). • Check the hydraulic lines for leaks, loose fittings, kinked lines, loose mounting supports, wear, weather, and chemical deterioration.
Before storage	• Paint chipped surfaces.

⚠ CAUTION

If you leave the key in the switch, someone could accidently start the engine and seriously injure you or other bystanders.

Remove the key from the switch before you perform any maintenance.

Greasing the Attachment

Service Interval: Before each use or daily (and immediately after every washing).

Grease Type: General-purpose grease.

1. Park the machine on a level surface, lower the loader arms, and close the grapple jaws.
2. Shut off the engine and remove the key.
3. Clean the grease fittings with a rag.
4. Connect a grease gun to each fitting (Figure 8).

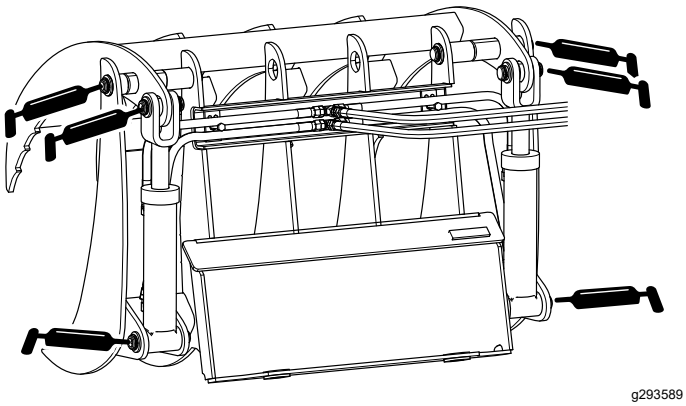

g293589

Figure 8

5. Pump grease into the fittings until grease begins to ooze out of the bearings (approximately 3 pumps).
6. Wipe up any excess grease.

Checking the Hydraulic Lines

Service Interval: Before each use or daily

⚠ WARNING

Hydraulic fluid escaping under pressure can penetrate skin and cause injury. Fluid injected into the skin must be surgically removed within a few hours by a doctor familiar with this form of injury; otherwise, gangrene may result.

- **Keep your body and hands away from pinhole leaks or nozzles that eject high-pressure hydraulic fluid.**
- **Use cardboard or paper to find hydraulic leaks; never use your hands.**

Storage

1. Before long term storage, wash the attachment with mild detergent and water to remove dirt and grime.
2. Check and tighten all bolts, nuts, and screws. Repair or replace any damaged or worn parts.
3. Paint all scratched or bare metal surfaces. Paint is available from your Authorized Service Dealer.
4. Store the attachment in a clean, dry garage or storage area. Cover it to protect it and keep it clean.

Notes:

Notes:

Declaration of Incorporation

The Toro Company, 8111 Lyndale Avenue South, Bloomington, MN, USA declares that the following unit(s) conform(s) to the directives listed, when installed in accordance with the accompanying instructions onto certain Toro models as indicated on the relevant Declarations of Conformity.

Model No.	Serial No.	Product Description	Invoice Description	General Description	Directive
22521	319000001 and Up	Grapple Rake, Compact Tool Carriers	GRAPPLE RAKE	Compact Utility Loader	2006/42/EC

Relevant technical documentation has been compiled as required per Part B of Annex VII of 2006/42/EC.

We will undertake to transmit, in response to requests by national authorities, relevant information on this partly completed machinery. The method of transmission shall be electronic transmittal.

This machinery shall not be put into service until incorporated into approved Toro models as indicated on the associated Declaration of Conformity and in accordance with all instructions, whereby it can be declared in conformity with all relevant Directives.

Certified:



Chad Moe
Sr. Engineering Manager
8111 Lyndale Ave. South
Bloomington, MN 55420, USA
November 21, 2022

Authorized Representative:

Marcel Dutrieux
Manager European Product Integrity
Toro Europe NV
Nijverheidsstraat 5
2260 Oevel
Belgium

UK Declaration of Incorporation

The Toro Company, 8111 Lyndale Avenue South, Bloomington, MN, USA declares that the following unit(s) conform(s) to the regulations listed, when installed in accordance with the accompanying instructions onto certain Toro models as indicated on the relevant Declarations of Conformity.

Model No.	Serial No.	Product Description	Invoice Description	General Description	Regulation
22521	319000001 and Up	Grapple Rake, Compact Tool Carriers	GRAPPLE RAKE	Compact Utility Loader	S.I. 2008/1597

Relevant technical documentation has been compiled as required per Schedule 10 of S.I. 2008 No. 1597.

We will undertake to transmit, in response to requests by national authorities, relevant information on this partly completed machinery. The method of transmission shall be electronic transmittal.

This machinery shall not be put into service until incorporated into approved Toro models as indicated on the associated Declaration of Conformity and in accordance with all instructions, whereby it can be declared in conformity with all relevant regulations.

This declaration has been issued under the sole responsibility of the manufacturer.
The object of the declaration is in conformity with relevant UK legislation.

Authorized Representative:

Marcel Dutrieux
Manager European Product Integrity
Toro U.K. Limited
Spellbrook Lane West
Bishop's Stortford
CM23 4BU
United Kingdom



Chad Moe
Sr. Engineering Manager
8111 Lyndale Ave. South
Bloomington, MN 55420, USA
November 21, 2022

EEA/UK Privacy Notice

Toro's Use of Your Personal Information

The Toro Company ("Toro") respects your privacy. When you purchase our products, we may collect certain personal information about you, either directly from you or through your local Toro company or dealer. Toro uses this information to fulfil contractual obligations - such as to register your warranty, process your warranty claim or to contact you in the event of a product recall - and for legitimate business purposes - such as to gauge customer satisfaction, improve our products or provide you with product information which may be of interest. Toro may share your information with our subsidiaries, affiliates, dealers or other business partners in connection these activities. We may also disclose personal information when required by law or in connection with the sale, purchase or merger of a business. We will never sell your personal information to any other company for marketing purposes.

Retention of your Personal Information

Toro will keep your personal information as long as it is relevant for the above purposes and in accordance with legal requirements. For more information about applicable retention periods please contact legal@toro.com.

Toro's Commitment to Security

Your personal information may be processed in the US or another country which may have less strict data protection laws than your country of residence. Whenever we transfer your information outside of your country of residence, we will take legally required steps to ensure that appropriate safeguards are in place to protect your information and to make sure it is treated securely.

Access and Correction

You may have the right to correct or review your personal data, or object to or restrict the processing of your data. To do so, please contact us by email at legal@toro.com. If you have concerns about the way in which Toro has handled your information, we encourage you to raise this directly with us. Please note that European residents have the right to complain to your Data Protection Authority.

California Proposition 65 Warning Information

What is this warning?

You may see a product for sale that has a warning label like the following:



WARNING: Cancer and Reproductive Harm—www.p65Warnings.ca.gov.

What is Prop 65?

Prop 65 applies to any company operating in California, selling products in California, or manufacturing products that may be sold in or brought into California. It mandates that the Governor of California maintain and publish a list of chemicals known to cause cancer, birth defects, and/or other reproductive harm. The list, which is updated annually, includes hundreds of chemicals found in many everyday items. The purpose of Prop 65 is to inform the public about exposure to these chemicals.

Prop 65 does not ban the sale of products containing these chemicals but instead requires warnings on any product, product packaging, or literature with the product. Moreover, a Prop 65 warning does not mean that a product is in violation of any product safety standards or requirements. In fact, the California government has clarified that a Prop 65 warning "is not the same as a regulatory decision that a product is 'safe' or 'unsafe.'" Many of these chemicals have been used in everyday products for years without documented harm. For more information, go to https://oag.ca.gov/prop65/faqs-view-all.

A Prop 65 warning means that a company has either (1) evaluated the exposure and has concluded that it exceeds the "no significant risk level"; or (2) has chosen to provide a warning based on its understanding about the presence of a listed chemical without attempting to evaluate the exposure.

Does this law apply everywhere?

Prop 65 warnings are required under California law only. These warnings are seen throughout California in a wide range of settings, including but not limited to restaurants, grocery stores, hotels, schools, and hospitals, and on a wide variety of products. Additionally, some online and mail order retailers provide Prop 65 warnings on their websites or in catalogs.

How do the California warnings compare to federal limits?

Prop 65 standards are often more stringent than federal and international standards. There are various substances that require a Prop 65 warning at levels that are far lower than federal action limits. For example, the Prop 65 standard for warnings for lead is 0.5 µg/day, which is well below the federal and international standards.

Why don't all similar products carry the warning?

- Products sold in California require Prop 65 labelling while similar products sold elsewhere do not.
- A company involved in a Prop 65 lawsuit reaching a settlement may be required to use Prop 65 warnings for its products, but other companies making similar products may have no such requirement.
- The enforcement of Prop 65 is inconsistent.
- Companies may elect not to provide warnings because they conclude that they are not required to do so under Prop 65; a lack of warnings for a product does not mean that the product is free of listed chemicals at similar levels.

Why does Toro include this warning?

Toro has chosen to provide consumers with as much information as possible so that they can make informed decisions about the products they buy and use. Toro provides warnings in certain cases based on its knowledge of the presence of one or more listed chemicals without evaluating the level of exposure, as not all the listed chemicals provide exposure limit requirements. While the exposure from Toro products may be negligible or well within the "no significant risk" range, out of an abundance of caution, Toro has elected to provide the Prop 65 warnings. Moreover, if Toro does not provide these warnings, it could be sued by the State of California or by private parties seeking to enforce Prop 65 and subject to substantial penalties.



Count on it.