Installation Manual

Installation and Appliance Setup

CAUTION! Risk of Fire! *DO NOT store instruction manuals inside fireplace cavity. High temperatures could cause a fire.*

INSTALLER: Leave this manual with the appliance, not inside the appliance.

CONSUMER: Retain this manual for future reference. Do not store inside the appliance

NOTICE: DO NOT *discard this manual!*

Models:

RUBY25IN
RUBY25IL
RUBY30IN
RUBY30IL
RUBY35IN
RUBY35IL

MAJESTIC

GAS-FIRED

c UL US

LISTED

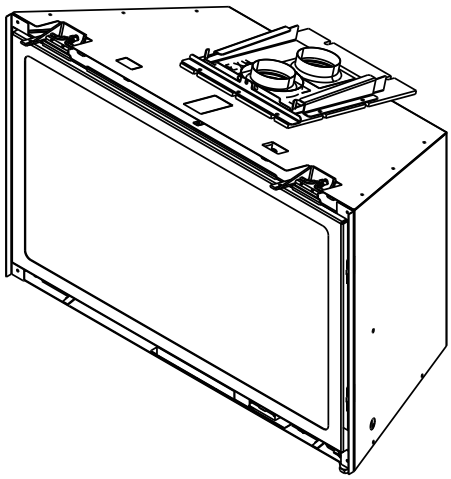

This appliance may be installed as an OEM installation in manufactured home (USA only) or mobile home and must be installed in accordance with the manufacturer's instructions and the *Manufactured Home Construction and Safety Standard, Title 24 CFR, Part 3280* in the United States, or the *Standard for Installation in Mobile Homes, CAN/CSA Z240 MH Series,* in Canada.

This appliance is only for use with the type(s) of gas indicated on the rating plate. This appliance is not convertible for use with other gases, unless a certified kit is used.

Pour demander un exemplaire en français de ce manuel d'installation, visitez www.majestic.com.

⚠ WARNING:
FIRE OR EXPLOSION HAZARD
Failure to follow safety warnings exactly could result in serious injury, death, or property damage.

- **DO NOT** store or use gasoline or other flammable vapors and liquids in the vicinity of this or any other appliance.
- **What to do if you smell gas**
  - **DO NOT** try to light any appliance.
  - **DO NOT** touch any electrical switch. **DO NOT** use any phone in your building.
  - Leave the building immediately.
  - Immediately call your gas supplier from a neighbor's phone. Follow the gas supplier's instructions.
  - If you cannot reach your gas supplier, call the fire department.
- Installation and service must be performed by a qualified installer, service agency, or the gas supplier.

⚠ DANGER

HOT GLASS WILL CAUSE BURNS.

DO NOT TOUCH GLASS UNTIL COOLED.

NEVER ALLOW CHILDREN TO TOUCH GLASS.

A barrier designed to reduce the risk of burns from the hot viewing glass is provided with this appliance and must be installed for the protection of children and other at-risk individuals.

⚠ Safety Alert Key:

- ***DANGER!*** *Indicates a hazardous situation which, if not avoided will result in death or serious injury.*
- ***WARNING!*** *Indicates a hazardous situation which, if not avoided could result in death or serious injury.*
- ***CAUTION!*** *Indicates a hazardous situation which, if not avoided, could result in minor or moderate injury.*
- ***NOTICE:*** *Used to address practices not related to personal injury.*

Note: *The term "recommend" or "recommended" does not indicate a requirement. It is a best practice suggested by Hearth & Home Technologies®.*

Table of Contents

Installation Standard Work Checklist 3

1 Product Specific and Important Safety Information

A. Appliance Certification 4
B. Glass Specifications 4
C. BTU Specifications 4
D. High Altitude Installations 4
E. Non-Combustible Materials Specification 4
F. Combustible Materials Specification 4
G. Electrical Codes 4
H. California 4

2 Getting Started

A. Design and Installation Considerations 5
B. Good Faith Wall Surface 7
C. Tools and Supplies Needed 7
D. Inspect Appliance and Components 7

3 Appliance / Fireplace Requirements and Clearances

A. Appliance/Decorative Barrier Front Dimension Diagrams . 8
B. Minimum Fireplace Opening 12
C. Zero Clearance Wall Extension 14
D. Mantel, Wall Projections, & Hearth Extensions 16
E. Hearth Extension / Vinyl Flooring 17

4 Installation Preparation

A. Cleaning 19
B. Flue Damper 19
C. Gas Line 19
D. Fireplace Conversion Notice 19
E. Electrical Outlet Box 19

5 Installing Vent Pipe and Appliance

A. Vent Limits 20
B. Using Vertical Restrictor 21
C. Venting Components 22
D. Connecting to SLP 23
E. Connecting Vent Pipe 24
F. Placing, Securing and Leveling the Appliance 25
G. Installing Termination Cap 26

6 Electrical Information

A. General Information . . . . . 27 ➔
B. Wiring Requirements . . . . . 28 ➔
C. Installation / Service for Fan 29
D. Installation / Service for Halogens 30

7 Gas Information

A. Fuel Conversion 31
B. Gas Pressure 32
C. Gas Connection 32
D. High Altitude Installations 33
E. Air Shutter Setting 33
F. Service / Replace Appliance Gas Valve 33

8 Finishing

A. Mantel, Wall Projections & Hearth Extensions 34
B. Hearth Extension 35

9 Appliance Setup

A. Fixed Glass Assembly 37
B. Remove the Shipping Materials 38
C. Clean the Appliance 39
D. Accessories 39
E. Mystic Embers Placement 39
F. Glowing Ember Placement 39
G. Install the Log Assembly 40
H. Install Decorative Barrier Front and Surround 46
I. Appliance Break-In 47
J. Heat Management 47

10 Reference Materials

A. Vent Components 48
B. Accessories 49

➔ = Contains updated information.

Installation Standard Work Checklist

ATTENTION INSTALLER:
Follow this Standard Work Checklist

This standard work checklist is to be used by the installer in conjunction with, not instead of, the instructions contained in this installation manual.

Customer: _____
Lot/Address: _____
_____
Model (circle one): **RUBY25IN, RUBY25IL, RUBY30IN, RUBY30IL, RUBY35IN, RUBY35IL**

Date Installed: _____
Location of Fireplace: _____
Installer: _____
Dealer/Distributor Phone # _____
Serial #: _____

WARNING! Risk of Fire or Explosion! *Failure to install appliance according to these instructions could lead to a fire or explosion.*

Appliance Install	**YES**	**IF NO, WHY?**
Verified fireplace is clean and remove/block open damper/modify damper for vent pipe clearance (Section 4).	☐	_____
Verified clearances to combustibles (Sections 3, 5, 8)	☐	_____
Locate multi-purpose tool (Section 2).	☐	_____
Appliance is leveled and secured (Section 5.F).	☐	_____
Venting/Chimney Section 5		
Exhaust and inlet flex vent pipe are properly formed and routed through existing fireplace damper.	☐	_____
Exhaust and inlet flex vent pipe are properly installed to the correct collars, sealed and secured to top slide plate and to the termination cap.	☐	_____
Vertical restrictors are properly set (if applicable).	☐	_____
Exterior roof flashing installed and sealed.	☐	_____
Termination cap installed, secured and sealed to top slide plate.	☐	_____
Electrical Section 6		
Unswitched power (110-120 VAC) provided to the appliance.	☐	_____
Switch wires properly installed.	☐	_____
Gas Section 7		
Proper appliance for fuel type.	☐	_____
Was a conversion performed?	☐	_____
Leak check performed and inlet pressure verified.	☐	_____
Verified proper air shutter setting for installation type.	☐	_____
Finishing Section 8		
Combustible materials not installed in non-combustible areas.	☐	_____
Verified all clearances meet installation manual requirements.	☐	_____
Mantels and wall projections comply with installation manual requirements.	☐	_____
Appliance Setup Section 9		
All packaging and protective materials removed (inside & outside of appliance).	☐	_____
Refractories, logs, media and embers installed correctly.	☐	_____
Glass assembly and glass seal plate installed and secured.	☐	_____
Accessories installed properly.	☐	_____
Surround and decorative front properly installed. See instructions shipped with appliance front.	☐	_____
Manual bag and all of its contents are removed from inside/under the appliance and given to party responsible for use and operation.	☐	_____
Fireplace warning plate is attached to the existing woodburning fireplace.	☐	_____
Remote control is programmed, functions verified using remote control instructions.	☐	_____
Started appliance and verified no gas leaks exist.	☐	_____

Hearth & Home Technologies recommends the following:

- Photographing the installation and copying this checklist for your file.
- That this checklist remain visible at all times on the appliance until the installation is complete.

Comments: Further description of the issues, who is responsible (Installer/ Builder/ Other Trades, etc) and corrective action needed _____

_____

_____

Comments Communicated to party responsible _____ by _____ on _____
(Builder / Gen. Contractor/) (Installer) (Date)

➔ = Contains updated information.

2542-982C 6/23

1 Product Specific and Important Safety Information

A. Appliance Certification

MODELS: **RUBY25IN, RUBY25IL, RUBY30IN, RUBY30IL, RUBY35IN, RUBY35IL**

LABORATORY: **Underwriters Laboratories, Inc. (UL)**

TYPE: **Direct Vent Heater**

STANDARD: **ANSI Z21.88-2019 CSA 2.33-2019**

This product is listed to ANSI standards for "Vented Gas Fireplace Heaters" and applicable sections of "Gas Burning Heating Appliances for Manufactured Homes and Recreational Vehicles", and "Gas Fired Appliances for Use at High Altitudes".

NOTICE: *This installation must conform with local codes. In the absence of local codes you must comply with the National Fuel Gas Code, ANSI Z223.1-latest edition in the U.S.A. and the CAN/CGA B149 Installation Codes in Canada.*

NOT INTENDED FOR USE AS A PRIMARY HEAT SOURCE. This appliance is tested and approved as either supplemental room heat or as a decorative appliance. It should not be factored as primary heat in residential heating calculations.

B. Glass Specifications

This appliance is equipped with ceramic glass. Replace glass only with ceramic glass. Please contact your dealer for replacement glass.

C. BTU Specifications

Models *(U.S. or Canada)*		Maximum Input BTU/h	Minimum Input BTU/h	Orifice Size (DMS)
RUBY25IN (NG)	*(0-2000 FT)*	27,000	18,900	40
RUBY25IL (Propane)	*(0-2000 FT)*	25,000	17,500	53
RUBY30IN (NG)	*(0-2000 FT)*	32,700	22,890	35
RUBY30IL (Propane)	*(0-2000 FT)*	32,000	22,400	51
RUBY35IN (NG)	*(0-2000 FT)*	35,000	24,500	33
RUBY35IL (Propane)	*(0-2000 FT)*	35,000	24,500	50

D. High Altitude Installations

NOTICE: *If the heating value of the gas has been reduced, these rules do not apply. Check with your local gas utility or authorities having jurisdiction.*

When installing above 2000 feet elevation:

- In the USA: Reduce input rate 4% for each 1000 feet above 2000 feet.
- In CANADA: Input ratings are certified without a eduction of input rate for elevations up to 4500 feet (1370 m) above sea level. Please consult provincial and/or local authorities having jurisdiction for installations at elevations above 4500 feet (1370 m).

Check with your local gas utility to determine proper orifice size.

E. Non-Combustible Materials Specification

Material which will not ignite and burn. Such materials are those consisting entirely of steel, iron, brick, tile, concrete, slate, glass or plasters, or any combination thereof.

Materials that are reported as passing **ASTM E 136, Standard Test Method for Behavior of Materials in a Vertical Tube Furnace at 750 ºC** shall be considered non-combustible materials.

F. Combustible Materials Specification

Materials made of or surfaced with wood, compressed paper, plant fibers, plastics, or other material that can ignite and burn, whether flame proofed or not, or plastered or unplastered shall be considered combustible materials.

G. Electrical Codes

NOTICE: *This appliance must be electrically wired and grounded in accordance with local codes or, in the absence of local codes, with* **National Electric Code ANSI/NFPA 70-latest edition** *or the* **Canadian Electric Code CSA C22.1.**

- A 110-120 VAC circuit for this product must be protected with ground-fault circuit-interrupter protection, in compliance with the applicable electrical codes, when it is installed in locations such as in bathrooms or near sinks.

H. California

WARNING: This product and the fuels used to operate this product (liquid propane or natural gas), and the products of combustion of such fuels, can expose you to chemicals including benzene, which is known to the State of California to cause cancer and reproductive harm. For more information go to: www.P65Warnings.ca.gov.

2 Getting Started

A. Design and Installation Considerations

Gas inserts are designed for installations into solid fuel masonry or UL127 listed factory built fireplaces. No additional outside air source is required.

Installation MUST comply with local, regional, state and national codes and regulations. Consult insurance carrier, local building inspector, fire officials or authorities having jurisdiction over restrictions, installation inspection and permits.

Prior to installing the gas insert:

- Ensure chimney is constructed of non-combustible materials.
- Ensure chimney is clean and in good working order.
- Ensure that all chimney cleanouts fit properly to prevent air leakage into chimney.
- Ensure combustible mantel and surround clearances comply with insert requirements.
- Ensure all joints are properly engaged and the chimney is properly secured.
- Determine minimum fireplace size. See Section 3.A and 3.B.
- Determine gas supply piping requirements.
- Determine electrical wiring requirements.
- Determine finishing details.
- Determine whether optional accessories—devices such as a wall switch or remote control—are desired.

Installation and service of this appliance should be performed by qualified personnel. Hearth & Home Technologies recommends HHT Factory Trained or NFI certified professionals.

hearthED FACTORY TRAINING Fuel Your Fire

NFI NATIONAL FIREPLACE INSTITUTE A CERTIFICATION AGENCY

Improper installation, adjustment, alteration, service or maintenance can cause injury or property damage. For assistance or additional information, consult a qualified service technician, service agency or your dealer.

Multi-Purpose Tool

- See Figure 2.1 for multi-purpose tool functions and features.
- See Figure 2.2 for multi-purpose tool shipping location.
- See Figure 2.3 for multi-purpose tool storage location options.

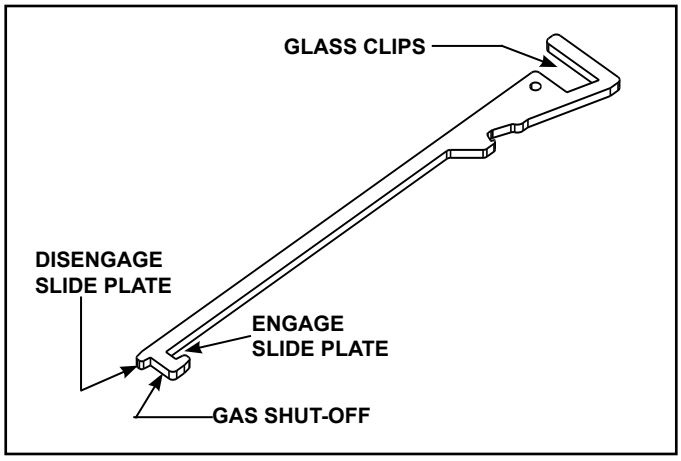

Figure 2.1 Multi-Purpose Tool

Multi-Purpose Tool - Shipping Location

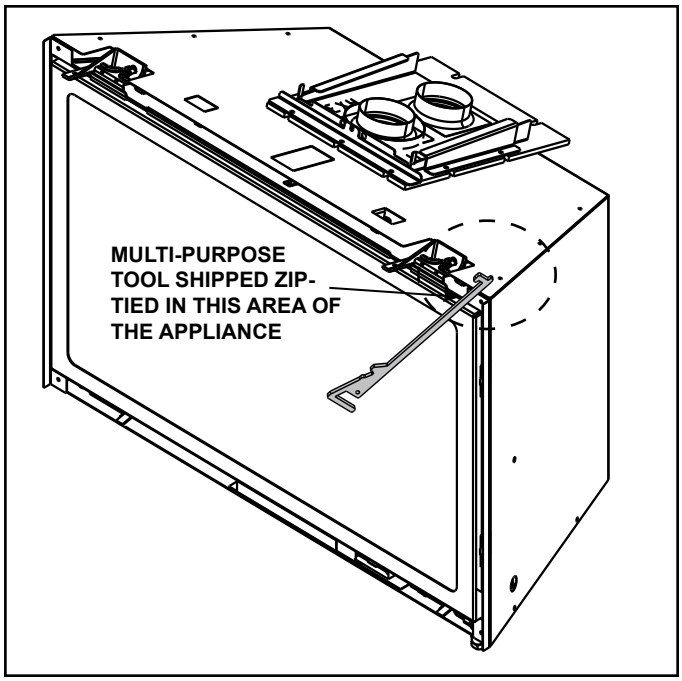

Figure 2.2 Multi-Purpose Tool shipping Location

- Remove multi-purpose tool by cutting and discarding zip-tie.
- See Figure 2.3 for multi-purpose tool storage.
- See Figure 2.1 for multi-purpose tool features / functions.

Multi-Purpose Tool - Storage Options

OPTION A
Multi-purpose tool can be stored behind the appliance front.

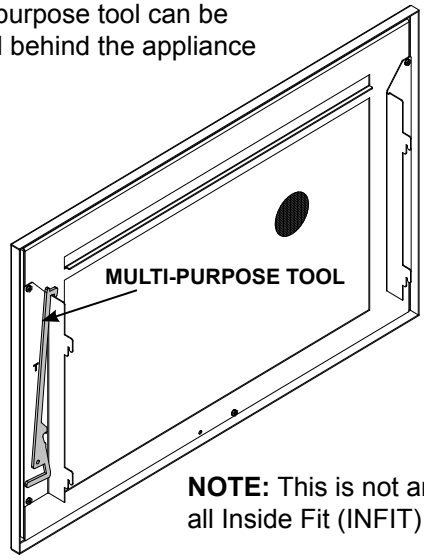

NOTE: This is not an option for all Inside Fit (INFIT) fronts.

OPTION B
Multi-purpose tool can be stored behind the surround.

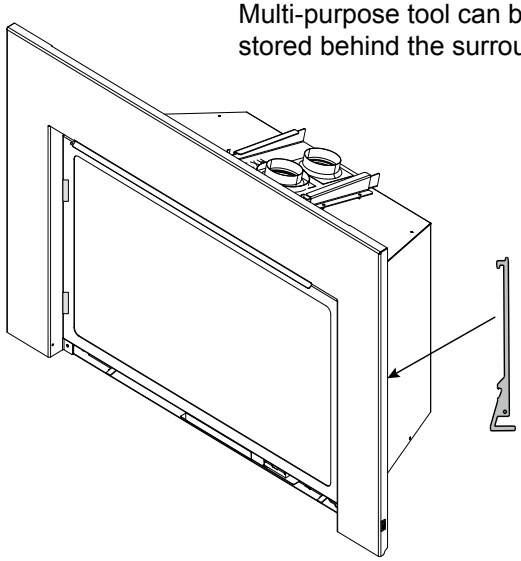

OPTION C
Multi-purpose tool can be stored in appliance manual bag.

Figure 2.3 Multi-Purpose Tool Storage Options

DO NOT store appliance manual bag in or around the appliance.

B. Good Faith Wall Surface

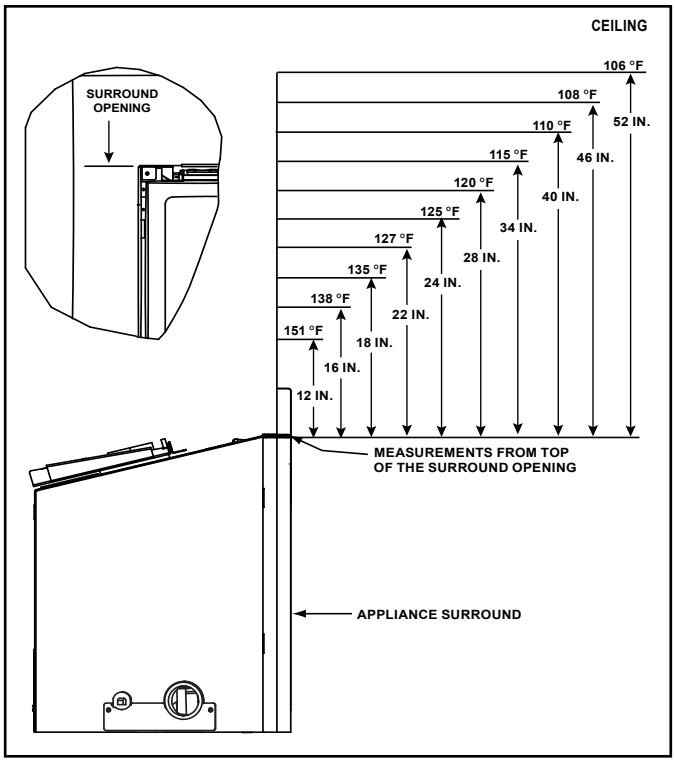

Figure 2.4 Good Faith Wall Surface Temperatures Above Appliance

If installing a television (TV) above the appliance, see Section 3 of the appliance Owner's Manual.

NOTICE: *Temperatures listed above are taken with a temperature measuring probe as prescribed by the test standard used for appliance certification. Temperatures on walls or mantels taken with an infrared thermometer may yield increased temperatures of up to 30 ºF or more depending on the thermometer settings and material characteristics being measured. Use appropriate finishing materials that are able to withstand these conditions. For additional finishing guidelines, see Section 8.*

C. Tools and Supplies Needed

Before beginning the installation be sure that the following tools and building supplies are available.

Tape measure	Pliers
Hammer	Phillips screwdriver
Voltmeter	Electric drill and bits (1/4 in.)
Gloves	Safety glasses
Level	Reciprocating saw
Manometer	Flat blade screwdriver

Stove cement / Aluminum foil tape

3/16 in. Allen wrench (Rear Leveling Legs)

Elongated pressure taps (Recommended)

Noncorrosive leak check solution

Caulking material (300 ºF minimum continuous exposure rating)

D. Inspect Appliance and Components

- Carefully remove the appliance and components from the packaging.
- The vent system components, decorative barrier fronts and surrounds are shipped in separate packages.
- If packaged separately, the log set must be installed.
- Report to your dealer any parts damaged in shipment, particularly the condition of the glass.
- **Read all of the instructions before starting the installation. Follow these instructions carefully during the installation to ensure maximum safety and benefit.**

WARNING! Risk of Fire or Explosion! *Damaged parts could impair safe operation.* ***DO NOT*** *install damaged, incomplete or substitute components. Keep appliance dry.*

Hearth & Home Technologies disclaims any responsibility for, and the warranty will be voided by, the following actions:

- Installation and use of any damaged appliance or vent system component.
- Modification of the appliance or vent system.
- Installation other than as instructed by Hearth & Home Technologies.
- Improper positioning of the gas logs or the glass door.
- Installation and/or use of any component part not approved by Hearth & Home Technologies.

Any such action may cause a fire hazard.

WARNING! Risk of Fire, Explosion or Electric Shock! ***DO NOT*** *use this appliance if any part has been under water. Call a qualified service technician to inspect the appliance and to replace any part of the control system and/or gas control which has been under water.*

3 Appliance / Fireplace Requirements and Clearances

A. Appliance/Decorative Barrier Front Dimension Diagrams

Dimensions are actual appliance dimensions. Use for reference only. For addditional clearances refer to Sections 3.D and 3.E.

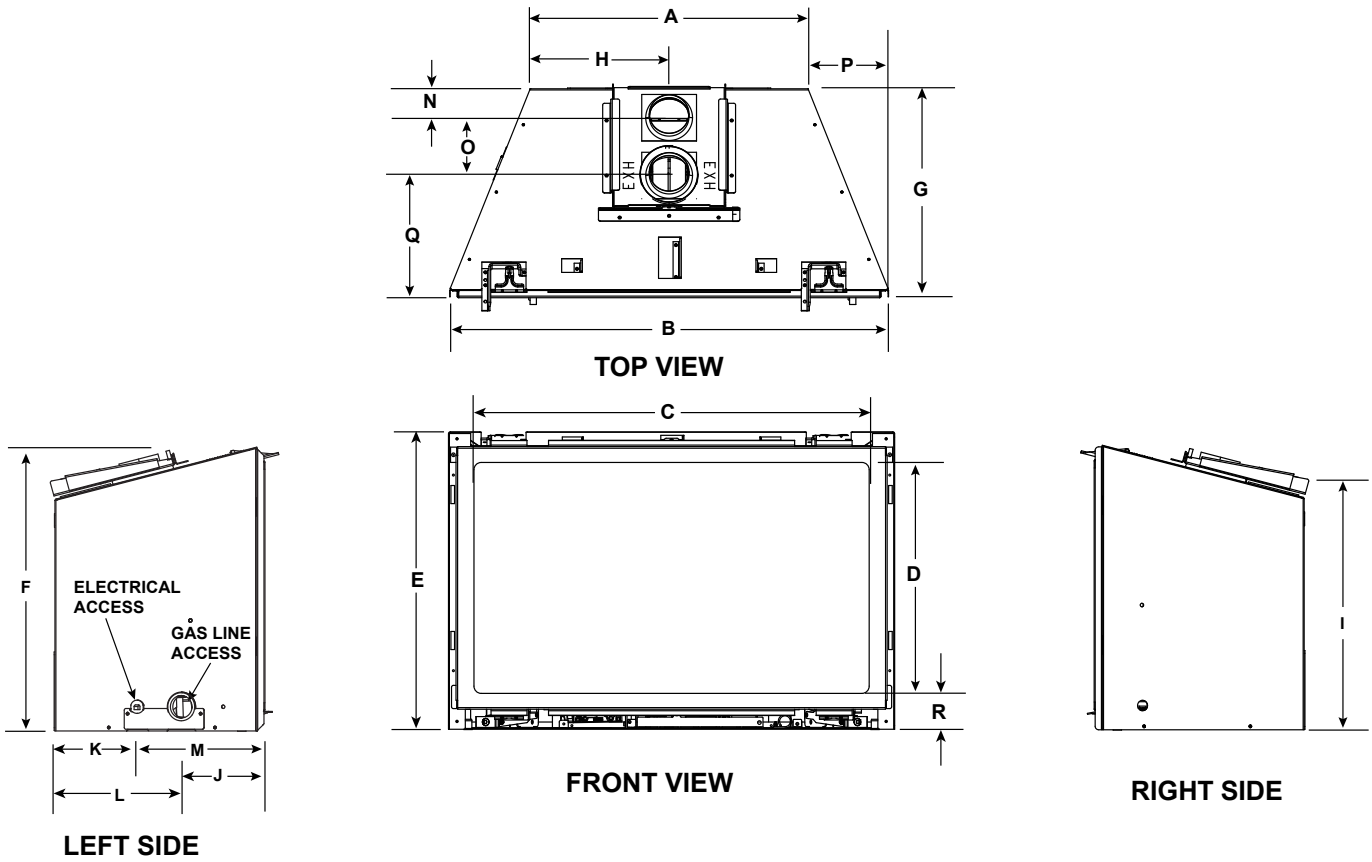

MODEL DIMENSIONS						
Location	25 in.		30 in.		35 in.	
	IN	MM	IN	MM	IN	MM
A	14-5/8	372	19-5/8	499	24-5/8	626
B	26-1/8	664	31-1/8	791	36-1/8	918
C	22-1/2	572	27-1/2	699	32-1/2	826
D	12-7/16	316	15-15/16	405	19-3/8	492
E	17-1/16	433	20-3/4	527	24	610
F	16-5/8	422	20-1/8	511	23-5/8	600
G*	14-1/2	368	14-1/2	369	14-1/2	368
H	7-5/16	186	9-13/16	249	12-5/16	313
I	15	381	18-15/16	481	21-7/16	545

MODEL DIMENSIONS						
Location	25 in.		30 in.		35 in.	
	IN	MM	IN	MM	IN	MM
J	5-11/16	144	5-11/16	144	5-11/16	144
K	5-7/8	149	5-7/8	149	5-7/8	149
L	9	229	9	229	9	229
M	8-3/4	222	8-3/4	222	8-3/4	222
N	2-1/8	54	2-1/8	54	2-1/8	54
O	4-1/16	103	4-1/16	103	4-1/16	103
P	5-3/4	146	5-3/4	146	5-3/4	146
Q	8-3/4	222	8-3/4	222	8-3/4	222
R	2-7/16	62	2-7/16	62	2-7/16	62

***Note:** Location G is the appliance depth measurement, for installation depth reference Location E on Figure 3.8.

Figure 3.1 Appliance Dimensions

DECORATIVE BARRIER FRONTS - INSIDE FIT

IMPORTANT! This fireplace requires an installed decorative barrier front to prevent direct contact with the hot viewing glass. DO NOT operate the fireplace with the barrier removed.

Decorative barrier front must be ordered at time of fireplace purchase. If decorative barrier front is not present, contact dealer.

* ***NOTICE:*** *1/2 inch gap must be maintained or components will overheat.*

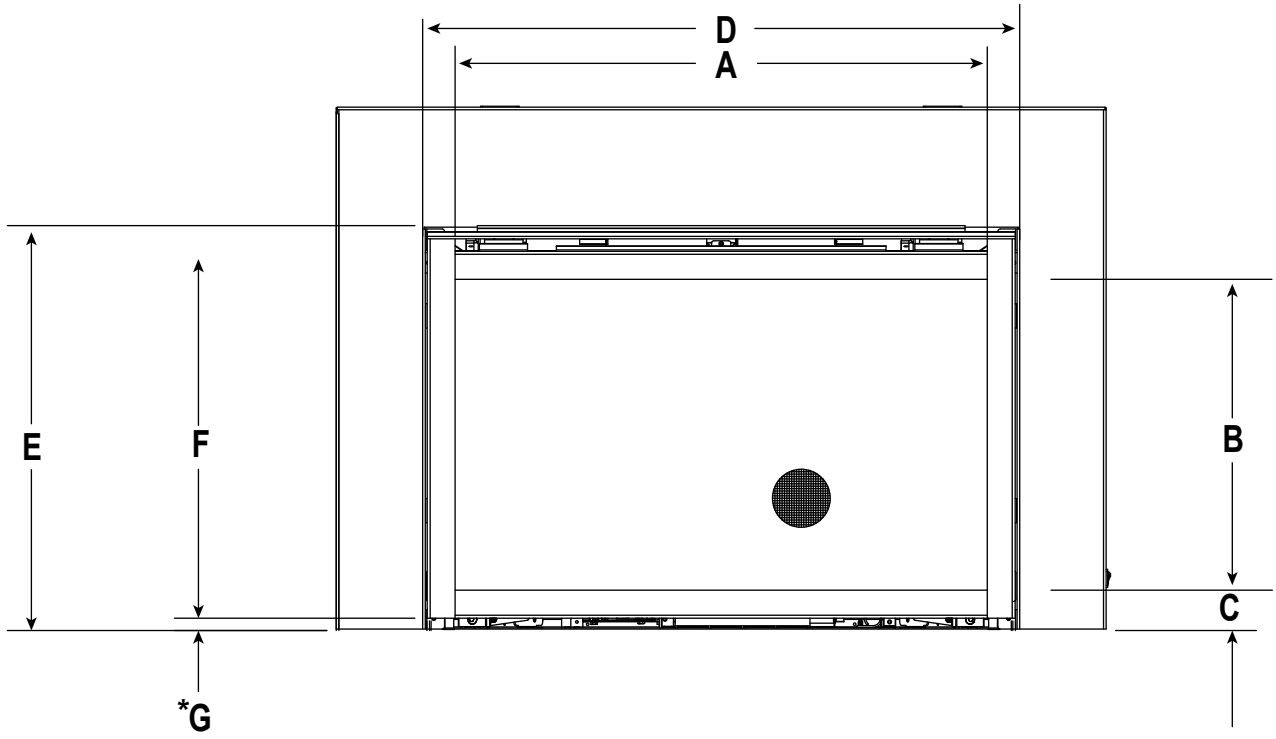

			A	B	C	D	E	F	G
RUBY25	INFIT-25	in.	22-5/8	12-9/16	1-7/8	25-5/8	17	16-1/2	1/2
		mm	575	319	48	651	432	420	13
RUBY30	INFIT-30	in.	27-5/8	16-1/16	1-7/8	30-5/8	20-1/2	20	1/2
		mm	702	408	48	778	521	508	13
RUBY35	INFIT-35	in.	32-5/8	19-9/16	1-7/8	35-5/8	24	23-1/2	1/2
		mm	829	497	48	905	610	597	13

Figure 3.2 Decorative Barrier Front Dimensions - Inside Fit

DECORATIVE BARRIER FRONTS - CLEAN SCREEN

* ***NOTICE:*** *1/2 inch gap must be maintained or components will overheat.*

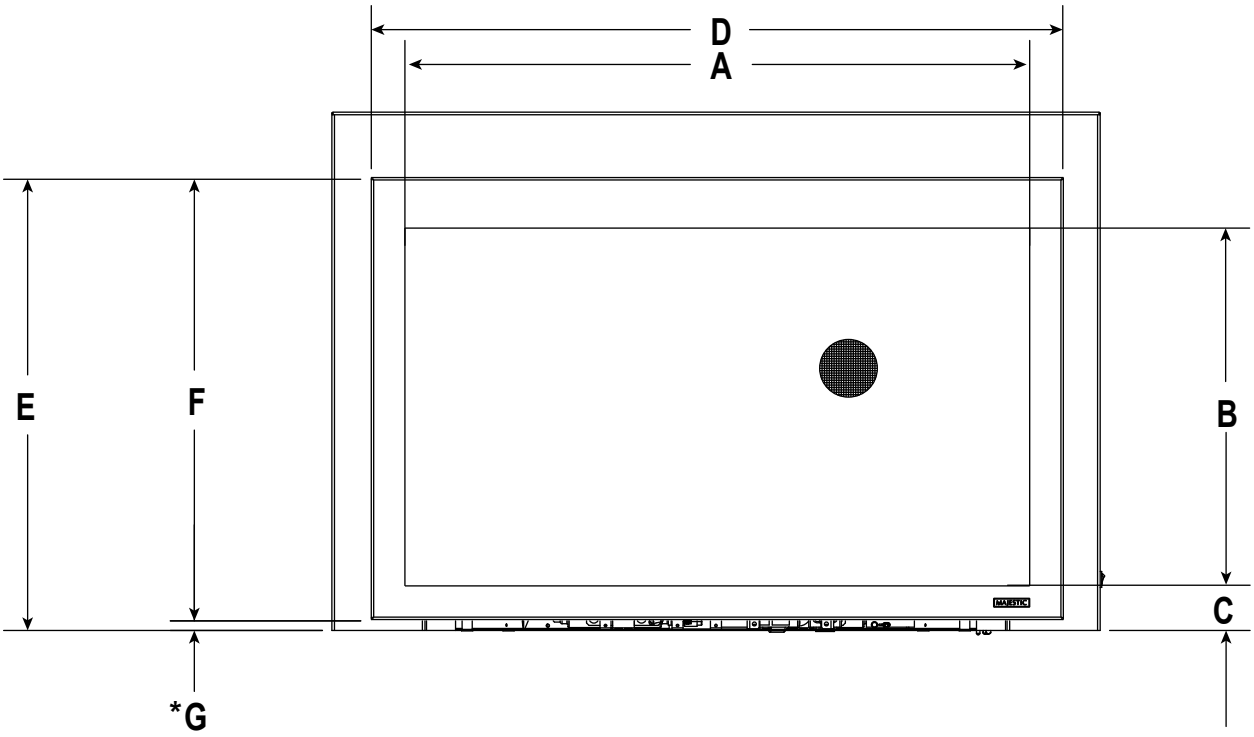

			A	B	C	D	E	F	G
RUBY25	CSFI25	in.	27-3/8	15-1/8	3-1/2	31	20	19-1/2	1/2
		mm	695	384	89	787	508	495	13
RUBY30	CSFI30	in.	32-3/8	18-5/8	3-1/8	36	23-1/2	23	1/2
		mm	822	473	79	914	597	584	13
RUBY35	CSFI35	in.	37-3/8	22-1/8	3-1/8	41	27	26-1/2	1/2
		mm	949	562	79	1041	686	673	13

Figure 3.3 Decorative Barrier Front Dimensions - Clean Screen

DECORATIVE BARRIER FRONTS - CONTEMPORARY ARCH

* ***NOTICE:*** *1/2 inch gap must be maintained or components will overheat.*

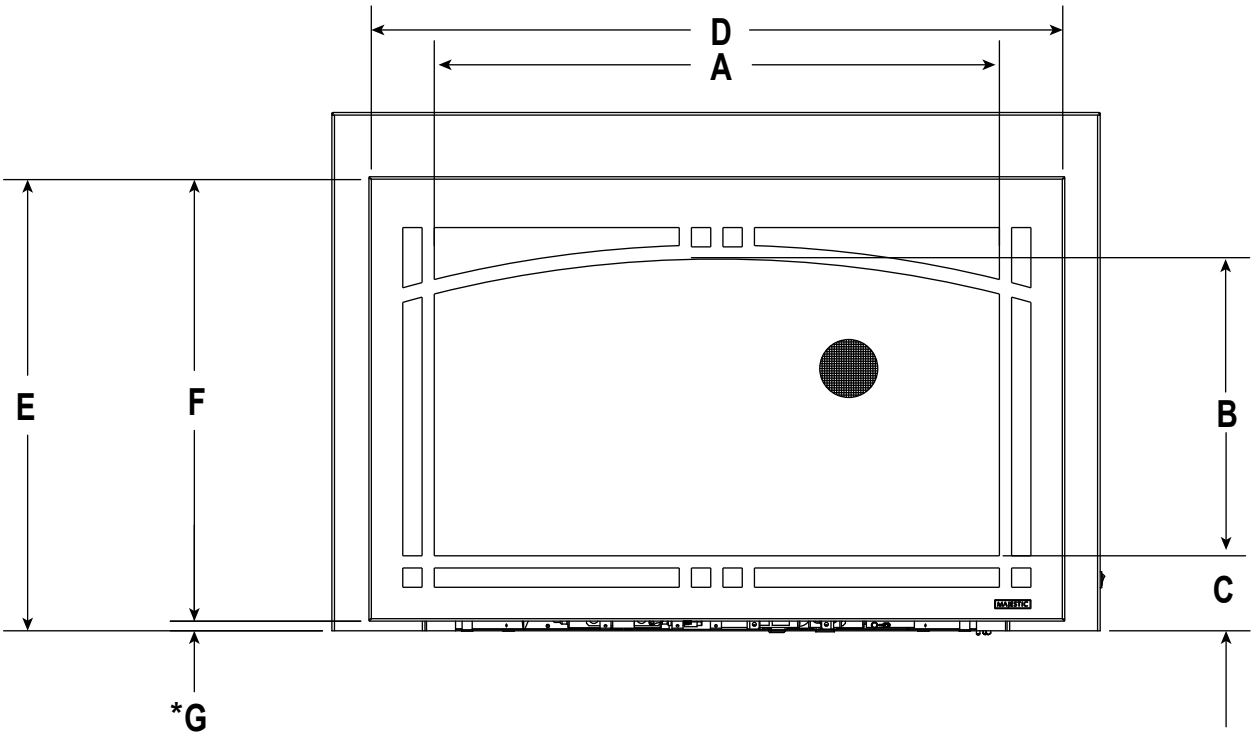

			A	B	C	D	E	F	G
RUBY25	CASFI25	in.	24-1/16	12	3-7/8	31	20	19-1/2	1/2
		mm	610	305	98	787	508	495	13
RUBY30	CASFI30	in.	29-1/16	15-3/8	3-7/8	36	23-1/2	23	1/2
		mm	738	391	98	914	597	584	13
RUBY35	CASFI35	in.	34-1/16	18-7/8	3-7/8	41	27	26-1/2	1/2
		mm	865	479	98	1041	686	673	13

Figure 3.4 Decorative Barrier Front Dimensions - CONTEMPORARY ARCH

B. Minimum Fireplace Opening

Minimum fireplace opening requirements for a standard 3/4 inch deep surround are shown in Figure 3.7. For smaller openings, a custom surround is available.

WARNING! Risk of Fire or Burns! *Provide adequate clearance around air openings and for service access.* ***Due to high temperatures, the appliance should be located out of traffic and away from furniture and draperies.***

For Installation into a Zero Clearance Wood burning fireplace:

- The brick (refractory), glass doors, screen rails, screen mesh and log grates can be removed from a factory built firebox in order to gain minimum gas insert opening requirements.
- Any smoke shelves, shields and baffles may be removed from the factory built firebox if attached with mechanical fasteners.

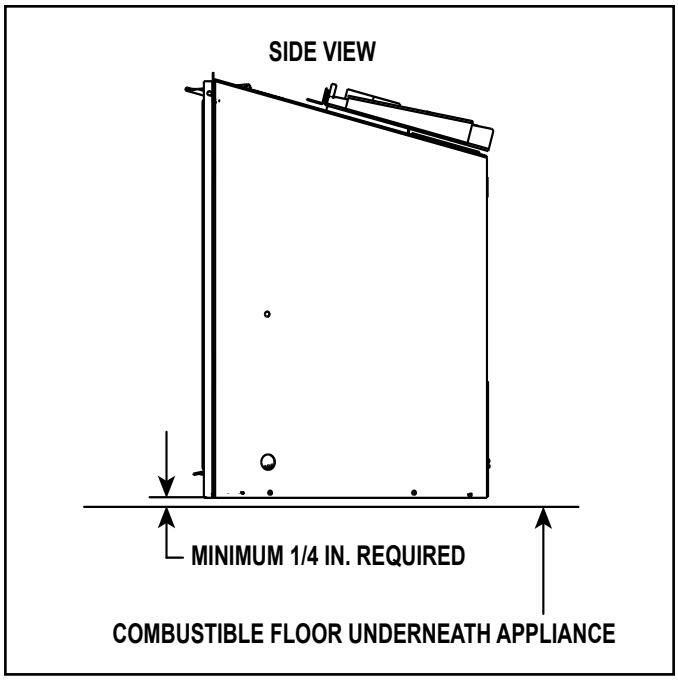

Figure 3.5 Solid Fuel Floor Clearance

- The appliance may not be placed directly on the base of the outer wrap, a 1/4 inch airspace **MUST** be provided between the insert and the floor of the outer wrap. Use the leveling legs to raise the insert a minimum of 1/4 inch. The original fireplace may never be returned to solid fuel in this condition. The sidewalls and top structure of the firebox may not be altered with the exception of removable baffles and dampers.
- The metal floor of the solid fuel firebox may be removed to facilitate the installation of the insert.
- A metal lip protuding above the hearth pad of the solid fuel firebox may be removed. See Figure 3.7.

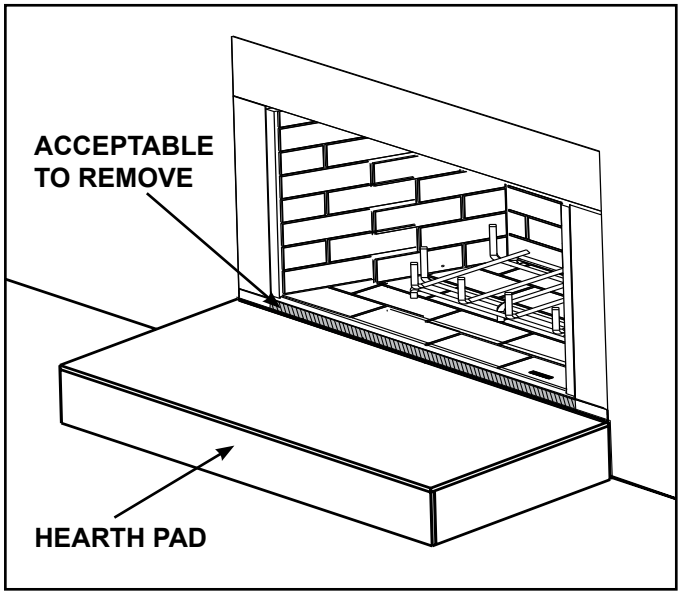

Figure 3.6 Solid Fuel Firebox

- Cutting of any sheet metal parts of the fireplace in which the gas fireplace insert is to be installed is prohibited, except the floor and front lip as tested for and as noted above. See Section 4.C for gas line exception.
- A minimum 1/4 inch gap from the bottom of the appliance to the metal floor of the solid fuel firebox is **REQUIRED.** See side view in Figure 3.5.
- Manufactured gas inserts can be installed as a zero clearance wall extension appliance. See Section 3C for clearance detail.

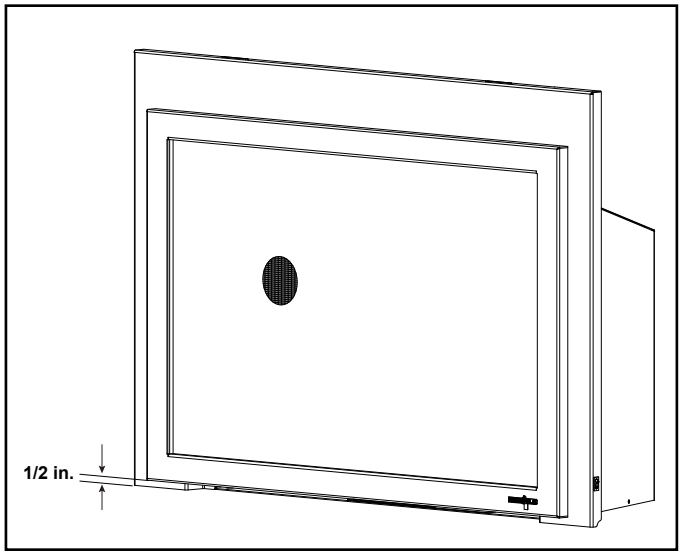

Figure 3.7 Minimum Required 1/2 in. Gap

NOTICE: *1/2 inch gap must be maintained or components will overheat.*

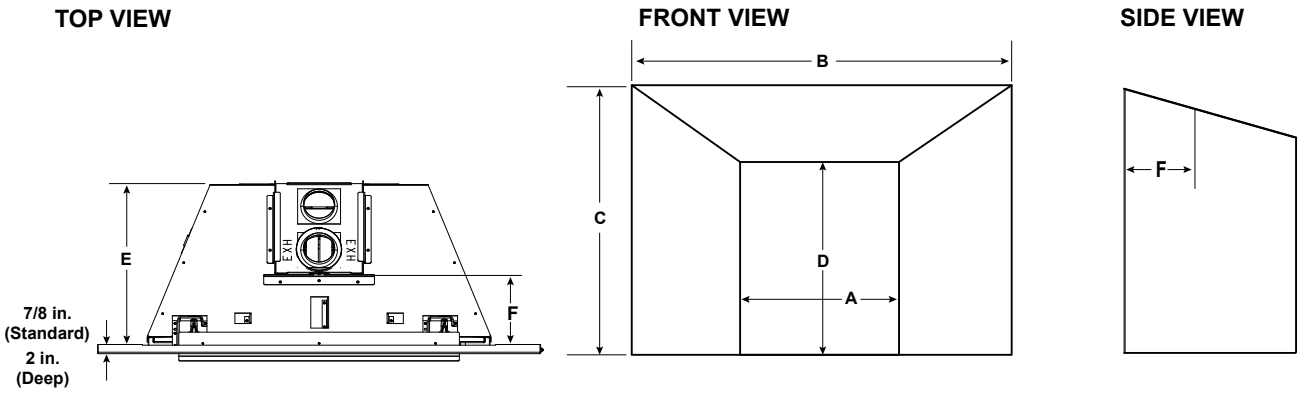

MINIMUM FIREBOX OPENING							
Location		25 inch		30 inch		35 inch	
		Inches	Millimeters	Inches	Millimeters	Inches	Millimeters
A	Opening Width - Rear	15-1/8	384	20-1/8	511	25-1/8	638
B	Opening Width - Front	26-5/8	676	31-5/8	803	36-5/8	930
C	Opening Height - Front	17-5/16	439	21	533	24-1/4	616
D	Opening Height - Rear	15-1/4	387	19-3/16	487	21-11/16	551
E*	Unit Opening Depth	15	381	15	381	15	381
F	Venting Depth - Front	7-5/8	194	7-5/8	194	7-5/8	194

Note: Dimensions assume 1/4 inch clearance on all sides.
Note: If exhaust collar on insert and fireplace damper do not line up, add 4 inches (102 mm) to minimum fireplace height for bends in vent pipe.

2 INCH DEEP SURROUND MINIMUM FIREBOX OPENING							
Location		25 inch		30 inch		35 inch	
		Inches	Millimeters	Inches	Millimeters	Inches	Millimeters
B	Alternate Opening Width - Front	26	660	31	787	36	914
C	Alternate Opening Height - Front	17-5/16	440	21	533	24-1/4	616
E	Alternate Unit Opening Depth	14	356	14	356	14	356

Note: 2 inch deep surrounds, in medium size black finish have been created as standard accessory.
Sku Names: MI30-4230D-BK, MI35-4432D-BK

*Unit depth is measured to the back of the surround to give the depth needed for installation.

In addition to these dimensions, also reference Section 3.D and 3.E..

Figure 3.8 Firebox Opening - Standard Surround - 3/4 in.

Custom Surrounds

Custom surrounds are available. See your dealer for information. Standard surrounds are 3/4 inches deep. Custom surrounds are available up to 3 inches deep. A 3 inch deep surround would reduce the unit opening depth **(E*)** by 2-1/4 inches (3 in. - 3/4 in. = 2-1/4 in).

On Site Custom Surrounds

On site custom surrounds are available. See your dealer for information. On site custom surrounds are flush and have no depth. A flush surround would increase the unit opening depth **(E*)** by 3/4 inch.

C. Zero Clearance Wall Extension

Surrounds MUST overlap wall extension.

A non-combustible wall extension can be used to cover an existing masonry surface. Wall extensions are typically used to improve cosmetics.

WARNING! Risk of Fire! *Comply with all minimum clearances to combustibles as specified. Framing or finishing material closer than the minimums listed must be constructed entirely of noncombustible materials (i.e., steel studs, concrete board, etc).*

Combustible facings must not extend behind the insert surround. See Section 1.E and 1.F.

Non-Combustible Materials Specification

Material which will not ignite and burn. Such materials are those consisting entirely of steel, iron, brick, tile, concrete, slate, glass or plasters, or any combination thereof.

Materials that are reported as passing **ASTM E 136, Standard Test Method for Behavior of Materials in a Vertical Tube Furnace at 750 ºC.**

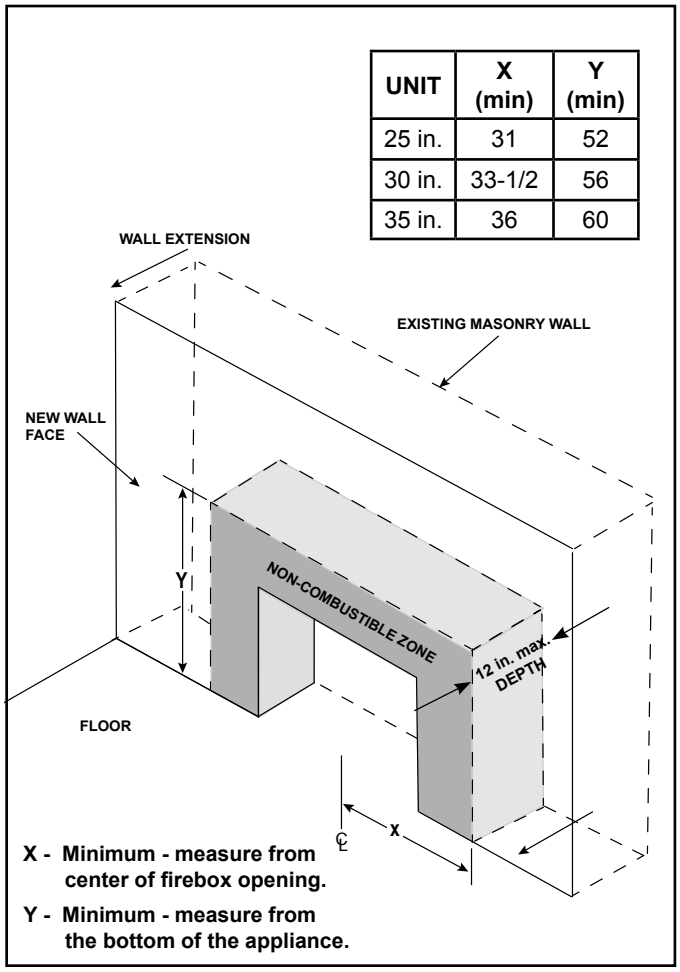

UNIT	X (min)	Y (min)
25 in.	31	52
30 in.	33-1/2	56
35 in.	36	60

Figure 3.9 Non-Combustible Framing Requirement

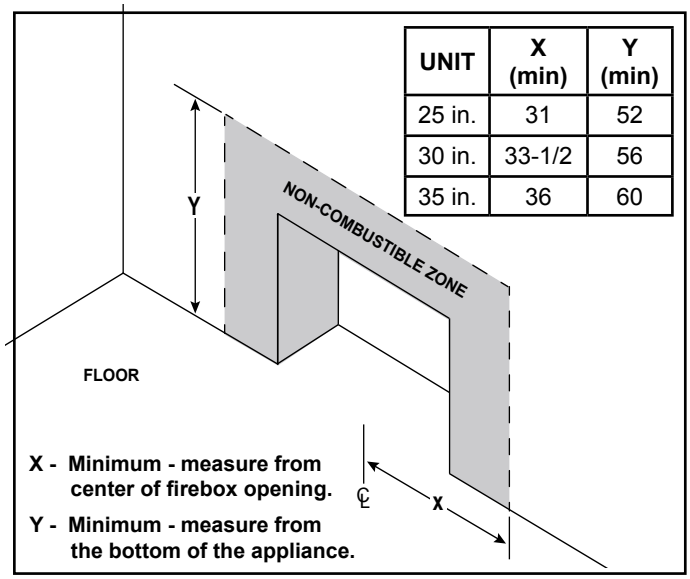

UNIT	X (min)	Y (min)
25 in.	31	52
30 in.	33-1/2	56
35 in.	36	60

Figure 3.10 Non-Combustible Facing Requirement

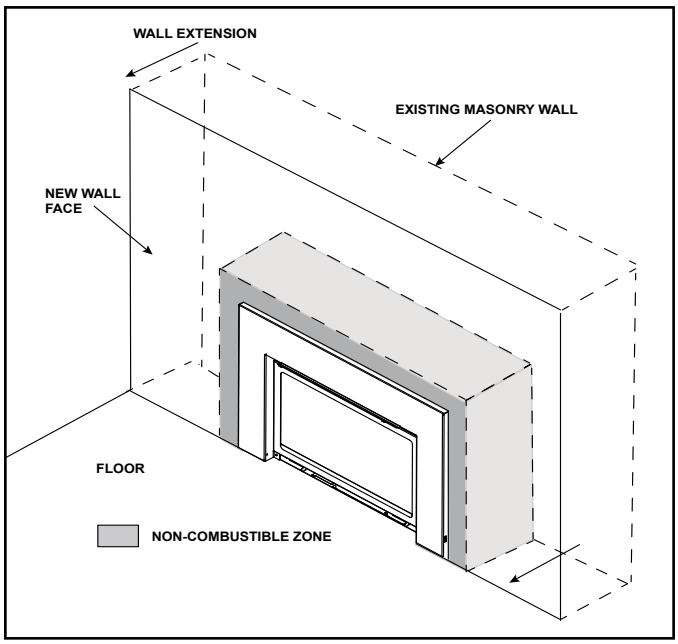

Figure 3.11 Non-Combustible Framing / Facing Requirement

- Facing and/or finishing materials must not interfere with air flow through decorative barrier fronts.
- Facing and/or finishing materials must never overhang into the glass opening.
- Observe all clearances when applying combustible materials.
- Maximum depth of wall extension is 12 inches. This may be limited by the flex pipe's ability to connect to the starting collar.
- Covering combustible materials with non-combustible materials does not qualify material as non-combustible.

WARNING! Risk of Fire! DO NOT *apply combustible materials beyond the minimum clearances. Comply with all minimum clearances to combustibles as specified in this manual. Overlapping materials could ignite and will interfere with proper operation of decorative barrier fronts.*

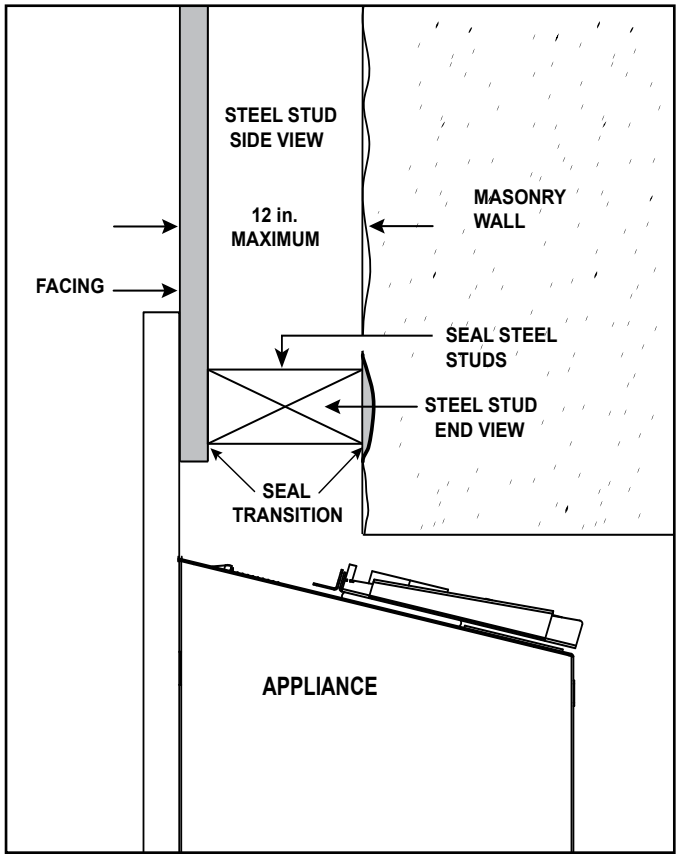

Figure 3.12 Transition Sealing Detail for Wall Extensions (Side View)

Wall Extension

Wall extension must be sealed to existing masonry wall. See Figure 3.13. Framing studs may not sit flush against existing masonry wall. In order to keep heat from escaping behind the wall this transition must be sealed. Also, slots in steel studs must be sealed.

- Seal with a high temperature silicone 300 °F.

and / or

- Packing insulation into voids between the masonry wall and steel studs is acceptable.

Note: Combustible materials may be used to seal wall extension to existing masonry wall as long as it is outside the non-combustible zone.

Painting

If desired finishing includes a painted wall, a high-quality 100% acrylic latex paint with a high-quality latex primer base coat are recommended around the appliance to limit discoloration. Oil-based or standard acrylic paints may be more prone to discoloration due to heat exposure.

Drywall Joint-Crack Prevention and Repair

Drywall joints around the fireplace will be affected by exposure to elevated temperatures, along with other environmental, structural factors due to new construction, and methods used to install and finish the drywall. If a crack does emerge adjacent to the fireplace, it can be permanently repaired by filling it with a paintable latex caulk, followed by repainting.

Some movement of the screws used to secure the non-combustible board to the appliance/surround framing is expected. If a blemish begins to show over a screw head, sand the surface to remove the blemish and repaint.

NOTE: **Concealed sections of 3 in. flex pipe must be contained inside existing masonry fireplace flue vent or installed into an existing wood burning vent system.**

D. Mantel, Wall Projections, & Hearth Extensions

WARNING! Risk of Fire! *Comply with all minimum clearances to combustibles as specified. Framing or finishing material closer than the minimums listed must be constructed entirely of noncombustible materials (i.e., steel studs, concrete board, etc).*

Clearance to combustible material under the insert is 1/4 inch (6 mm).

- *Use leveling legs to raise insert minimum 1/4 inch (6 mm) above combustible material or outer wrap of factory built firebox.*

Combustible facings must not extend behind the insert surround. For non-combustible material specifications refer to Section 1.E and 1.F.

Mantel Legs or Wall Projections

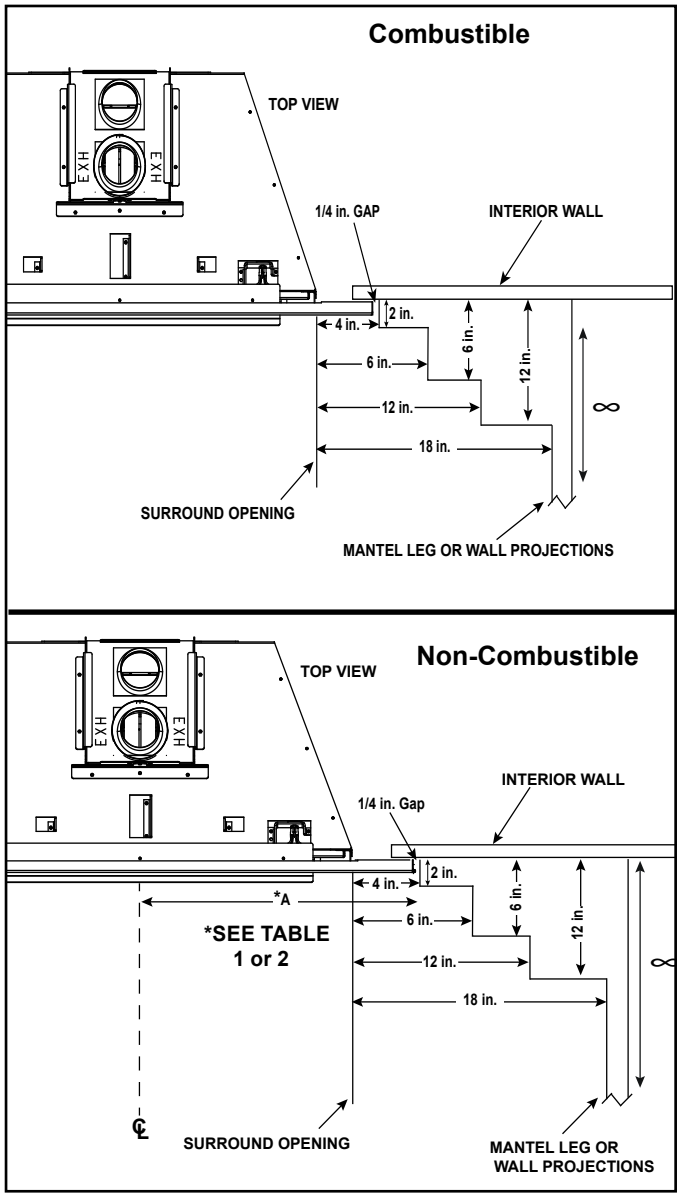

Figure 3.13 Clearances to Mantel Legs or Wall Projections (Acceptable on both sides of surround opening)

Mantels or Wall Projections - Non-Combustible

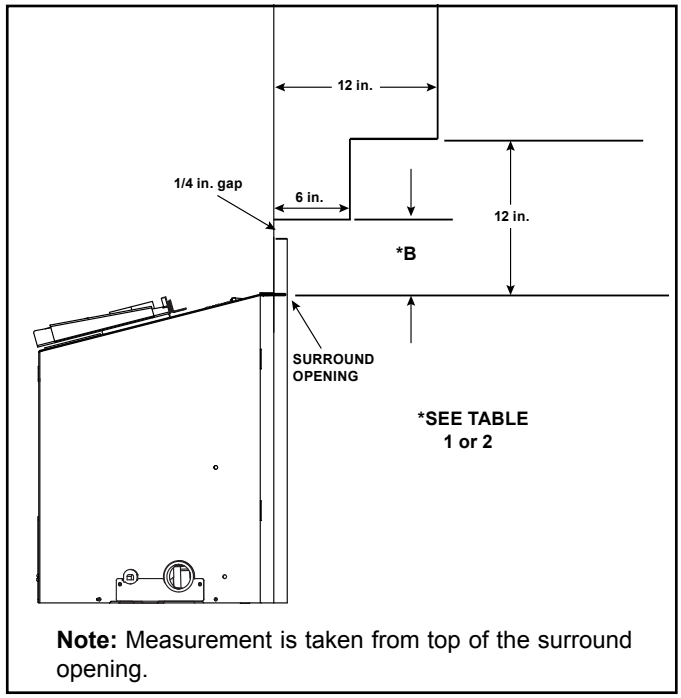

Note: Measurement is taken from top of the surround opening.

Figure 3.14 Minimum Vertical and Maximum Horizontal Dimensions- Non-Combustible

Unit Size	Surround Model	A	B
25 in.	MI25-3523	17-15/16 in.	6-1/16 in.
	MI25-3726	18-15/16 in.	9-1/16 in.
	MI25-3928	19-15/16 in.	11-1/16 in.
30 in.	MI30-4027	20-7/16 in.	6-9/16 in.
	MI30-4230	21-7/16 in.	9-9/16 in.
	MI30-4432	22-7/16 in.	11-9/16 in.
35 in.	MI35-4229	21-7/16 in.	5-1/16 in.
	MI35-4432	22-7/16 in.	8-1/16 in.
	MI35-4832	24-7/16 in.	8-1/16 in.

Table 1 Mantel Leg or Wall Projection Minimum Dimension needed when Installing a Standard Surround

Unit Size	Front Model	A	B
25 in.	INFIT	14-5/8 in.	1-1/4 in.
	CSFI, CASFI	16-1/16 in.	2-1/2 in
30 in.	INFIT	17-1/8 in.	1-1/4 in.
	CSFI, CASFI	18-9/16 in.	2-1/2 in
35 in.	INFIT	19-3/4 in.	1-1/4 in.
	CSFI, CASFI	21-1/16 in.	2-1/2 in

Table 2 Mantel Leg or Wall Projection Minimum Dimension needed when Installing a Custom Surround. Front Model Determines the Minimum Size of the Custom Surround

Note: All numbers in Tables 1 and 2 include the 1/4 in. gap on surround edge.

Mantels - Combustible

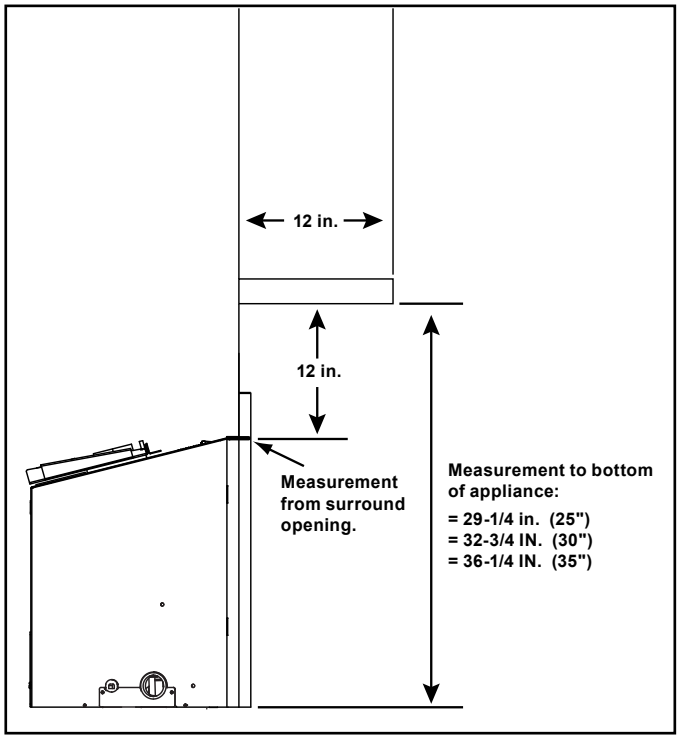

Figure 3.15 Minimum Vertical and Maximum Horizontal Dimensions - Combustible

E. Hearth Extension / Vinyl Flooring

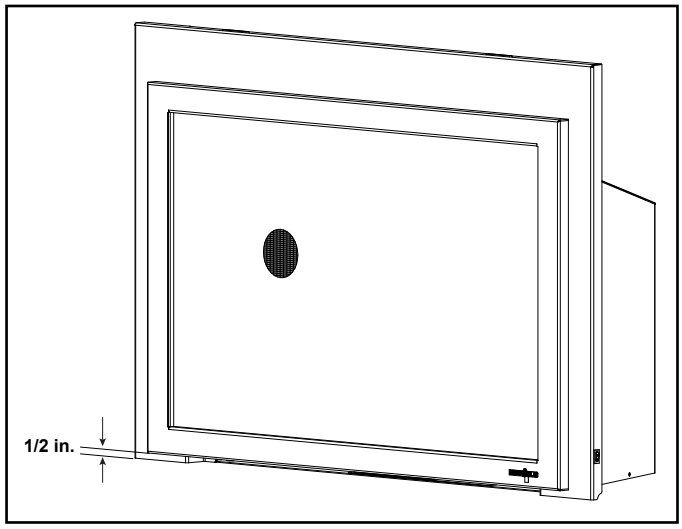

Figure 3.16 Minimum Required 1/2 in. Gap to Bottom of Front

- All flooring and hearth material must remain below the bottom of the surround. See Figure 3.17.
- Combustible flooring may be located in front of the appliance. See Figure 3.18 for vinyl flooring recommendations.
- 1/2 inch gap under the bottom of the front must be maintained. See Figure 3.16.
- A minimum 1/4 inch gap from the bottom of the appliance to the metal floor of the solid fuel firebox is **REQUIRED.** See side view in Figure 3.19.
- Combustible flooring underneath the appliance is acceptable with a 1/4 inch gap. See Figure 3.19.

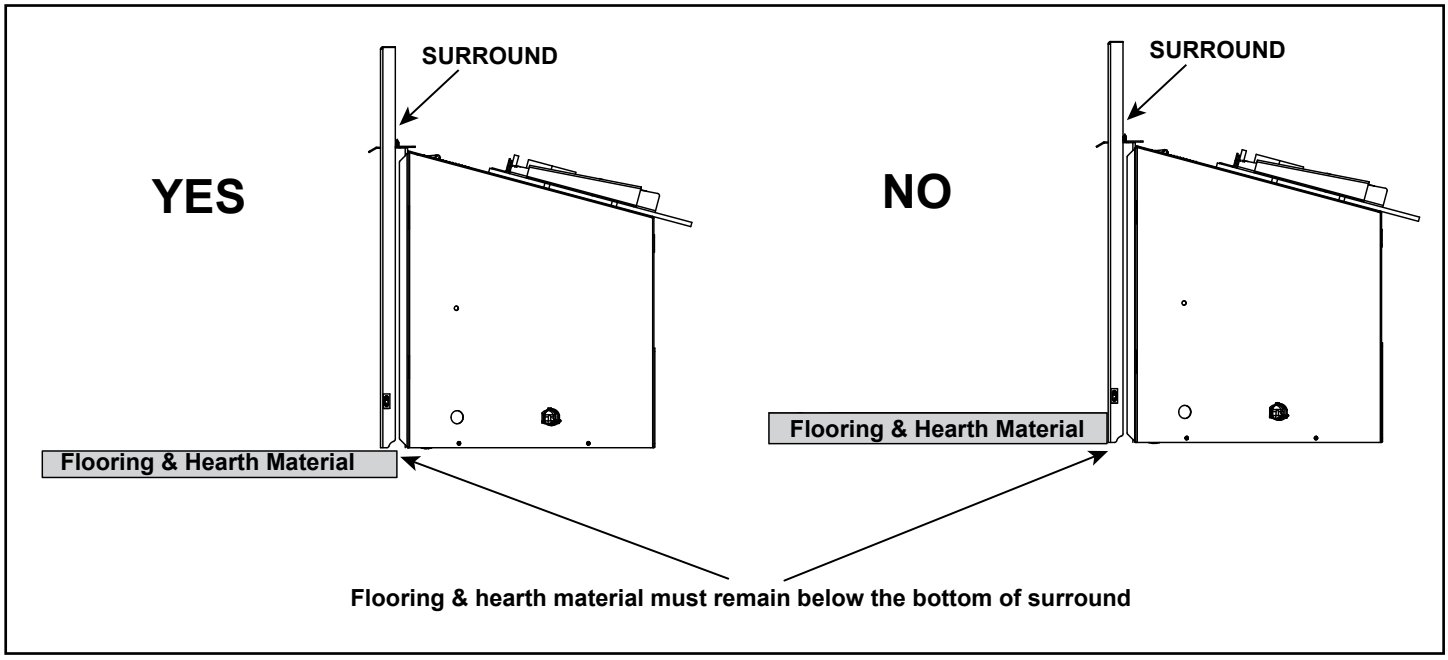

Figure 3.17 Flooring & Hearth Material

Vinyl Flooring

Vinyl flooring is sensitive to heat. To avoid damage to the vinyl flooring, a 12 inch minimum x 12 inch minimum hearth is recommended when using vinyl flooring up to the wall. See Figure 3.18. If no hearth is used, it is recommended to provide a minimum of 24 inches of clearance in front of the appliance to the vinyl flooring OR the bottom of the appliance should be raised a minimum of 24 inches off of the floor to allow the vinyl flooring to be installed up to the wall.

NOTICE: *Clearances that do not meet the minimum guidelines could result in damage or buckling to the vinyl flooring and is done at the installer's risk.*

Hearth and Home Technologies does not recommend adhesive based vinyl flooring products due to thermal expansion during operation. Floating style flooring can be used, but it will reach temperatures up to 110 °F (based on ambient temperature of 70 °F). Consult the manufacturer's flooring specifications to ensure compatibility.

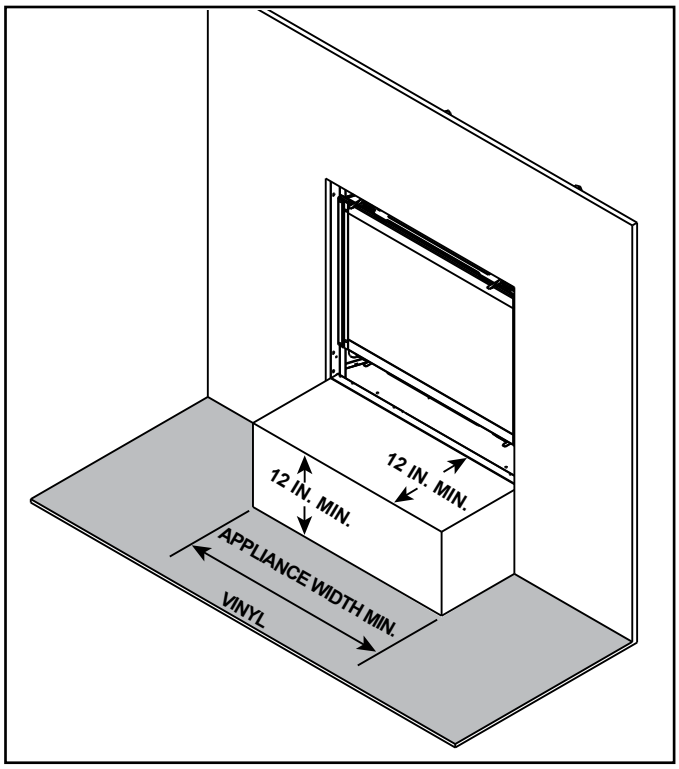

Figure 3.18 Vinyl Flooring Recommendations

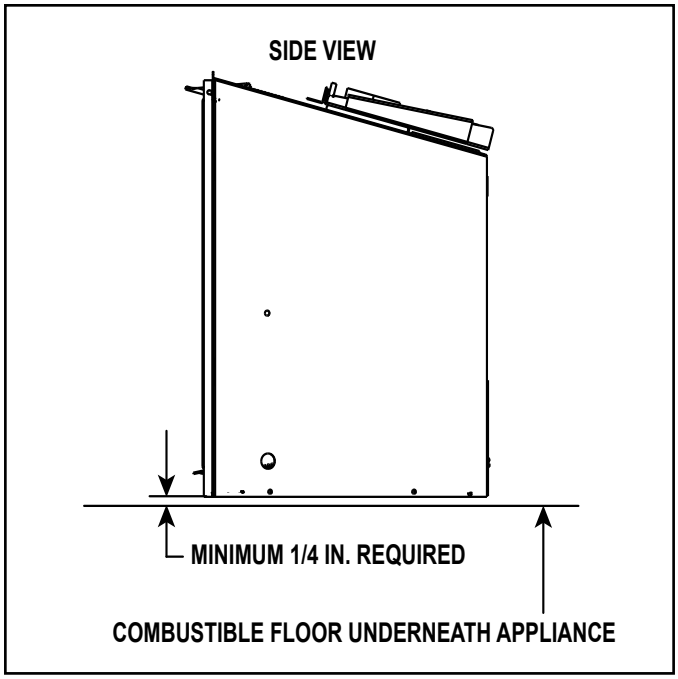

Figure 3.19 Solid Fuel Floor Clearance

4 Installation Preparation

Prepare the existing solid fuel masonry or factory built non-combustible firebox for installation.

A. Cleaning

Prior to installing the gas insert:

- Ensure that the woodburning fireplace cavity is clean and free of ash, soot, and other debris.

B. Flue Damper

Fully lock the solid fuel fireplace's flue damper in the open position, OR completely remove it.

C. Gas Line

Note: If the factory built fireplace has no gas access hole provided, an access hole of 1 inch (25 mm) diameter or less may be drilled through the lower sides or bottom of the firebox in a proper workmanship - like manner. This access hole must be plugged with non-combustible insulation after the gas supply line has been installed.

- If the gas access hole of the factory-built fireplace is not accessible or prohibits the installation due to its location, an access hole may be drilled through the lower side, back or bottom of firebox.
- The lower sides, back, or bottom is considered the lower half of the factory-built firebox.
- Install gas line to the factory provided flex line. See Figure 4.1.
- Check local codes and gas line sizing requirements following NFPA54. See Section 7.
- It is recommended that extra length of gas line be installed within the existing wood burner or masonry fireplace to allow removal of the insert for future servicing needs.

Figure 4.1

D. Fireplace Conversion Notice

The fireplace conversion notice is included in the appliance manual bag. Permanently attach the label with the following warning to the inside lower back of the fireplace firebox into which the insert is being installed. Silicone or mechanical fasteners may be required to properly secure the label.

WARNING! Risk of Fire! *This fireplace has been converted for use with a gas fireplace insert only and cannot be used for burning wood or solid fuels unless all original parts have been replaced, and the fireplace re-approved by the authority having jurisdiction.*

E. Electrical Outlet Box

An outlet box may be installed in a bottom back corner of the existing solid fuel masonry or factory-built fireplace to power the appliance. Each unit ships standard with a cord assembly to permit blowers or other optional accessories to be used. The accessories plug into the new outlet box or may be routed out onto the hearth to a nearby outlet.

NOTICE: DO NOT *wire 110-120 VAC to wall switch.*

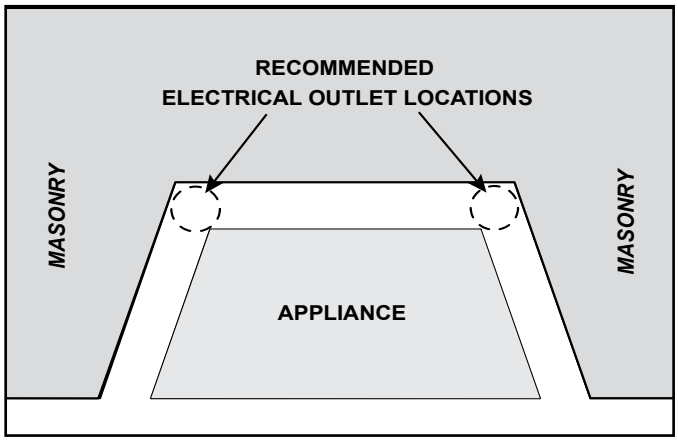

Figure 4.2 Electrical Outlet Detail

Appliance Cord Length (approximate)

Appliance Size	Left Side	Right Side
25 in.	10 ft. 6 in.	8 ft.
30 in.	10 ft. 3 in.	7 ft. 6 in.
35 in.	10 ft.	7 ft.

5 Installing Vent Pipe and Appliance

A. Vent Limits

The abbreviations listed in this vent table key are used in the vent diagrams.

Description
Minimum Vertical Run Length 10 ft.
Maximum Vertical Run Length 50 ft.

WARNING! Risk of Fire/Explosion/Asphyxiation! *Do NOT connect this gas appliance to a chimney flue serving a separate solid fuel or gas burning appliance.*

- *Could impair safe operation of this appliance or other appliances connected to the flue.*
- *Vent this appliance directly outside.*
- *Use separate vent system for this appliance.*

CAUTION! ALL vent specifications MUST be followed. *This product is tested and listed to these specifications. Appliance performance will suffer if specifications are not followed.*

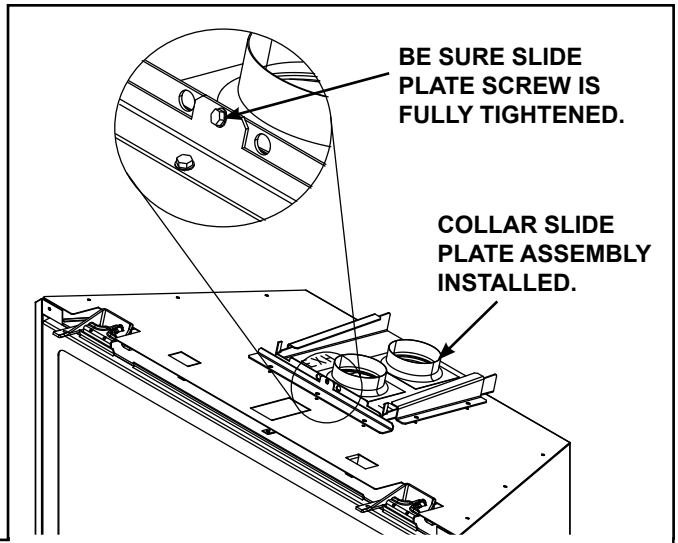

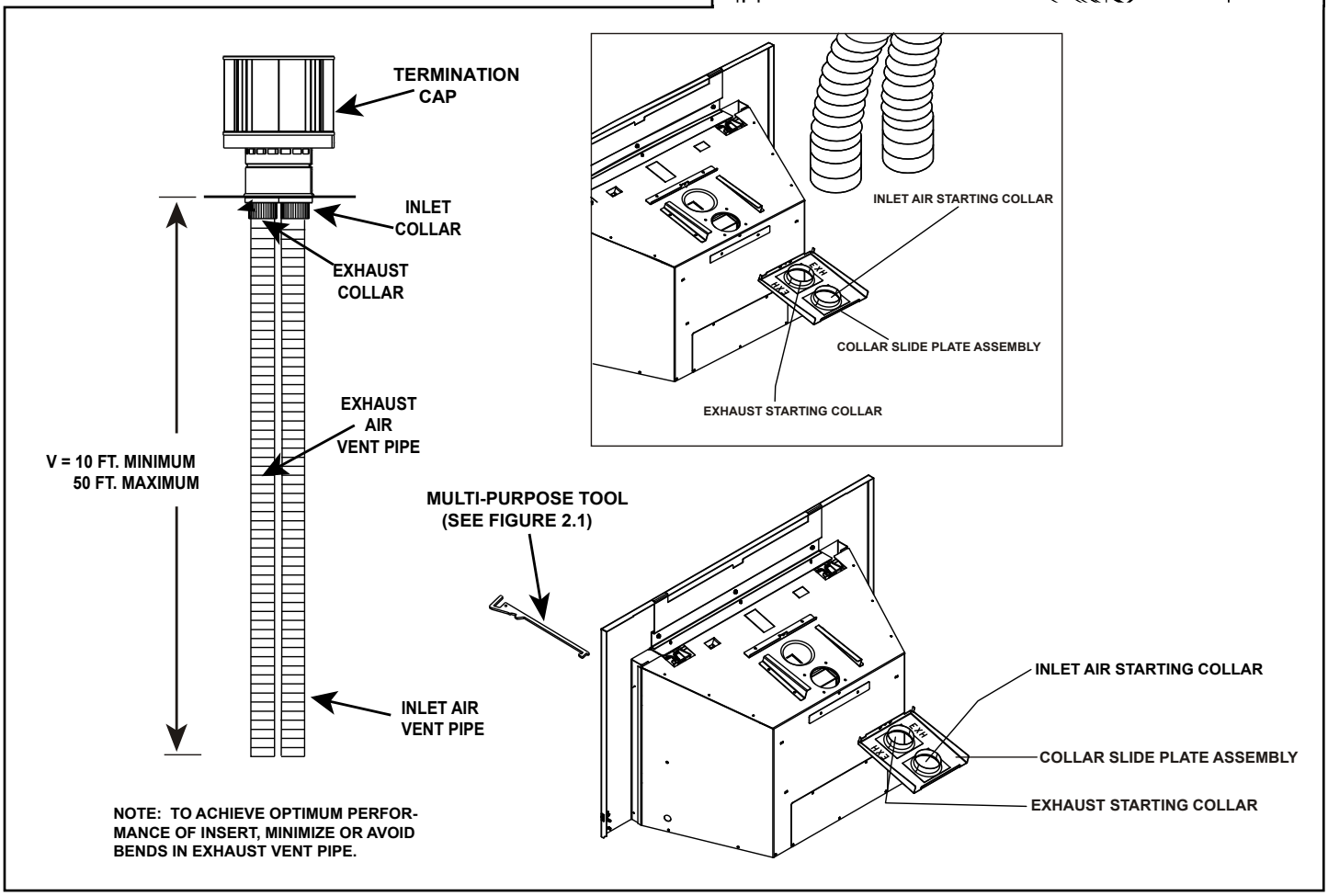

Figure 5.1

B. Using Vertical Restrictor

When 20-25+ feet of vertical venting is used, vertical restrictors will need to be adjusted. See Figure 5.2 and 5.3.

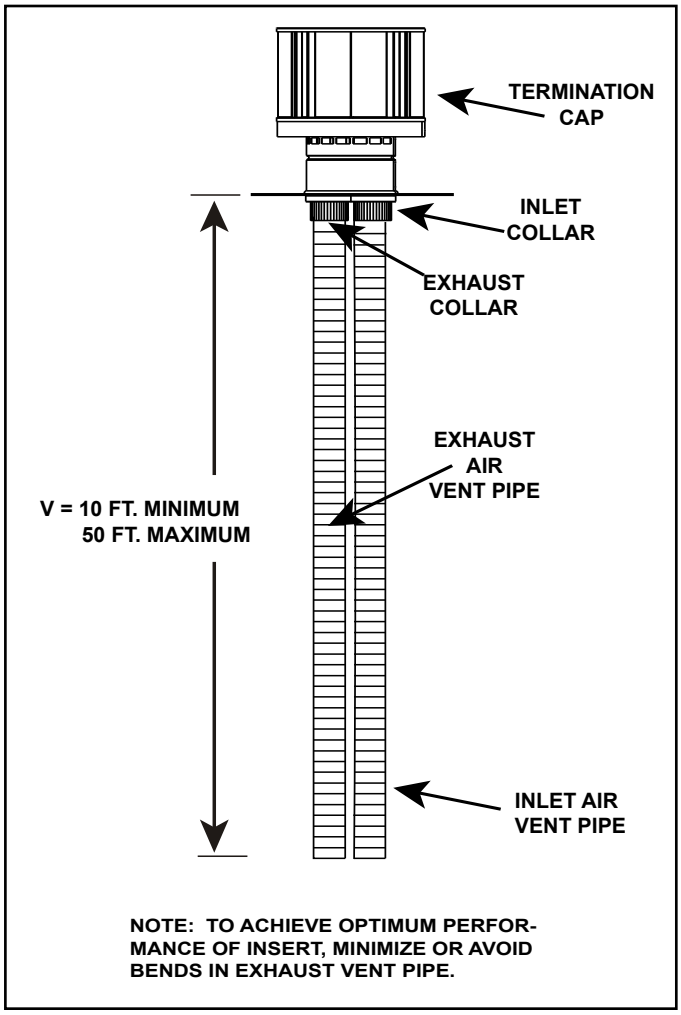

Figure 5.2 Min. / Max. Venting Requirement

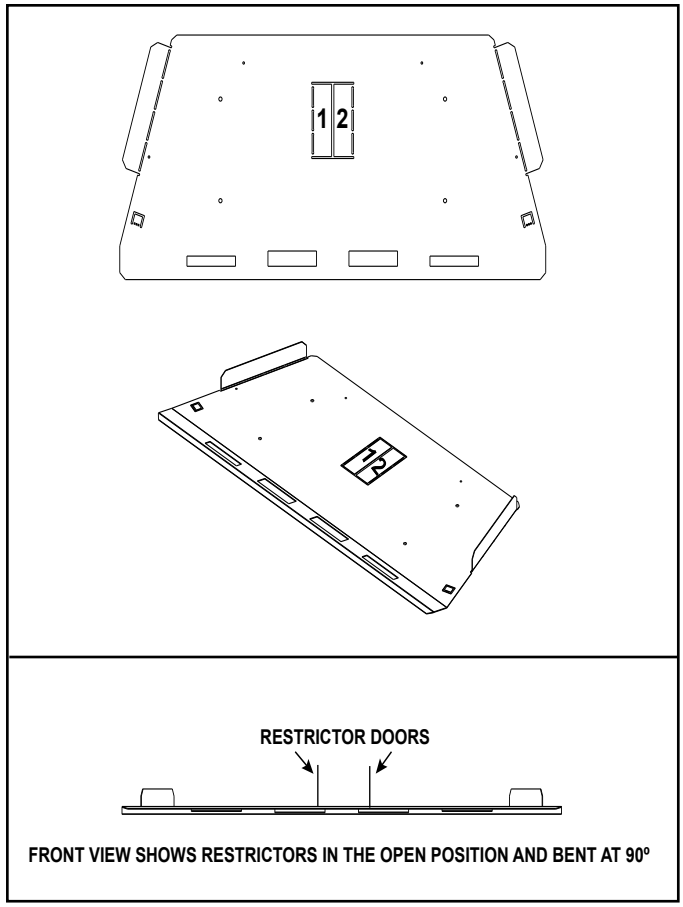

Figure 5.3 Firebox Baffle

To open restrictors, push the restrictor doors upward. The restrictor doors should be bent at a 90°. See Figure 5.3.

Opening restrictors will help reduce cold start or sooting issues (cycling).

Appliance - 25 in. & 30 in.

V=	10 ft. - 25 ft.	No adjustment needs to be done.
	26 ft. - 35 ft.	Open 1 restrictor opening.
	36 ft. - 50 ft.	Open both restrictor openings.

Appliance - 35 in.

V=	10 ft. - 20 ft.	No adjustment needs to be done.
	21 ft. - 35 ft.	Open 1 restrictor opening.
	36 ft. - 50 ft.	Open both restrictor openings.

C. Venting Components

CAUTION! Risk of Cuts/Abrasions/Flying Debris. *Wear protective gloves and safety glasses during installation. Sheet metal edges are sharp.*

The vertical vent termination system installed on this model includes:

- One length of 3-inch flexible vent pipe for exhaust air (included with vent kit).
- One length of 3-inch flexible vent pipe for combustion air (included with vent kit).
- One vertical termination cap (included with vent kit).

To prevent odors and cold air drafts, it may be necessary to place non-combustible insulation or field fabricated metal plates around the vent pipe flues as they go through the damper.

Note: The LINK-DV4-30B and LINKSQ-DV4-30 systems REQUIRE this insulation.

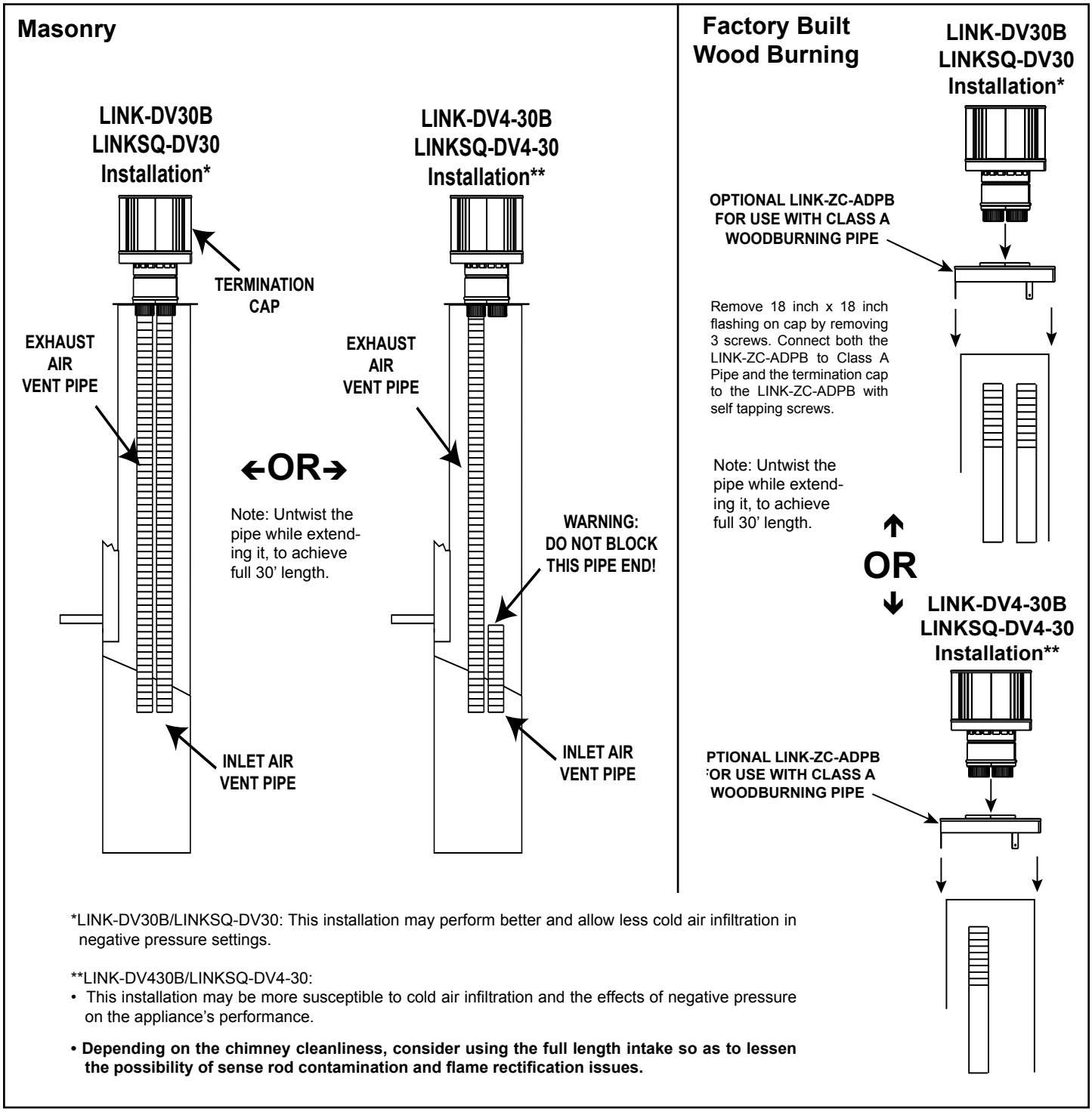

*LINK-DV30B/LINKSQ-DV30: This installation may perform better and allow less cold air infiltration in negative pressure settings.

**LINK-DV430B/LINKSQ-DV4-30:

- This installation may be more susceptible to cold air infiltration and the effects of negative pressure on the appliance's performance.
- **Depending on the chimney cleanliness, consider using the full length intake so as to lessen the possibility of sense rod contamination and flame rectification issues.**

Figure 5.4

D. Connecting to SLP

Terminating horizontally is not allowed.

Vertical terminations are measured to top of chimney.

This appliance is listed for use with LINK-DV systems and components only. It is permissible to extend venting above existing chimney (within specified maximum vertical limits) using SLP series 6-5/8 inch gas direct-vent pipe. Connection is made using DV-46DVA-GK.

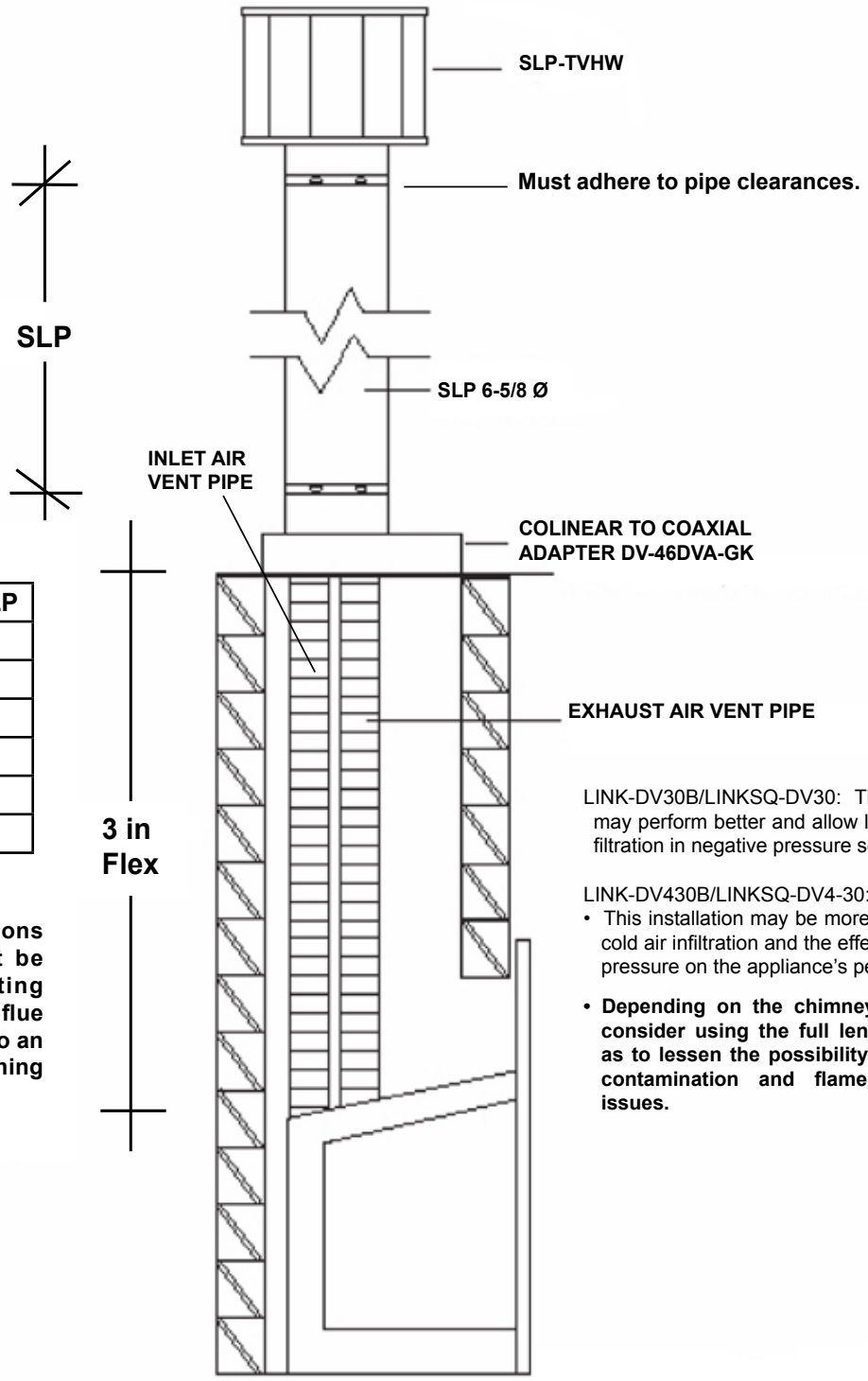

Flex	Min SLP
5 ft.	8 ft.
6 ft.	7 ft.
7 ft.	6 ft.
8 ft.	5 ft.
9 ft.	4 ft.
10 ft.	N/A

NOTE: **3 in. sections of flex pipe must be enclosed to existing masonry fireplace flue vent or installed into an existing wood burning vent system.**

LINK-DV30B/LINKSQ-DV30: This installation may perform better and allow less cold air infiltration in negative pressure settings.

LINK-DV430B/LINKSQ-DV4-30:

- This installation may be more susceptible to cold air infiltration and the effects of negative pressure on the appliance's performance.
- **Depending on the chimney cleanliness, consider using the full length intake so as to lessen the possibility of sense rod contamination and flame rectification issues.**

Four 45 degree elbows can be used in the vertical section of SLP venting to avoid structural members such as floor joist or trusses. Maximum total vent run is 50 ft. 90 degree elbows may NOT be used.

Up to four 45 degree elbows may be used as long as the minimum venting requirements are met per the above chart.

Figure 5.5 Optional SLP Venting Configuration - Vertical Termination

E. Connecting Vent Pipe

Reference instructions in the termination kit.

- Install the 3 in. flexible vent pipe(s) down through the chimney.
- Secure the exhaust flexible vent pipe to the exhaust starting collar on top of the appliance with three screws. See Figure 5.1.

  For best results in cold climate be sure 3 in. flex is flush and tight to the collar slide plate assembly. Seal with stove cement or aluminum foil tape. Do not use silicone.
- Use 3 screws to attach the section of inlet air vent to the inlet air starting collar on the collar slide plate assembly. See Figure 5.1. NOTE: The collar slide plate assembly may be removed from appliance to aid installation and service.

  For best results in cold climate be sure 3 in. flex is flush and tight to the collar slide plate assemby. Seal with stove cement or aluminum foil tape. Do not use silicone.

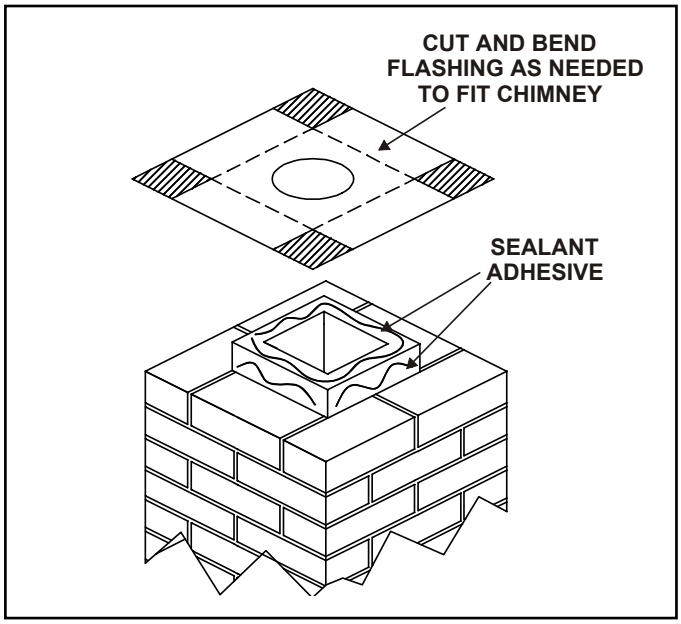

Figure 5.6

- Trim chimney top plate to minimize excess overhang or bend over flue tile. See Figure 5.6.
- Place 3/8 inch bead of **300 ºF minimum continuous exposure rating** silicone on flue tile top.

F. Placing, Securing and Leveling the Appliance

WARNING! Risk of Explosion/Combustion Fumes! *Connect vent sections per installation instructions.*

- *Connect exhaust vent pipe ONLY to exhaust starting collar and termination cap center collar.*
- *Connect inlet air vent ONLY to inlet air collar on appliance and either the termination cap inlet air collar OR terminate within chimney.*
- ***DO NOT** allow vent to sag below connection point to appliance.*
- Install insert (without surround attached) into existing fireplace while pulling collar slide plate assemby forward.
- Install gas line into hole provided on side. See Figure 5.7.
- Secure collar slide plate assemby to appliance by securing with #8 screw. See Figure 5.1.
- Level the appliance from side to side and front to back. Adjust leveling legs to desired vertical position so appliance is level. Use the leveling bolts included with the manual bag.
- Position any excess flexible vent pipe back up into chimney without sagging. Twist and push flex vent together to shorten.
- Attach surround. Follow instructions for surround installation included with the front.
- Push insert into the opening so that it tightly overlaps the fireplace opening.

WARNING! Risk of Fire! *Only an approved Hearth & Home Technologies surround may be used to cover integral grills on solid fuel burning fireplaces. No other components such as shrouds, sheetmetal plates, etc., may be used to seal off vents.*

WARNING! Risk of Explosion! *Failure to position the parts in accordance with these diagrams or failure to use only parts specifically approved with this appliance may result in property damage or personal injury.*

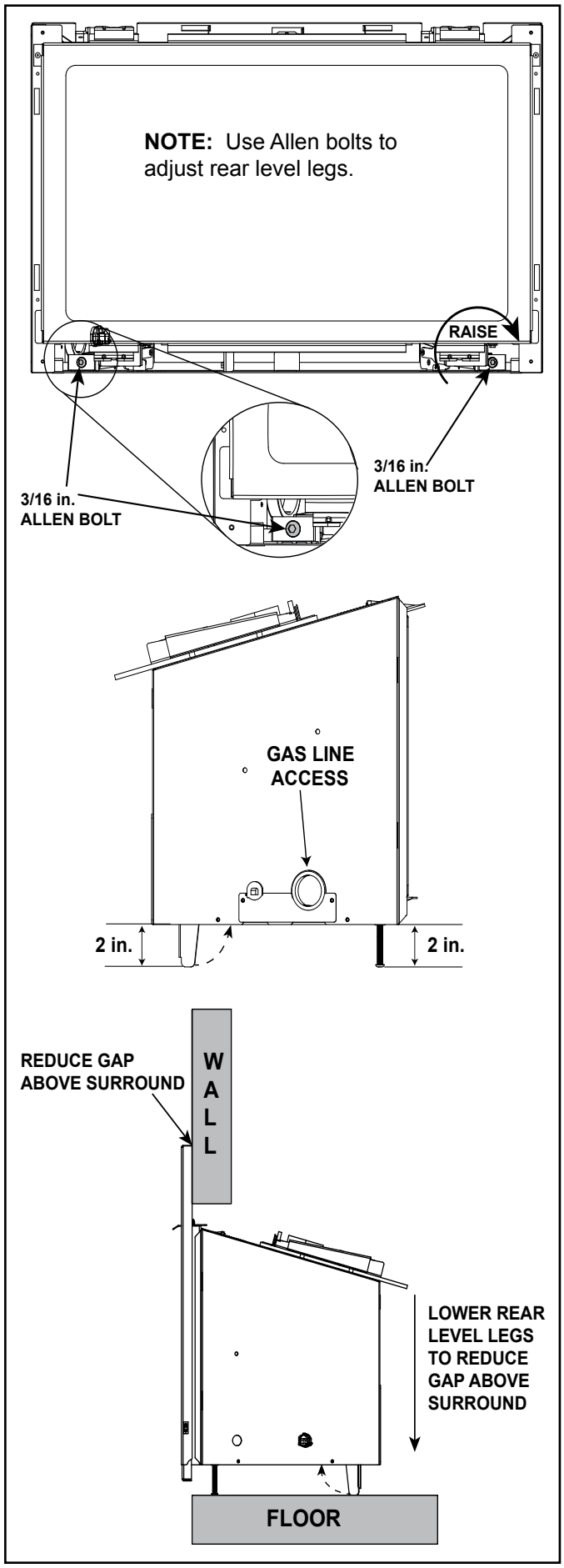

Figure 5.7 Leveling Leg Detail

G. Installing Termination Cap

⚠ WARNING

Fire Risk.

Maintain vent clearance to combustibles as specified.

- **DO NOT** pack air space with insulation or other materials.

Failure to keep insulation or other materials away from vent pipe may cause overheating and fire.

CAUTION! Risk of Cuts/Abrasions/Flying Debris. *Wear protective gloves and safety glasses during installation. Sheet metal edges are sharp.*

For installation of termination cap see minimum vent heights for various pitched roofs. See Figure 5.8.

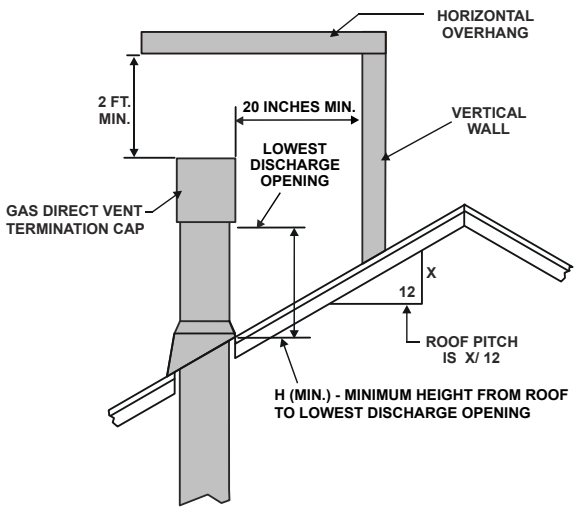

Roof Pitch	H (Min.) Ft.
Flat to 6/12	1.0*
Over 6/12 to 7/12	1.25*
Over 7/12 to 8/12	1.5*
Over 8/12 to 9/12	2.0*
Over 9/12 to 10/12	2.5*
Over 10/12 to 11/12	3.25

Roof Pitch	H (Min.) Ft.
Over 11/12 to 12/12	4.0
Over 12/12 to 14/12	5.0
Over 14/12 to 16/12	6.0
Over 16/12 to 18/12	7.0
Over 18/12 to 20/12	7.5
Over 20/12 to 21/12	8.0

* H minimum may vary depending on regional snowfall. Refer to local codes.

Figure 5.8 Minimum Height from Roof to Lowest Discharge Opening

6 Electrical Information

A. General Information

***WARNING! Risk of Shock or Explosion! DO NOT** wire 110-120 VAC to the valve or to the appliance wall switch. Incorrect wiring will damage controls.*

***NOTICE:** This appliance must be electrically wired and grounded in accordance with local codes or, in the absence of local codes, with* **National Electric Code ANSI/NFPA 70-latest edition** *or the* **Canadian Electric Code CSA C22.1.**

- This appliance comes with a 110-120 VAC cord assembly. This is required for proper operation of the appliance (IntelliFire Touch® Ignition). An outlet box may be installed in a bottom back corner of the existing solid fuel masonry or factory built fireplace to plug in the cord assembly, or the supplied power cord may be routed out onto the hearth to a nearby outlet.
- A 110-120 VAC circuit for this product must be protected with ground-fault circuit-interrupter protection, in compliance with the applicable electrical codes, when it is installed in locations such as in bathrooms or near sinks.
- Low voltage and 110-120 VAC voltage cannot be shared within the same wall box.
- In some instances, the spark ignition of the fireplace may cause intermittent, non-damaging, interference during the lighting sequence with a TV plugged into the same circuit. It is recommended that the fireplace and TV use different circuits to mitigate the interference potential. If interference is occurring on the same circuit, the use of surge protectors may help alleviate the interference.

***NOTICE: DO NOT** wire 110-120 VAC to wall switch.*

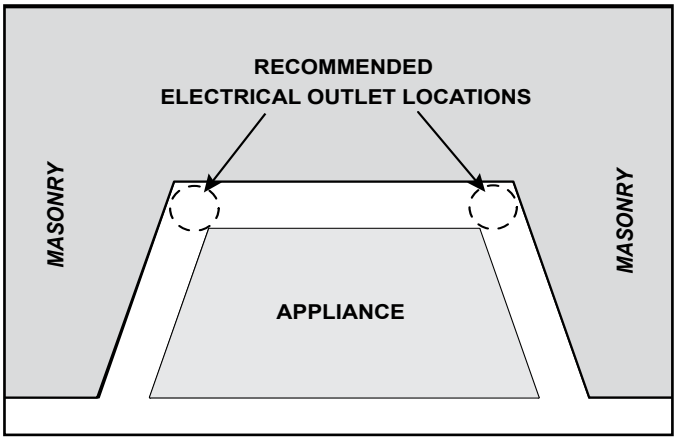

Figure 6.1 Electrical Outlet Detail

Appliance Cord Length (approximate)

Appliance Size	Left Side	Right Side
25 in.	10 ft. 6 in.	8 ft.
30 in.	10 ft. 3 in.	7 ft. 6 in.
35 in.	10 ft.	7 ft.

Electrical Service and Repair

***WARNING! Risk of Shock!** Label all wires prior to disconnection when servicing controls. Wiring errors can cause improper and dangerous operation. Verify proper operation after servicing.*

***WARNING! Risk of Shock!** Replace damaged wire with type 105 ºC rated wire. Wire must have high temperature insulation.*

- Refer to Service Parts section of appliance Owner's Manual for replacement part information.

Reset Switch

- A reset switch and USB-C battery plug are included with the appliance surround and should be attached to the side of the surround. See Installation instructions shipped with the appliance front.
- Reset switch must be installed and in the "ON" position for appliance to operate.

B. Wiring Requirements

IntelliFire Touch® Ignition System Wiring

***WARNING! Risk of Shock or Explosion! DO NOT** wire IPI controlled appliance power cord to a switched circuit. Incorrect wiring will override IPI safety lockout.*

- Refer to Figure 6.2, IntelliFire Touch (IPI) Wiring Diagram.
- This appliance is equipped with an IntelliFire control valve which operates on a 6 volt system.
- Ensure the 6 volt transformer is plugged into the supplied cord assembly to supply power to the unit OR install 4 AA cell batteries (not included) into the battery pack before use.
- Reset switch must be installed and in the "ON" position for appliance to operate.

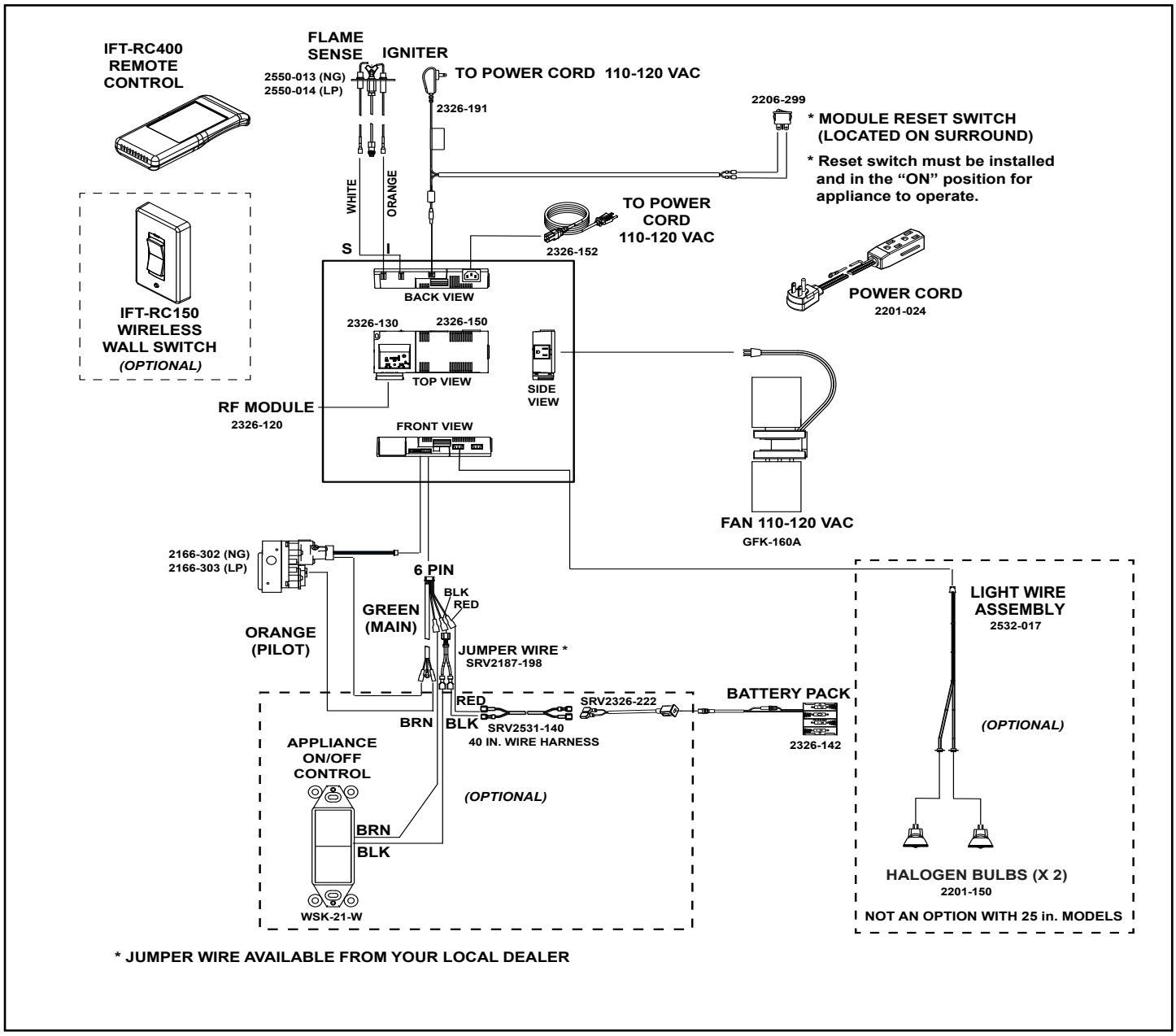

Figure 6.2 IntelliFire Touch Wiring Diagram

Battery Pack

Battery pack is not factory installed in appliances. See appliance manual bag for battery pack. Battery pack may be installed without batteries during normal operation.

When operating appliance under battery power, battery pack **MUST** be moved outside of the appliance.

NOTICE: *Batteries should only be used as a power source in the event of an emergency power outage. Batteries should not be used as a primary long-term power source. Battery polarity must be correct when installing batteries.*

DO not store batteries in the battery pack when the appliance is powered by the 6 volt transformer connected to permanent electrical service. Store battery pack in apppliance manual bag when not in use.

Halogen Lights (Optional)

Halogen lights are Optional.

Note: Not offered with 25 in. model.

C. Installation / Service for Fan

On units already installed, removal of decorative barrier front and gas insert may be required.

Option 1:

- Detach flexible liner from top of unit if insert is installed by removing the collar slide plate screw. See Figure 5.1.
- Remove the five screws on the rear cover plate. See Figure 6.3.
- Service / replace fan. Figure 6.2 shows a wiring diagram.
- Reinstall the rear cover plate back on the unit.
- Reattach flexible liner and replace collar slide plate screw. See Figure 5.1.

Note: See Section 9.B for fan and fan dampener placement.

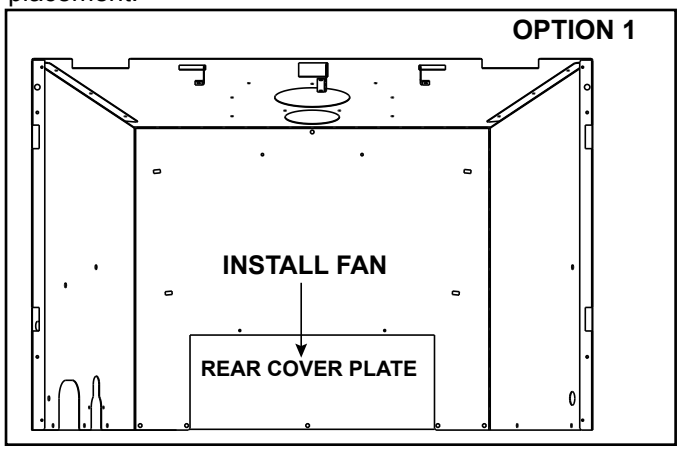

Figure 6.3 Cover Plate Removed (Option 1)

Option 2:

- Remove appliance front, glass, logs, base pan assembly, burner assembly and valve plate assembly. See Figure 6.4.
- Service / install fan. Figure 6.2 shows a wiring diagram.
- Reinstall valve plate assembly, burner assembly, base pan assembly, logs and appliance glass and front.

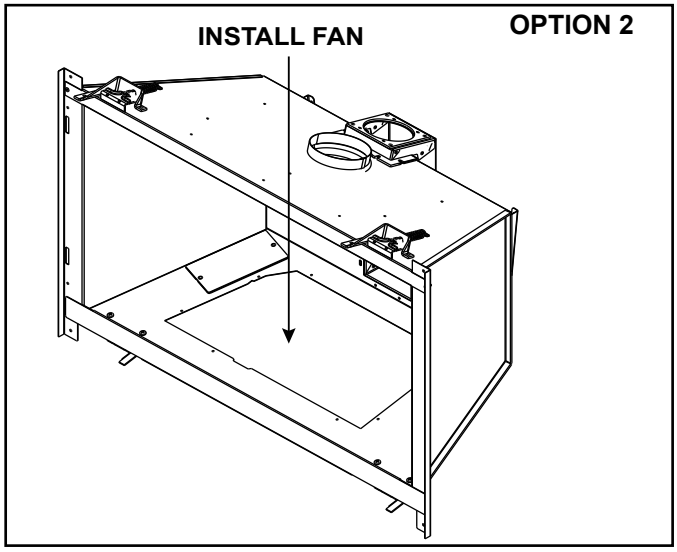

Figure 6.4 Through Valve Plate Opening (Option 2)

D. Installation / Service for Halogens

On units already installed, removal of decorative front and gas insert may be required.

Option 1:

- Detach flexible liner from top of unit if insert is installed by removing the collar slide plate screw. See Figure 5.1.
- Remove the five screws on the rear cover plate. See Figure 6.5.
- Service / replace halogens. Figure 6.2 shows a wiring diagram.
- Reinstall the rear cover plate back on the unit.
- Reattach flexible liner and replace collar slide plate screw. See Figure 5.1.

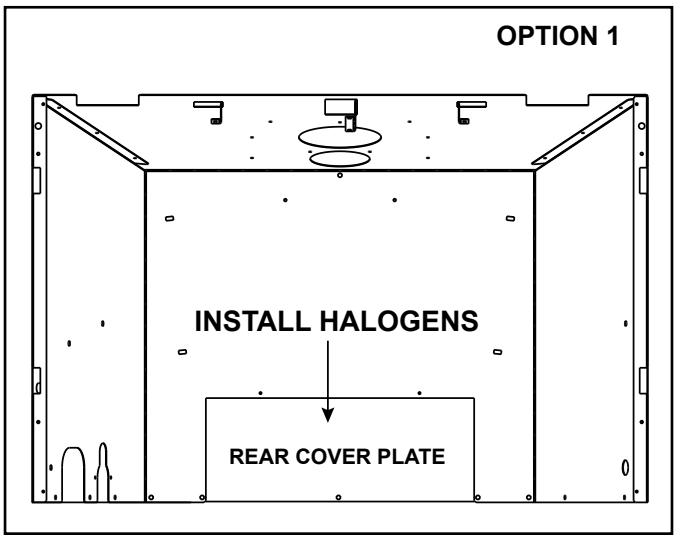

Figure 6.5 Cover Plate Removal (Option 1)

Option 2:

- Remove appliance front, glass, logs, base pan assembly, burner assembly and valve plate assembly. See Figure 6.6.
- Service / replace halogens. Figure 6.2 shows a wiring diagram.
- Reinstall valve plate assembly, burner assembly, base pan assembly, logs and appliance glass and front.

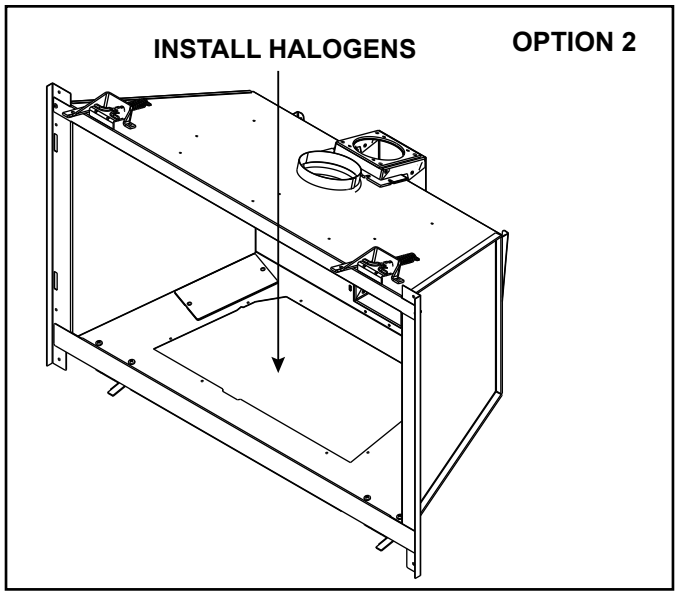

Figure 6.6 Through Valve Plate Opening (Option 2)

7 Gas Information

A. Fuel Conversion

- Make sure the appliance is compatible with available gas types.
- Conversions must be made by a qualified service technician using Hearth & Home Technologies specified and approved parts.
- Reference the following diagrams for gas shut off detail and component access.
- Reference Section 9.A to remove fixed glass assembly.

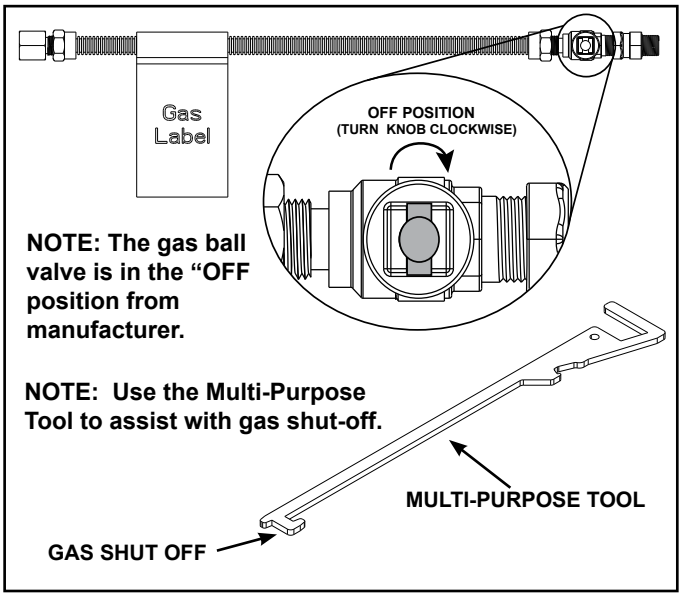

Figure 7.1 Gas Shut-off

- Use multi-purpose tool to assist with gas shutoff. See Figure 7.1. The gas ball valve is in the "OFF" position from manufacturer.
- Glass clip assemblies can be removed for additional component accessibility.

NOTE: Bottom right glass clip on 25 inch models must be removed to gain access to controls.

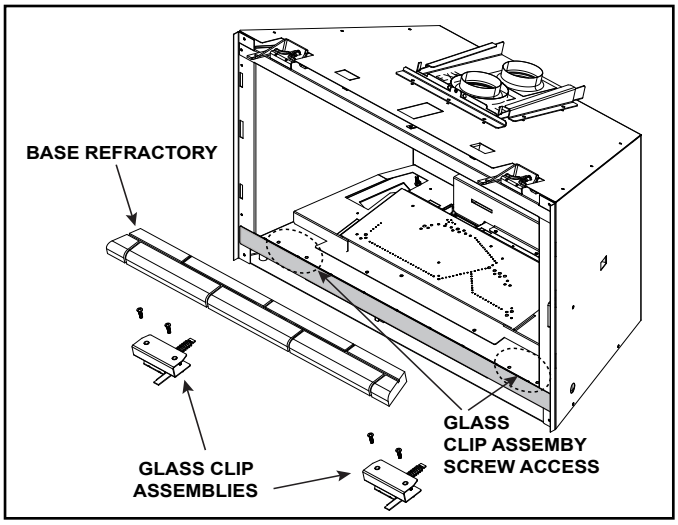

Figure 7.2 Glass Clip Assembly Removal

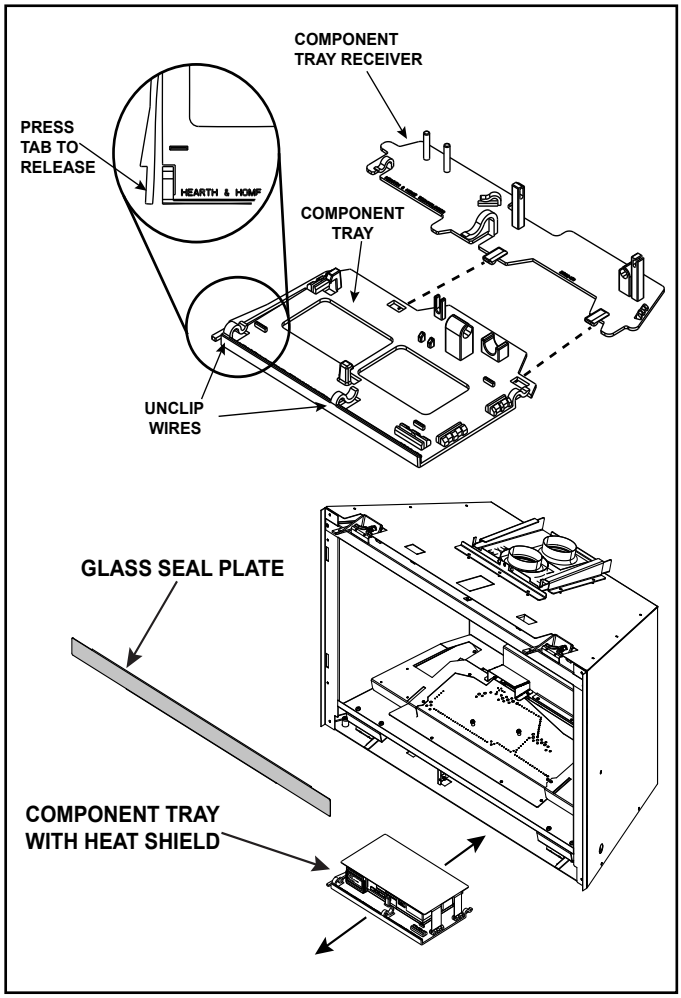

Figure 7.3 Component Tray

WARNING! Glass seal plate must be properly installed. Risk of elevated component temps and carbon monoxide exposure.

CAUTION: *Be sure to reinstall the component heat shield before firing the appliance. Components will overheat without heat shield.*

CAUTION: *Any wires removed from the wire clips during appliance installation or service must be re-installed in the wire clips.*

B. Gas Pressure

- Optimum appliance performance requires proper input pressures.
- Gas line sizing requirements will be determined in ANSI Z223.1 National Fuel Gas Code in the USA and CAN/CGA B149 in Canada.
- Pressure requirements are:

Gas Pressure	Natural Gas	Propane
Minimum inlet pressure	5.0 in. w.c.	11.0 in. w.c.
Maximum inlet pressure	10.0 in. w.c.	13.0 in. w.c.
Manifold pressure	3.5 in. w.c.	10.0 in. w.c.

WARNING! Risk of Fire or Explosion! *High pressure will damage valve. Low pressure may cause explosion.*

- Verify inlet pressures. Verify minimum pressures when other household gas appliances are operating.
- Install regulator upstream of valve if line pressure is greater than 1/2 psig.

⚠ WARNING

Fire Risk.

Explosion Hazard.

High pressure will damage valve.

- Disconnect gas supply piping BEFORE pressure testing gas line at test pressures above 1/2 psig.
- Close the manual shutoff valve BEFORE pressure testing gas line at test pressures equal to or less than 1/2 psig.

Note: Have the gas supply line installed in accordance with local codes, if any. If not, follow ANSI Z223.1. Installation should be done by a qualified installer approved and/or licensed as required by the locality. (In the Commonwealth of Massachusetts installation must be performed by a licensed plumber or gas fitter).

Note: A listed (and Commonwealth of Massachusetts approved) 1/2 in. (13 mm) T-handle manual shut-off valve and flexible gas connector are connected to the 1/2 in. (13 mm) control valve inlet.

- **If substituting for these components, please consult local codes for compliance.**

C. Gas Connection

- Refer to Reference Section 3 for location of gas line access in appliance.
- The gap between supply piping and gas access hole may be caulked with caulk with a minimum of 300 ºF continuous exposure rating or stuffed with non-combustible, unfaced insulation to prevent cold air infiltration.
- Ensure that gas line does not come in contact with outer wrap of the appliance. Follow local codes.
- Pipe incoming gas line to the factory supplied flex line. See Figure 7.4.
- Connect incoming gas line to the 1/2 in. (13 mm) connection on manual shutoff valve.

WARNING! Risk of Fire or Explosion! *Support control when attaching pipe to prevent bending gas line.*

- A small amount of air will be in the gas supply lines.

WARNING! Risk of Fire or Explosion! *Gas build-up during line purge could ignite.*

- *Purge should be performed by qualified service technician.*
- *Ensure adequate ventilation.*
- *Ensure there are no ignition sources such as sparks or open flames.*

Light the appliance. It will take a short time for air to purge from lines. When purging is complete the appliance will light and operate normally.

WARNING! Risk of Fire, Explosion or Asphyxiation! *Check all fittings and connections with a non-corrosive commercially available leak-check solution.* ***DO NOT*** *use open flame. Fittings and connections could have loosened during shipping and handling.*

WARNING! Risk of Fire! DO NOT *change valve settings. This valve has been preset at the factory.*

Figure 7.4

D. High Altitude Installations

NOTICE: *If the heating value of the gas has been reduced, these rules do not apply. Check with your local gas utility or authorities having jurisdiction.*

When installing above 2000 feet elevation:

- In the USA: Reduce input rate 4% for each 1000 feet above 2000 feet.
- In CANADA: Input ratings are certified without a reduction of input rate for elevations up to 4500 feet (1370 m) above sea level. Please consult provincial and/or local authorities having jurisdiction for installations at elevations above 4500 feet (1370 m)

Check with your local gas utility to determine proper orifice size.

E. Air Shutter Setting

Air shutter settings should be adjusted by a qualified service technician at the time of installation. The air shutter is set at the factory for minimum vertical vent run. Adjusting air shutter may be desired for longer vent runs. See Figure 7.5.

NOTICE: *If sooting occurs, provide more air by opening the air shutter.*

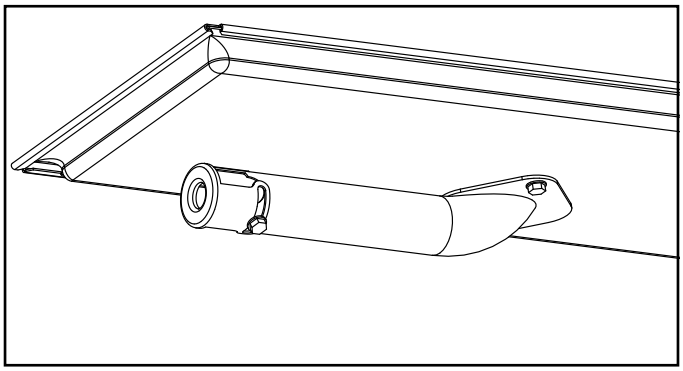

Figure 7.5 Air Shutter

Air Shutter Settings

RUBY25IN	**1/4 in.**
RUBY30IN	**1/2 in.**
RUBY35IN	**3/8 in.**
RUBY25IL	**1/2 in.**
RUBY30IL	**Full Open**
RUBY35IL	**Full Open**

F. Service / Replace Appliance Gas Valve

- See Figure 7.6.
- Remove appliance front, glass, logs, base pan assembly, burner assembly and valve plate assembly. See Figure 7.6.
- Service/Replace gas valve.
- Reinstall valve plate assembly, burner assembly, base pan assembly, logs and appliance glass and front.

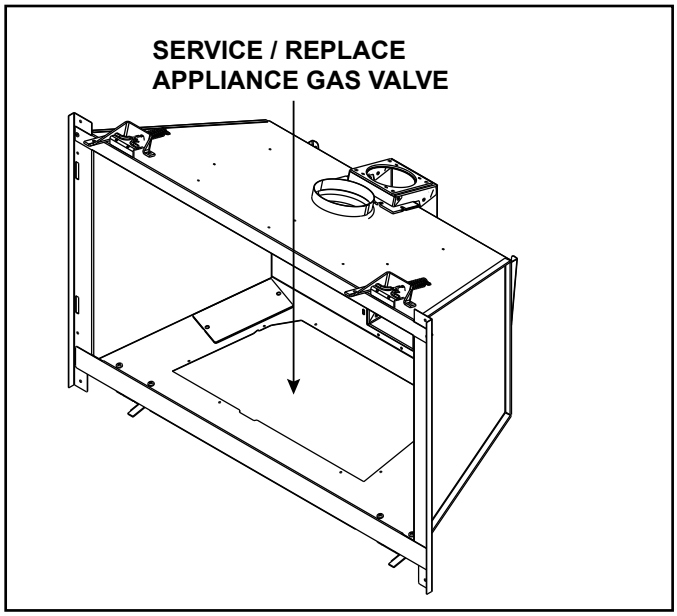

Figure 7.6 Gas Valve Detail

8 Finishing

A. Mantel, Wall Projections & Hearth Extensions

WARNING! Risk of Fire! *Comply with all minimum clearances to combustibles as specified. Framing or finishing material closer than the minimums listed must be constructed entirely of noncombustible materials (i.e., steel studs, concrete board, etc).*

Clearance to combustible material under the insert is 1/4 inch (6 mm).

- *Use leveling legs to raise insert minimum 1/4 inch (6 mm) above combustible material or outer wrap of factory built firebox.*

Combustible facings must not extend behind the insert surround. For non-combustible material specifications refer to Section 1.E and 1.F.

Mantel Legs or Wall Projections

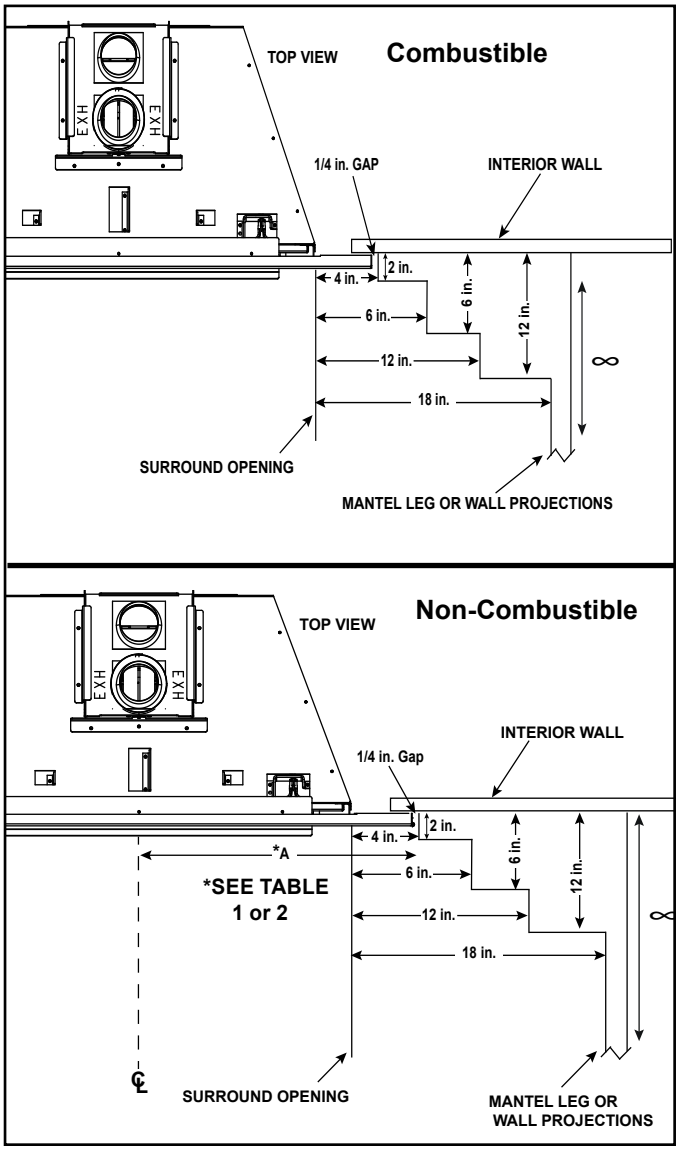

Figure 8.1 Clearances to Mantel Legs or Wall Projections (Acceptable on both sides of surround opening)

Mantels or Wall Projections - Non-Combustible

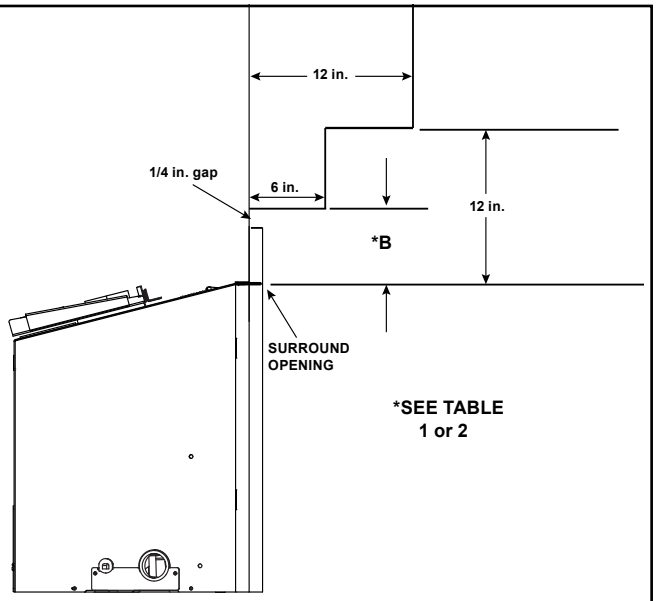

Note: Measurement is taken from top of the surround opening.

Figure 8.2 Minimum Vertical and Maximum Horizontal Dimensions- Non-Combustible

Unit Size	Surround Model	A	B
25 in.	MI25-3523	17-15/16 in.	6-1/16 in.
	MI25-3726	18-15/16 in.	9-1/16 in.
	MI25-3928	19-15/16 in.	11-1/16 in.
30 in.	MI30-4027	20-7/16 in.	6-9/16 in.
	MI30-4230	21-7/16 in.	9-9/16 in.
	MI30-4432	22-7/16 in.	11-9/16 in.
35 in.	MI35-4229	21-7/16 in.	5-1/16 in.
	MI35-4432	22-7/16 in.	8-1/16 in.
	MI35-4832	24-7/16 in.	8-1/16 in.

Table 1 Mantel Leg or Wall Projection Minimum Dimension needed when Installing a Standard Surround

Unit Size	Front Model	A	B
25 in.	INFIT	14-5/8 in.	1-1/4 in.
	CSFI, CASFI	16-1/16 in.	2-1/2 in
30 in.	INFIT	17-1/8 in.	1-1/4 in.
	CSFI, CASFI	18-9/16 in.	2-1/2 in
35 in.	INFIT	19-3/4 in.	1-1/4 in.
	CSFI, CASFI	21-1/16 in.	2-1/2 in

Table 2 Mantel Leg or Wall Projection Minimum Dimension needed when Installing a Custom Surround. Front Model Determines the Minimum Size of the Custom Surround

Note: All numbers in Tables 1 and 2 include the 1/4 in. gap on surround edge.

Mantels - Combustible

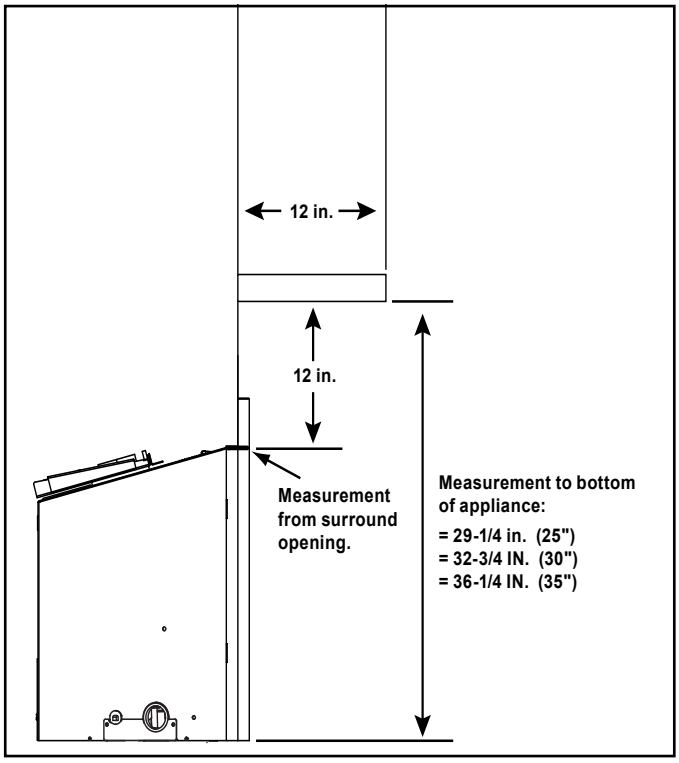

Figure 8.3 Minimum Vertical and Maximum Horizontal Dimensions - Combustible

B. Hearth Extension

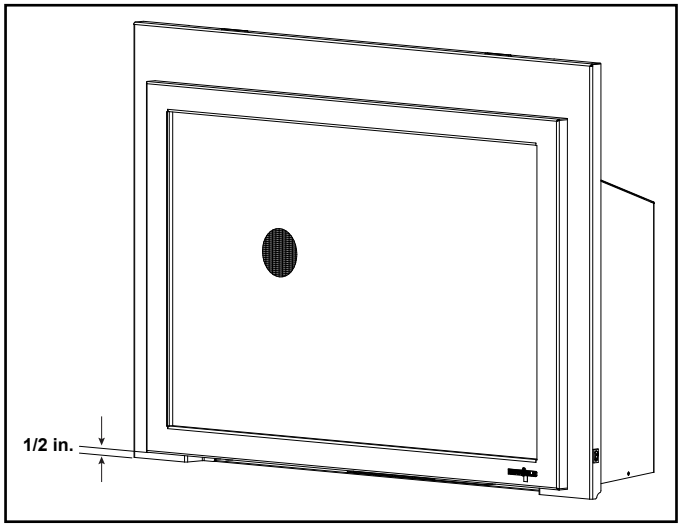

Figure 8.4 Minimum Required 1/2 in. Gap

- All flooring and hearth material must remaln below the bottom of the surround. See Figure 8.5.
- Combustible flooring may be located in front of the appliance. Exception - no vinyl / adhesive flooring. See Figure 8.6.
- 1/2 inch gap under the bottom of the front must be maintained. See Figure 8.4.
- A minimum 1/4 inch gap from the bottom of the appliance to the metal floor of the solid fuel firebox is **REQUIRED.** See side view in Figure 8.7.
- Combustible flooring underneath the appliance is acceptable with a 1/4 inch gap. See Figure 8.7.

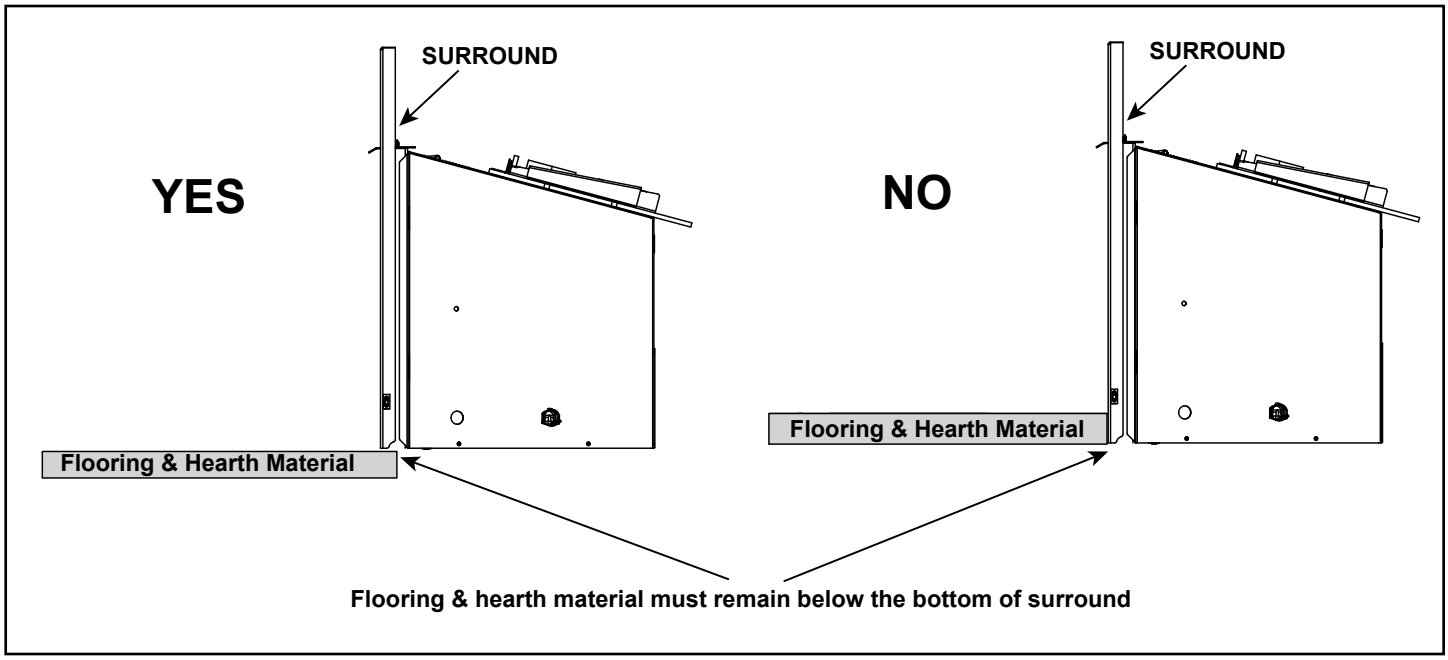

Figure 8.5 Flooring & Hearth Material

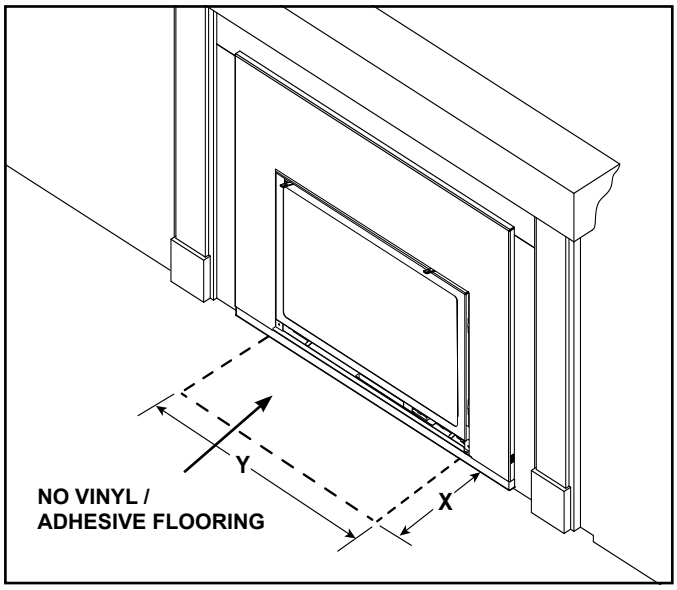

Figure 8.6 Hearth - Combustible Material Exception

Vinyl / Adhesive Flooring - Minimums

Appliance Size	Depth (X)	Width (Y)
25 in.	16 in	25-3/4 in.
30 in.	16 in	30-3/4 in.
35 in.	16 in	35-3/4 in.

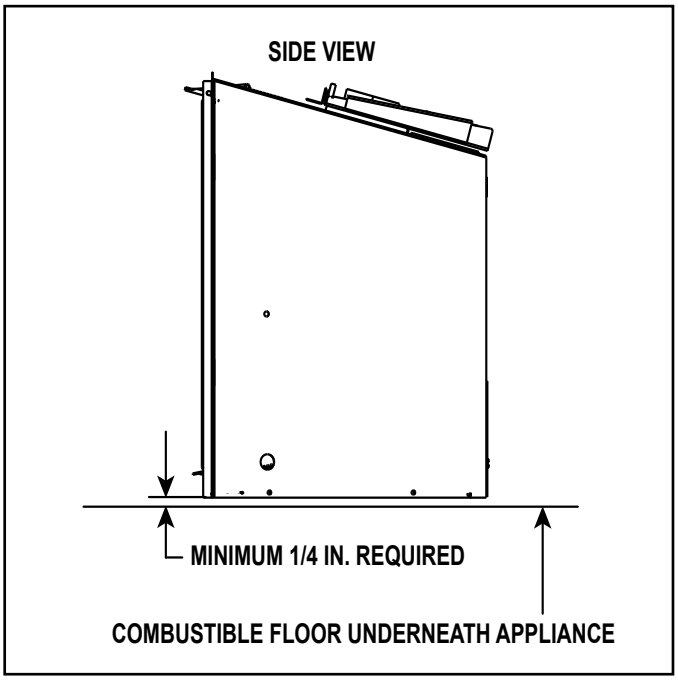

Figure 8.7 Solid Fuel Floor Clearance

9 Appliance Setup

A. Fixed Glass Assembly

WARNING! Risk of Asphyxiation! *Handle fixed glass assembly with care. Inspect the gasket to ensure it is undamaged and inspect the glass for cracks, chips or scratches.*

- ***DO NOT*** *strike, slam or scratch glass.*
- ***DO NOT*** *operate fireplace with glass removed, cracked, broken or scratched.*
- *Replace as a complete assembly.*

Removing Fixed Glass Assembly

CAUTION! Handle fixed glass assembly with care. *Glass is breakable.*

- *Avoid striking, scratching or slamming glass*
- *Avoid abrasive cleaners*
- ***DO NOT*** *clean glass while it is hot*

- The glass assembly fastens to the fireplace in four places. Four of the fastening mechanisms are spring-loaded glass latches. An example of the glass latch is shown in Figure 9.2.
- To release glass assembly, use the supplied multi-purpose tool (Figure 9.1) to pull the two bottom spring-loaded latches forward and allow them to retract away from the glass assembly. Tilt the bottom of the glass assembly outward until the top latches disengage.

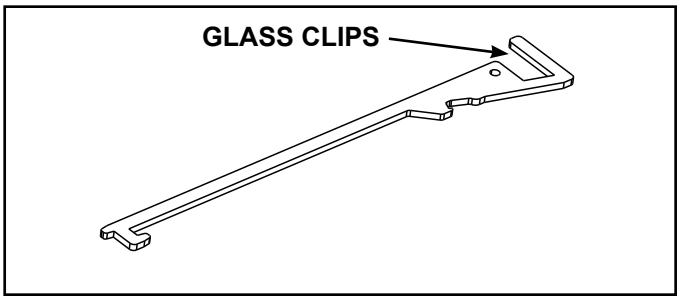

Figure 9.1 Multi-PurposeTool

Replacing Fixed Glass Assembly

- Tilt the top of the glass assembly toward fireplace and slide glass assembly upward to engage top latches. Verify top latches are fully engaged and then fasten the two bottom latches using the supplied multi-purpose tool.
- Reinstall door or decorative barrier front.

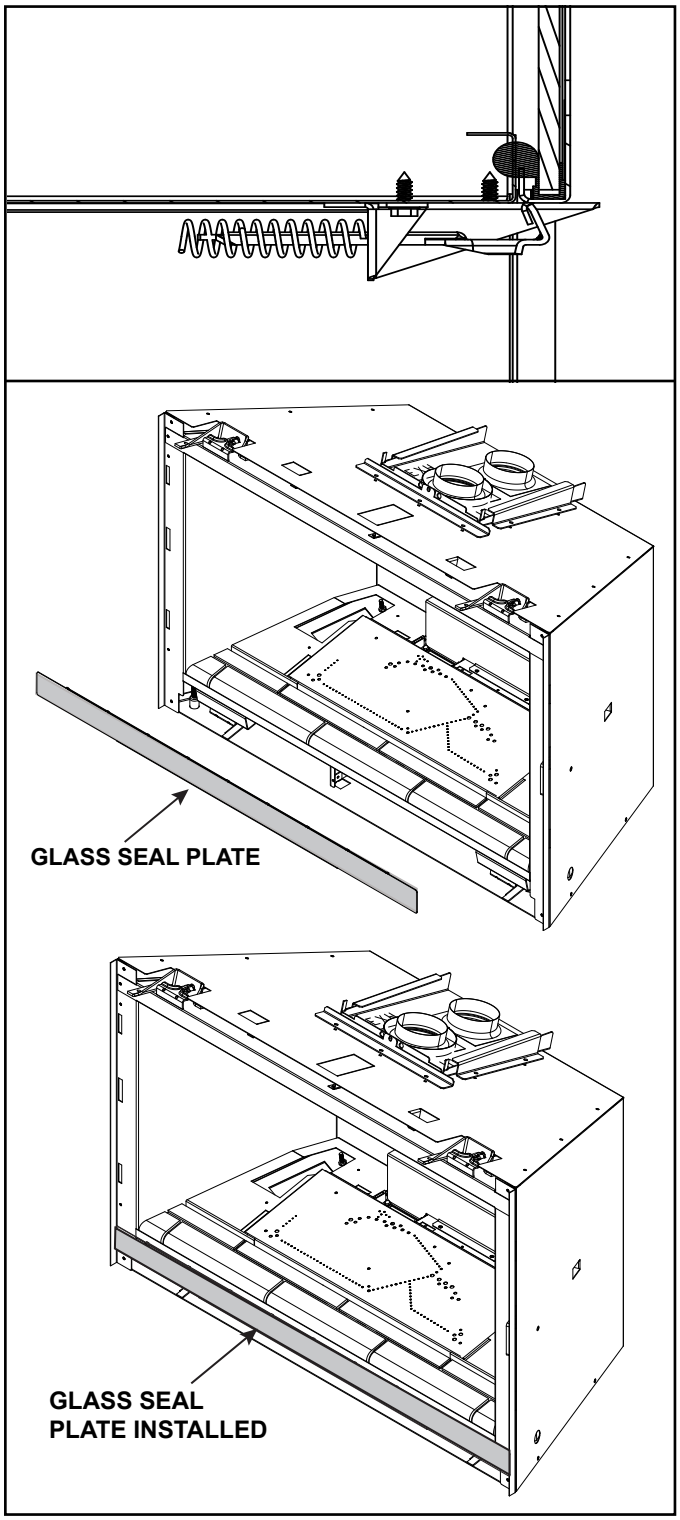

Figure 9.2 Glass Seal Plate

WARNING! Glass seal plate must be properly installed. Risk of elevated component temps and carbon monoxide exposure.

Note: Appliance is shipped with glass seal plate in the installed position.

B. Remove the Shipping Materials

Remove shipping materials from inside or underneath the firebox.

Note: Remove the zip ties from the appliance that hold the electrical cord, gas flexline and multi-purpose tool in place for shipping.

Remove Shipping Screws

NOTICE: *Remove shipping screws to reduce the noise created from fan vibration.*

1. Remove the two shipping screws from the back cover plate as illustrated in Figure 9.3, Detail A.

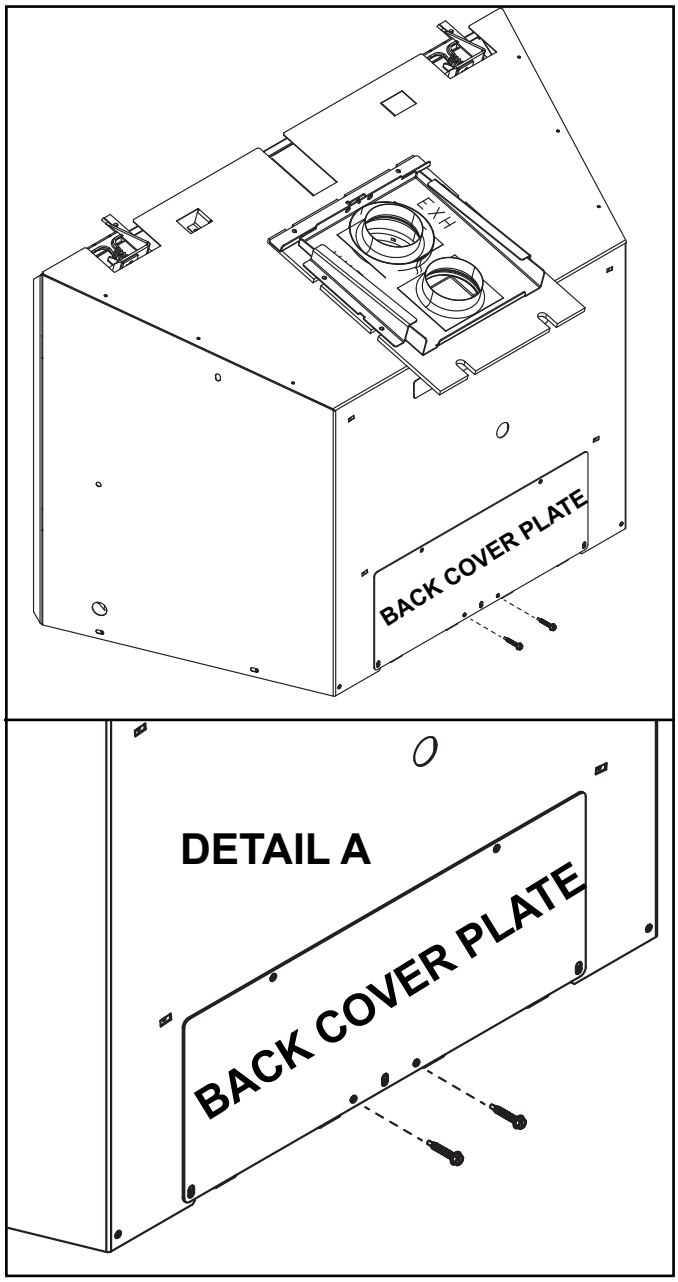

Figure 9.3 Remove Shipping Screws

2. When servicing or replacing a fan, note the location of the fan and fan dampener as shown in Figure 9.4. The fan dampener will be located under the fan. The gap between the back of the outer wrap and the fan should be between 1/16 inch and 1/8 inch as shown in Figure 9.4, Detail B. Additionally, the fan should not touch the firebox.

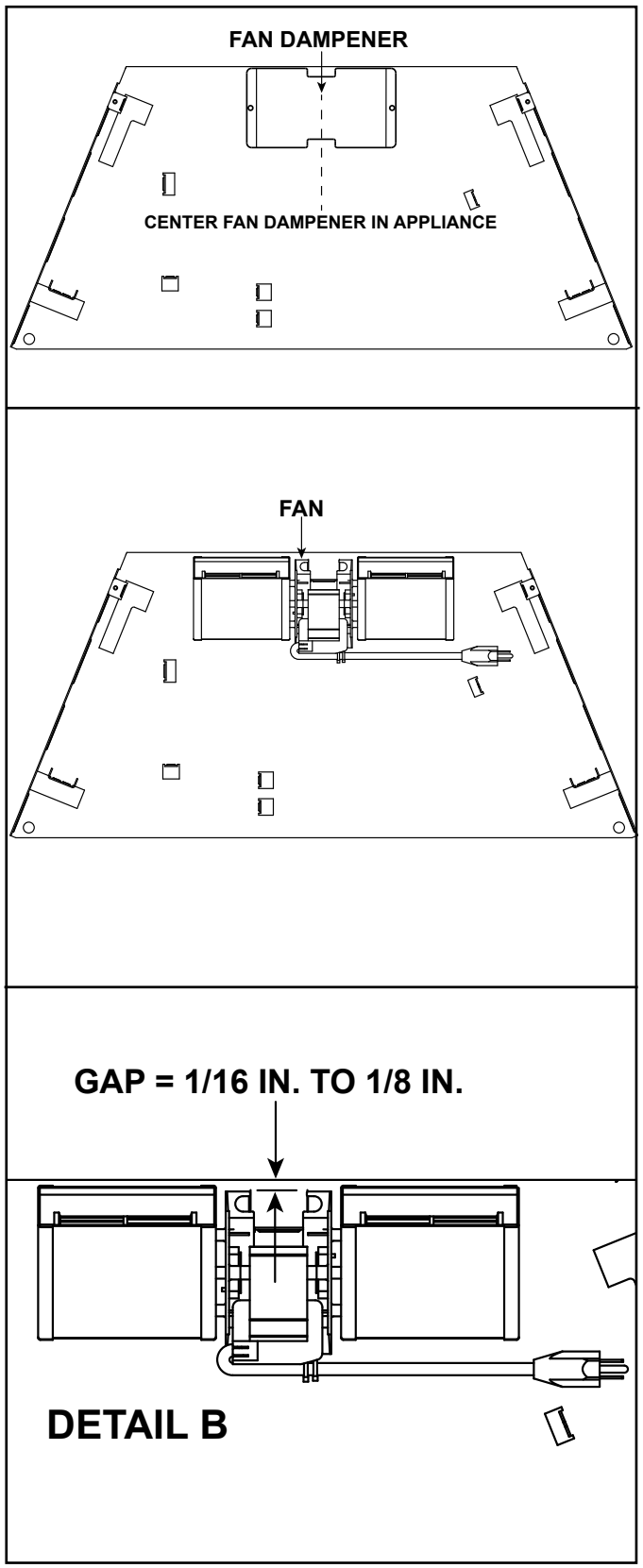

Figure 9.4 Fan Location

C. Clean the Appliance

Clean/vacuum any sawdust that may have accumulated inside the firebox or underneath in the control cavity.

D. Accessories

Install approved accessories per instructions included with accessories. Contact your dealer for a list of approved accessories.

WARNING! Risk of Fire and Electric Shock! *Use ONLY Hearth & Home Technologies-approved optional accessories with this appliance. Using non-listed accessories could result in a safety hazard and will void the warranty.*

E. Mystic Embers Placement

WARNING! Risk of Explosion! *Follow mystic ember placement instructions.* ***DO NOT*** *place mystic embers on burner. Improperly placed mystic embers interferes with proper burner operation.*

Mystic embers are shipped with this gas appliance. To place the embers:

- Mystic embers CANNOT be placed on the burner.
- Place mystic embers in front of and to the sides of the burner.

F. Glowing Ember Placement

WARNING! Risk of Explosion! *Follow ember placement instructions in manual. Replace ember material annually. Improperly placed embers interfere with proper burner operation.*

Glowing ember material is shipped with this gas appliance. To place the ember material:

- Embers CANNOT be placed in the shaded area as shown in Figure 9.5.
- Glowing embers must be placed loosely over the port holes, not pressed down on or into the holes. Create a single layer, no more than 1/4 inch thick.
- Failure to follow this procedure will likely cause lighting and sooting problems.
- Save the remaining ember materials for use during appliance servicing. The embers provided should be enough for 3 to 5 applications.

MYSTIC EMBERS PLACEMENT:

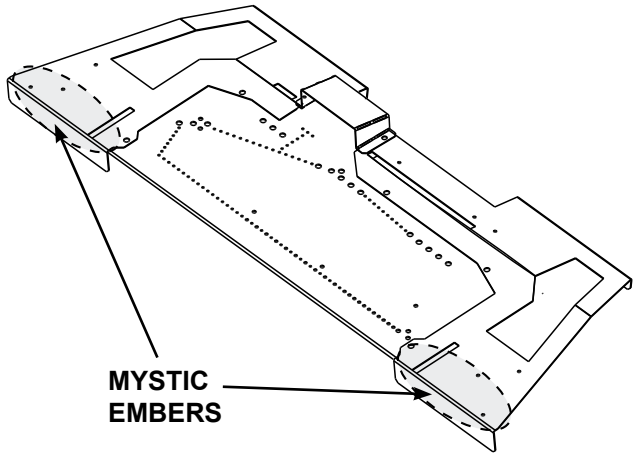

GLOWING EMBER PLACEMENT:

RUBY25

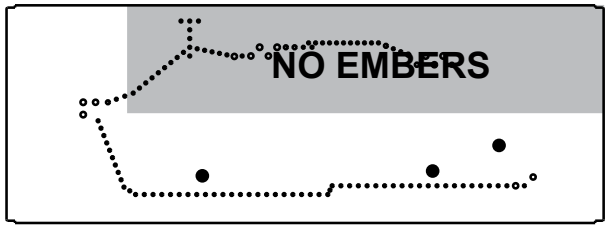

RUBY30

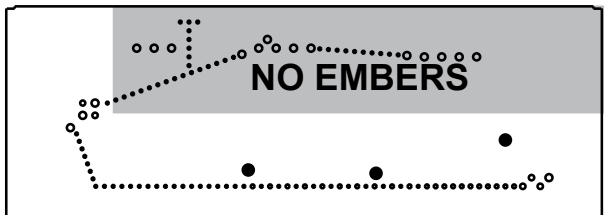

RUBY35

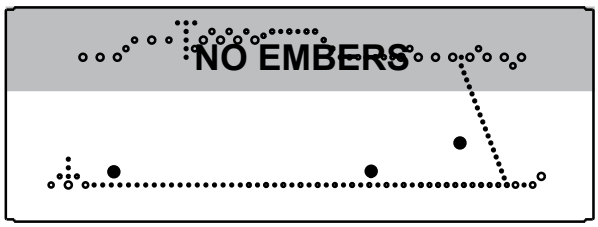

Figure 9.5 Placement of Embers

G. Install the Log Assembly

LOG PLACEMENT INSTRUCTIONS

Log Set Assembly: LOGS-2540, LOGS-2542, LOGS-2544

Models: RUBY25IN, RUBY25IL, RUBY30IN, RUBY30IL, RUBY35IN, RUBY35IL

Leave this manual with party responsible for use and operation.

CAUTION! Risk of Cuts or Abrasions. *Wear protective gloves and safety glasses during installation.*

CAUTION: Logs are fragile, handle with care.

NOTICE: To simplify the installation process, positively identify each individual log before beginning installation.

MODELS: RUBY25IN, RUBY25IL

RUBY25 SRV LOGS		
LOG ID	SRV PART #	MOLDED LOG #
1	SRV2540-711	40-1
2	SRV2542-715	40-5
3	SRV2540-713	40-3
4	SRV2542-712	40-2
5	SRV2542-714	40-4
6	SRV2542-717	40-7
7	SRV2542-717	40-7

Mystic Embers: The RUBY come standard with Mystic Embers. Refer to the appliance installation manual for instructions on how to properly install the Mystic Embers in the appliance. The Mystic Embers must be installed after the logs are installed.

Figure 1. Log Identification

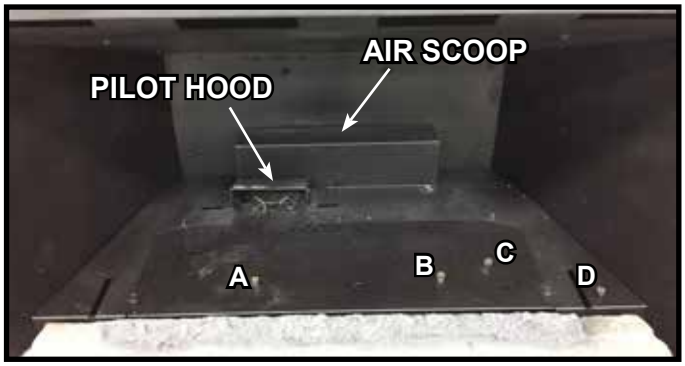

Figure 2. Empty Firebox with Hearth Front Installed

LOG #1: With the pilot hood cutout of Log #1 on the left, place the cutout over the pilot hood and set Log #1 on the basepan. Slide the log back until it contacts the air scoop. See Figure 3.

LOG #2: With the flat spot of Log #2 to the left, place it on the burner and slide it to the right until it contacts log pin C. Then slide the log forward until it contacts log pins A and B. See Figure 4.

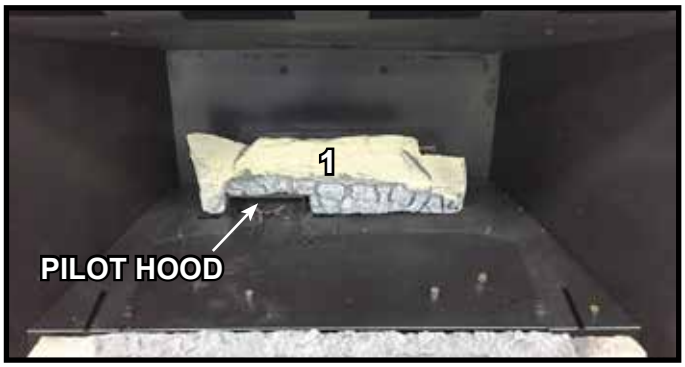

Figure 3. Log #1 Installed

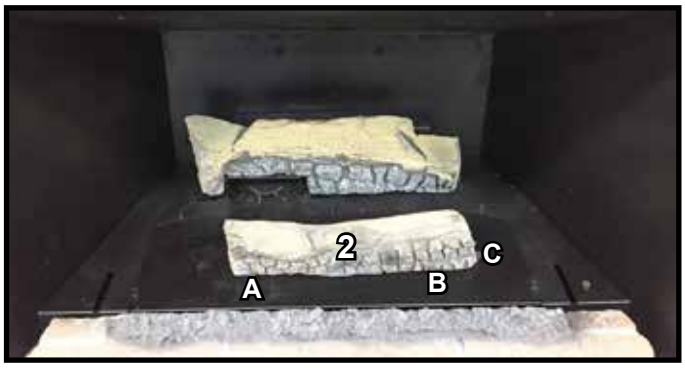

Figure 4. Log #2 Installed

LOG #3: With the burnout area facing right, place the back end of log #3 on the left flat spot of Log #1. The front end will sit on the base pan and line up with edge of the base refractory. The front end of the log will sit about ¼" from the left wall of the firebox. See Figure 5.

LOG #4: The burnout area of the log will face left. Place the big end of log #4 centered against log pin D and the small end on the flat spot of Log #1. See Figure 6.

Figure 5. Log #3 Installed

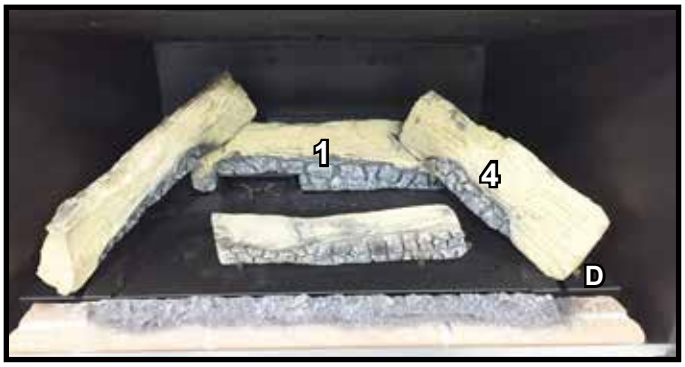

Figure 6. Log #4 Installed

LOG #5: With the bark side of log #5 facing right, place the small end of Log #5 on the flat spot of Log #4. The big end of log #5 will line up with the front edge of the refractory embers and sit just to the left of the grout line. See Figure 7.

LOG #6: With bark side of log facing right, place Log #6 onto Log #2. The point of the big end of Log #6 will line up with the front edge of the base refractory embers. The bark corner of log #6 will sit about 1.5" from Log #5. See Figures 8 & 9.

Figure 7. Log #5 Installed

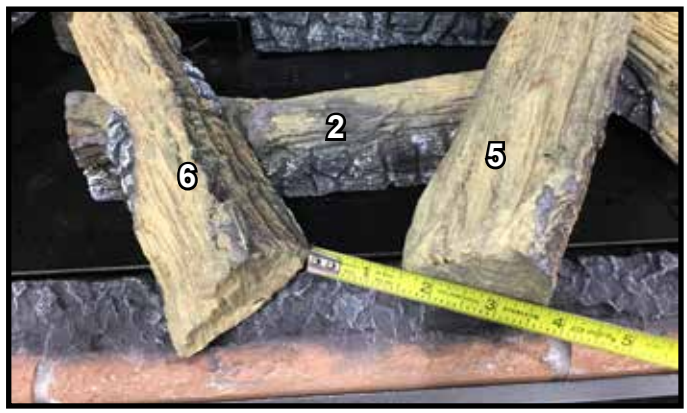

Figure 8. Log #6

LOG #7: With bark side facing left, place the small end of Log #7 on the flat spot of Log #2. Place the large end of Log #7 on the flat spot of Log #1. See Figure 10.

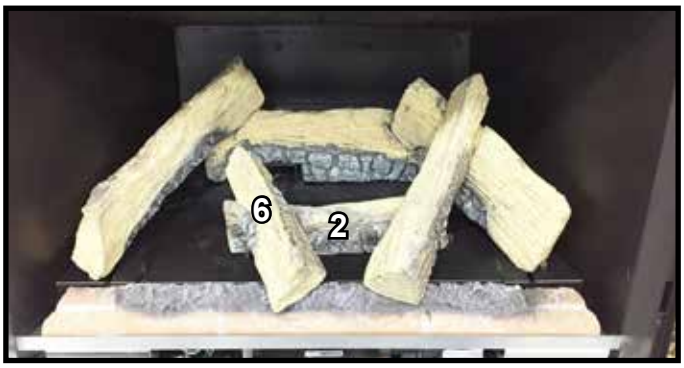

Figure 9. Log #6 Installed

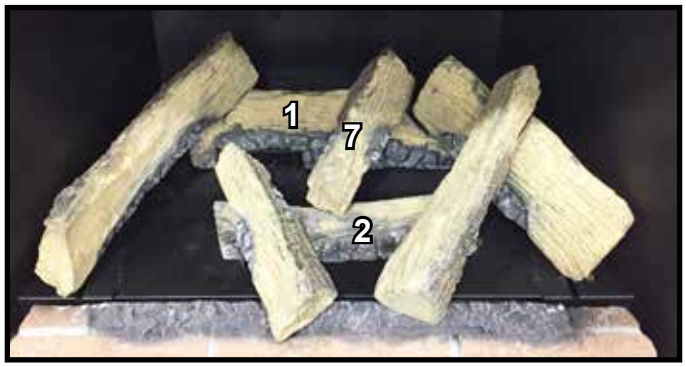

Figure 10. Log #7 Installed

MODELS: RUBY30IN, RUBY30IL

RUBY30 SRV LOGS		
LOG ID	SRV PART #	MOLDED LOG #
1	SRV2542-711	42-1
2	SRV2544-715	42-5
3	SRV2542-712	42-2
4	SRV2542-715	42-5
5	SRV2542-717	42-7
6	SRV2542-714	42-4
7	SRV2542-717	42-7
8	SRV2542-718	42-8

Figure 1. Log Identification

Mystic Embers: The RUBY come standard with Mystic Embers. Refer to the appliance installation manual for instructions on how to properly install the Mystic Embers in the appliance. The Mystic Embers must be installed after the logs are installed.

LOG #1: With the pilot hood cutout on the left, place the right end of Log #1 against log pin F and then lower it down over the pilot hood. Slide the log back until it contacts the air scoop. See Figure 3.

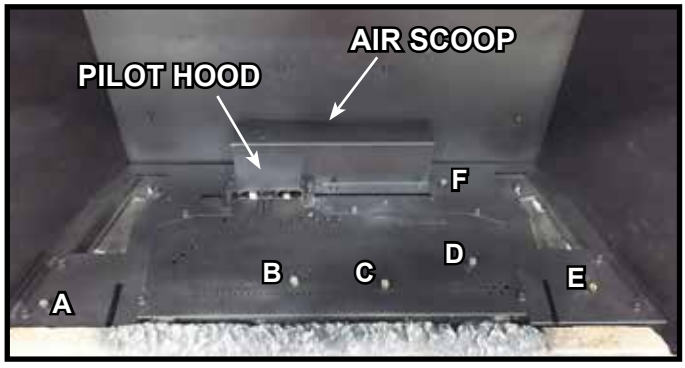

Figure 2. Burner Location

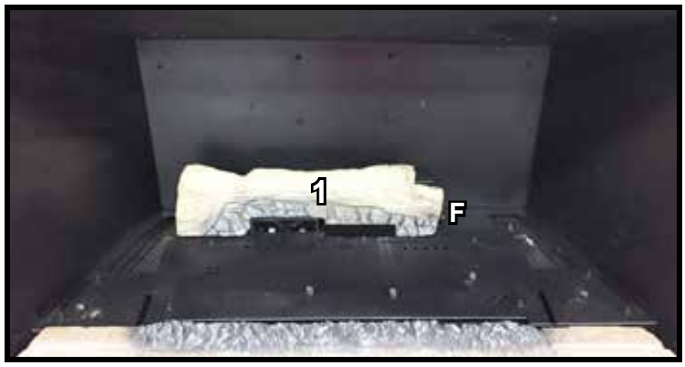

Figure 3. Log #1 Installed

LOG #2: With the burnout area facing right, place the center of the small end of Log #2 against log pin A. Place the big end of the log on the flat spot of Log #1. See Figure 4.

LOG #3: The burnout area of Log #3 will face forward. Place the right end of Log #3 centered against log pin E and the left end on the flat spot of Log #1. See Figure 5.

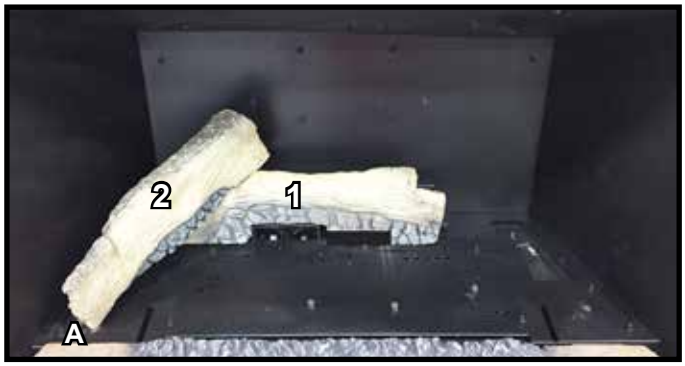

Figure 4. Log #2 Installed

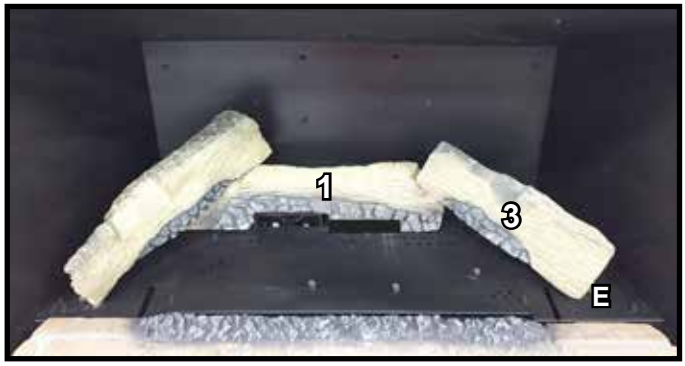

Figure 5. Log #3 Installed

LOG #4: With the flat spot of Log #4 to left, place it on the burner and slide it to the right until it contacts log pin D. Then slide the log forward until it contacts log pins B and C. See Figure 6.

LOG #5: The big end of Log #5 will sit on the flat spot of Log #2 and the small end will sit on the ember area of the base refractory as shown in Figure 7.

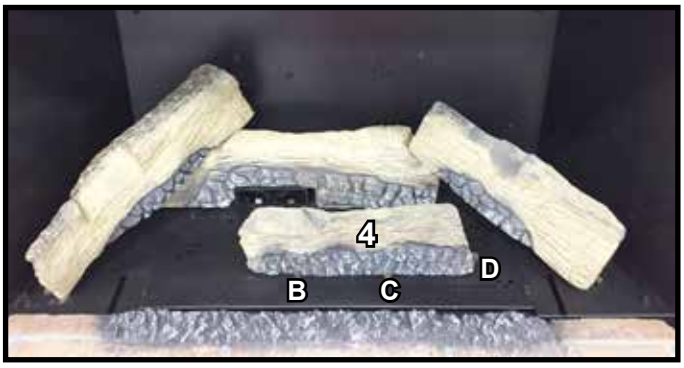

Figure 6. Log #4 Installed

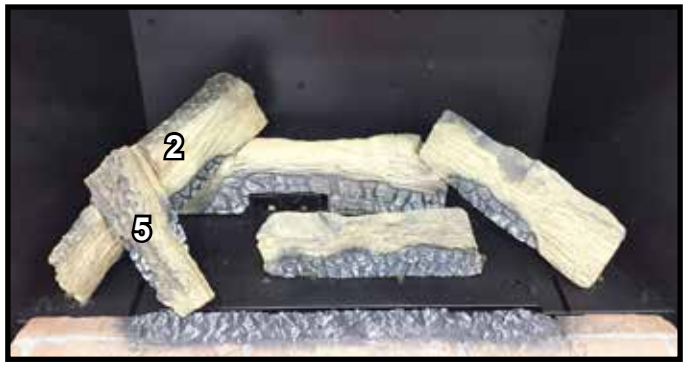

Figure 7. Log #5 Installed

LOG #6: With split side of Log #6 to the left, place small end of the log on the flat spot of Log #3. The big end of the log will line up with the front edge of the refractory embers and the grout line as shown in Figure 8.

LOG #7: Place small end of Log #7 onto the flat notch of Log #4. Place big end of Log #7 on the flat spot of Log #1. The big end of Log #7 will touch the end of Log #3. See Figure 9.

Figure 8. Log #6 Installed

Figure 9. Log #7 Installed

LOG #8: With bark side of log #8 facing left, place it onto Log #4. The big end of Log #8 will line up with the front edge of the base refractory embers. The corner of Log #8 will sit about 1.25” from the corner of Log #6. See Figures 10 & 11.

Figure 10. Log #8 Distance Log #8 & Log #6.

Figure 11. Log #8 Installed

MODELS: RUBY35IN, RUBY35IL

RUBY35 SRV LOGS		
LOG ID	SRV PART #	MOLDED LOG #
1	SRV2544-711	44-1
2	SRV2544-715	44-5
3	SRV2544-712	44-2
4	SRV2544-716	44-6
5	SRV2542-717	44-7
6	SRV2542-717	44-7
7	SRV2542-717	44-7
8	SRV2540-713	44-3
9	SRV2540-713	44-3

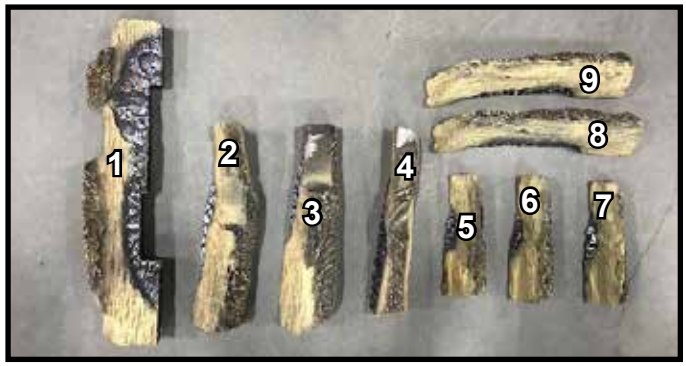

Figure 1. Log Identification

Note: Logs #5, #6 and #7 are the same log and logs #8 and #9 are the same log.

Mystic Embers: The RUBY come standard with Mystic Embers. Refer to the appliance installation manual for instructions on how to properly install the Mystic Embers in the appliance. The Mystic Embers must be installed after the logs are installed.

LOG #1: Place the pilot hood cutout of Log #1 over the pilot hood and slide it back until it sits flush against the air scoop. See Figure 3.

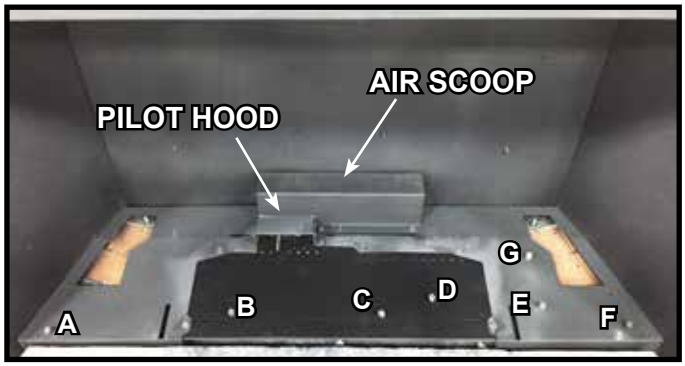

Figure 2. Burner Location

Figure 3. Log #1 Installed

LOG #2: With the split side of Log #2 facing right, place the center of the small end of the log against log pin A. The big end of Log #2 will sit on the flat spot of Log #1. See Figure 4.

LOG #3: Place the big end of Log #3 against log pin F and the burnout end on the flat spot of Log #1. The front point of Log #3 should line up with the edge of the base refractory. See Figure 5.

Figure 4. Log #2 Installed

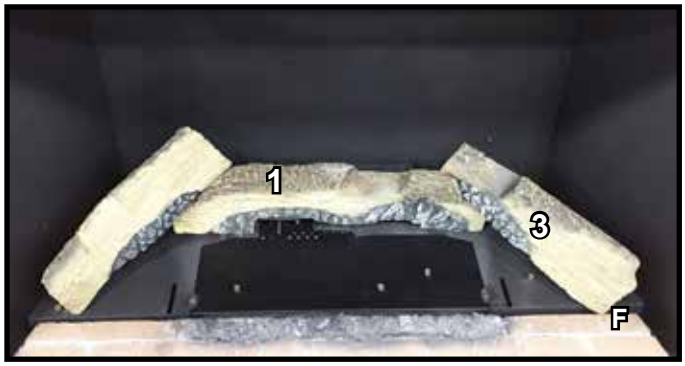

Figure 5. Log #3 Installed

LOG #4: With the flat spot of Log #4 to the left, place it on the burner and slide it to the right until it contacts log pin D. Then slide Log #4 forward until it contacts log pins B and C. See Figure 6.

LOG #5: Place the small end of Log #5 in the flat notch of Log #4 and the big end in the flat spot of Log #1. See Figure 7.

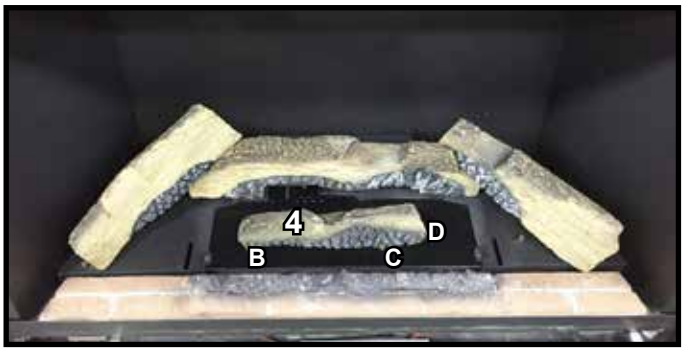

Figure 6. Log #4 Installed

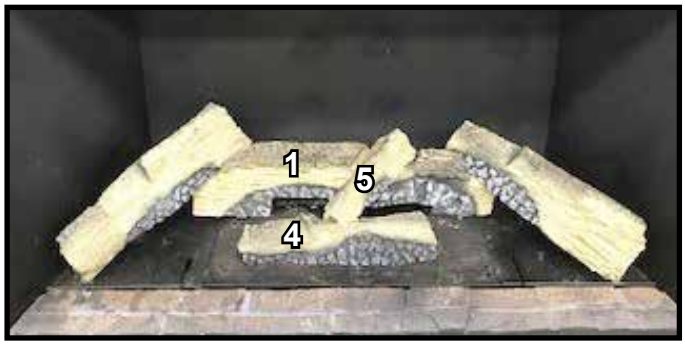

Figure 7. Log #5 Installed

LOG #6: With split side of Log #6 facing left, slide it under Log #3 until it contacts Log #1. Slide Log #6 to the right until it contacts log pins E and G. See Figure 8.

LOG #7: With the bark side of Log #7 facing forward place the big end of the log on the flat spot of Log #2. The small end of Log #7 will rest on the base pan, lined up with the edge of the base refractory and the air slot in the base pan. See Figure 9.

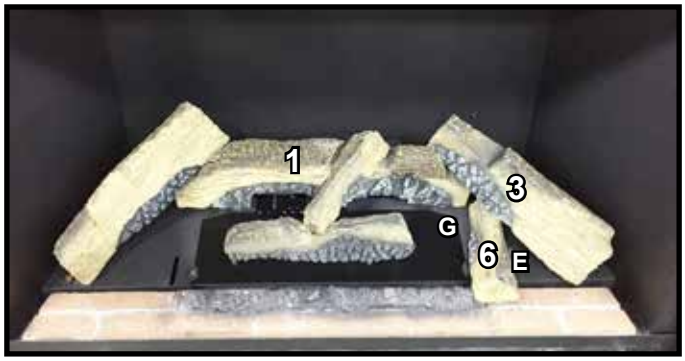

Figure 8. Log #6 Installed

Figure 9. Log #7 Installed

LOG #8: With the bark side of Log #8 facing left, place the flat end of the log on the flat spot of Log #3. The flat end of Log #8 should be flush with the back side of Log #3. The pointed end of Log #8 will line up with the edge of the refractory embers and sit just to the left of the grout line. See Figure 10.

LOG #9: With the bark side of Log #9 facing right, set the log onto the flat spot of Log #4. The tip of the pointed end of the log will contact Log #2 just to the right edge of the burnout area of Log #2. The big end of the log will sit on the refractory embers. See Figure 11.

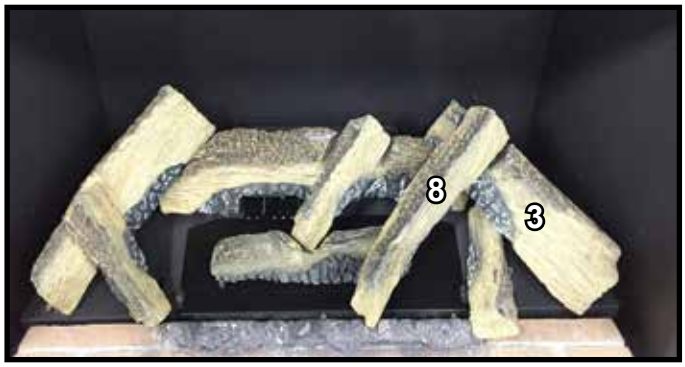

Figure 10. Log #8 Installed

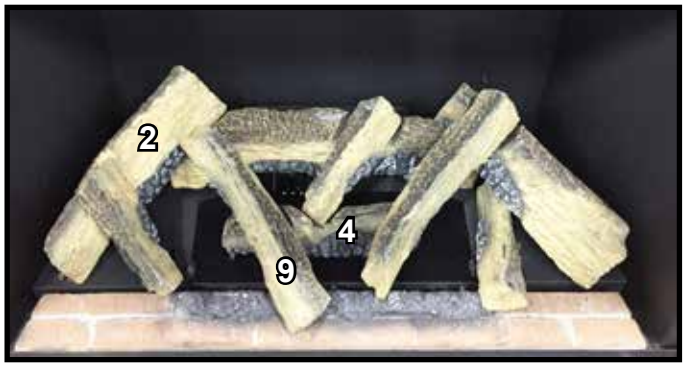

Figure 11. Log #9 Installed

2542-935

H. Install Decorative Barrier Front and Surround

A decorative barrier front and surround is required to complete this installation. Installation instructions are included with the decorative barrier front and surround. Consult your dealer for a list of decorative barrier front and surround options.

WARNING! Risk of Fire! *Install ONLY doors or fronts approved by Hearth & Home Technologies. Unapproved doors or fronts may cause fireplace to overheat.*

This fireplace has been supplied with an integral barrier to prevent direct contact with the fixed glass panel. DO NOT operate the fireplace with the barrier removed.

Contact your dealer or Hearth & Home Technologies if the barrier is not present or help is needed to properly install one.

For more information refer to the instructions supplied with your decorative barrier front.

See Figure 9.6 for Reset Switch Detail. The Reset Switch included with the surround needs to be wired to the appliance. Reference front/surround instructions (included with the decorative barrier front) and wiring diagram in Figure 6.2.

- Reset switch must be installed and in the “ON” position for appliance to operate.

NOTE: For on site custom surround details, see instructions included with the surround.

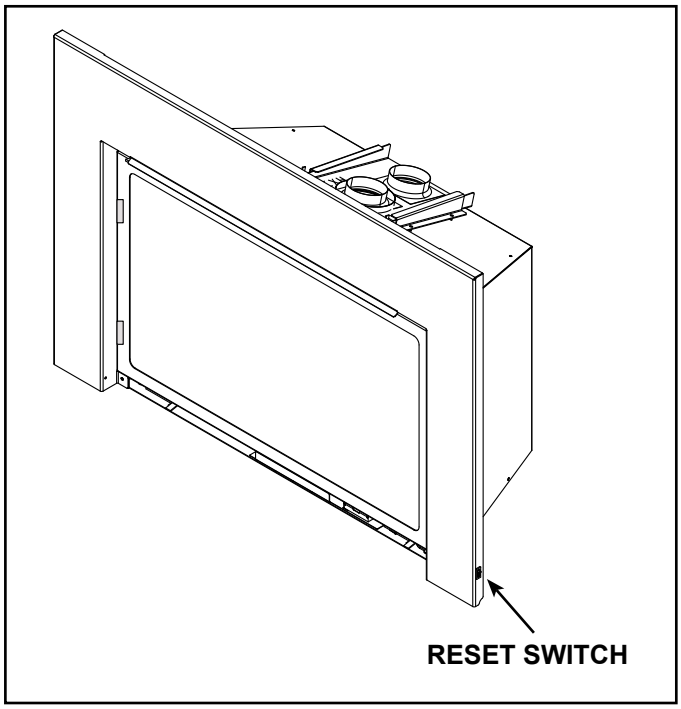

Figure 9.6 Surround Reset Switch

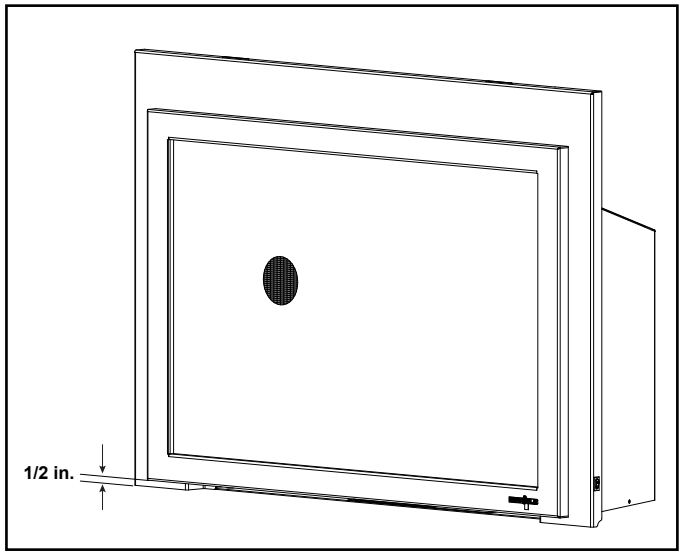

Figure 9.7 Required 1/2 in. Gap

NOTICE: *1/2 inch gap must be maintained or components will overheat.*

I. Appliance Break-In

Follow the initial break-in procedure below to cure the materials used to manufacture the fireplace and the finishing materials around it.

- The fireplace should be run three to four hours continuously on high flame.
- Turn the fireplace off and allow it to cool completely.
- Remove fixed glass assembly. See Section 9.A.
- Clean fixed glass assembly.
- Replace the fixed glass assembly and run continuously on high an additional 12 hours.

Note: The IntelliFire Touch system has a safety feature that automatically shuts down the fireplace after 9 hours of continuous operation without receiving a command from the remote control. If this occurs, restart the appliance.

NOTICE! Open windows for air circulation during fireplace break-in.

- *Some people may be sensitive to smoke and odors.*
- *Smoke detectors may activate.*

J. Heat Management

Heat Output

Heat Output is managed through the RC400 remote control that comes standard with the fireplace.

- Turn the appliance on and off.
- Adjust the height of the flame by varying the input using the remote control.
- Adjust the fan speed.

For more information, see the instructions that accompany the remote control.

NOTICE! *Set the fan speed to high on the RC400 remote control during the first three to four hours of break-in operation. This break-in will ensure optimum speed control of the fans during subsequent use.*

10 Reference Materials

A. Vent Components

Direct Vent Flex Liner Kits (see Figure 10.1)

LINK-DV30B: Masonry 3 inch flex liner kit. Expands to 30 feet. Includes: two liners, termination cap and flashing.

LINK-DV4-30B: Masonry 3 inch flex liner kit. Expands to 30 feet and 4 feet respectively. Includes: two liners, termination cap and flashing.

LINKSQC-DV30, LINKSQB-DV30: Masonry 3 inch flex liner kit. Expands to 30 feet. Includes: two liners, termination cap and flashing.

LINKSQC-DV4-30, LINKSQB-DV4-30: Masonry 3 inch flex liner kit. Expands to 30 feet and 4 feet respectively. Includes: two liners, termination cap and flashing.

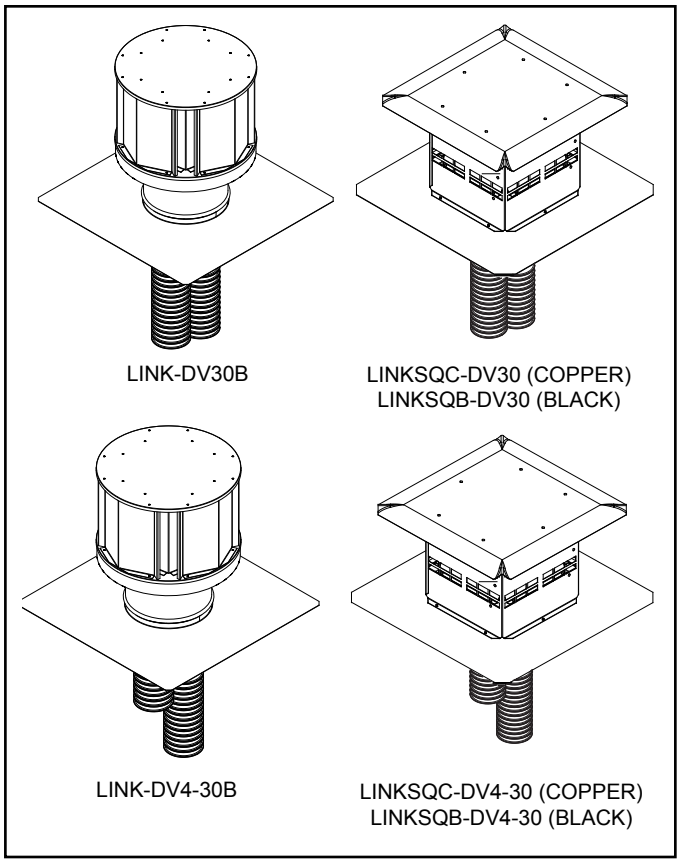

Figure 10.1 Direct Vent Flex Liner Kits

Direct Vent Flex Liner Accessory Kits. See Figure 10.2.

LINK-ZC-ADPB: Zero clearance chimney adapter

DV-46DVA-GK: Adapter kit - It is permissible to use DV-46DVA-GK to connect colinear flex vent to SLP vent pipe to extend the run.

FLEX3-30: One 3 inch flexible liner expands to 30 feet.

FLEX-CNCT: Connector kit - 3 inch liner to 3 inch liner, one connector per kit.

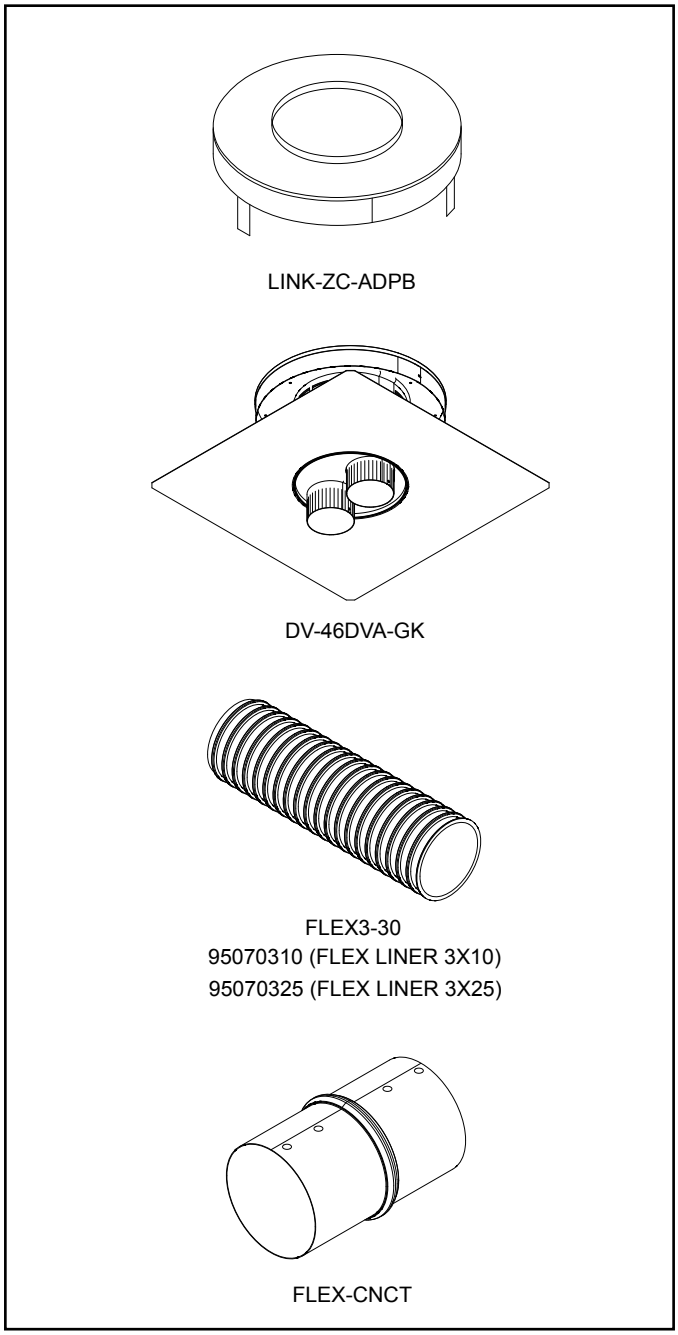

Figure 10.2 Direct Vent Flex Liner Accessory Kits

Reference price book for SLP components.

Note: No Horizontal Termination allowed.

B. Accessories

Install approved accessories per instructions included with accessories. Contact your dealer for a list of approved accessories.

WARNING! Risk of Fire and Electric Shock! *Use ONLY Hearth & Home Technologies-approved optional accessories with this appliance. Using non-listed accessories could result in a safety hazard and will void the warranty.*

Remote Controls, Wall Controls and Wall Switches

Follow the instructions supplied with the control installed to operate your fireplace:

For safety:

- Install a switch lock or a wall/remote control with child protection lockout feature.
- Keep remote controls out of reach of children.

See your dealer if you have questions.

Optional Halogen Lights

If desired, a halogen light kit may be added. Contact your dealer to order the correct halogen light kit. Follow the instructions supplied with the halogen light kit to install and operate your halogen lights. See your dealer if you have questions.

Note: Not offered with 25 in. model.

Fan

Fan is factory installed. No additional set up is required.

Optional Refractory

If desired, a refractory kit may be added. Contact your dealer to order the correct refractory kit. Follow instructions supplied with the refractory kit to install your refractory. See your dealer if you have questions.

Majestic, a brand of Hearth & Home Technologies
7571 215th Street West, Lakeville, MN 55044
www.majesticproducts.com

Please contact your Majestic dealer with any questions or concerns.
For the location of your nearest Majestic dealer,
please visit www.majesticproducts.com.

Printed in U.S.A. - Copyright 2024