Installation Manual

Installation and Appliance Setup

***CAUTION! Risk of Fire! DO NOT** store instruction manuals inside fireplace cavity. High temperatures could cause a fire.*

INSTALLER: Leave this manual with the appliance, not inside the appliance.
CONSUMER: Retain this manual for future reference. Do not store inside the appliance.

***NOTICE: DO NOT** discard this manual!*

HEARTH & HOME technologies

Models:
PIER-DV36IN
ST-DV36IN

GAS-FIRED
c UL us
LISTED

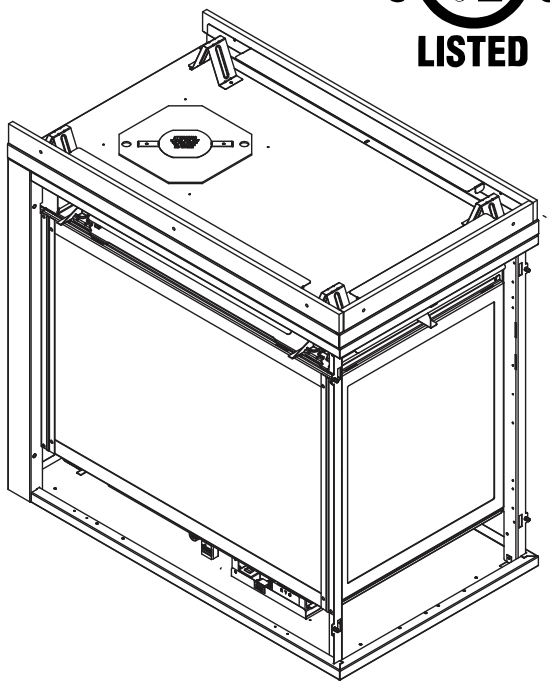

This appliance may be installed as an OEM installation in manufactured home (USA only) or mobile home and must be installed in accordance with the manufacturer's instructions and the *Manufactured Home Construction and Safety Standard, Title 24 CFR, Part 3280* in the United States, or the *Standard for Installation in Mobile Homes, CAN/CSA Z240 MH Series,* in Canada.

This appliance is only for use with the type(s) of gas indicated on the rating plate. This appliance is not convertible for use with other gases, unless a certified kit is used.

⚠ WARNING:
FIRE OR EXPLOSION HAZARD
Failure to follow safety warnings exactly could result in serious injury, death, or property damage.

- **DO NOT** store or use gasoline or other flammable vapors and liquids in the vicinity of this or any other appliance.
- **What to do if you smell gas**
  - **DO NOT** try to light any appliance.
  - **DO NOT** touch any electrical switch. **DO NOT** use any phone in your building.
  - Leave the building immediately.
  - Immediately call your gas supplier from a neighbor's phone. Follow the gas supplier's instructions.
  - If you cannot reach your gas supplier, call the fire department.
- Installation and service must be performed by a qualified installer, service agency, or the gas supplier.

⚠ DANGER

HOT GLASS WILL CAUSE BURNS.

DO NOT TOUCH GLASS UNTIL COOLED.

NEVER ALLOW CHILDREN TO TOUCH GLASS.

A barrier designed to reduce the risk of burns from the hot viewing glass is provided with this appliance and must be installed for the protection of children and other at-risk individuals.

Decorative barrier front must be ordered separately at time of appliance purchase. See Section 3.B.

⚠ Safety Alert Key:

- ***DANGER!*** *Indicates a hazardous situation which, if not avoided will result in death or serious injury.*
- ***WARNING!*** *Indicates a hazardous situation which, if not avoided could result in death or serious injury.*
- ***CAUTION!*** *Indicates a hazardous situation which, if not avoided, could result in minor or moderate injury.*
- ***NOTICE:*** *Used to address practices not related to personal injury.*

Note: *The term "recommend" or "recommended" does not indicate a requirement. It is a best practice suggested by Hearth & Home Technologies®.*

Table of Contents

Installation Standard Work Checklist 3

1 Product Specific and Important Safety Information

A. Appliance Certification 4
B. Glass Specifications 4
C. BTU Specifications 4
D. High Altitude Installations 4
E. Non-Combustible Materials Specification 5
F. Combustible Materials Specification 5
G. Electrical Codes 5
H. California 5
I. Requirements for the Commonwealth of Massachusetts . . 6

2 Getting Started

A. Design and Installation Considerations 7
B. Good Faith Wall Surface/TV Guidelines 7
C. Tools and Supplies Needed 9
D. Inspect Appliance and Components 9

3 Framing and Clearances

A. Appliance Weights and Dimensions 10
B. Decorative Barrier Front Dimension Diagrams 12
C. Appliance Location and Clearances to Combustibles . . . 13
D. Constructing the Appliance Chase 17
E. Floor Protection 17

4 Termination Location and Vent Information

A. Approved Pipe 18
B. Vent Termination Minimum Clearances 18
C. Vent Terminal Clearances 20
D. Use of Elbows 21
E. Vent Diagrams 22

5 Vent Clearances and Vent Framing

A. Vent Clearances to Combustibles 35
B. Wall Penetration Framing/Firestops 36
C. Ceiling Firestop/Floor Penetration Framing 37
D. Install Attic Insulation Shield 37

6 Appliance Preparation

A. Vent Collar Preparation 38
B. Securing and Leveling the Appliance 40
C. Non-Combustible Material (Factory-Installed) 41

7 Venting

A. Assemble Vent Sections (DVP Pipe Only) 42
B. Assemble Vent Sections (SLP Only) 44
C. Assemble Slip Sections 45
D. Secure the Vent Sections 46
E. Disassemble Vent Sections 46
F. Vertical Termination Requirements 47
G. Horizontal Termination Requirements 48

8 Electrical Information

A. General Information 50
B. Wiring Requirements 51
C. Fan (Optional) 54

9 Gas Information

A. Fuel Conversion 55
B. Gas Pressure 55
C. Gas Connection 55
D. High Altitude Installations 55
E. Air Shutter Setting 56

10 Finishing

A. Facing Material 57
B. Installing a Television 58
C. Mantel and Wall Projections 58
D. Decorative Barrier Front Dimensions for Finishing 60

11 Appliance Setup

A. Remove the Shipping Materials 61
B. Clean the Appliance 61
C. Install the Refractory (Optional) 61
D. Glowing Ember and Lava Rock Placement 62
E. Install the Log Assembly 63
F. IntelliFire Touch® Control System Setup 65
G. Install Fixed Glass Assembly 65
H. Install Decorative Barrier Front 66

12 Reference Materials

A. Vent Components Diagrams 67
B. Accessories 78

➔ = Contains updated information.

Installation Standard Work Checklist

ATTENTION INSTALLER:

Follow this Standard Work Checklist

This standard work checklist is to be used by the installer in conjunction with, not instead of, the instructions contained in this installation manual.

Customer: _____

Lot/Address: _____

_____

Model (circle one): **PIER-DV36IN** **ST-DV36IN**

Date Installed: _____

Location of Fireplace: _____

Installer: _____

Dealer/Distributor Phone # _____

Serial #: _____

> ***WARNING! Risk of Fire or Explosion!*** *Failure to install appliance according to these instructions could lead to a fire or explosion. Install ONLY components and accessories approved by Hearth & Home Technologies. Unapproved components and accessories could cause fireplace to overheat.*

Appliance Install	**YES**	**IF NO, WHY?**
Verified that the chase is insulated and sealed. (Pg.17)	☐	_____
Required non-combustible board is installed. (Pg.41)	☐	_____
Verified clearances to combustibles. (Pg. 13-16)	☐	_____
Fireplace is leveled and secured. (Pg. 40)	☐	_____
Venting/Chimney Section 7 (Pg 42-49)		
Venting configuration complies to vent diagrams.	☐	_____
Venting installed, locked and secured in place with proper clearance. (May need to order separately.)	☐	_____
Firestops installed.	☐	_____
No insulation or foam materials in contact with venting or between ceiling/wall shield firestops.	☐	_____
Attic insulation shield installed.	☐	_____
Exterior wall/Roof flashing installed and sealed.	☐	_____
Terminations installed and sealed.	☐	_____
Electrical Section 8 (Pg 50-54)		
Unswitched power (110-120 VAC) provided to the appliance.	☐	_____
Switch wires properly installed.	☐	_____
Gas Section 9 (Pg 55-56)		
Proper appliance for fuel type.	☐	_____
Was a conversion performed?	☐	_____
Leak check performed and inlet pressure verified.	☐	_____
Verified proper air shutter setting for installation type.	☐	_____
Finishing Section 10 (Pg 57-60)		
Combustible materials not installed in non-combustible areas.	☐	_____
Verified all clearances meet installation manual requirements.	☐	_____
Mantels and wall projections comply with installation manual requirements.	☐	_____
Appliance Setup Section 11 (Pg 61-66)		
All packaging and protective materials removed (inside & outside of appliance).	☐	_____
Refractories, logs, lava rock and embers installed correctly.	☐	_____
Glass assembly installed and secured.	☐	_____
Accessories installed properly.	☐	_____
Mesh, decorative barrier front properly installed. (May need to order separately.)	☐	_____
Manual bag and all of its contents are removed from inside/under the appliance and given to party responsible for use and operation.	☐	_____
Started appliance and verified no gas leaks exist.	☐	_____

Hearth & Home Technologies recommends the following:

- Photographing the installation and copying this checklist for your file.
- That this checklist remain visible at all times on the appliance until the installation is complete.

Comments: Further description of the issues, who is responsible (Installer/ Builder/ Other Trades, etc) and corrective action needed _____

_____

Comments Communicated to party responsible _____ by _____ on _____

(Builder / Gen. Contractor/) (Installer) (Date)

➔ = Contains updated information.

2658-982 3/22

1 Product Specific and Important Safety Information

A. Appliance Certification

MODELS: **PIER-DV36IN, ST-DV36IN**
LABORATORY: **Underwriters Laboratories, Inc. (UL)**
TYPE: **Direct Vent Heater**
STANDARD: **CSA / ANSI Z21.88-2019 • CSA 2.33-2019**

This product is listed to ANSI standards for "Vented Gas Fireplace Heaters" and applicable sections of "Gas Burning Heating Appliances for Manufactured Homes and Recreational Vehicles", and "Gas Fired Appliances for Use at High Altitudes".

NOTICE: *This installation must conform with local codes. In the absence of local codes you must comply with the National Fuel Gas Code, ANSI Z223.1-latest edition in the U.S.A. and the CAN/CGA B149 Installation Codes in Canada.*

NOT INTENDED FOR USE AS A PRIMARY HEAT SOURCE. This appliance is tested and approved as either supplemental room heat or as a decorative appliance. It should not be factored as primary heat in residential heating calculations.

B. Glass Specifications

Hearth & Home Technologies appliances manufactured with tempered glass may be installed in hazardous locations such as bathtub enclosures as defined by the Consumer Product Safety Commission (CPSC). The tempered glass has been tested and certified to the requirements of **ANSI Z97.1** and **CPSC 16 CFR 1202** (Safety Glazing Certification Council **SGCC# 1595** and **1597**. Architectural Testing, Inc. Reports **02-31919.01** and **02-31917.01**).

This statement is in compliance with **CPSC 16 CFR Section 1201.5** "Certification and labeling requirements" which refers to **15** U.S. Code **(USC) 2063** stating "…Such certificate shall accompany the product or shall otherwise be furnished to any distributor or retailer to whom the product is delivered."

Some local building codes require the use of tempered glass with permanent marking in such locations. Glass meeting this requirement is available from the factory. Please contact your dealer or distributor to order.

C. BTU Specifications

Models *(U.S. or Canada)*		Maximum Input BTU/h	Minimum Input BTU/h	Orifice Size (DMS)
PIER-DV36IN (NG)	*(0-2000 FT)*	38,000	21,000	32
PIER-DV36IN (Propane)	*(0-2000 FT)*	35,500	20,000	50
ST-DV36IN (NG)	*(0-2000 FT)*	38,000	21,000	32
ST-DV36IN (Propane)	*(0-2000 FT)*	35,500	20,000	50

D. High Altitude Installations

NOTICE: *If the heating value of the gas has been reduced, these rules do not apply. Check with your local gas utility or authorities having jurisdiction.*

When installing above 2000 feet elevation:

- In the USA: Reduce input rate 4% for each 1000 feet above 2000 feet.
- In CANADA: Input ratings are certified without a reduction of input rate for elevations up to 4500 feet (1370 m) above sea level. Please consult provincial and/or local authorities having jurisdiction for installations at elevations above 4500 feet (1370 m).

Check with your local gas utility to determine proper orifice size.

E. Non-Combustible Materials Specification

Material which will not ignite and burn. Such materials are those consisting entirely of steel, iron, brick, tile, concrete, slate, glass or plasters, or any combination thereof.

Materials that are reported as passing **ASTM E 136, Standard Test Method for Behavior of Materials in a Vertical Tube Furnace at 750 ºC** shall be considered non-combustible materials.

F. Combustible Materials Specification

Materials made of or surfaced with wood, compressed paper, plant fibers, plastics, or other material that can ignite and burn, whether flame proofed or not, or plastered or unplastered shall be considered combustible materials.

G. Electrical Codes

NOTICE: *This appliance must be electrically wired and grounded in accordance with local codes or, in the absence of local codes, with* **National Electric Code ANSI/NFPA 70-latest edition** *or the* **Canadian Electric Code CSA C22.1.**

- A 110-120 VAC circuit for this product must be protected with ground-fault circuit interrupter protection, in compliance with the applicable electrical codes, when it is installed in locations such as in bathrooms or near sinks.

H. California

WARNING: This product and the fuels used to operate this product (liquid propane or natural gas), and the products of combustion of such fuels, can expose you to chemicals including benzene, which is known to the State of California to cause cancer and reproductive harm. For more information go to: www.P65Warnings.ca.gov.

Note: The following requirements reference various Massachusetts and national codes not contained in this document.

I. Requirements for the Commonwealth of Massachusetts

For all side wall horizontally vented gas fueled equipment installed in every dwelling, building or structure used in whole or in part for residential purposes, including those owned or operated by the Commonwealth and where the side wall exhaust vent termination is less than seven (7) feet above finished grade in the area of the venting, including but not limited to decks and porches, the following requirements shall be satisfied:

Installation of Carbon Monoxide Detectors

At the time of installation of the side wall horizontal vented gas fueled equipment, the installing plumber or gas fitter shall observe that a hard wired carbon monoxide detector with an alarm and battery back-up is installed on the floor level where the gas equipment is to be installed. In addition, the installing plumber or gas fitter shall observe that a battery operated or hard wired carbon monoxide detector with an alarm is installed on each additional level of the dwelling, building or structure served by the side wall horizontal vented gas fueled equipment. It shall be the responsibility of the property owner to secure the services of qualified licensed professionals for the installation of hard wired carbon monoxide detectors.

In the event that the side wall horizontally vented gas fueled equipment is installed in a crawl space or an attic, the hard wired carbon monoxide detector with alarm and battery back-up may be installed on the next adjacent floor level.
In the event that the requirements of this subdivision can not be met at the time of completion of installation, the owner shall have a period of thirty (30) days to comply with the above requirements; provided, however, that during said thirty (30) day period, a battery operated carbon monoxide detector with an alarm shall be installed.

Approved Carbon Monoxide Detectors

Each carbon monoxide detector as required in accordance with the above provisions shall comply with NFPA 720 and be ANSI/UL 2034 listed and IAS certified.

Signage

A metal or plastic identification plate shall be permanently mounted to the exterior of the building at a minimum height of eight (8) feet above grade directly in line with the exhaust vent terminal for the horizontally vented gas fueled heating appliance or equipment. The sign shall read, in print size no less than one-half (1/2) in. in size, **"GAS VENT DIRECTLY BELOW. KEEP CLEAR OF ALL OBSTRUCTIONS".**

Inspection

The state or local gas inspector of the side wall horizontally vented gas fueled equipment shall not approve the installation unless, upon inspection, the inspector observes carbon monoxide detectors and signage installed in accordance with the provisions of 248 CMR 5.08(2)(a)1 through 4.

Exemptions

The following equipment is exempt from 248 CMR 5.08(2)(a)1 through 4:

- The equipment listed in Chapter 10 entitled "Equipment Not Required To Be Vented" in the most current edition of NFPA 54 as adopted by the Board; and
- Product Approved side wall horizontally vented gas fueled equipment installed in a room or structure separate from the dwelling, building or structure used in whole or in part for residential purposes.

MANUFACTURER REQUIREMENTS

Gas Equipment Venting System Provided

When the manufacturer of Product Approved side wall horizontally vented gas equipment provides a venting system design or venting system components with the equipment, the instructions provided by the manufacturer for installation of the equipment and the venting system shall include:

- Detailed instructions for the installation of the venting system design or the venting system components; and
- A complete parts list for the venting system design or venting system.

Gas Equipment Venting System NOT Provided

When the manufacturer of a Product Approved side wall horizontally vented gas fueled equipment does not provide the parts for venting the flue gases, but identifies "special venting systems", the following requirements shall be satisfied by the manufacturer:

- The referenced "special venting system" instructions shall be included with the appliance or equipment installation instructions; and
- The "special venting systems" shall be Product Approved by the Board, and the instructions for that system shall include a parts list and detailed installation instructions.

A copy of all installation instructions for all Product Approved side wall horizontally vented gas fueled equipment, all venting instructions, all parts lists for venting instructions, and/or all venting design instructions shall remain with the appliance or equipment at the completion of the installation.

See Gas Connection section for additional Commonwealth of Massachusetts requirements.

2 Getting Started

A. Design and Installation Considerations

WARNING! Risk of Fire or Explosion! *Read all instructions before starting the installation.*

Direct vent gas appliances are designed to operate with all combustion air siphoned from outside of the building and all exhaust gases expelled to the outside. No additional outside air source is required.

Installation MUST comply with local, regional, state and national codes and regulations. Consult insurance carrier, local building inspector, fire officials or authorities having jurisdiction over restrictions, installation inspection and permits.

Before installing, determine the following:

- Where the appliance is to be installed.
- The vent system configuration to be used.
- Gas supply piping requirements.
- Electrical wiring requirements.
- Framing and finishing details.
- Whether optional accessories—devices such as a fan, wall switch, or remote control—are desired.

Installation and service of this appliance should be performed by qualified personnel. Hearth & Home Technologies recommends HHT Factory Trained or NFI certified professionals.

hearthED FACTORY TRAINING Fuel Your Fire

NFI NATIONAL FIREPLACE INSTITUTE® A CERTIFICATION AGENCY

Improper installation, adjustment, alteration, service or maintenance can cause injury or property damage. For assistance or additional information, consult a qualified service technician, service agency or your dealer.

B. Good Faith Wall Surface/TV Guidelines

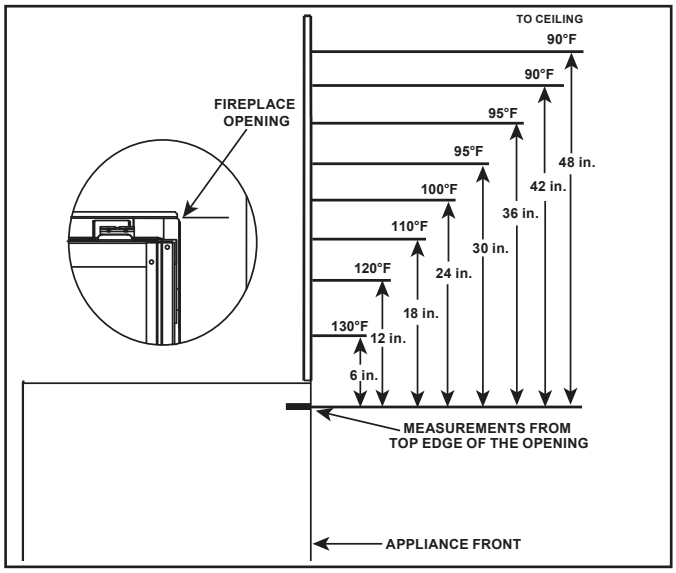

Figure 2.1 Good Faith Wall Surface Temperatures Above Appliance

NOTICE: *Surface temperatures listed above are taken with a temperature measuring probe as prescribed by the test standard used for appliance certification. Temperatures on walls or mantels taken with an infrared thermometer may yield increased temperatures of up to 30 °F (17 °C) or more depending on the thermometer settings and material characteristics being measured. Use appropriate finishing materials that are able to withstand these conditions. For additional finishing guidelines, see Section 10.*

Good Faith Guidelines for TV Installations Above Appliance

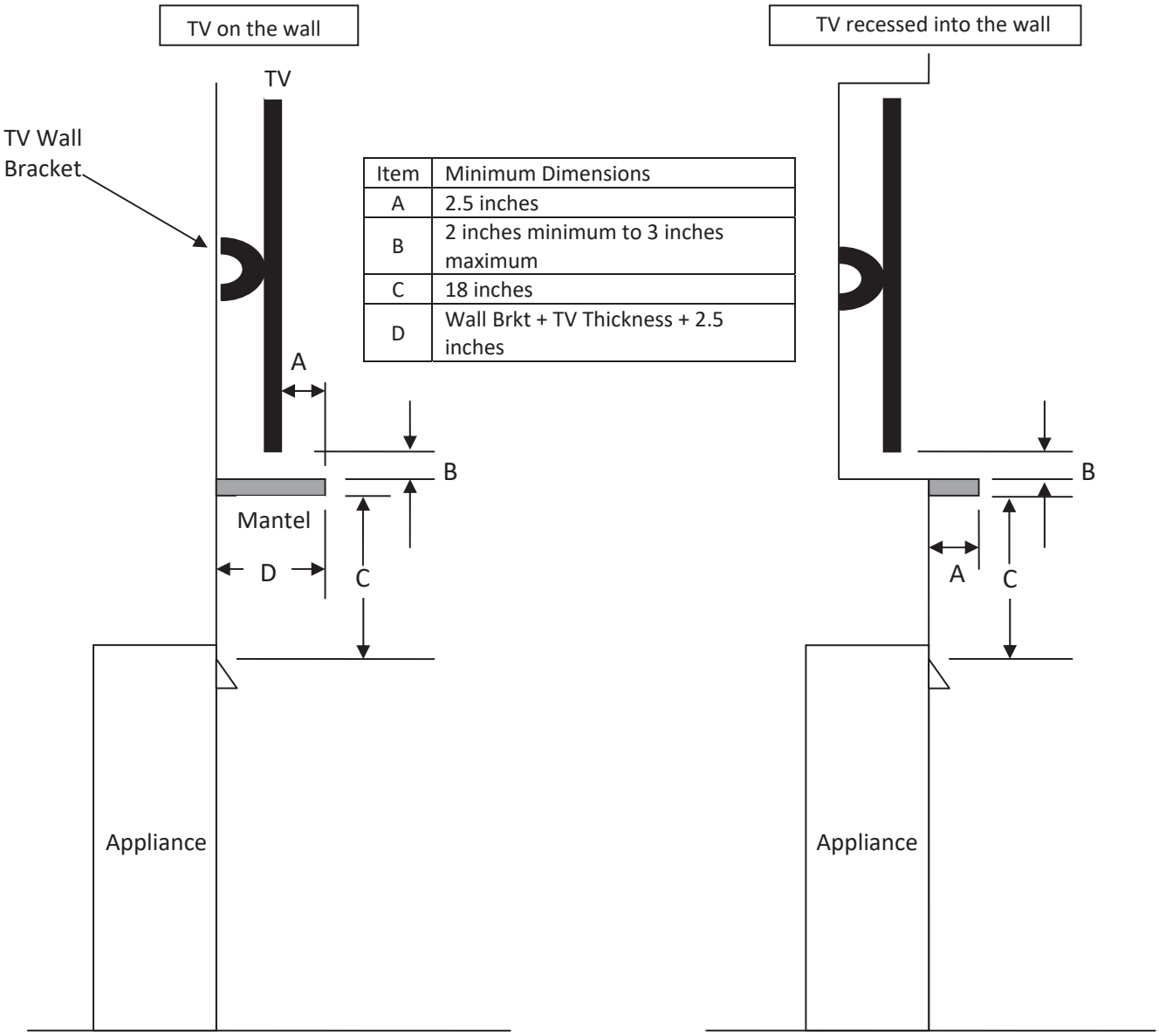

Item	Minimum Dimensions
A	2.5 inches
B	2 inches minimum to 3 inches maximum
C	18 inches
D	Wall Brkt + TV Thickness + 2.5 inches

Notes:

1. These are good faith recommended clearances only and not a guarantee of compliance with all TV manufacturers' maximum allowable operating temperatures.
2. Since every home has unique air flow characteristics and maximum allowable operating temperatures can vary from manufacturer to manufacturer and from model to model, actual TV temperatures should be validated at the time of each installation. TVs should not be used in situations where the actual TV temperature exceeds the manufacturers' maximum allowable operating temperatures identified in the TV's technical specifications. Contact the TV's manufacturer directly if you cannot locate this information or have questions regarding the information.
3. Mantel height and depth must conform to mantel requirements specified in the appliance installation manual.
4. "C" dimension taken from the top of the hood or appliance opening.
5. Suggestions on how to further reduce TV temperatures:
    a. Increase "A" dimension.
    b. Increase "C" dimension, however, increasing "B" dimension beyond maximum recommended typically results in higher temperatures.

Figure 2.2 Good Faith TV Guidelines

C. Tools and Supplies Needed

Before beginning the installation be sure that the following tools and building supplies are available.

Tape measure	Framing material
Pliers	Hammer
Phillips screwdriver	Manometer
Gloves	Framing square
Voltmeter	Electric drill and bits (1/4 in.)
Plumb line	Safety glasses
Level	Reciprocating saw

Flat blade screwdriver

Non-corrosive leak check solution

1/2 - 3/4 in. length, #6 or #8 Self-drilling screws

Caulking material (300ºF minimum continuous exposure rating)

One 1/4 in. female connection (for optional fan).

D. Inspect Appliance and Components

WARNING! Risk of Fire or Explosion! *Damaged parts could impair safe operation.* ***DO NOT i****nstall damaged, incomplete or substitute components. Keep appliance dry.*

WARNING! Risk of Fire, Explosion or Electric Shock! DO NOT *use this appliance if any part has been under water. Call a qualified service technician to inspect the appliance and to replace any part of the control system and/or gas control which has been under water.*

- Carefully remove the appliance and components from the packaging.
- The vent system components and decorative barrier fronts may be shipped in separate packages.
- If packaged separately, the log set and appliance grate must be installed.
- Report to your dealer any parts damaged in shipment.

Hearth & Home Technologies disclaims any responsibility for, and the warranty will be voided by, the following actions:

- Installation and use of any damaged appliance or vent system component.
- Modification of the appliance or vent system.
- Installation other than as instructed by Hearth & Home Technologies.
- Improper positioning of the logs/media (as applicable) or the glass assembly.
- Installation and/or use of any component part not approved by Hearth & Home Technologies.

3 Framing and Clearances

A. Appliance Weights and Dimensions

Dimensions are actual appliance dimensions. Use for reference only. For framing dimensions and clearances refer to Section 5.

Appliance Weight Table

Model	Pounds	Kilograms
ST-DV36IN	220	99.8

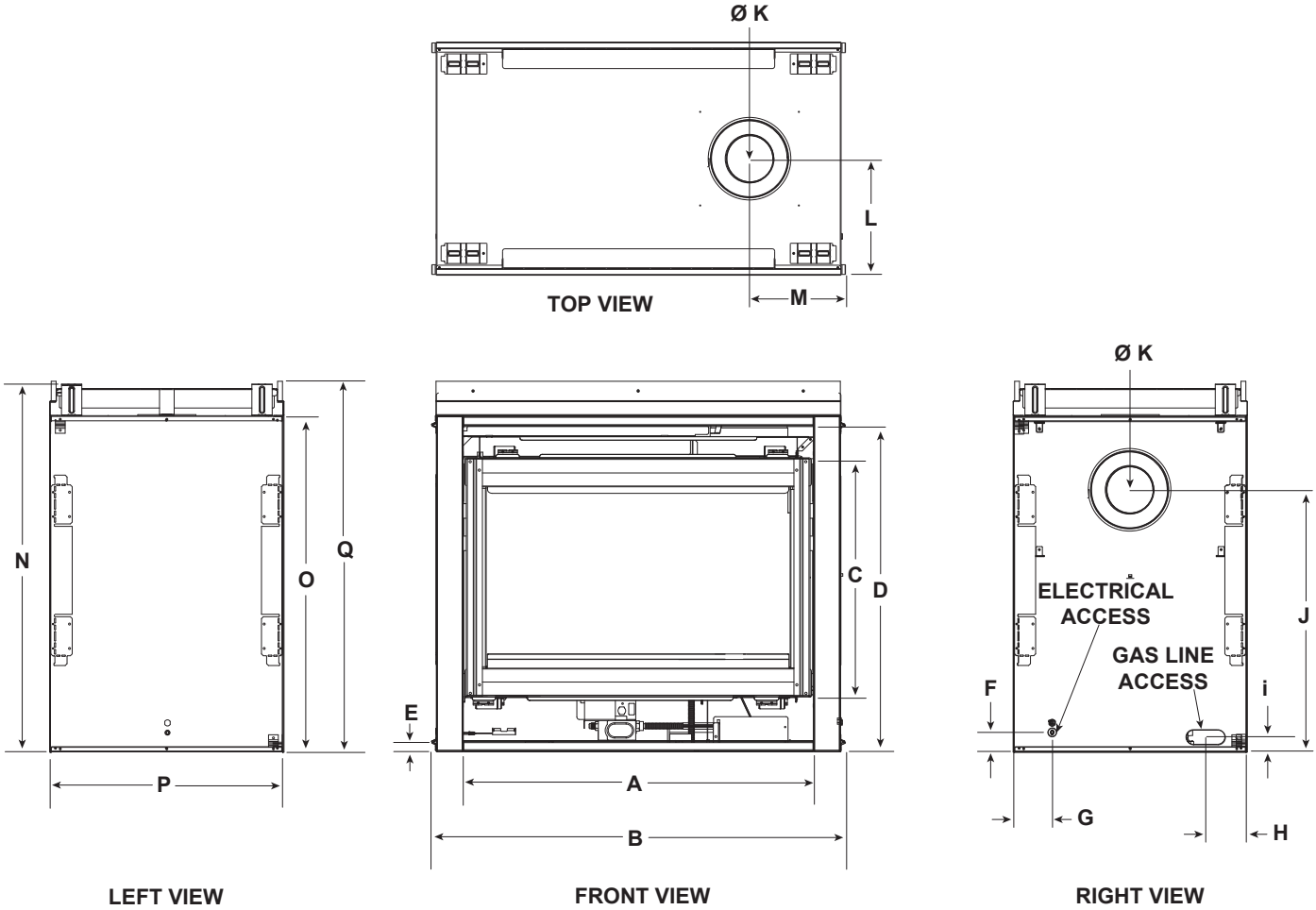

Location	Inches	Millimeters
A	36	914
B	42-1/2	1080
C	24-1/2	622
D	33-1/2	851
E	1	25
F	2-1/8	54
G	4-1/8	105
H	4-1/4	108

Location	Inches	Millimeters
I	1-1/2	38
J	27	686
K	8	203
L	12	305
M	9-1/2	241
N	38	965
O	34-5/8	880
P	24	610
Q	38-1/8	968

Figure 3.1 Appliance Dimensions - ST-DV36IN

Appliance Weight Table

Model	Pounds	Kilograms
PIER-DV36IN	220	99.8

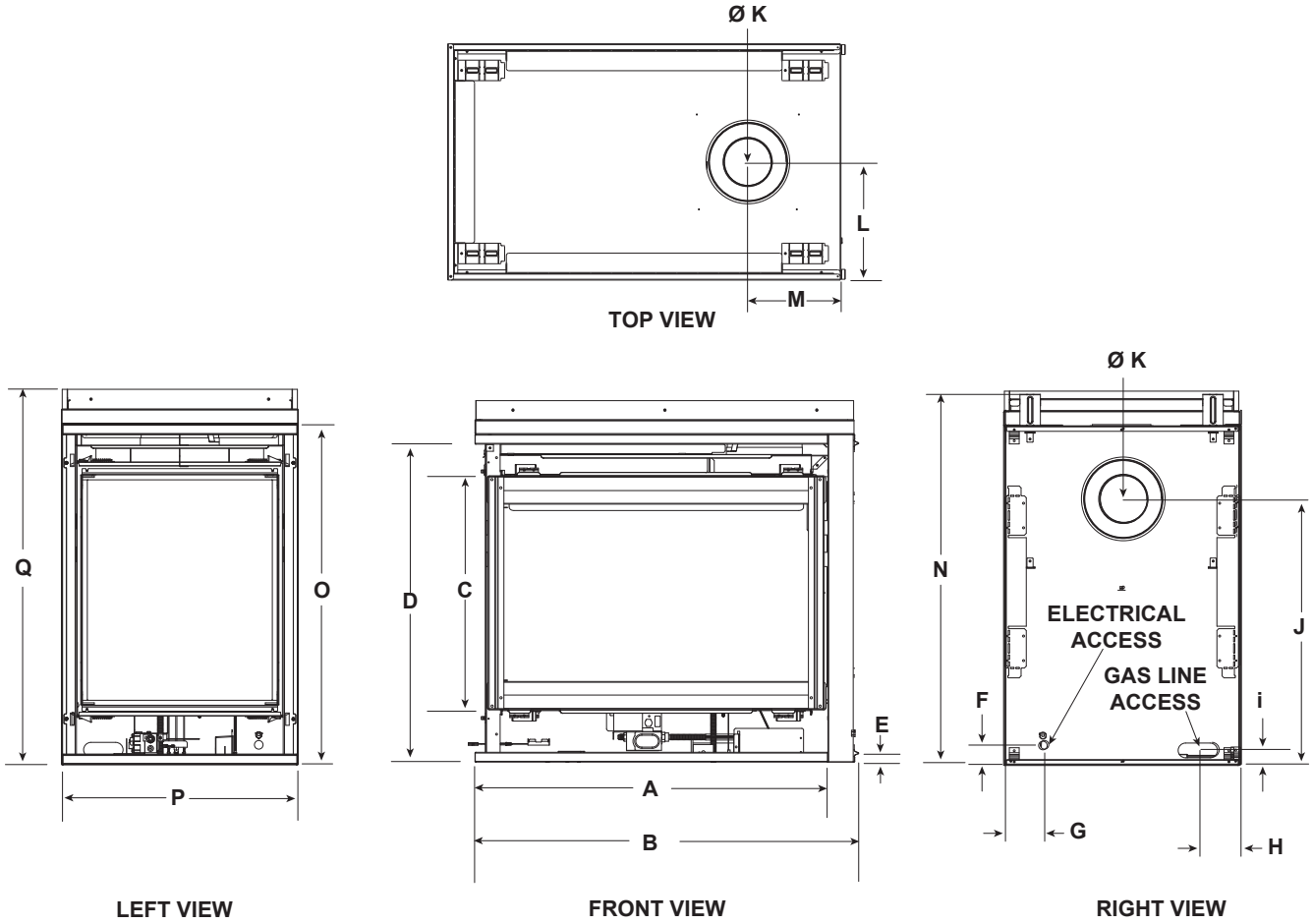

Location	Inches	Millimeters
A	37-1/8	943
B	40-1/2	1029
C	24-1/2	622
D	33-1/2	851
E	1	25
F	2-1/8	54
G	4-1/8	105
H	4-1/4	108

Location	Inches	Millimeters
I	1-1/2	38
J	27	686
K	8	203
L	12	305
M	9-1/2	241
N	38	965
O	34-5/8	880
P	24	610
Q	38-1/8	968

Figure 3.2 Appliance Dimensions - PIER-DV36IN

B. Decorative Barrier Front Dimension Diagrams

DECORATIVE FRONT MSFR-36-BK (Model: PIER-DV36IN / ST-DV36IN)

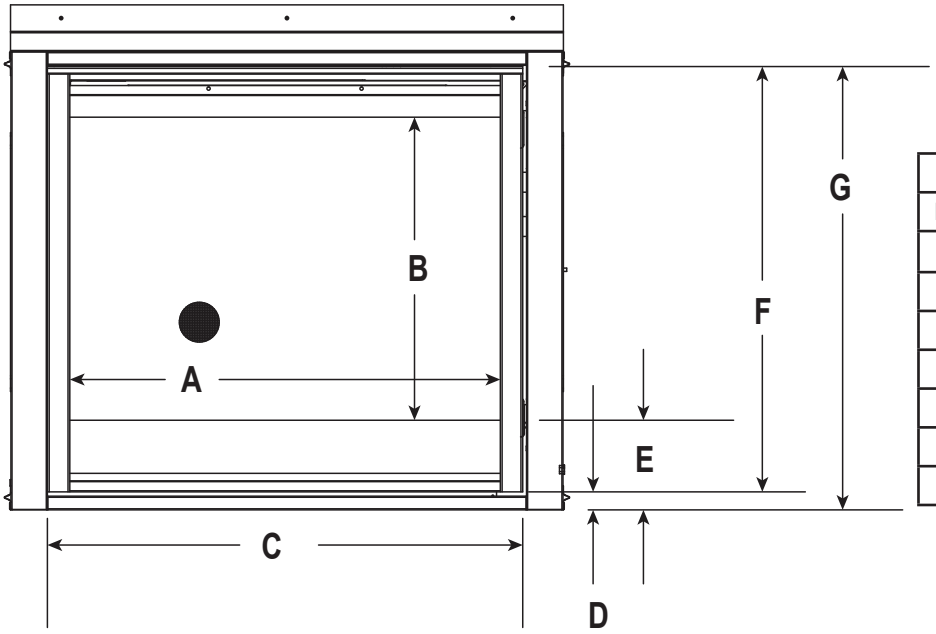

MSFR-36-BK		
Location	Inches	Millimeters
A	32-3/8	822
B	22-9/16	573
C	36-1/16	916
D	1-3/8	35
E	6-7/8	175
F	32-1/16	814
G	33-7/16	849

END PANEL MSEP-36-BK (Model: PIER-DV36IN)

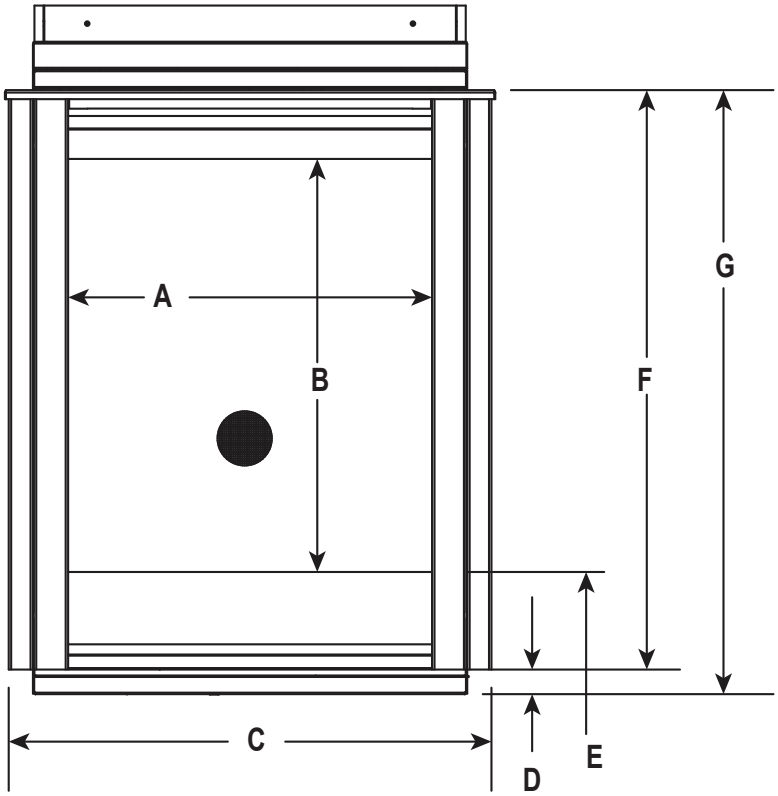

MSEP-36-BK		
Location	Inches	Millimeters
A	20-1/8	511
B	22-11/16	576
C	26-11/16	678
D	1-3/8	35
E	6-7/8	175
F	32-1/16	814
G	33-7/16	849

Figure 3.3 Decorative Barrier Front Dimensions

C. Appliance Location and Clearances to Combustibles

When selecting a location for the appliance it is important to consider the required clearances to walls. See Figure 3.4.

WARNING! Risk of Fire or Burns! *Provide adequate clearance around air openings and for service access. Due to high temperatures, the appliance should be located out of traffic and away from furniture and draperies.*

NOTICE: *Illustrations reflect typical installations and are FOR DESIGN PURPOSES ONLY. Illustrations/diagrams are not drawn to scale. Actual installation may vary due to individual design preference.*

NOTICE: *This See-Through appliance is NOT designed or approved for an indoor/outdoor application.*

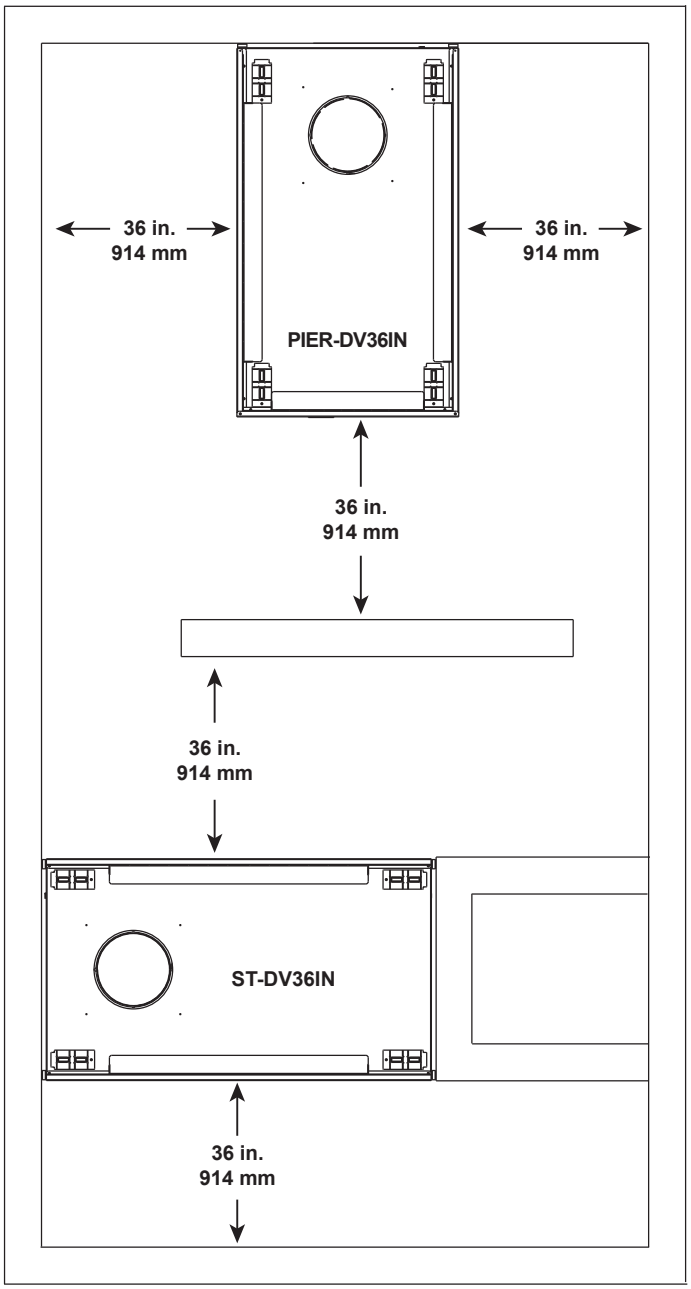

Figure 3.4 Appliance Locations

NOTICE: *Install appliance on hard metal or wood surfaces extending full width and depth.* ***DO NOT*** *install directly on carpeting, vinyl, tile or any combustible material other than wood.*

WARNING! Risk of Fire! *Maintain specified air space clearances to appliance and vent pipe:*

- Insulation and other materials must be secured to prevent accidental contact.
- The chase must be properly blocked to prevent blown insulation or other combustibles from entering and making contact with fireplace or chimney.
- Failure to maintain airspace may cause overheating and a fire.

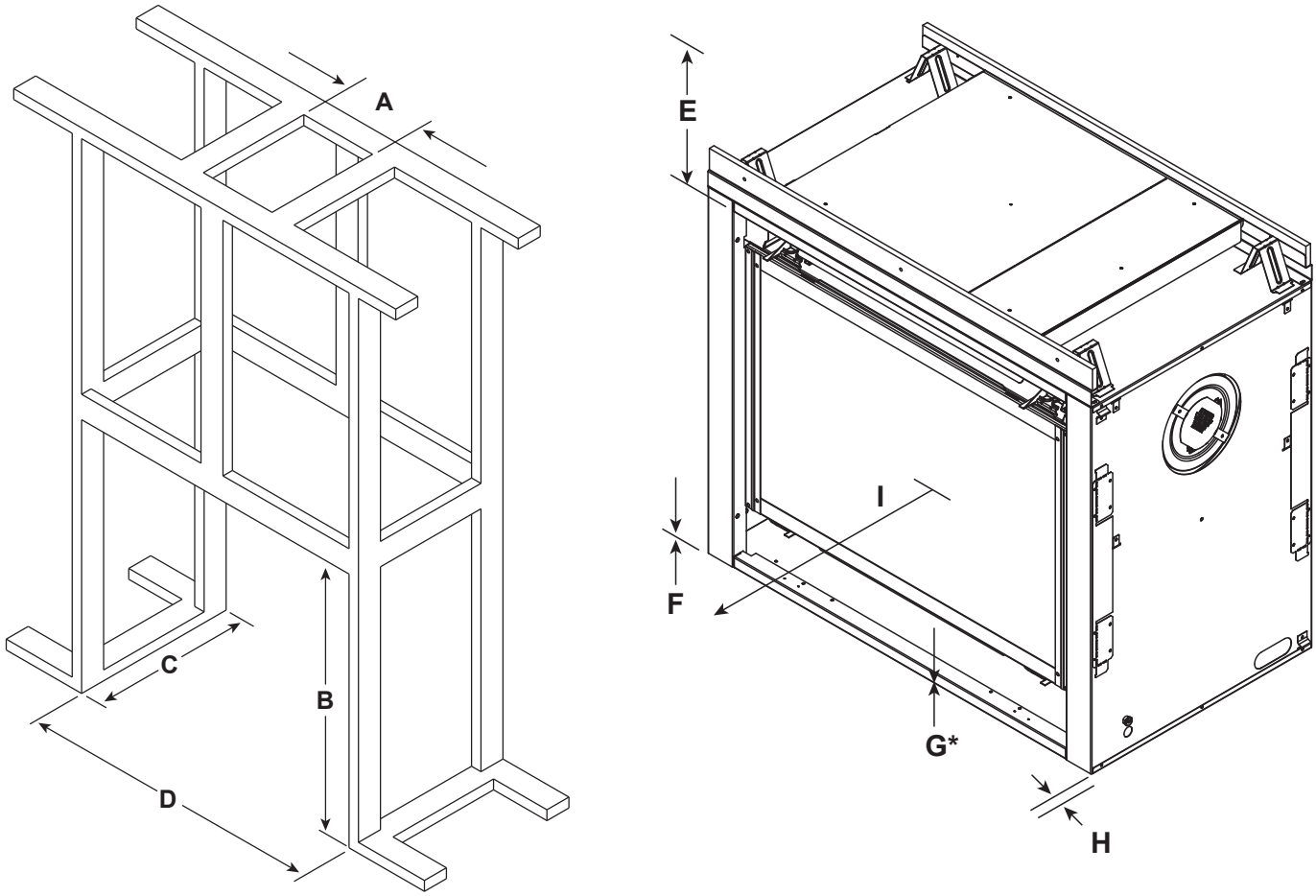

ST-DV36IN	A		B	C	D	E	F	G*	H	I
	DVP Pipe	SLP Pipe								
	Rough Opening (Width)	Rough Opening (Width)	Rough Opening (Height)	Rough Opening (Depth)	Rough Opening (Width)	Clearance to Ceiling	Combustible Floor	Combustible Flooring	Ends of Appliance	Sides of Appliance
Inches	10	9	38-1/8	23	43	31	0	0	1/2	36
Millimeters	254	229	968	584	1092	787	0	0	13	914

Adjust framing dimensions for interior sheathing (such as sheetrock).
G* For installations with vinyl flooring, see Section 3.E.

Figure 3.5 Clearances to Combustibles - ST-DV36IN

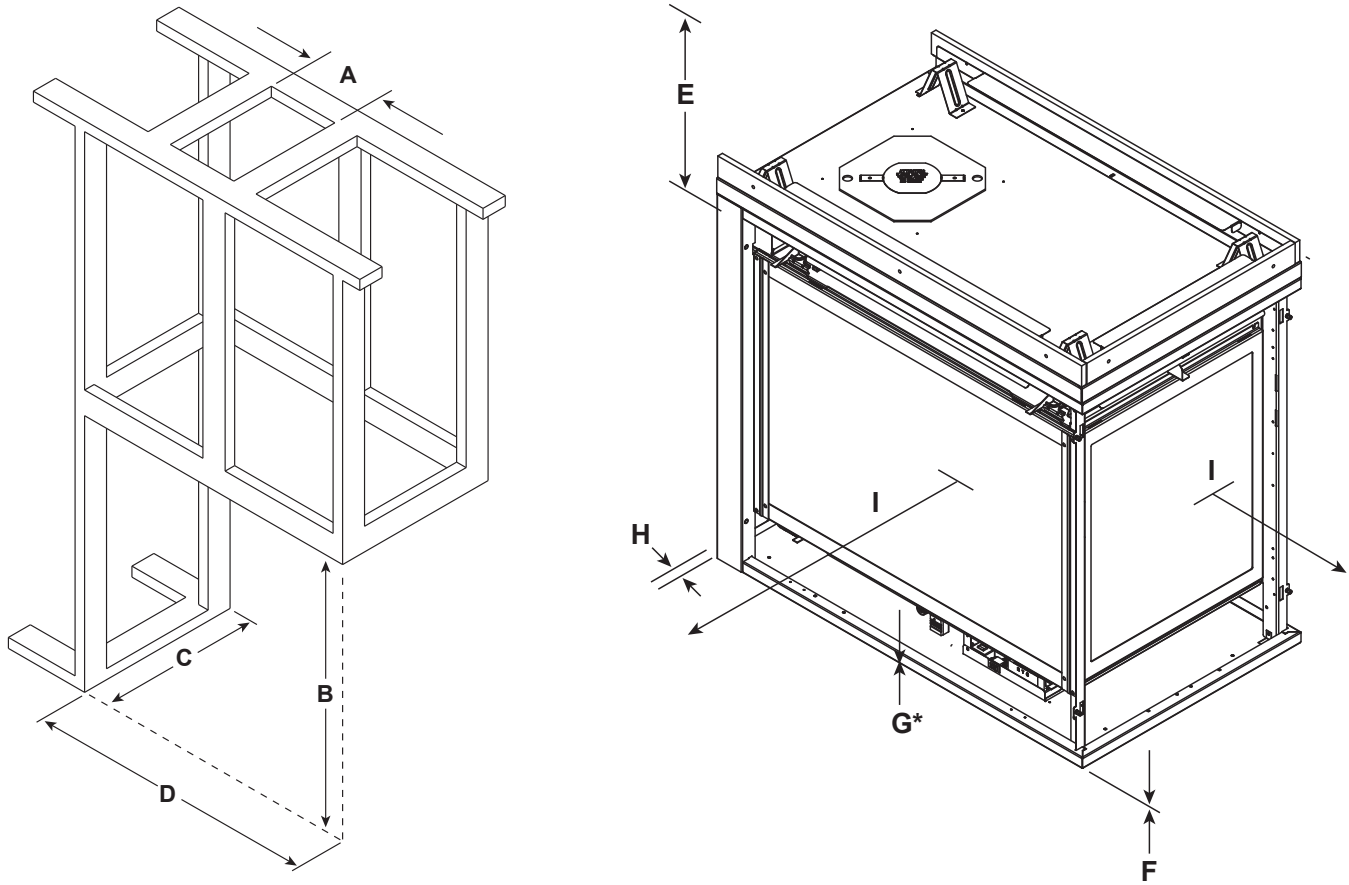

PIER-DV36IN	A		B	C	D	E	F	G*	H	I
	DVP Pipe	SLP Pipe	Rough Opening (Height)	Rough Opening (Depth)	Rough Opening (Width)	Clearance to Ceiling	Combustible Floor	Combustible Flooring	End of Appliance	Sides of Appliance
	Rough Opening (Width)	Rough Opening (Width)								
Inches	10	9	38-1/8	23	40	31	0	0	1/2	36
Millimeters	254	229	968	584	1016	787	0	0	13	914

Adjust framing dimensions for interior sheathing (such as sheetrock).
G* For installations with vinyl flooring, see Section 3.E.

Figure 3.6 Clearances to Combustibles - PIER-DV36IN

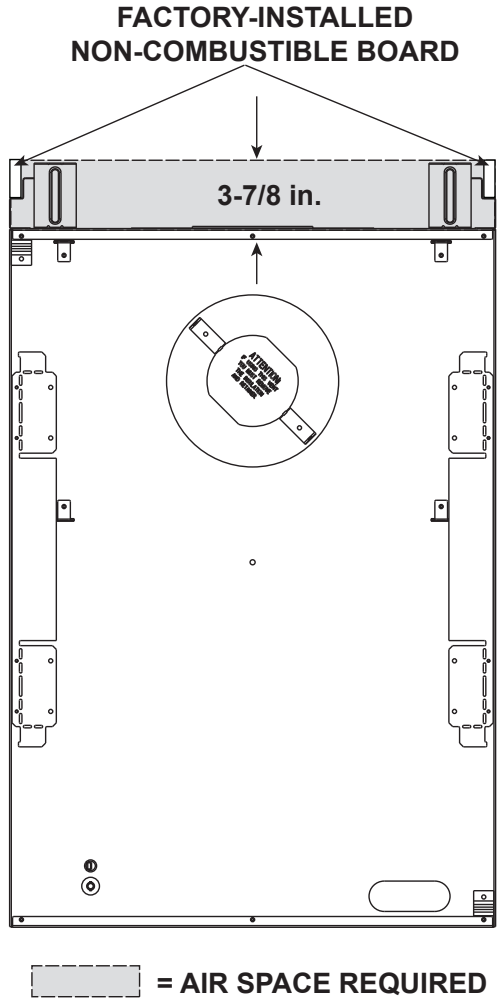

Figure 3.7 Non-Combustible Zone

D. Constructing the Appliance Chase

NOTICE: *Install appliance on hard metal or wood surfaces extending full width and depth.* ***DO NOT*** *install directly on carpeting, vinyl, or any combustible material other than wood.*

WARNING! Risk of Fire! *Maintain specified air space clearances to appliance and vent pipe:*

- *Insulation and other materials must be secured to prevent accidental contact.*
- *The chase must be properly blocked to prevent blown insulation or other combustibles from entering and making contact with fireplace or chimney.*
- *Failure to maintain airspace may cause overheating and a fire.*

A chase is a vertical box-like structure built to enclose the gas appliance and/or its vent system. In cooler climates the vent should be enclosed inside the chase.

NOTICE: *Treatment of ceiling firestops and wall shield firestops and construction of the chase may vary with the type of building. These instructions are not substitutes for the requirements of local building codes. Therefore, you MUST check local building codes to determine the requirements to these steps.*

NOTICE: Where required by code, install only sprinkler heads with a sprinkler activation temperature classified as Extra High.

- *Sprinklers inside of chase: Keep sprinkler head away from vent and chimney.*

Chases should be constructed and insulated in the same manner as the thermal envelope of the home based on the code requirements for that climate zone to prevent air leakage and draft problems. The chase is an extension of the building thermal envelope.

To further prevent drafts and air leakage, the wall shield and ceiling firestops should be sealed with caulk with a minimum of 300 ºF continuous exposure rating to seal gaps. Gas line holes and other openings should be sealed with caulk with a minimum of 300 ºF continuous exposure rating or stuffed with unfaced insulation. If the appliance is being installed on a cement surface, a layer of plywood may be placed underneath to prevent conducting cold up into the room.

Minimum height requirements for an exterior chase on a top-vented appliance are shown in Figure 3.8. Reference Figure 4.5 for additional clearances.

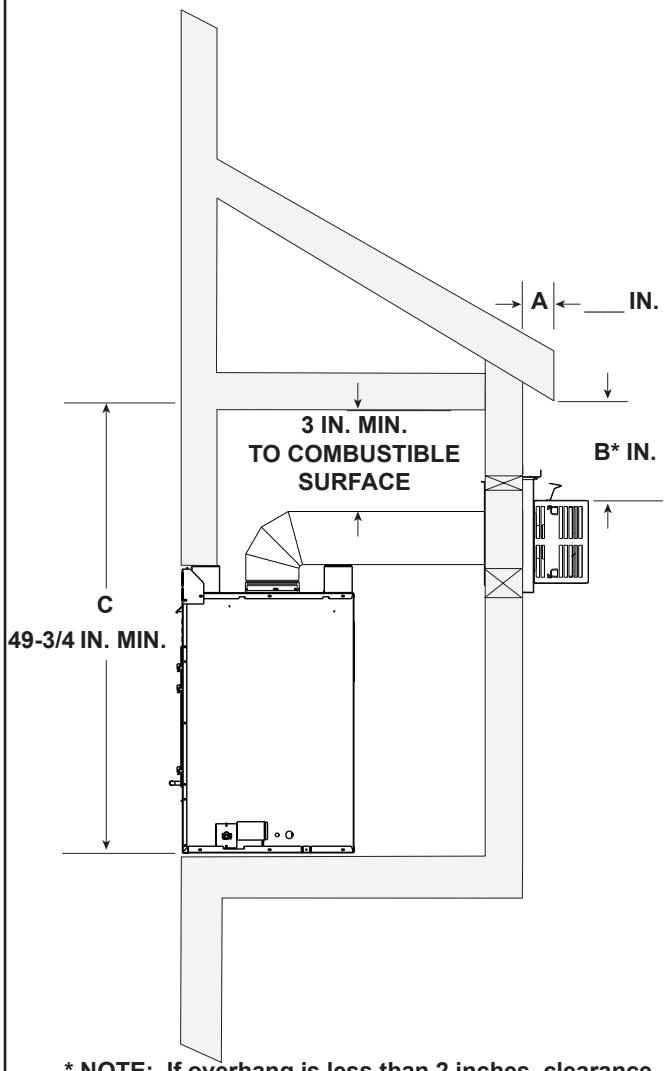

*** NOTE: If overhang is less than 2 inches, clearance from top of termination cap to bottom of overhang may be 0 inches.**

A - Measured from back of vent cap to end of overhang
B* - Measured from bottom of overhang to top of termination cap
Unventilated Soffit = 18 inches
Ventilated Soffit = 18 inches
Vinyl Soffit = 30 inches
C - Measured from bottom of appliance to combustible surface

Figure 3.8 Exterior Chase - Minimum Height Requirements

E. Floor Protection

Vinyl Flooring

Vinyl flooring is sensitive to heat. Hearth and Home Technologies does not recommend adhesive based vinyl flooring due to thermal expansion. Floating-style flooring can be used, but will reach temperatures up to 110 °F in a room with ambient temperature of 70 °F. Consult flooring specifications to ensure compatibility.

4 Termination Location and Vent Information

A. Approved Pipe

WARNING! Risk of Fire, Delayed Ignition or Asphyxiation. *This appliance requires a separate vent.* ***DO NOT*** *vent to a pipe serving any other appliance.*

This appliance is only approved for use with Hearth & Home Technologies DVP or SLP venting systems. Refer to Section 12.A for vent component information and dimensions. Only use listed decorative termination caps/shrouds with Hearth & Home Technologies approved venting systems.

DO NOT mix pipe, fittings or joining methods from different manufacturers.

The pipe is tested to be run inside an enclosed wall. There is no requirement for inspection openings at each joint within the wall.

B. Vent Termination Minimum Clearances

⚠ WARNING

Fire Risk.

Maintain vent clearance to combustibles as specified.

- **DO NOT** pack air space with insulation or other materials.

Failure to keep insulation or other materials away from vent pipe could cause overheating and fire.

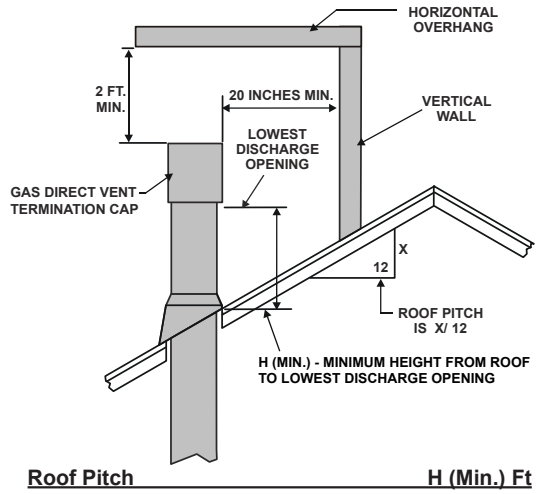

Roof Pitch	H (Min.) Ft
Flat to 6/12	1.0*
Over 6/12 to 7/12	1.25*
Over 7/12 to 8/12	1.5*
Over 8/12 to 9/12	2.0*
Over 9/12 to 10/12	2.5*
Over 10/12 to 11/12	3.25
Over 11/12 to 12/12	4.0
Over 12/12 to 14/12	5.0
Over 14/12 to 16/12	6.0
Over 16/12 to 18/12	7.0
Over 18/12 to 20/12	7.5
Over 20/12 to 21/12	8.0

* H minimum may vary depending on regional snowfall. Refer to local codes.

Figure 4.1 Minimum Height From Roof to Lowest Discharge Opening

A	B
6 in. (minimum) up to 20 in. *152 mm/508 mm*	18 in. minimum *457 mm*
20 in. and over	0 in. minimum

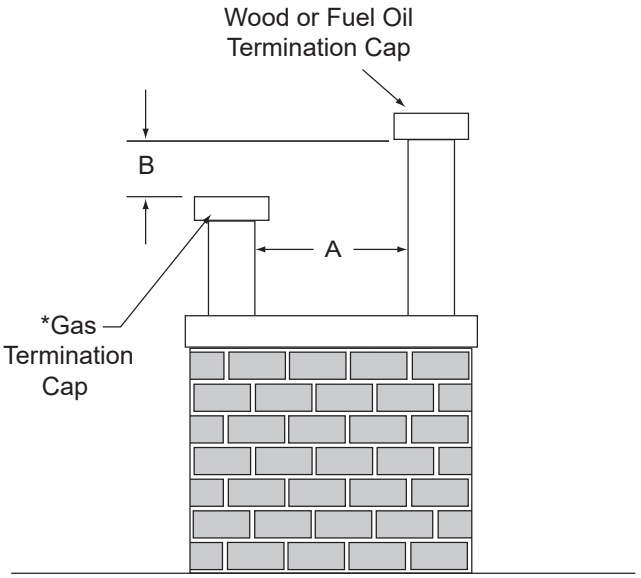

* If two gas terminations are present, they may be level (B = 0 inches) provided A is a minimum of 6 inches.

Figure 4.2 Staggered Termination Caps

CAUTION! Risk of Burns! *Termination caps are HOT, consider proximity to doors, traffic areas or where people may pass or gather (sidewalk, deck, patio, etc.). Listed cap shields available. Contact your dealer.*

- Local codes or regulations may require different clearances.
- Hearth & Home Technologies assumes no responsibility for the improper performance of the appliance when the venting system does not meet these requirements.
- Vinyl protection kits are suggested for use with vinyl siding.
- Measure horizontal and vertical termination cap clearances as noted in Figure 4.3 and Figure 4.4.

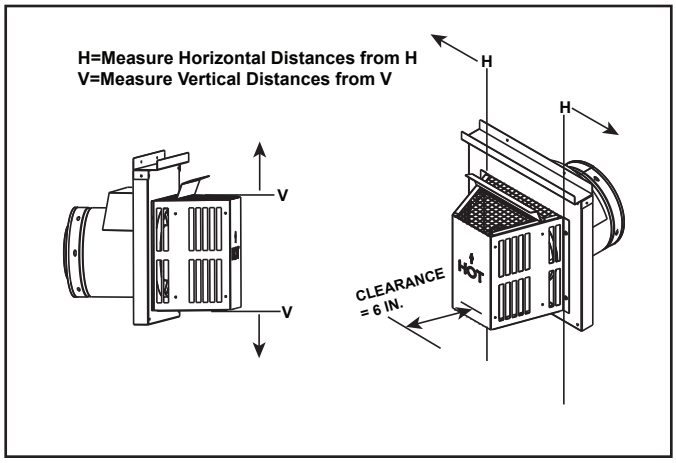

Figure 4.3

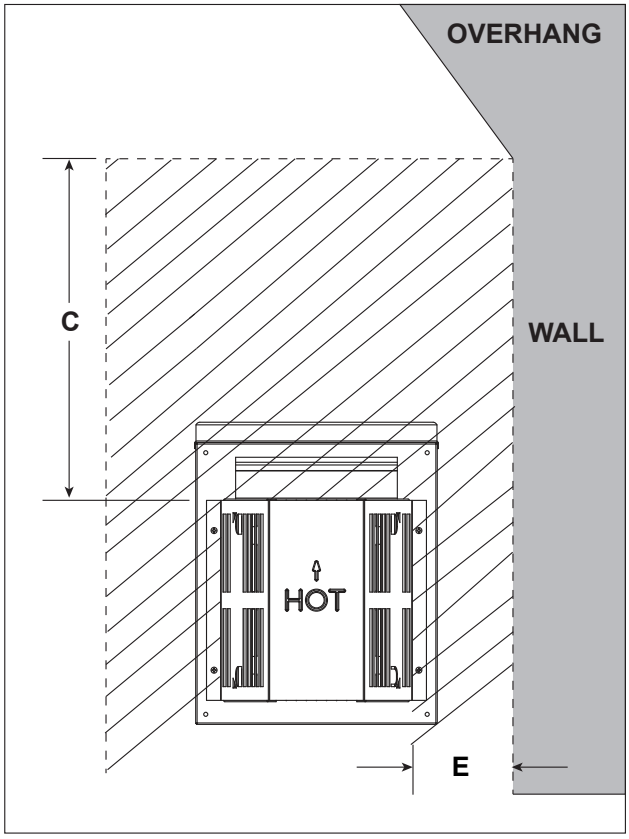

C and E dimensions are defined in Figure 4.5.

Figure 4.4 Measure Horizontal and Vertical Termination Clearance to Trapezoid Portion of Cap

C. Vent Terminal Clearances

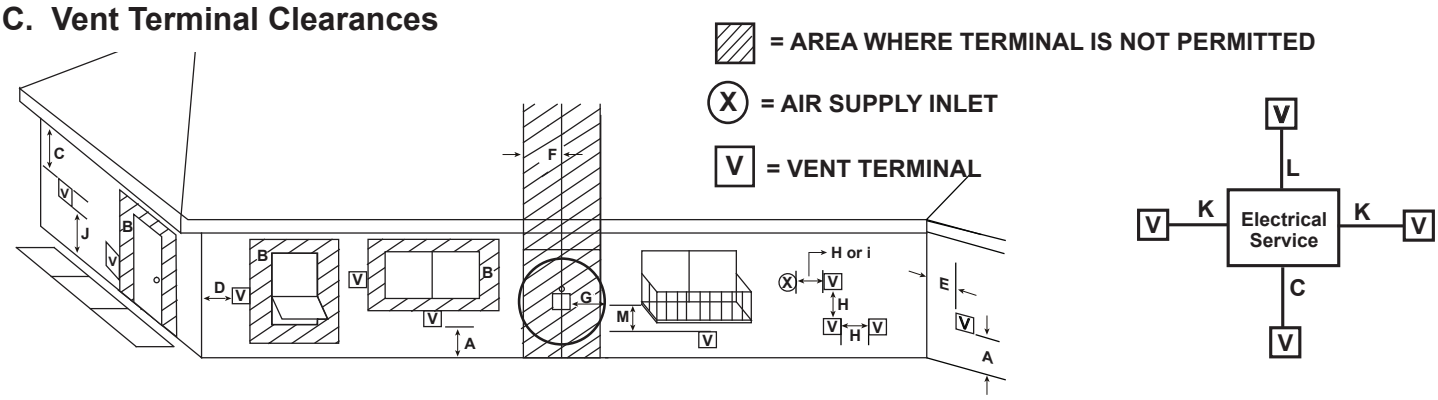

U.S.A. Installations: In accordance with the current ANSI Z223.1/NFPA 54, National Fuel Gas Code.
Canadian Installations: In accordance with the current CSA B149.1, Natural Gas and Propane Installation Code.

		U.S.A.	CANADA
A	Clearance above grade,veranda, porch, deck, balcony or roof.	12 in. (305 mm)	12 in. (305 mm)
B	Clearance to window or door that may be opened, or to permanently closed window	9 in. min. (229 mm)	12 in. min. (305 mm)
C	clearance below unventilated soffit	18 in. (457 mm)	18 in. (457 mm)
	clearance below ventilated soffit	18 in. (457 mm)	18 in. (457 mm)
	clearance below any vinyl soffits and electrical service	30 in. (762 mm)	30 in. (762 mm)
D	clearance to outside corner	6 in. (152 mm)	6 in. (152 mm)
E	clearance to inside corner	6 in. (152 mm)	6 in. (152 mm)
F	clearance to each side of center line extended above gas meter/regulator assembly	Clearance in accordance with local installation codes and the requirements of the gas supplier.	3 ft (914 mm) within a height 15 ft (4.5 m) above the meter/regulator assembly
G	clearance to gas service regulator vent outlet	3 ft (914 mm)	3 ft (914 mm)
H	clearance to non-mechanical air supply inlet to building or the combustion air inlet to any other appliance termination (mechanical or non-mechanical)	12 in. min.	12 in. min.
I	clearance to a mechanical (powered) air supply inlet ***(All mechanical air intakes within 10 feet of a horizontal termination cap must be a minimum of 3 feet below termination.)	3 ft (914 mm)***	6 ft (1.8m)
J	On **public** property: clearance above paved sidewalk or a paved driveway.	7 ft (2.1 m)	7 ft (2.1 m)**
	**(A vent shall not terminate directly above a sidewalk or paved driveway which is located between two single family dwellings and serves both dwellings.)		
K	clearance from sides of electrical service	6 in. (152 mm)	6 in. (152 mm)
	Location of the vent termination must not interfere with access to the electrical service.		
L	clearance above electrical service	12 in. (305 mm)	12 in. (305 mm)
	Location of the vent termination must not interfere with access to the electrical service.		
M	clearance under veranda, porch, deck, balcony or overhang *(Permitted only if veranda, porch, deck, or balcony is fully open on a minimum of two sides beneath the floor.)	18 in. (457 mm)	12 in. (305 mm)*
	vinyl or composite overhang	42 in. (1067 mm)	42 in. (1067 mm)

Figure 4.5 Minimum Clearances for Termination

D. Use of Elbows

Diagonal runs have both vertical and horizontal vent aspects when calculating the effects. Use the rise for the vertical aspect and the run for the horizontal aspect. See Figure 4.6.

Two 45º elbows may be used in place of one 90º elbow. On 45º runs, one foot of diagonal is equal to 8-1/2 inch (216 mm) horizontal run and 8-1/2 inch (216 mm) vertical run. A length of straight pipe is allowed between two 45º elbows. See Figure 4.6.

Figure 4.7 shows the vertical and horizontal offsets for DVP or SLP elbows.

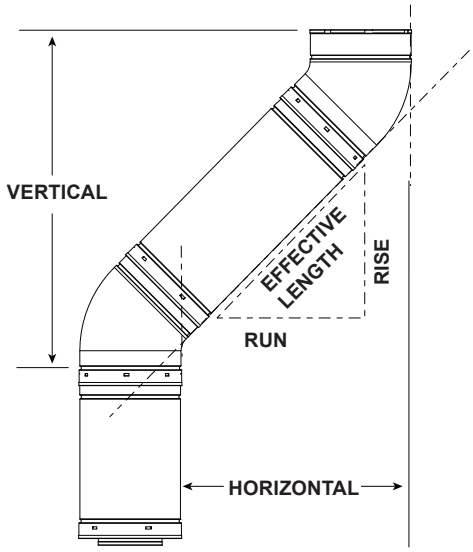

SLP Pipe	Effective Length		Rise/Run	
	Inches	Millimeters	Inches	Millimeters
SLP4	4	102	2-3/4	70
SLP6	6	152	4-1/4	108
SLP12	12	305	8-1/2	216
SLP24	24	610	17	432
SLP36	36	914	25-1/2	648
SLP48	48	1219	34	864
SLP6A	3 to 6	76 to 152	2-1/8-4-1/4	54-108
SLP12A	3 to 12	76 to 305	2-1/8-8-1/2	54-216

DVP Pipe	Effective Length		Rise/Run	
	Inches	Millimeters	Inches	Millimeters
DVP4	4	102	2-3/4	70
DVP6	6	152	4-1/4	108
DVP12	12	305	8-1/2	216
DVP24	24	610	17	432
DVP36	36	914	25-1/2	648
DVP48	48	1219	34	864
DVP6A	3 to 6	76 to 152	2-1/8-4-1/4	54-108
DVP12A	3 to 12	76 to 305	2-1/8-8-1/2	54-216

Figure 4.6

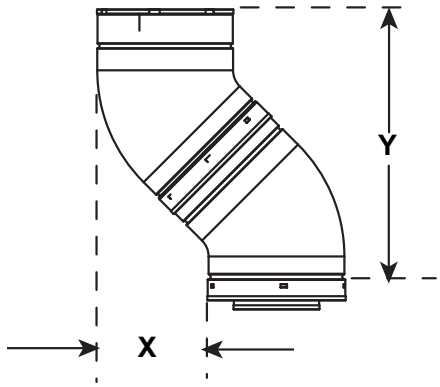

Vent Type	X		Y	
	Inches	Millimeters	Inches	Millimeters
DVP	6-5/8	168	16-1/2	419
SLP	5-1/4	133	11-3/8	289

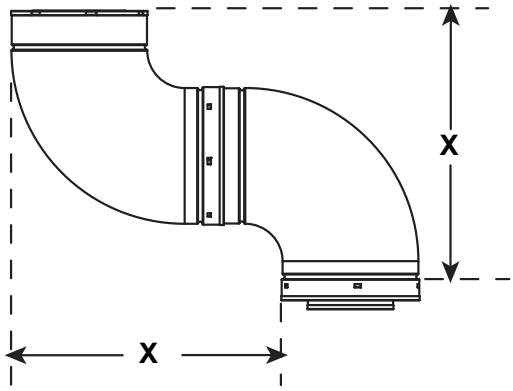

Vent Type	X	
	Inches	Millimeters
DVP	16-1/4	413
SLP	11-1/4	286

Figure 4.7 Vertical and Horizontal Offset for DVP and SLP Elbows

E. Vent Diagrams

To replace the first starter elbow with two 45° elbows, refer to Figure 4.8. All other 90° elbows can be replaced with two 45° elbows.

General Rules:

- When penetrating a combustible wall, a wall shield firestop must be installed.
- When penetrating a combustible ceiling, a ceiling firestop must be installed.
- Horizontal runs of vent do not require vertical rise; horizontal runs may be level.
- It is recommended that the horizontal termination cap have a 1/4 inch downward slant to allow any moisture in cap to be released. See Figure 4.8.

If venting configuration differs from the vent diagrams on the following pages (Figure 4.12-4.29), these rules also apply:

- SUBTRACT 3 ft from the total H measurement for each 90º elbow installed horizontally.
- SUBTRACT 1-1/2 ft from the total H measurement for each 45º elbow installed horizontally.
- A maximum of three 90º elbows (or six 45º elbows) may be used in any vent configuration. Some elbows may be installed horizontally such as in Figure 4.15.
- Elbows may be placed back to back anywhere in the system.
- Any 90º elbow may be replaced with two back to back 45º elbows.
- 2 x 45° elbow jog directly off the top of the fireplace is allowed but has no V or H value, is permitted when reducing to SLP pipe, and DOES NOT count towards total elbow count.

Note: The ST-DV36IN and PIER-DV36IN fireplaces can adapt to SLP series vent pipe, if desired.

When venting off the top of the unit, use a DVP-2SL adapter and a minimum 48 inch vertical section of SLP series vent pipe.

A DVP-SLP24 adapter may also be used with a 24 inch vertical section of SLP series vent pipe.

After the 48 inch vertical section, the venting table rules must be followed. The first 48 inch **vertical** section is NOT counted as part of the vertical components in the table. It is still counted as part of the overall maximum run. All venting table rules for the vent run must still be followed.

Example: DVP pipe 1 ft. min. vertical = 3 ft. max. horizontal
SLP pipe 5 ft. min. vertical = 3 ft. max. horizontal

Top Vent Horizontal Termination Two 45° Elbows

Installation requirements to replace the first 90° elbow with two 45° elbows:

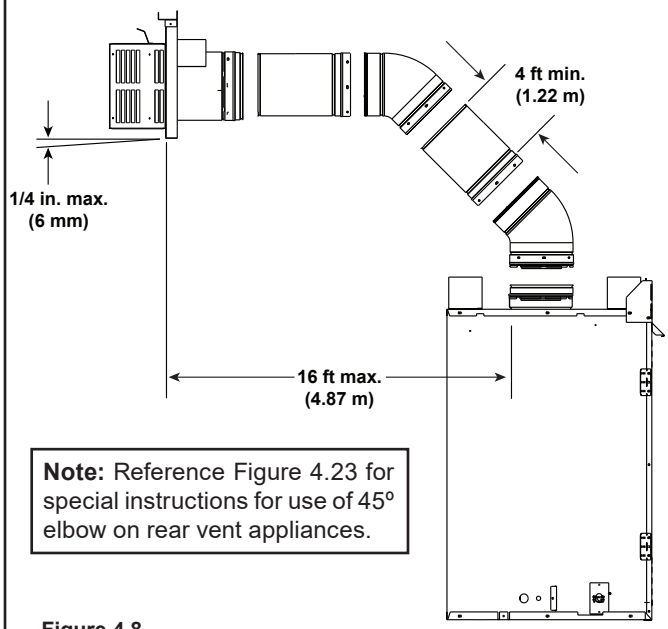

Note: Reference Figure 4.23 for special instructions for use of 45º elbow on rear vent appliances.

Figure 4.8

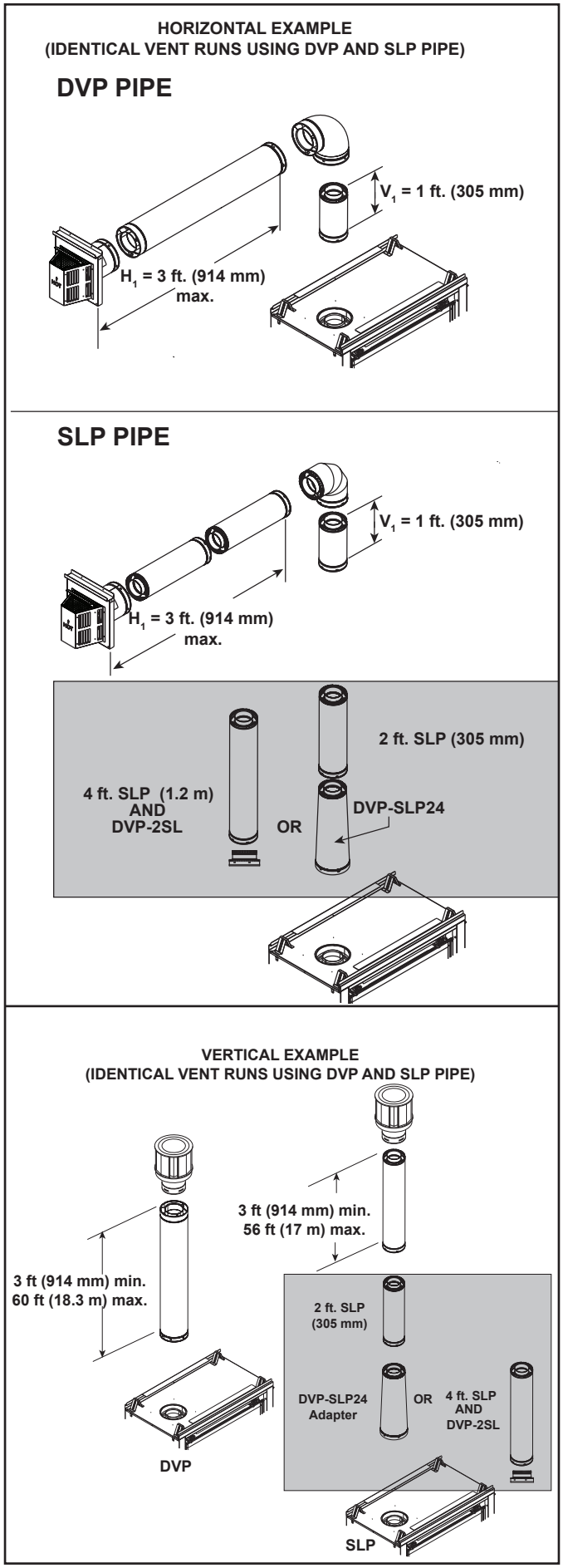

Figure 4.9 Adapt DVP Pipe to SLP Using DVP-SLP24 & DVP-2SL

Measuring Standards:

Vertical and horizontal measurements listed in the vent diagrams and clearances for termination were made using the following standards:

- Pipe measurements are shown using the effective length of pipe. See Section 12.A (Figure 12.1 for DVP, Figure 12.8 for SLP) for information on effective length of pipe components.
- Horizontal terminations are measured to the outside mounting surface (flange of termination cap). See Figure 4.10.
- Vertical terminations are measured to top of last section of pipe. See Figure 4.11.
- Horizontal pipe installed level with no rise.

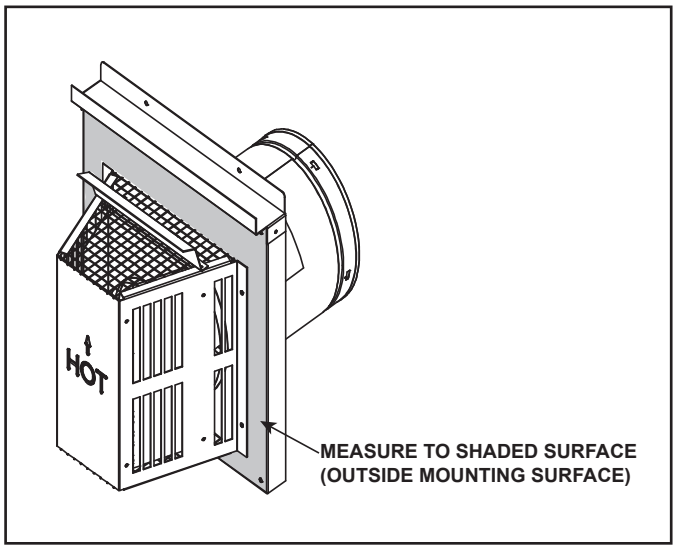

Figure 4.10 Measure to Outside Mounting Surface

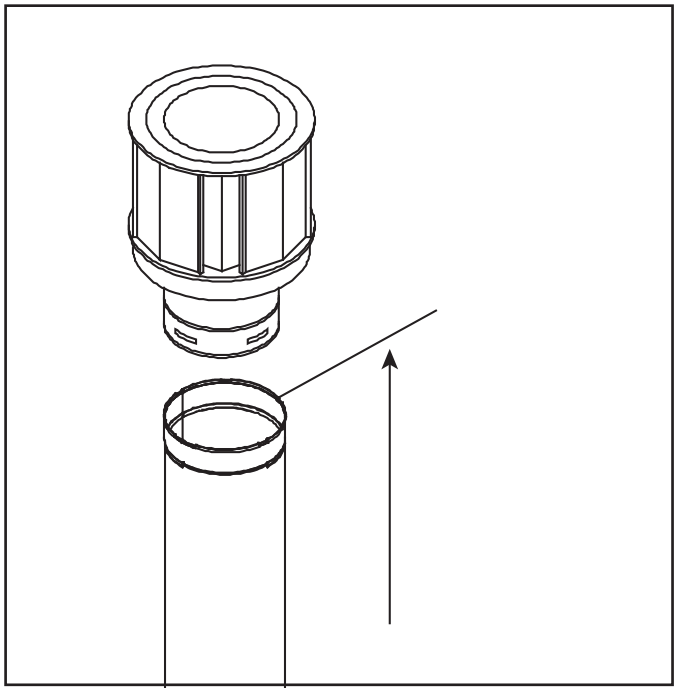

Figure 4.11 Measure to Top of Last Section of Pipe

Top Vent - Horizontal Termination

One Elbow

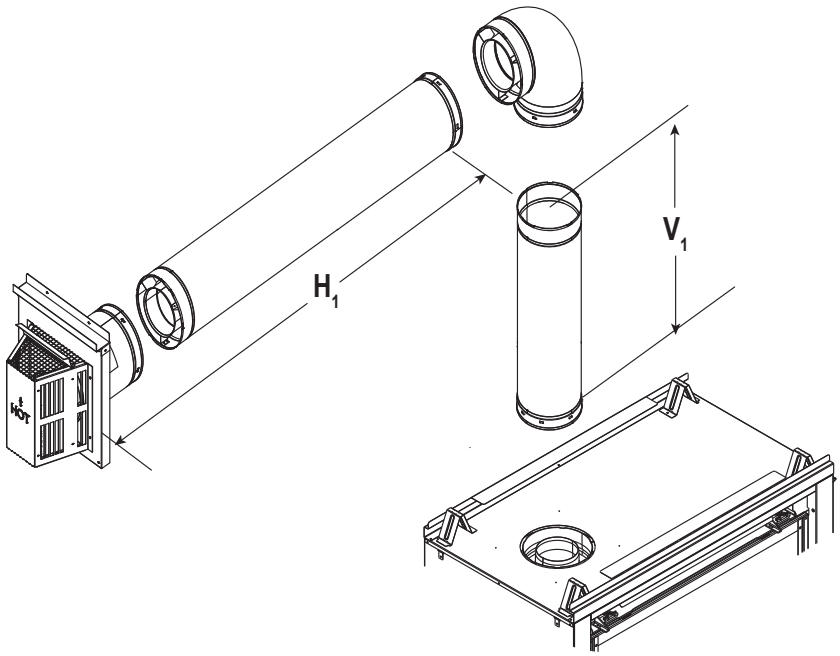

V_1 Minimum		H_1 Maximum	
Elbow only		1-1/2 ft.	457 mm
6 in.	152 mm	2-1/2 ft.	610 mm
1 ft.	305 mm	3 ft.	914 mm
2 ft.	610 mm	6 ft	1.8 m
3 ft.	914 mm	9 ft.	2.7 m
4 ft.	1.2 m	12 ft.	3.7 m
5 ft.	1.5 m	15 ft.	4.6 m
6 ft.	1.8 m	18 ft.	5.5 m
$V_1 + H_1$ = 50 ft. (15.2 m) Maximum H_1 = 18 ft. (5.5 m) Maximum			

Figure 4.12

Two Elbows

V_1 Minimum		$H_1 + H_2$ Maximum	
Elbow only		6 in.	152 mm
1 ft.	305 mm	2 ft.	610 mm
2 ft.	610 mm	4 ft.	1.2 m
3 ft.	914 mm	9 ft.	2.7 m
4 ft	1.2 m	12 ft.	3.7 m
5 ft.	1.5 m	15 ft.	4.6 m
6 ft.	1.8 m	18 ft.	5.5 m
$V_1 + H_1 + H_2$ = 50 ft. (15.2 m) Maximum $H_1 + H_2$ = 18 ft. (5.5 m) Maximum			

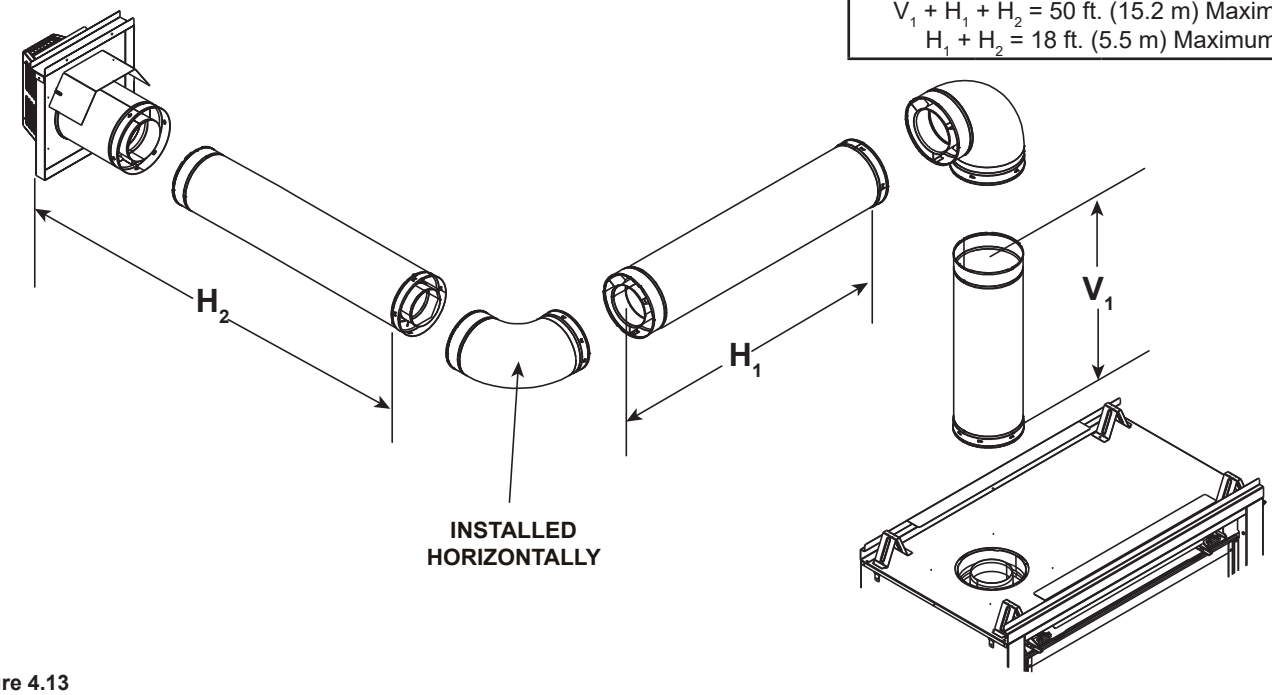

Figure 4.13

Top Vent - Horizontal Termination - (continued)

Three Elbows

V_1 Minimum		H_1 Maximum		V_2 Minimum		H_2 Maximum		$V_1 + V_2$ Minimum		$H_1 + H_2$ Maximum	
Elbow only		1 ft.	305 mm	6 in.	152 mm	1 ft.	305 mm	6 in.	152 mm	1 ft.	305 mm
6 in.	152 mm	3 ft.	914 mm	6 in.	152 mm	2 ft.	610 mm	1 ft.	305 mm	3 ft.	914 mm
1 ft.	305 mm	6 ft	1.8 m	1 ft.	305 mm	6 ft	1.8 m	2 ft.	610 mm	12 ft.	3.7 m
2 ft.	610 mm	10 ft.*	3 m	2 ft.	610 mm	10 ft.*	3 m	4 ft	1.2 m	18 ft.	5.5 m
3 ft.	914 mm	12 ft.*	3.7 m	3 ft.	914 mm	12 ft.*	3.7 m	6 ft	1.8 m	18 ft	5.5 m
*$H_1 + H_2$ = 18 ft. (5.5 m) Maximum $V_1 + V_2 + H_1 + H_2$ = 50 ft. (15.2 m) Maximum											

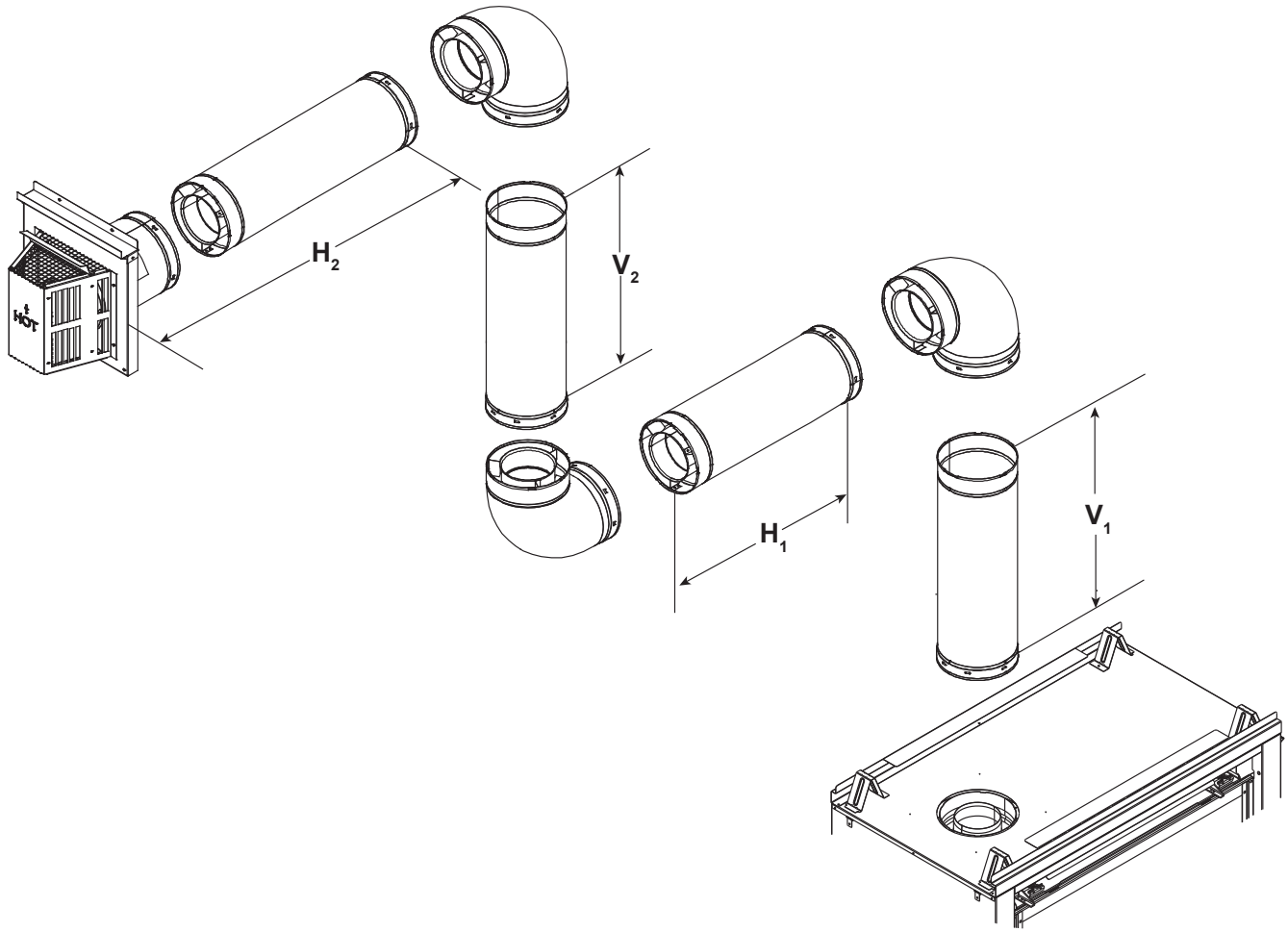

Figure 4.14

Top Vent - Horizontal Termination - (continued)

Three Elbows

V_1 Minimum		$H_1 + H_2 + H_3$ Maximum	
Elbow		not allowed	
6 in.	152 mm	not allowed	
1 ft.	305 mm	1 ft.	305 mm
2 ft.	610 mm	2 ft.	610 mm
3 ft.	914 mm	3 ft.	914 mm
4 ft.	1.2 m	4 ft.	1.2 m
5 ft.	1.5 m	5 ft.	1.5 m
6 ft.	1.8 m	6 ft.	1.8 m
$V_1 + H_1 + H_2 + H_3$ = 50 ft. (15.2 m) Maximum $H_1 + H_2 + H_3$ = 18 ft. (5.5 m) Maximum			

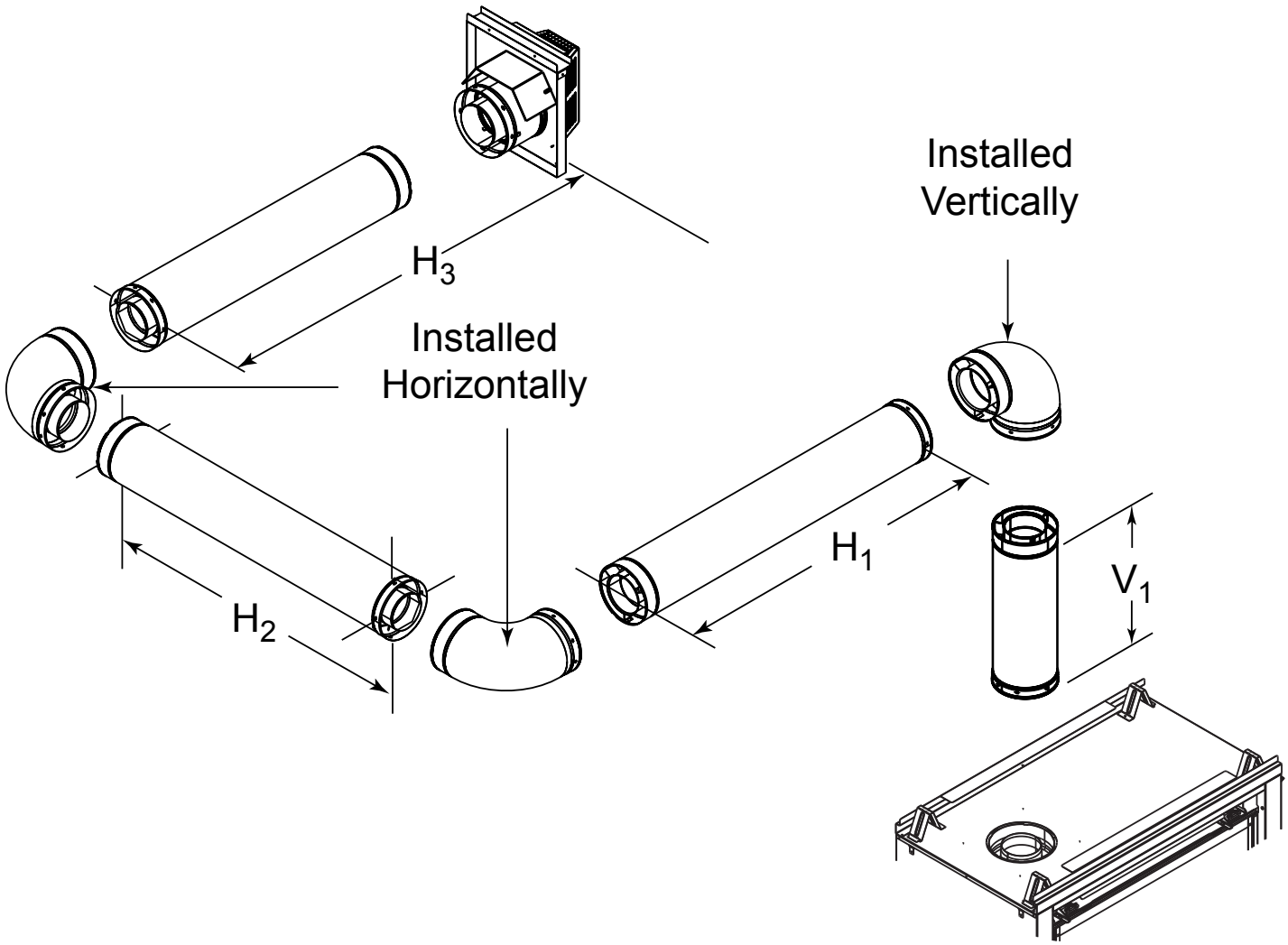

Figure 4.15

Top Vent - Vertical Termination

No Elbow

V_1 = 60 ft. Max. (18.3 m)
V_1 = 3 ft. Min. (914 mm)

NOTE: If installing a vertical vent/ termination off the top of the appliance, the optional vertical termination baffle should be used.

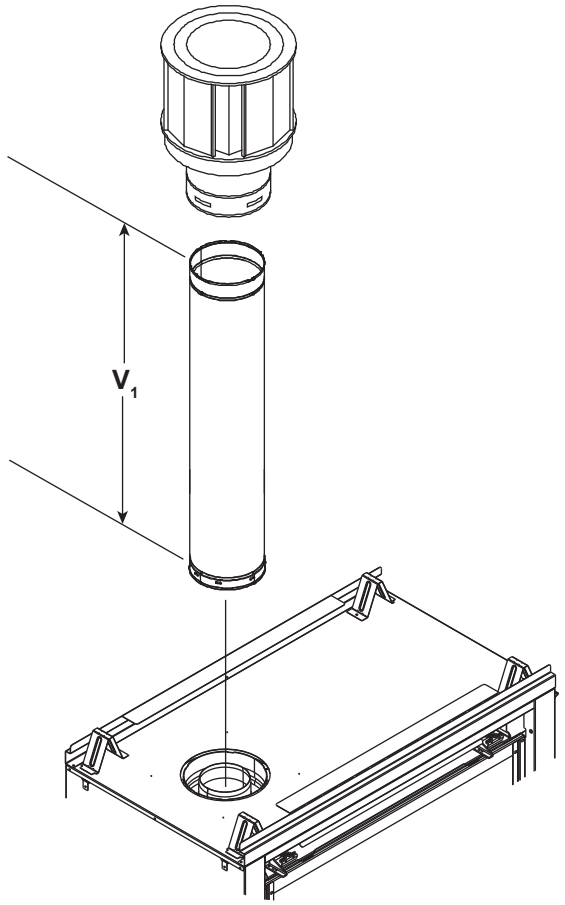

Figure 4.16

Exhaust restrictors are recommended for these vertically terminated products which have excessive draft. Exhaust restrictors will compensate for high draft, and restore visual flame height. If the vent configuration has a total vertical of 10-60 feet, an exhaust restrictor may be needed. The exhaust restrictor can be located in the appliance manual bag.

Exhaust restrictor Instructions

1. Remove metal refractory panel and exhaust baffle from pilot side of appliance. To remove the refractory panel use a 1/4 inch nut driver and remove the two screws that secure it in place. To remove the exhaust baffle, remove the three screws securing it in place. See Figure 4.17.

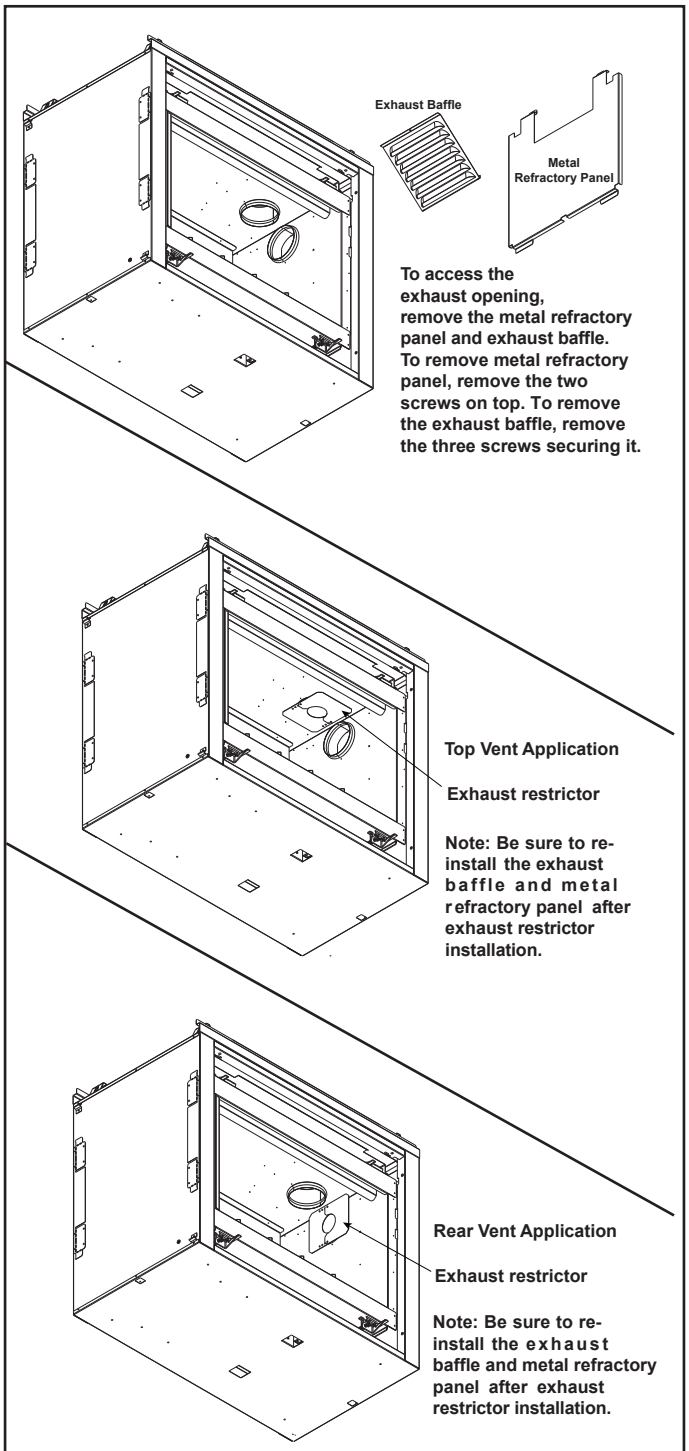

Figure 4.17

2. Break the exhaust restrictor into two pieces. Do this by bending the part back and forth until it breaks (see Figure 4.18).

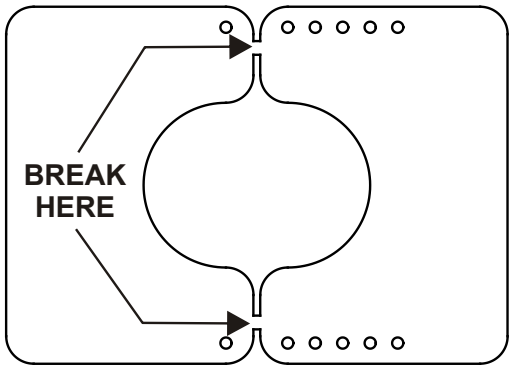

Figure 4.18 Exhaust Restrictor

3. Use Table 4.1 to match the amount of vertical you have in the system to find the appropriate position to set the exhaust restrictor. See Figure 4.19.

Vertical	TOP VENT		REAR VENT	
	NG	Propane	NG	Propane
10 ft.	1-1	1-1	1-1	1-1
20 ft.	2-2	2-2	2-2	2-2
30 ft.	2-2	2-2	2-2	2-2
40 ft.	3-3	3-3	3-3	3-3
50 ft.	3-3	3-3	3-3	3-3
60 ft.	3-3	3-3	3-3	3-3

Table 4.1

Note: If the DVP-2SL and DVP-SLP24 adapter and SLP pipe is used, you MUST subtract one number from the table above.

Example: Top vent 60 ft vertical with DVP pipe = 3-3
Top vent 60 ft vertical with SLP pipe = 2-2

4. Center the exhaust restrictor in the open end of the exhaust outlet and secure through the slots on the exhaust restrictor with the 2-1/4 in. self-tapping screws provided in the appliance manual bag.
5. Reinstall the exhaust baffle and the refractory panel.

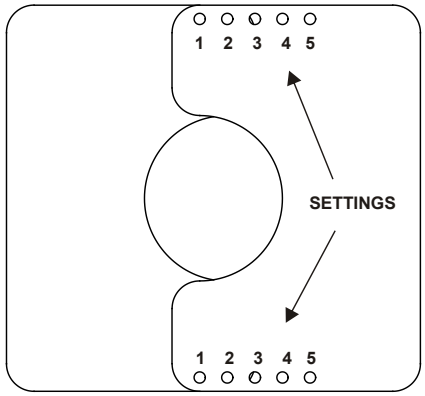

Figure 4.19

Two Elbows

V_1		H_1 Maximum		V_2	$V_1 + V_2$ Minimum	
Elbow Only		2-1/2 ft.	762 mm	*	*	*
2 ft.	607 mm	6 ft.	1.8 m	*	*	*
4 ft.	1.2 m	12 ft.	3.7 m	*	*	*
6 ft.	1.8 m	18 ft.	5.5 m	*	*	*
$V_1 + V_2 + H_1$ = 50 ft (15.2 m) Maximum *No specific restrictions on this value EXCEPT $V_1 + V_2 + H_1$ cannot exceed 50 ft (15.2 m)						

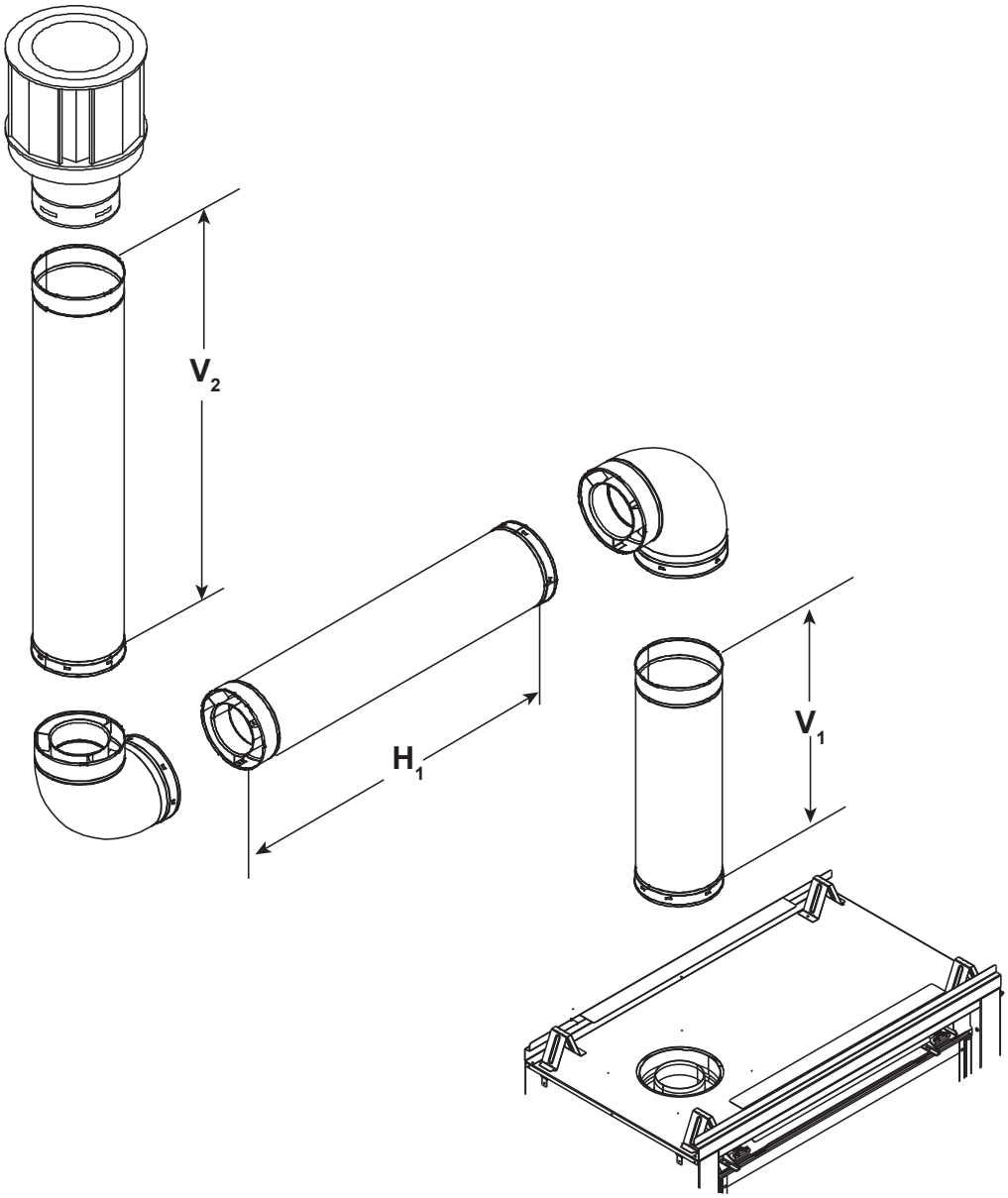

Figure 4.20

Three Elbows

V_1		$H_1 + H_2$		V_2	$V_1 + V_2$ Minimum		$H_1 + H_2$ Maximum	
ELBOW ONLY		1 ft.	305 mm	*	*	*	1 ft.	305 mm
1 ft.	305 mm	2 ft.	610 mm	*	*	*	2 ft.	610 mm
2 ft.	610 mm	4 ft	1.2 m	*	*	*	4 ft	1.2 m
3 ft.	914 mm	9 ft.	2.7 m	*	*	*	9 ft.	2.7 m
4 ft	1.2 m	12 ft.	3.7 m	*	*	*	12 ft.	3.7 m
6 ft.	1.8 m	18 ft.	5.5 m	*	*	*	18 ft.	5.5 m
$H_1 + H_2$ = 18 ft (5.5 m) Maximum *No specific restrictions on this value EXCEPT $V_1 + V_2 + H_1 + H_2$ cannot exceed 50 ft (15.2 m)								

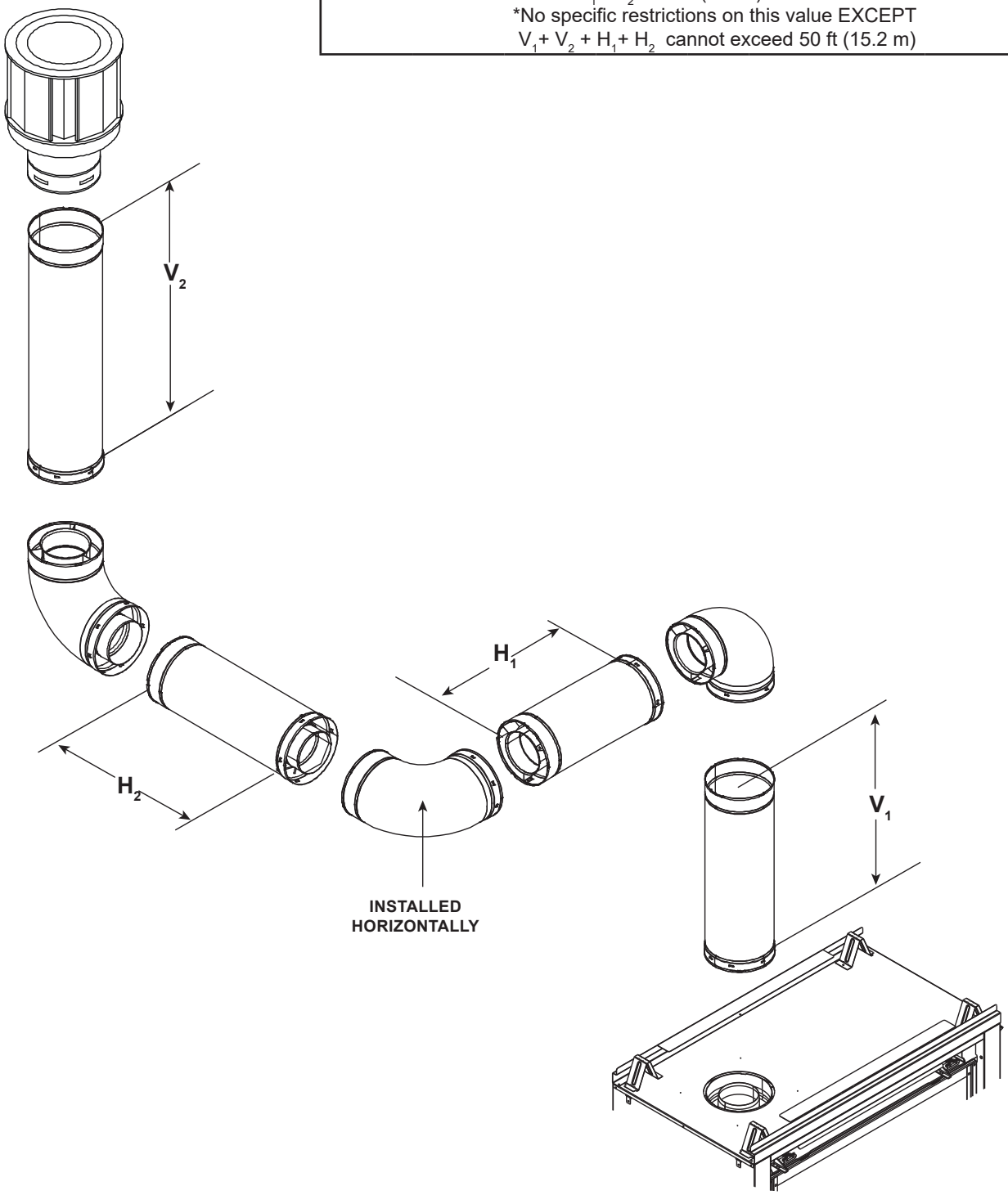

Figure 4.21

Rear Vent - Horizontal Termination

No Elbow

H_1 = 16 in. (406 mm) Maximum

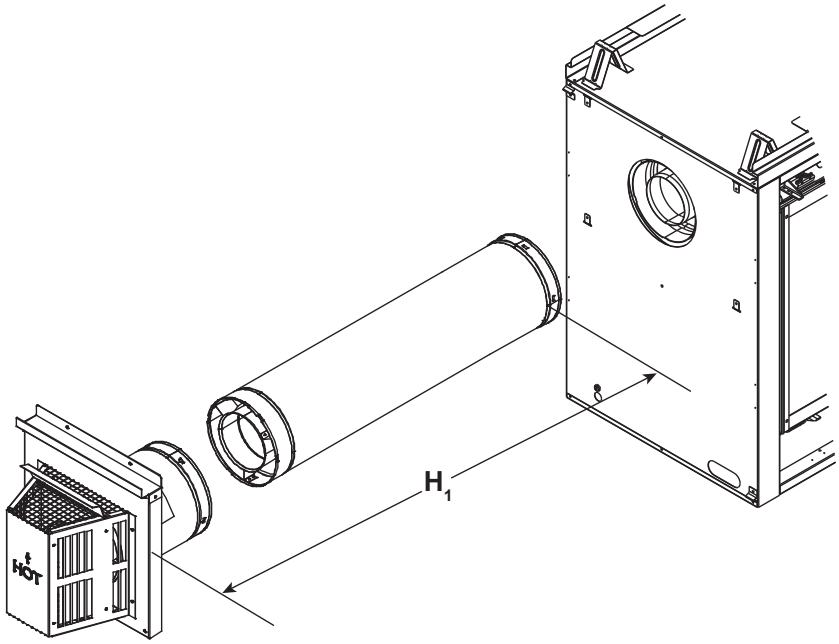

Figure 4.22

One 45º Elbow

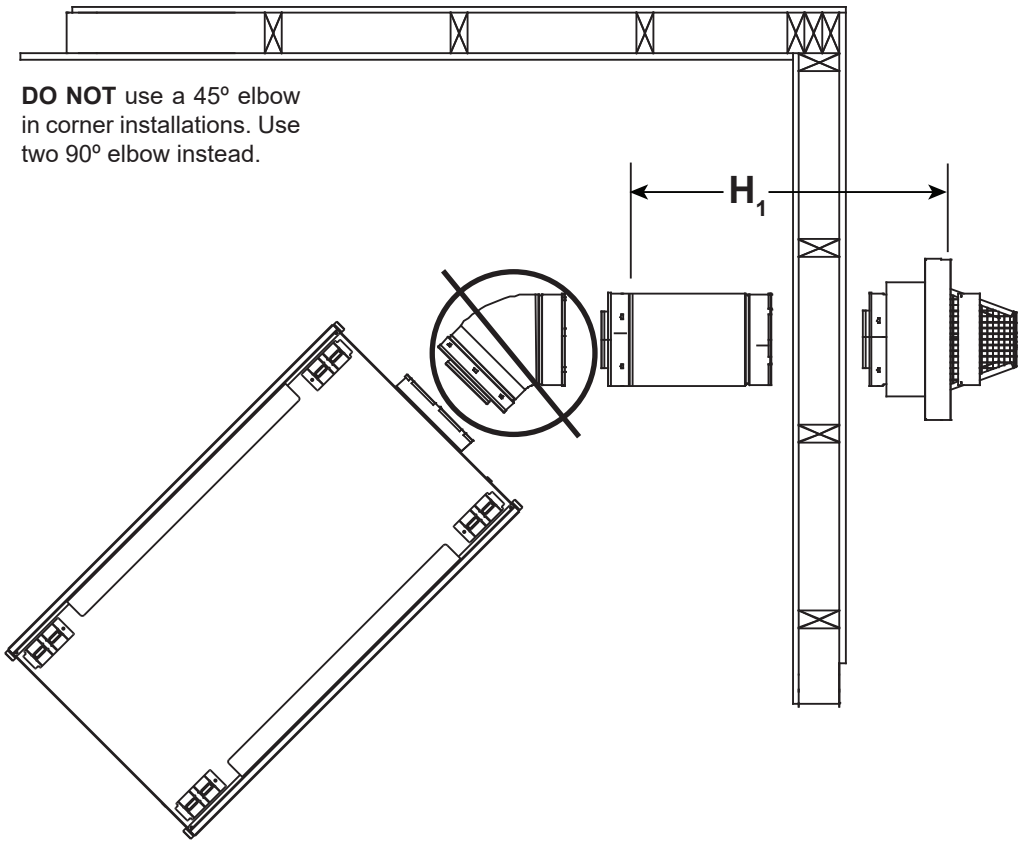

Figure 4.23

Two Elbows

H_1 Maximum		V_1 Minimum		H_2 Maximum		H_1+ H_2 Maximum	
1 ft.	305 mm	6 in.	152 mm	1 ft.	305 mm	1 ft	305 mm
2 ft.	610 mm	1 ft.	305 mm	2 ft.	610 mm	3 ft.	914 mm
3 ft.	914 mm	2 ft.	610 mm	4 ft	1.2 m	6 ft.	1.8 m
3 ft.	914 mm	3 ft.	914 mm	7 ft.	2.1 m	9 ft.	2.7 m
3 ft.	914 mm	4 ft.	1.2 m	10 ft.	3 m	12 ft.	3.7 m
3 ft.	914 mm	5 ft.	1.5 m	12 ft.	3.7 m	15 ft.	4.6 m
3 ft.	914 mm	6 ft.	1.8 m	15 ft.	4.6 m	18 ft.	5.5 m
V_1+ H_1+ H_2= 50 ft (15.2 m) Maximum H_1= 3 ft (914 mm) Maximum *H_1+ H_2= 18 ft (5.5 m) Maximum							

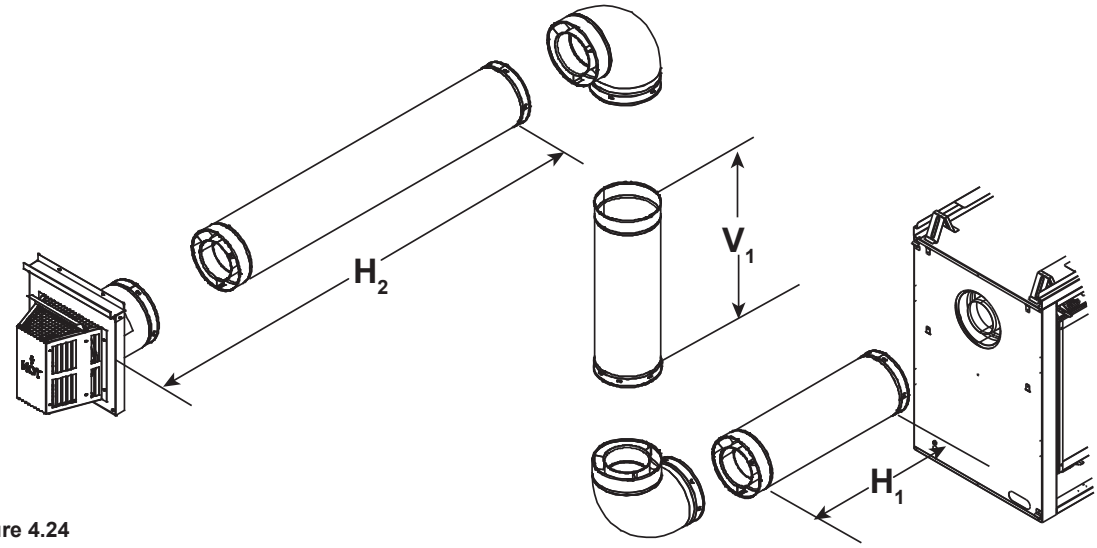

Figure 4.24

Three Elbows

H_1 Maximum		V_1 Minimum		H_1+ H_2+ H_3 Maximum	
6 in.	152 mm	6 in.	152 mm	1 ft.	305 mm
1 ft.	305 mm	1 ft.	305 mm	2 ft.	610 mm
3 ft.	914 mm	2 ft.	610 mm	4 ft.	1.2 m
3 ft.	914 mm	3 ft.	914 mm	6 ft.	1.8 m
3 ft.	914 mm	4 ft.	1.2 m	8 ft.	2.4 m
V_1+ H_1+ H_2+ H_3= 40 ft (12.2 m) Maximum H_1= 3 ft (94 mm) Maximum H_1+ H_2+ H_3= 12 ft (3.7 m) Maximum					

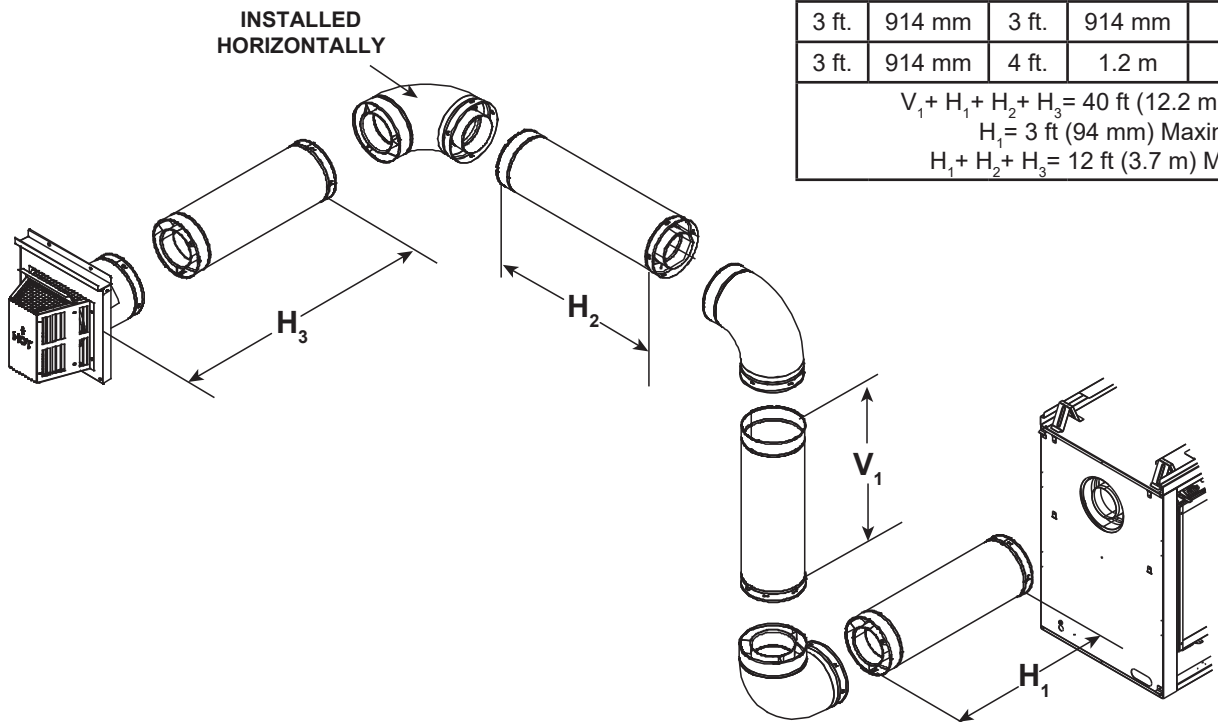

Figure 4.25

Rear Vent - Vertical Termination

One Elbow

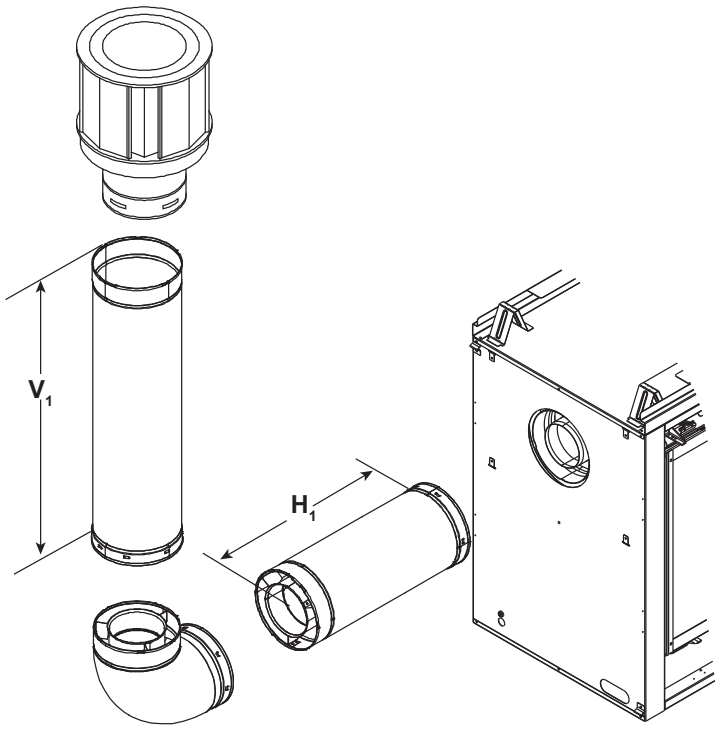

V_1 Minimum		H_1 Maximum	
1 ft.	305 mm	3 ft.	914 mm
2 ft.	610 mm	5 ft.	1.5 m
3 ft.	914 mm	7 ft.	2.1 m
4 ft.	1.2 m	8 ft	2.4 m
5 ft.	1.5 m	8 ft	2.4 m
$V_1 + H_1 =$ 40 ft (12.2 m) Maximum			

Figure 4.26

Two Elbows

V_1 Minimum		$H_1 + H_2$ Maximum	
Back to Back 90° Elbows		3 ft.	914 mm
2 ft	610 mm	6 ft.	1.8 m
4 ft.	1.2 m	9 ft.	2.7 m
5 ft.	1.5 m	10 ft.	3 m
6 ft.	1.8 m	12 ft.	3.7 m
$V_1 + H_1 + H_2 =$ 50 ft (15.2 m) Maximum $H_1 + H_2 =$ 16 ft (4.9 m) Maximum			

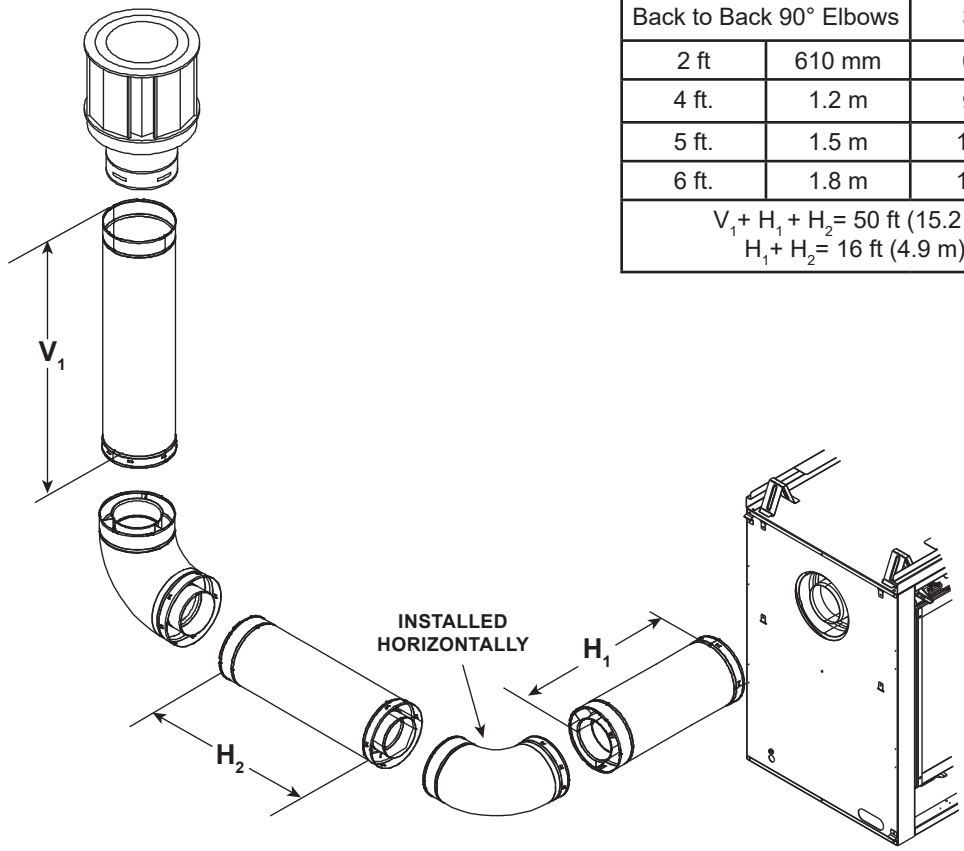

Figure 4.27

Three Elbows

H_1 Maximum		V_1 Minimum		H_2		H_1+ H_2 Maximum	
1 ft.	305 mm	1 ft.	305 mm	1 ft.	305 mm	2 ft.	610 mm
2 ft.	610 mm	2 ft.	610 mm	3 ft.	914 mm	5 ft.	1.5 m
4 ft.	1.2 m	3 ft.	914 mm	4 ft.	1.2 m	8 ft.	4.6 m
5 ft.	1.5 m	4 ft.	1.2 m	6 ft.	1.8 m	11 ft.	3.4 m
6 ft.	1.8 m	5 ft.	1.5 m	8 ft.	2.4 m	14 ft.	4.3 m
8 ft.	2.4 m	6 ft.	1.8 m	9 ft.	2.7 m	17 ft.	5.2 m
H_1 = 8 ft (2.4 m) Max. V_1+ V_2+ H_1+ H_2= 50 ft (15.2 m) Max. H_1+ H_2= 17 ft (5.2 m) Max.							

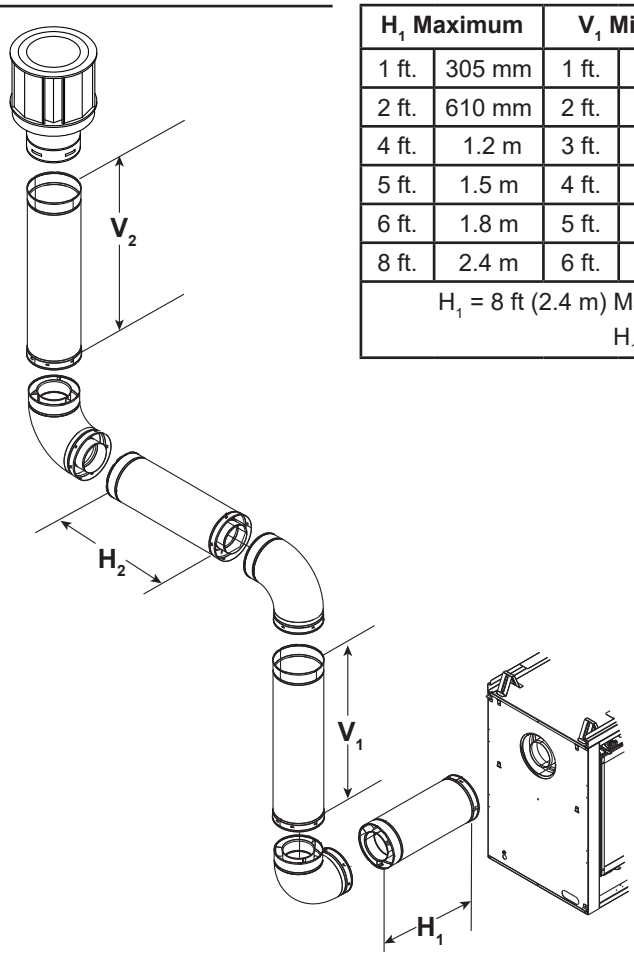

Figure 4.28

Three Elbows

H_1	H_2	H_3	V_1 Minimum		H_1+ H_2+ H_3 Maximum	
*	*	*	8 ft.	2.4 m	4 ft.	1.2 m
*	*	*	9 ft.	2.7 m	5 ft.	1.5 m
*	*	*	10 ft.	3.1 m	6 ft.	1.8 m
*No specific restrictions on this value EXCEPT V_1+ H_1+ H_2+ H_3 cannot exceed 50 ft. (15.2 m) Maximum H_1+ H_2+ H_3 = 6 ft. (1.8 m) Maximum						

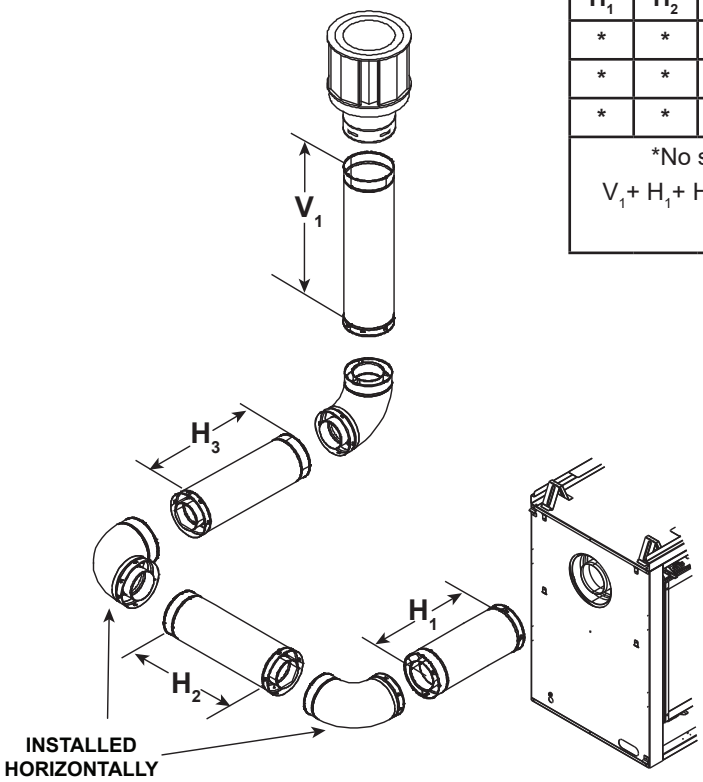

Figure 4.29

5 Vent Clearances and Vent Framing

A. Vent Clearances to Combustibles

WARNING! Risk of Fire! *Maintain air space clearance to vent.* ***DO NOT*** *pack insulation or other combustibles:*

- *Between ceiling firestops*
- *Between wall shield firestops*
- *Around vent system*

Failure to keep insulation or other material away from vent pipe could cause overheating and fire.

Note: Heat shields MUST overlap by a minimum of 1-1/2 in. (38 mm).
- **DVP heat shield** - designed to be used on a wall 4 in. to 7-1/4 in. (102 mm to 184 mm) thick.
- If wall thickness is less than 4 in. the existing heat shields must be field trimmed. If wall thickness is greater than 7-1/4 in. a DVP-HSM-B will be required.
- **SLP heat shield** - designed to be used on a wall 4-3/8 in. to 7-5/8 in. (111 mm to 194 mm thick).
- If wall thickness is less than 4-3/8 the existing heat shields must be field trimmed. If wall thickness is greater than 7-5/8 in. a DVP-HSM-B will be required.

(DVP-SLP Pipe Shown)

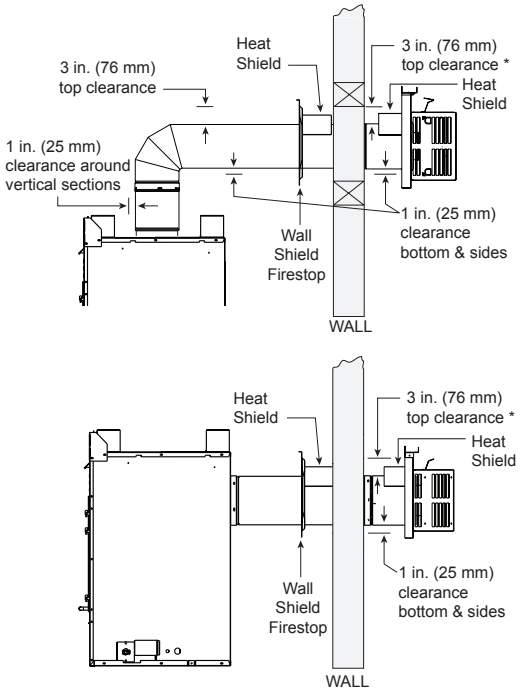

* When using SLP pipe, minimum clearances from the vent pipe to combustible materials at inside wall firestops are:
Top: 2-1/2 in. (64 mm)
Bottom: 1/2 in. (13 mm)
Sides: 1 in. (25 mm)

Figure 5.1 Horizontal Venting Clearances To Combustible Materials

Elbow and Offset Clearances to Combustibles

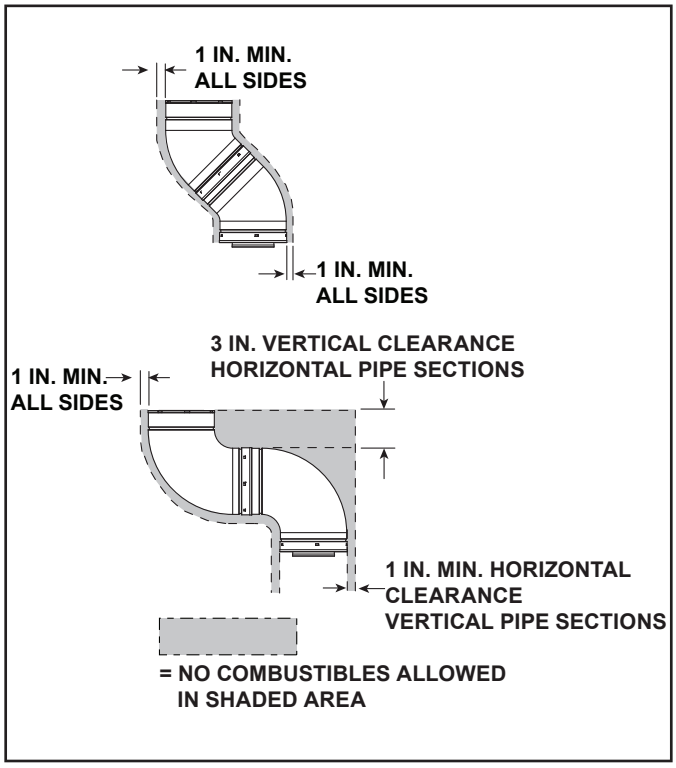

Figure 5.2 Clearances from Vent to Combustible Framing Materials

B. Wall Penetration Framing/Firestops

Combustible Wall Penetration

Whenever a combustible wall is penetrated, you must frame a hole for the wall shield firestop(s). The wall shield firestop maintains minimum clearances and prevents cold air infiltration.

- The opening must be framed on all four sides using the same size framing materials as those used in the wall construction.
- SLP pipe - A wall shield firestop must be placed on each side of an interior wall. A minimum 1-1/2 in. (38 mm) overlap of attached heat shields must be maintained.
- DVP pipe - A wall shield firestop is required on one side only on interior walls. If your local inspector requires a wall shield firestop on both sides, then both wall shield firestops must have a heat shield (refer to Section 12.A.) attached to them.
- See Section 7.F. for information for regarding the installation of a horizontal termination cap.

Non-Combustible Wall Penetration

If the hole being penetrated is surrounded by non-combustible materials such as concrete, a hole with diameter one inch greater than the pipe is acceptable.

Whenever a non-combustible wall is penetrated, the wall shield firestop is only required on one side and no heat shield is necessary.

DO NOT PACK VENT FRAMING HOLE WITH INSULATION OR OTHER MATERIAL.

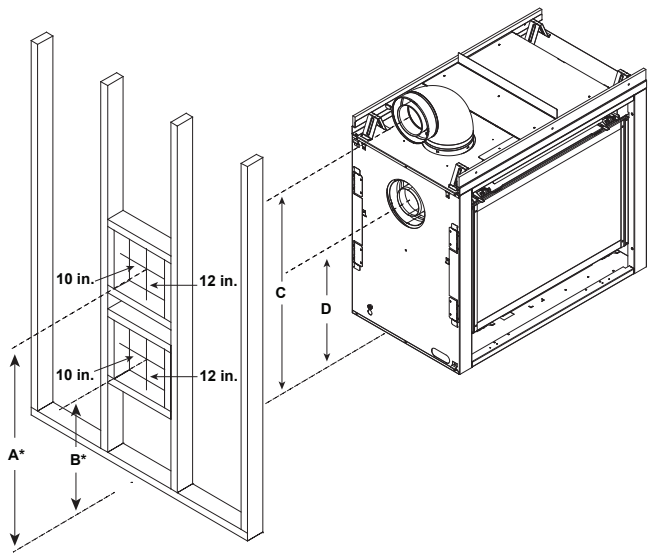

A*	B*	C	D
43-3/4 in.	28 in.	42-3/4 in.	27 in.

* Shows center of vent framing hole for top or rear venting. The center of the hole is one (1) inch (25.4 mm) above the center of the horizontal vent pipe.

Note: Center of the horizontal vent pipe to the vertical measuring surface of a trap cap is 5 inches (127 mm).

Figure 5.3 Wall Penetration

C. Ceiling Firestop/Floor Penetration Framing

WARNING! Risk of Fire! DO NOT pack insulation around the vent. Maintain clearances to vent to prevent overheating.

A ceiling firestop **MUST** be used between floors and attics.

- **DVP pipe only** - Frame an opening 10 in. by 10 in. (254 mm by 254 mm) whenever the vent penetrates a ceiling/floor (see Figure 5.4).
- **SLP pipe only** - Frame opening 9 in. x 9 in. (229 mm x 229 mm) whenever the vent penetrates a ceiling/floor (see Figure 5.4).
- Frame the area with the same sized lumber as used in ceiling/floor joist.
- The ceiling firestop may be installed above or below the ceiling joists when installed with an attic insulation shield. It must be under joists between floors that are not insulated. Refer to Figure 5.5.
- Secure in place with nails or screws.

D. Install Attic Insulation Shield

WARNING! Fire Risk. *The use of an attic shield is required to prevent loose materials or insulation from contacting the vent causing overheating and a fire.*

The International Fuel Gas Code requires an attic shield constructed of 26 gauge minimum steel that extends at least 2 in. (51 mm) above insulation.

- Attic insulation shields must meet specified clearances to combustible materials and be secured in place.
- An attic insulation shield kit is available from Hearth & Home Technologies. Contact your dealer to order. Install attic insulation shield according to instructions included with kit.

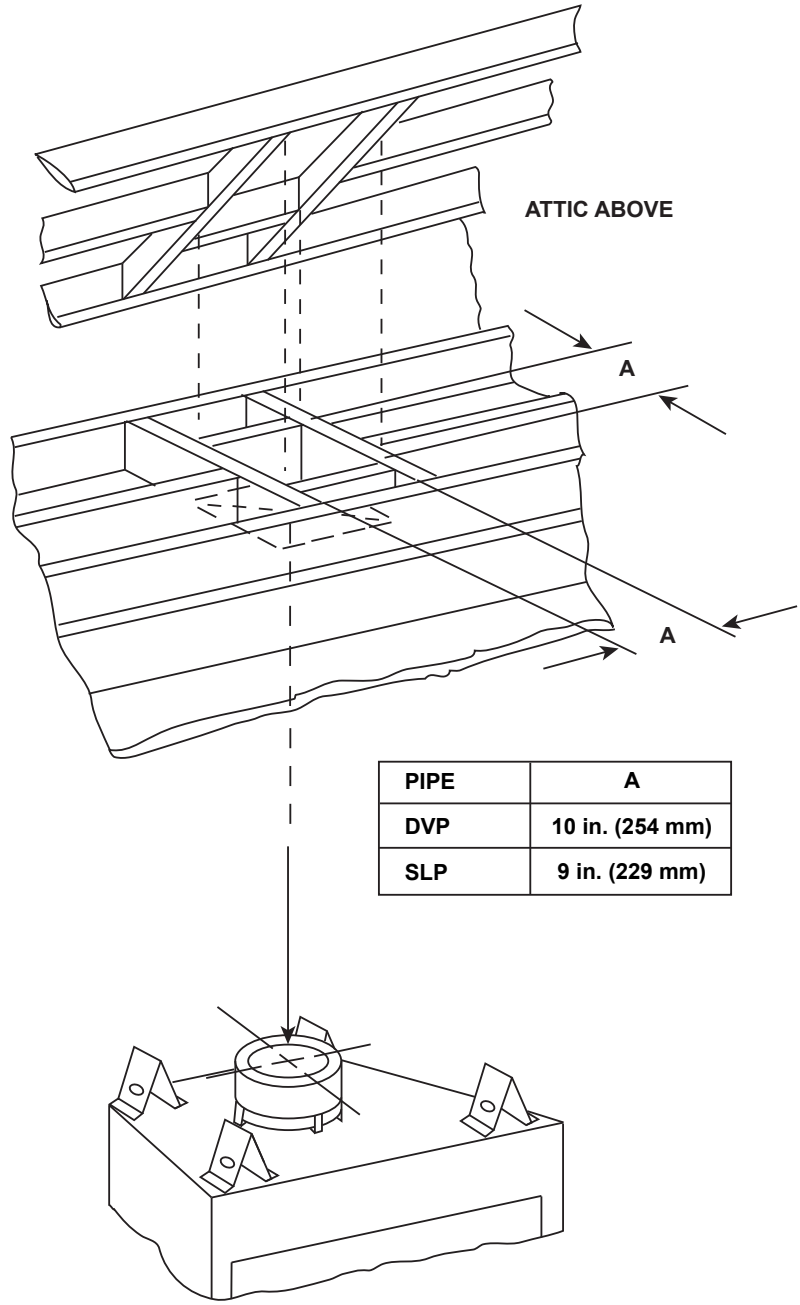

PIPE	A
DVP	10 in. (254 mm)
SLP	9 in. (229 mm)

Figure 5.4 Installing Ceiling Firestop

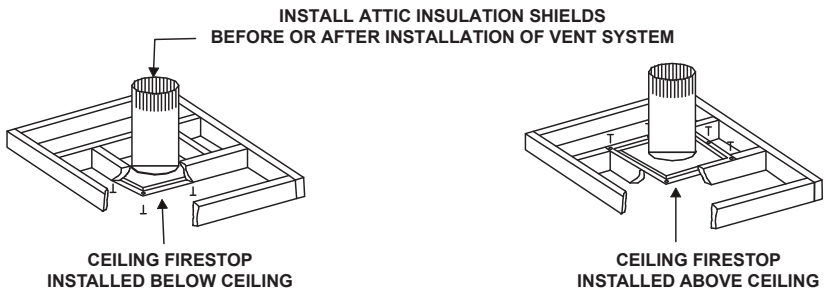

Figure 5.5 Installing the Attic Shield

6 Appliance Preparation

A. Vent Collar Preparation

CAUTION! Risk of Cuts, Abrasions or Flying Debris. *Wear protective gloves and safety glasses during installation. Sheet metal edges are sharp.*

NOTICE: *Once appliance is set up for top or rear venting, it CANNOT be changed at a later time.*

Top Vent

Figure 6.1 ST-DV36IN Only: Remove screws from top heat shield.

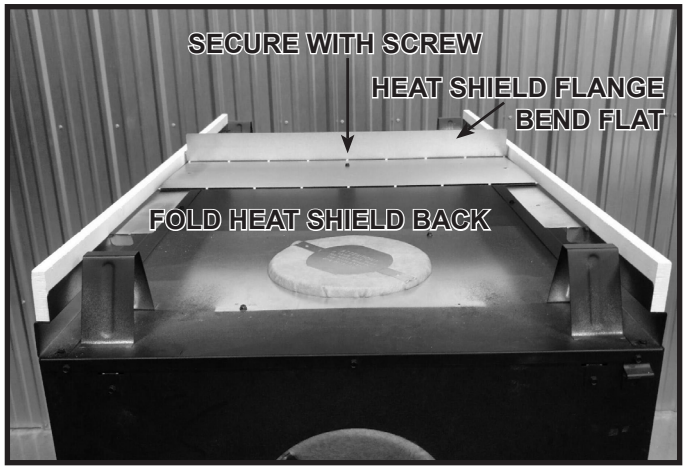

Figure 6.2 ST-DV36IN Only: Fold heat shield back and secure with screw. Bend heat shield flange to make it flat. This step is necessary to allow for framing header clearance.

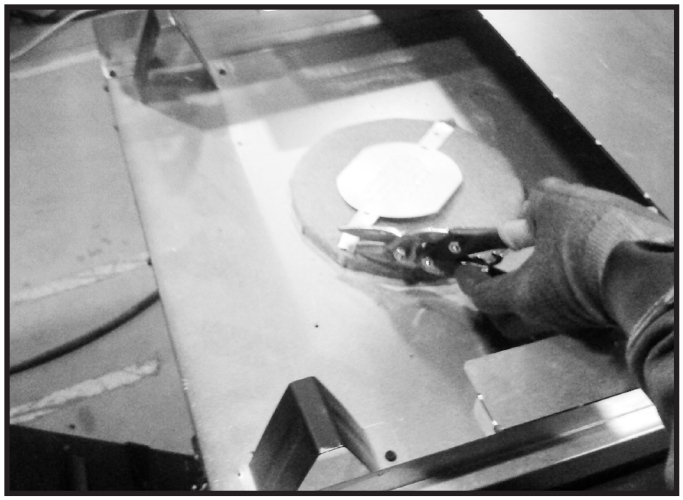

Figure 6.3 Cut the metal retaining band and fold the sides out.

Figure 6.4 Fold the center parts of the retaining band up and use to remove the vent cap.

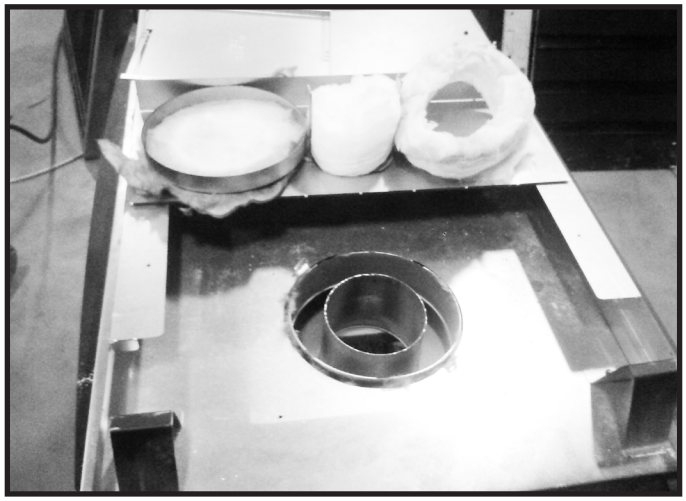

Figure 6.5 Remove and discard the seal cap, insulation donut, insulation plug, and the insulation basket. Attach the first vent section (it will snap into place). Slide the vent gasket onto the vent section and then, up against the appliance. Secure the vent gasket to the appliance with two self-tapping screws found in the manual bag. Note: The vent gasket can found in the manual bag.

Proceed to Section 6.B.

Rear Vent

NOTICE: *Once appliance is set up for top or rear venting, it CANNOT be changed at a later time.*

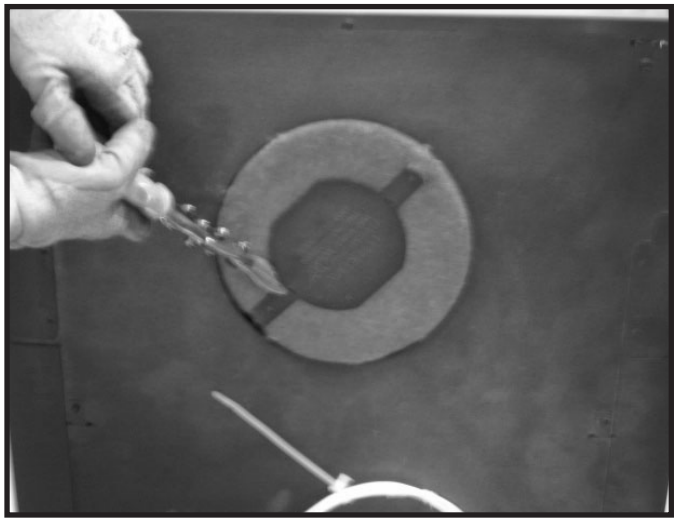

Figure 6.6 Cut the metal retaining band.

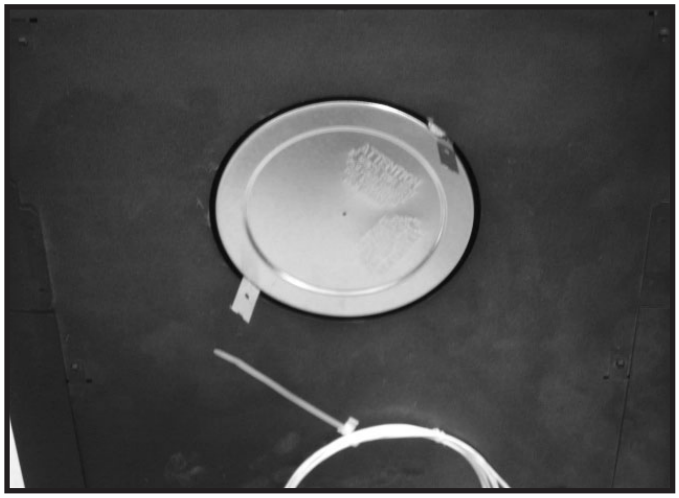

Figure 6.7 Remove the seal cap.

NOTICE: *Once the vent cap has been removed it CANNOT be reattached.*

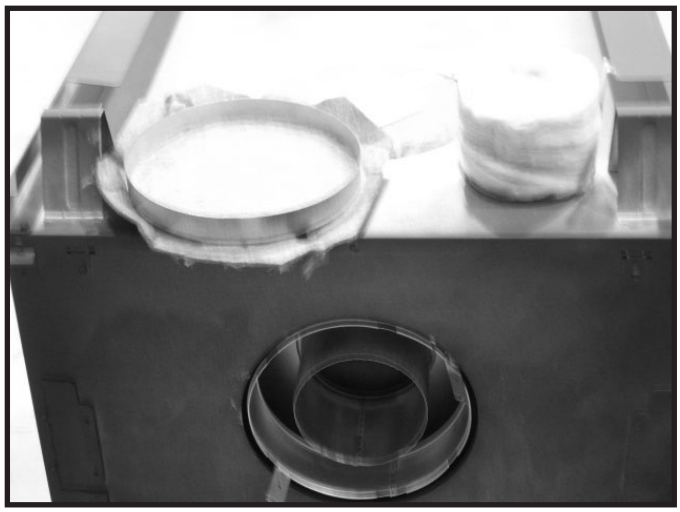

Figure 6.8 Discard the seal cap, insulation plug and the insulation basket.

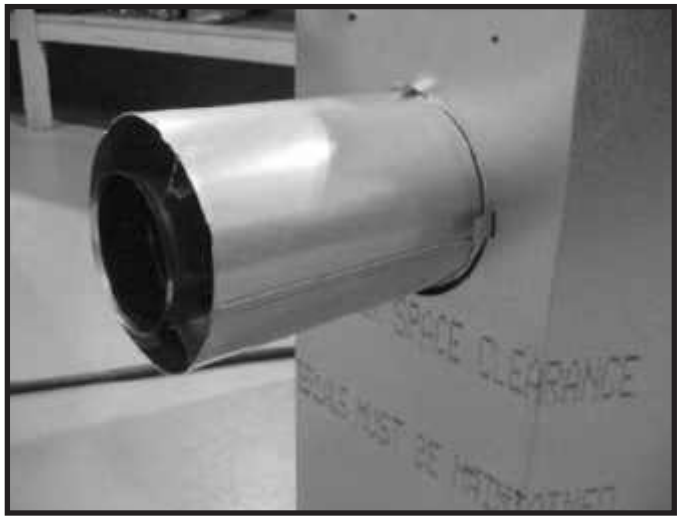

Figure 6.9 Attach the first vent section (it will snap into place). Slide the vent gasket onto the vent section and then, up against the appliance. Secure the vent gasket to the appliance with two self-tapping screws found in the manual bag. Note: The vent gasket can found in the manual bag.

B. Securing and Leveling the Appliance

⚠ WARNING

Risk of Fire!

Prevent contact with:

- *Sagging or loose insulation*
- *Insulation backing or plastic*
- *Framing and other combustible materials*

DO NOT remove standoffs or *notch the framing around the appliance standoffs.*

Failure to maintain air space clearance could cause overheating and fire.

Block openings into the chase to prevent entry of blown-in insulation. Make sure insulation and other materials are secured.

NOTICE: *Failure to ensure that the fireplace opening is square could result in the decorative front not fitting properly.*

The diagrams show how to properly position and secure the appliance. See Figure 6.10. Nailing tabs are provided to secure the appliance to the framing members. See Figure 6.11.

- Bend out nailing tabs on each side.
- Place the appliance into position.
- Keep nailing tabs flush with the framing.
- Level the appliance from side to side and front to back.
- "Square" the unit by securing diagonal dimensions to within 1/4 inch of each other. See Figure 6.12.
- Shim the appliance as necessary. It is acceptable to use wood shims underneath the appliance.
- Secure the appliance to the framing by using nails or screws through the nailing tabs. Use a minimum of one fastener per nailing tab.
- Optional: Secure the appliance to the floor by inserting two screws through the pilot holes at the bottom of the appliance.

NOTICE: *Failure to ensure that the fireplace opening is square could result in the decorative front not fitting properly.*

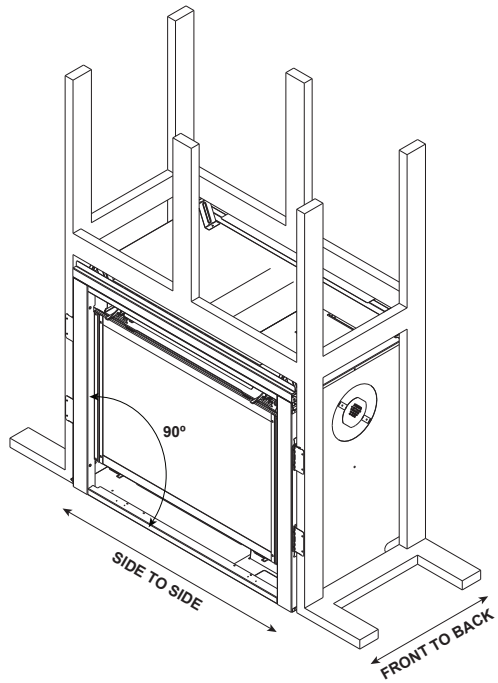

Figure 6.10 Proper Positioning and Leveling of an Appliance

NOTICE: *Failure to ensure that the fireplace opening is square may result in the decorative front not fitting properly.*

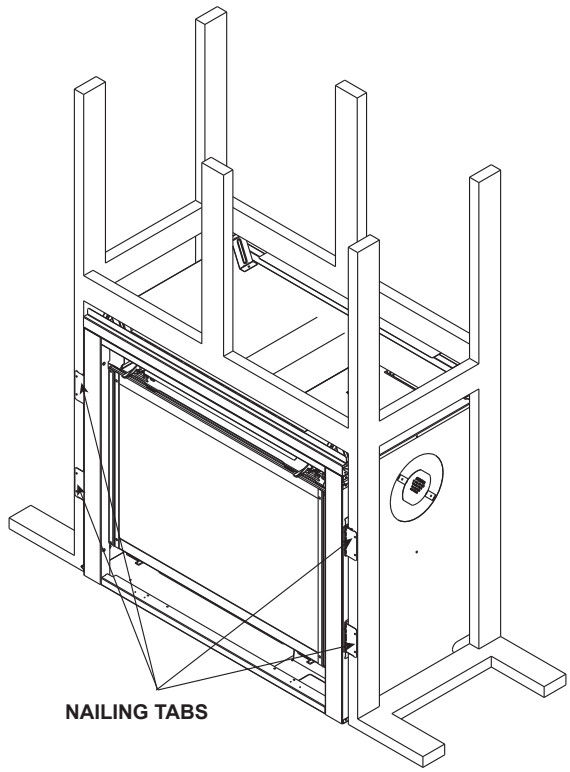

Figure 6.11 Securing An Appliance

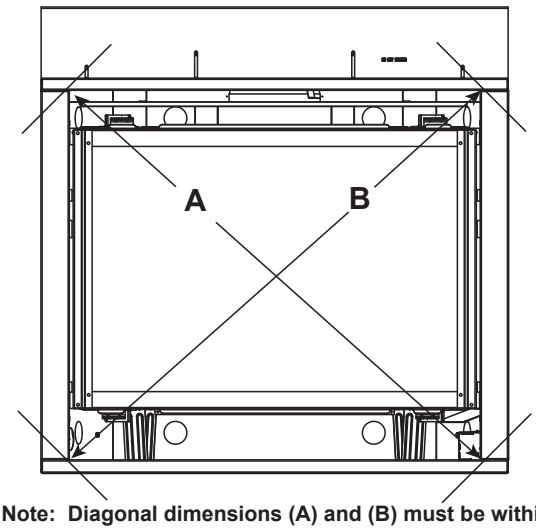

Note: Diagonal dimensions (A) and (B) must be within 1/4 inch of each other.

Figure 6.12 Positioning the Appliance Squarely

C. Non-Combustible Material (Factory-Installed)

WARNING! Risk of Fire! *DO NOT remove factory-installed non-combustible material.*

The factory-installed non-combustible board spans the distance from the top of the fireplace to the framing header. This board must be used. Do not remove. See Figure 6.13.

Figure 6.13 Non-combustible Board

7 Venting

A. Assemble Vent Sections (DVP Pipe Only)

WARNING! Risk of Fire or Explosion! *Vent sections MUST be installed correctly. Improperly installed vent sections could leak or cause appliance to overheat.*

Attach Vent to the Firebox Assembly

Note: The end of the pipe sections with the lanced tabs will face toward the appliance.

Attach the first pipe section to the starting collar:

- Lanced pipe end of the starting collar.
- Inner pipe over inner collar.
- Push the pipe section until all lanced tabs snap in place.
- Lightly tug on pipe to confirm it has locked.

Required: Commercial, Multi-family (Multi-level exceeding two stories), or High-Rise Applications

Recommended: Vent Configurations with multiple pipe joints/pipe connections

WARNING! Risk of Fire or Explosion! DO NOT *break silicone seals on slip sections. Use care when removing termination cap from slip pipe. If slip section seals are broken during removal of the termination cap, vent could leak.*

All outer pipe joints must be sealed using one of the methods below, including the slip section that connects directly to the horizontal termination cap.

- Apply a bead of silicone sealant (300 ºF minimum continuous exposure rating) inside the female outer pipe joint prior to joining sections. See Figure 7.1 **OR**
- Apply a bead of silicone sealant (300 ºF minimum continuous exposure rating) to the outside of connecting joint after joining sections **OR**

  Apply aluminum foil tape (300 ºF minimum continuous exposure rating) to the outside of connecting joint after joining sections. On horizontal pipe runs, it is recommended that the tape seam is positioned on the bottom side of the vent pipe.
- Only outer pipes need to be sealed. All unit collar, pipe, slip section, elbow and cap outer flues shall be sealed in this manner, unless otherwise stated.

Assemble Pipe Sections

Per Figure 7.2:

- Start the inner pipe on the lanced end of section A into the flared end of section B.
- Start the outer pipe of section A over the outer pipe of section B.
- Once both vents sections are started, push firmly until all lanced tabs lock into place.
- Lightly tug on the pipe to confirm the tabs have locked.

It is acceptable to use screws no longer than 1/2 in. (13 mm) to hold outer pipe sections together. If predrilling holes, **DO NOT** penetrate inner pipe.

For 90º and 45º elbows that are changing the vent direction from horizontal to vertical, one screw minimum should be put in the outer flue at the horizontal elbow joint to prevent the elbow from rotating. Use screws no longer than 1/2 in. (13 mm). If predrilling screw holes, **DO NOT** penetrate inner pipe.

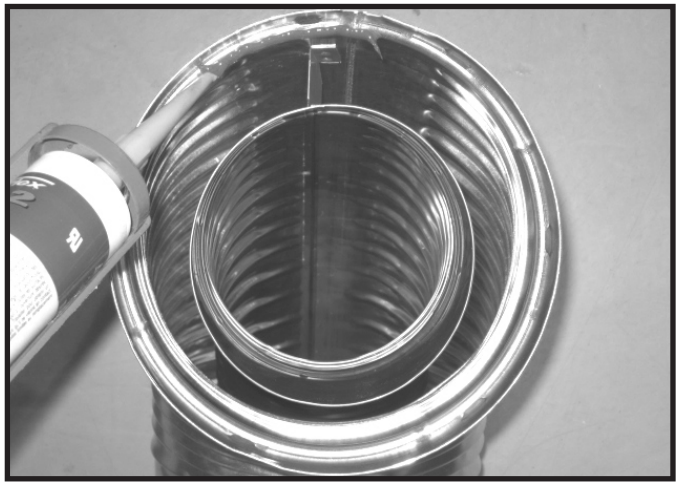

Figure 7.1 High Temperature Silicone Sealant

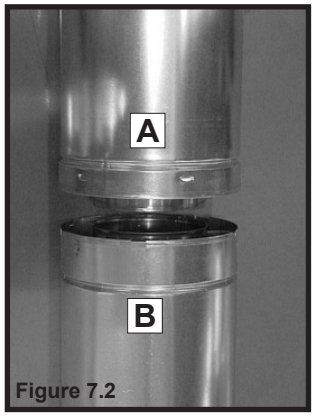

Figure 7.2

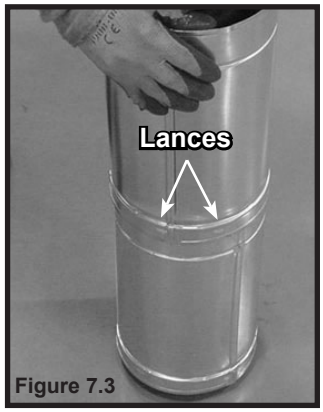

Figure 7.3

Note: Make sure that the seams are not aligned to prevent unintentional disconnection.

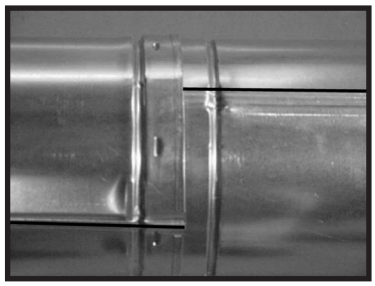

CORRECT

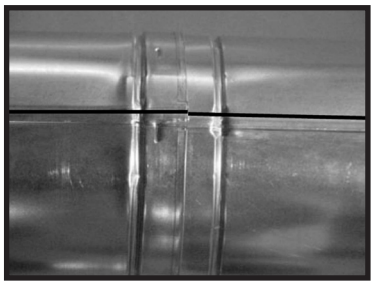

INCORRECT

Figure 7.4 Seams

NOTICE: *When installing a vent system with an HRC termination cap, all pipe system joints shall be sealed using a high temperature silicone sealant (300 ºF minimum continuous exposure rating).*

- *Apply a bead of silicone sealant (300 ºF minimum continuous exposure rating) inside the female outer pipe joint prior to joining sections.*
- *Only outer pipes are sealed, sealing the inner flue is not required.*
- *All unit collar, pipe, slip section, elbow and cap outer flues shall be sealed.*

B. Assemble Vent Sections (SLP Only)

WARNING! Risk of Fire or Explosion! *Vent sections MUST be installed correctly. Improperly installed vent sections could leak or cause appliance to overheat.*

To attach the first vent component to the starting collars of the appliance:

- Attach a DVP-SLP24 or DVP-2SL adapter to the starting collar of the appliance.
- Lock the vent components into place by sliding the pipe section onto the collar.
- Align the seam of the pipe and seam of collar to allow engagement. Rotate the vent component to lock into place. Use this procedure for all vent components. See Figure 7.5.
- Slide the gasket over the first vent section and place it flush to the appliance. This will prevent cold air infiltration. Caulk with a minimum of 300 ºF continuous exposure rating may be used to hold the part in place.
- Continue adding vent components, locking each succeeding component into place.
- Ensure that each succeeding vent component is securely fitted and locked into the preceding component.

It is acceptable to use screws no longer than 1/2 in. (13 mm) to hold outer pipe sections together. If predrilling holes, **DO NOT** penetrate inner pipe.

Required: Commercial, Multi-family (Multi-level exceeding two stories), or High-Rise Applications

Recommended: Vent Configurations with multiple pipe joints/pipe connections

WARNING! Risk of Fire or Explosion! DO NOT *break silicone seals on slip sections. Use care when removing termination cap from slip pipe. If slip section seals are broken during removal of the termination cap, vent could leak.*

All outer pipe joints must be sealed using one of the methods below, including the slip section that connects directly to the horizontal termination cap.

- Apply a bead of silicone sealant (300 ºF minimum continuous exposure rating) inside the female outer pipe joint prior to joining sections. See Figure 7.1 **OR**
- Apply a bead of silicone sealant (300 ºF minimum continuous exposure rating) to the outside of connecting joint after joining sections **OR**

  Apply aluminum foil tape (300 ºF minimum continuous exposure rating) to the outside of connecting joint after joining sections. On horizontal pipe runs, it is recommended that the tape seam is positioned on the bottom side of the vent pipe.
- Only outer pipes need to be sealed. All unit collar, pipe, slip section, elbow and cap outer flues shall be sealed in this manner, unless otherwise stated.

WARNING! Risk of Fire or Explosion! DO NOT *break silicone seals on slip sections. Use care when removing termination cap from slip pipe. If slip section seals are broken during removal of the termination cap, vent could leak.*

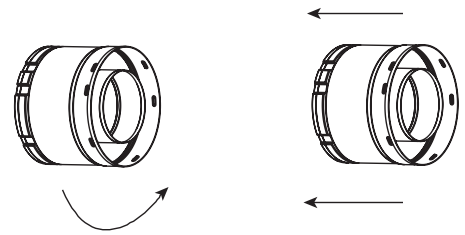

Note: Align seams to engage pipe, then rotate counterclockwise to lock

Figure 7.5 Adding Venting Components

NOTICE: *When installing a vent system with an HRC termination cap, all pipe system joints shall be sealed using a high temperature silicone sealant (300 ºF minimum continuous exposure rating).*

- *Apply a bead of silicone sealant (300 ºF minimum continuous exposure rating) inside the female outer pipe joint prior to joining sections.*
- *Only outer pipes are sealed, sealing the inner flue is not required.*
- *All unit collar, pipe, slip section, elbow and cap outer flues shall be sealed.*

C. Assemble Slip Sections

- Slide the inner flue of the slip section into the inner flue of the pipe section and the outer flue of the slip section over the outer flue of the pipe section. See Figure 7.6.
- Slide together to the desired length.

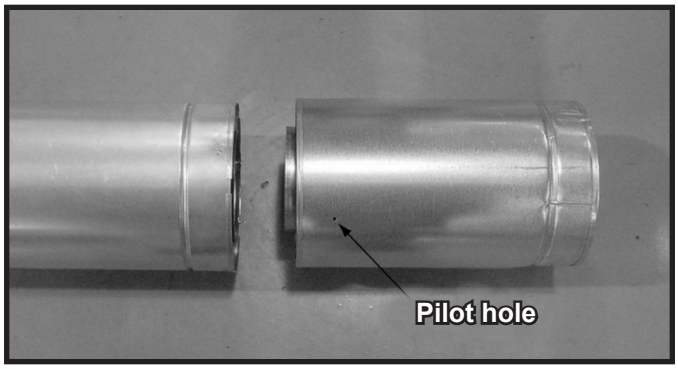

Figure 7.6 Slip Section Pilot Holes

- Maintain a 1-1/2 in. (38 mm) overlap between the slip section and the pipe section.
- Secure the pipe and slip section with two screws no longer than 1/2 in. (13 mm), using the pilot holes in the slip section. See Figure 7.7.

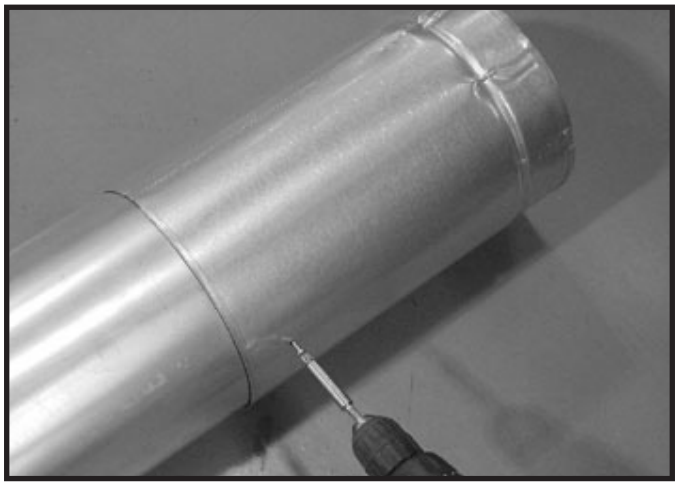

Figure 7.7 Screws into Slip Section

- Continue adding pipe as necessary following instructions in “Assembling Pipe Sections.”

NOTICE: *If slip section is too long, the inner and outer flues of the slip section can be cut to the desired length.*

D. Secure the Vent Sections

WARNING! Risk of Fire, Explosion or Asphyxiation! *Improper support could allow vent to sag and separate. Use vent run supports and connect vent sections per installation instructions.* ***DO NOT*** *allow vent to sag below connection point to appliance.*

- Vertical runs originating off the top of the appliance, with no offsets, must be supported every 8 feet (2.44 m) after the maximum allowed 25 feet (7.62 m) of unsupported rise.
- Vertical runs originating off the rear of the appliance, or after any elbow, must be supported every 8 feet (2.44 m).
- Horizontal runs must be supported every 5 feet (1.52 m).
- Vent supports or plumbers strap (spaced 120º apart) may be used to support vent sections. See Figures 7.8 and 7.9.

  Note: Figures 7.8 and 7.9 are to be used for reference only. Method of strap installation could vary by configuration of vent system.
- Wall shield firestops may be used to provide horizontal support to vent sections.
- SLP ceiling firestops have tabs that may be used to provide vertical support.

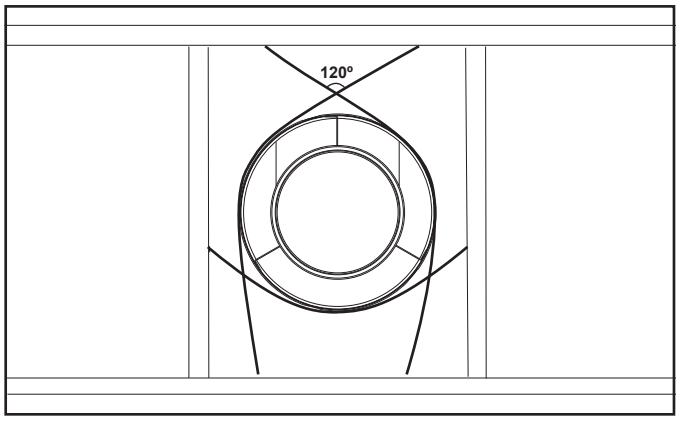

Figure 7.8 Securing Vertical Pipe Sections

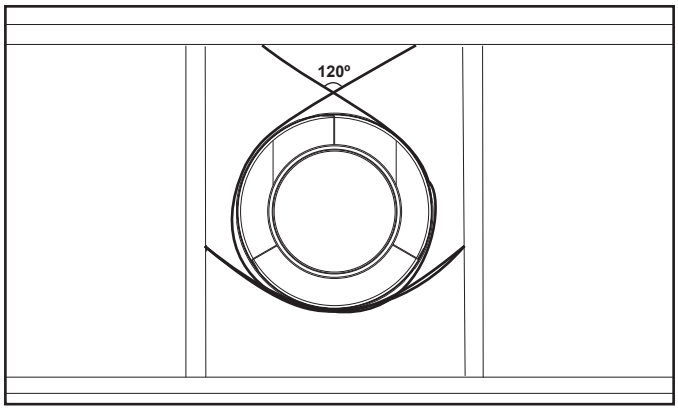

Figure 7.9 Securing Horizontal Pipe Sections

E. Disassemble Vent Sections

- Rotate either section (see Figure 7.10) so the seams on both pipe sections are aligned as shown in Figure 7.11.
- Pull carefully to separate the pieces of pipe.

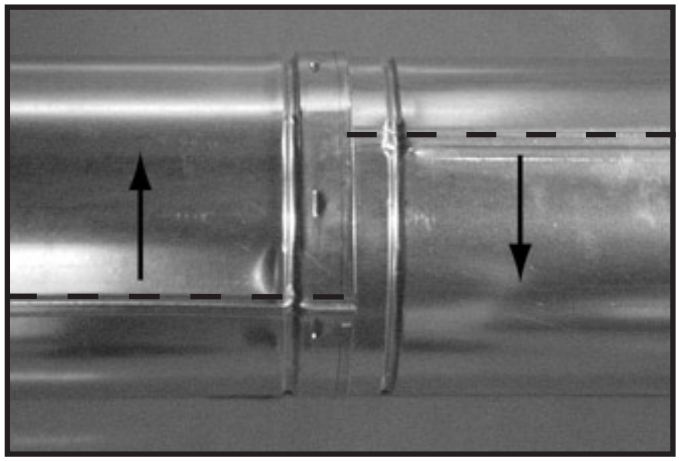

Figure 7.10 Rotate Seams for Disassembly

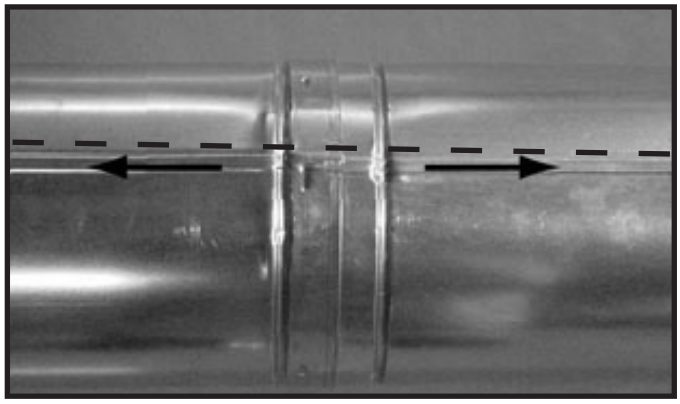

Figure 7.11 Align and Disassemble Vent Sections

F. Vertical Termination Requirements

Install and Seal Metal Roof Flashing

- See minimum vent heights for various pitched roofs (Section 4, Figure 4.1) to determine the length of pipe to extend through the roof.
- Slide the roof flashing over the pipe sections extending through the roof as shown in Figure 7.12.
- Use an elastomeric or silicone sealant with a minimum of 150 ºF temperature rating to seal the metal roof flashing.

Note: When installing a silicone or EPDM pipe flashing boot on a metal roof, it is recommended to put a bead of 100% silicone sealant where the boot contacts the vent pipe to prevent the entry of water. Follow the manufacturer's recommendations when installing the boot. Climate regions with frequent temperatures below - 50 °F (-45.6 °C) should use a silicone flashing boot.

NOTICE: *Failure to properly seal the roof flashing and pipe seams could permit entry of water.*

- Seal the gap between the roof flashing and the outside diameter of the pipe.
- Seal the perimeter of the flashing where it contacts the roof surface. See Figure 7.12.
- Seal the exposed pipe section seams that are located above the roof.

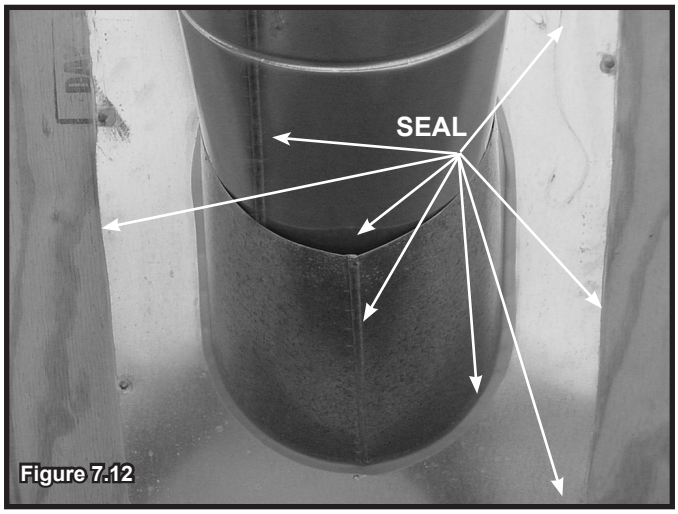

Figure 7.12

Assemble and Install Storm Collar

CAUTION! Risk of Cuts, Abrasions or Flying Debris. *Wear protective gloves and safety glasses during installation. Sheet metal edges are sharp.*

- Slide the storm collar onto the exposed pipe section and align brackets.
- Insert a bolt (provided) through the brackets and install nut. Do not completely tighten. See Figure 7.13.

Figure 7.13 Insert Bolt into Brackets

- Slide the assembled storm collar down the pipe section until it rests on the roof flashing. See Figure 7.14.
- Tighten nut and make sure the collar is tight against the pipe section.
- Seal around the top of the storm collar. See Figure 7.14.

Install Vertical Termination Cap

- Attach the vertical termination cap by sliding the inner collar of the cap into the inner flue of the pipe section while placing the outer collar of the cap over the outer flue of the pipe section.
- Secure the cap by driving three self-tapping screws (supplied) through the pilot holes in the outer collar of the cap into the outer flue of the pipe. See Figure 7.14.

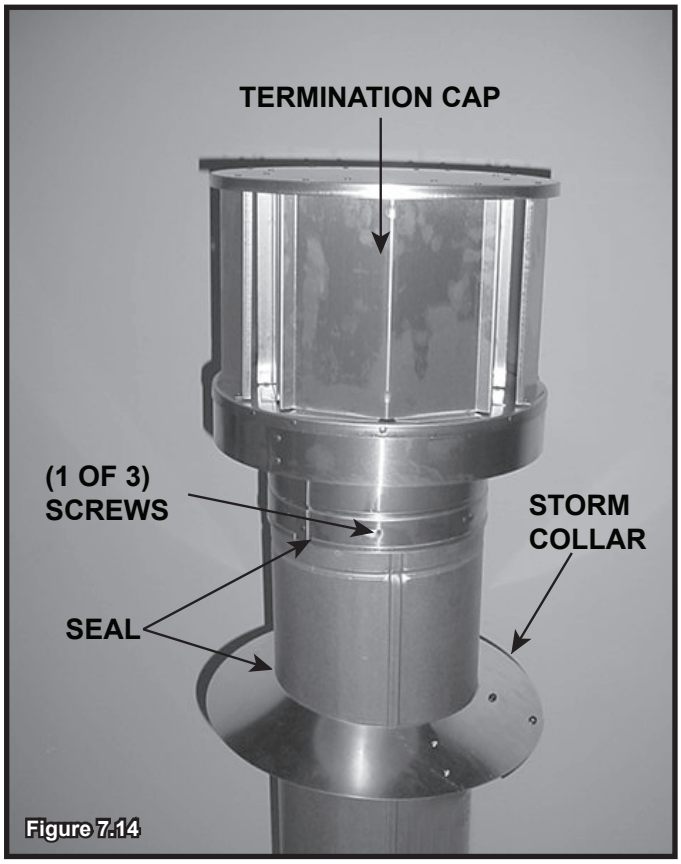

Figure 7.14

G. Horizontal Termination Requirements

Heat Shield Requirements for Horizontal Termination

WARNING! Risk of Fire! *To prevent overheating and fire, heat shields must extend through the entire wall thickness.*

- ***DO NOT*** *remove the heat shields attached to the wall shield firestop and the horizontal termination cap (shown in Figure 7.15).*
- *Heat shields must overlap 1-1/2 in. (38 mm) minimum.*

There are two sections of the heat shield. One section is factory-attached to the wall shield firestop. The other section is factory-attached to the cap. See Figure 7.15.

If the wall thickness does not allow the required 1-1/2 in. (38 mm) heat shield overlap when installed, an extended heat shield must be used.

- If the wall thickness is less than 4 in./102 mm (DVP) or 4-3/8 in./ 111 mm (SLP), the heat shields on the cap and wall shield firestop must be trimmed. A minimum 1-1/2 in. (38 mm) overlap MUST be maintained.
- Use an extended heat shield if the finished wall thickness is greater than 7-1/4 in. (184 mm).
- The extended heat shield may need to be cut to length maintaining sufficient length for a 1-1/2 in. (38 mm) overlap between heat shields.
- Attach the extended heat shield to either of the existing heat shields using the screws supplied with the extended heat shield. Refer to vent components diagrams in the back of this manual.
- Rest the small leg on the extended heat shield on top of the pipe section to properly space it from the pipe section.

Important Notice: Heat shields may not be field constructed.

Install Horizontal Termination Cap (DVP and SLP Pipe)

WARNING! Risk of Fire! *The telescoping flue section of the termination cap MUST be used when connecting vent.*

- *1-1/2 (38 mm) minimum overlap of flue telescoping section is required.*

Failure to maintain overlap could cause overheating and fire.

- Vent termination must not be recessed in the wall. Siding may be brought to the edge of the cap base.
- Flash and seal as appropriate for siding material at outside edges of cap.
- When installing a horizontal termination cap, follow the cap location guidelines as prescribed by current **ANSI Z223.1** and **CAN/CGA-B149** installation codes and refer to Section 4 of this manual.

CAUTION! Risk of Burns! *Local codes may require installation of a cap shield to prevent anything or anyone from touching the hot cap.*

NOTICE: *For certain exposures which require superior resistance to wind-driven rain penetration, a flashing kit and HRC caps are available. When penetrating a brick wall, a brick extension kit is available for framing the brick.*

Note: When using termination caps with factory-supplied heat shield attached, no additional wall shield firestop is required on the exterior side of a combustible wall.

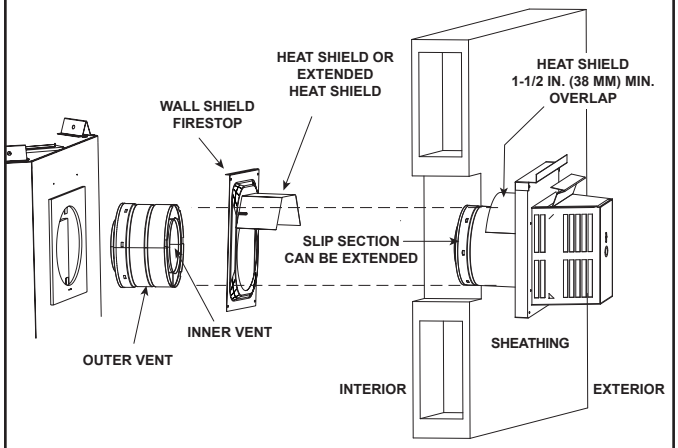

Figure 7.15 Venting Through the Wall

8 Electrical Information

A. General Information

***WARNING! Risk of Shock! DO NOT** wire 110-120 VAC to the ignition module or to the appliance wall switch. (IPI)*

Incorrect wiring will damage controls.

***NOTICE:** This appliance must be electrically wired and grounded in accordance with local codes or, in the absence of local codes, with* **National Electric Code ANSI/NFPA 70-latest edition** *or the* **Canadian Electric Code CSA C22.1.**

- Wire the appliance circuit using a minimum 14-2 AWG with ground to unswitched 110-120 VAC. This is required proper operation of the appliance (IntelliFire® ignition).
- A 110-120 VAC circuit for this product must be protected with ground-fault circuit interrupter protection, in compliance with the applicable electrical codes, when it is installed in locations such as in bathrooms or near sinks.
- Low voltage and 110-120 VAC voltage cannot be shared within the same wall box.
- In some instances, the spark ignition of the fireplace may cause intermittent, non-damaging, interference during the lighting sequence with a TV plugged into the same circuit. It is recommended that the fireplace and TV use different circuits to mitigate the interference potential. If interference is occurring on the same circuit, the use of surge protectors may help alleviate the interference.

Junction Box Installation

The junction box must be wired from the **INSIDE** of the appliance:

- Determine which side of the appliance the junction box is located on.
- Pull the electrical wires from outside the appliance through the knockout making sure to use a Romex connector to fasten the electrical wires to the unit.
- Pull enough wire into the valve compartment to easily reach the junction box location.
- Remove the screw attaching the junction box to the junction box bracket and set it aside.
- Route the wire through the knockout in the junction box bracket.
- Wire the junction box and reattach it to the bracket by inserting the tab in the slot and attaching with screw previously removed. Ensure that a Romex connector is used to attach the electrical wires to the junction box.

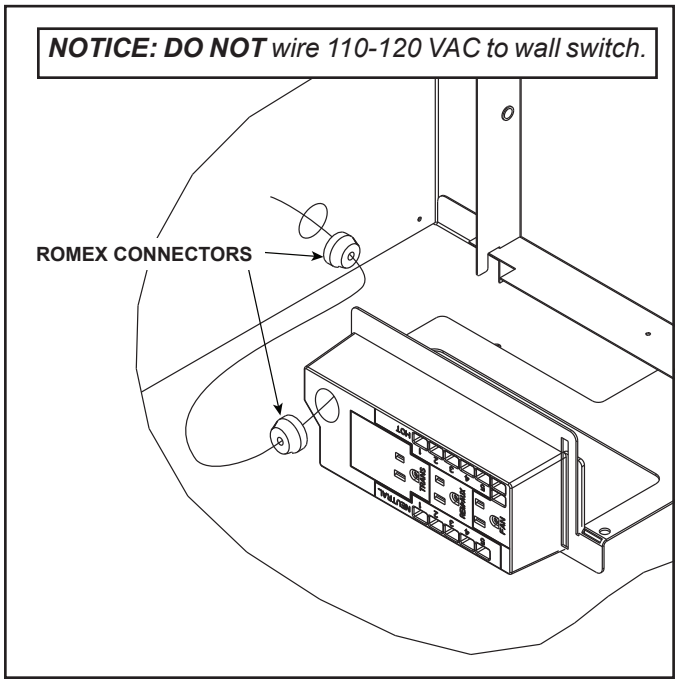

Figure 8.1 Junction Box Detail

Accessories Requirements

- This appliance may be used with a wall switch, wall mounted thermostat and/or a remote control.

Wiring for optional Hearth & Home Technologies approved accessories should be done now to avoid reconstruction. Follow instructions that come with those accessories.

Electrical Service and Repair

WARNING! Risk of Shock! *Label all wires prior to disconnection when servicing controls. Wiring errors could cause improper and dangerous operation. Verify proper operation after servicing.*

WARNING! Risk of Shock! *Replace damaged wire with type 105º C rated wire. Wire must have high temperature insulation.*

B. Wiring Requirements

IntelliFire Touch® Ignition System Wiring

- Wire the appliance junction box to 110-120 VAC for proper operation of the appliance.

WARNING! Risk of Shock or Explosion! DO NOT *wire IPI controlled appliance junction box to a switched circuit. Incorrect wiring will override IPI safety lockout.*

- Refer to Figure 8.2 IntelliFire Touch (IFT) Wiring Diagram.
- This appliance is equipped with an IntelliFire control valve which operates on a 6 volt system.

NOTICE: *Batteries should only be used as a power source in the event of an emergency power outage. Batteries should not be used as a primary long-term power source. Batteries tend to corrode over time. When using batteries as a power source, the* 6 *volt transformer must be unplugged from the receptacle.*

Do not store batteries in the battery pack when the appliance is powered by the 6 volt transformer connected to permanent electrical service.

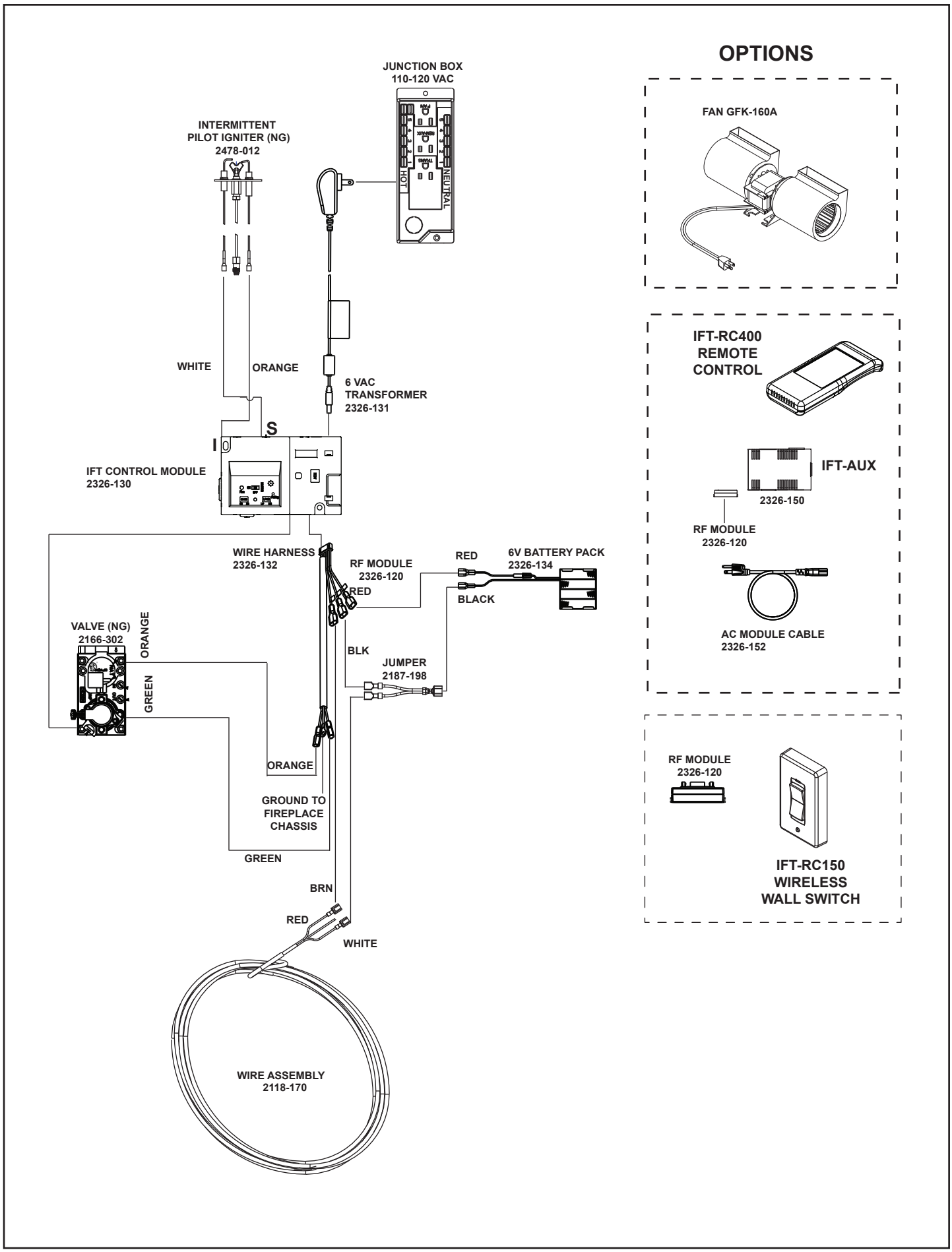

Figure 8.2 IntelliFire Touch Wiring With Wall Switch

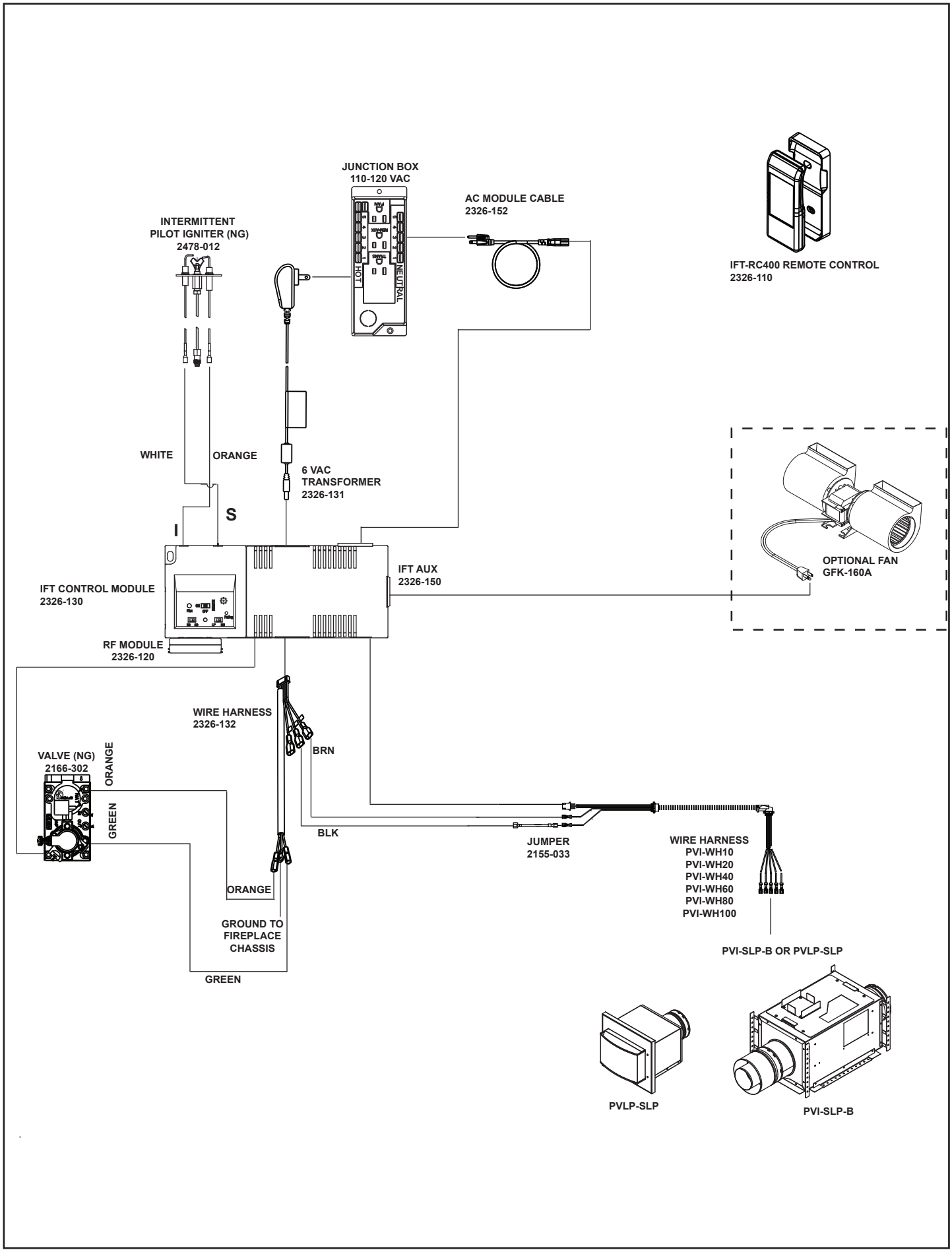

Figure 8.3 IntelliFire Touch Wiring With Optional Power Vent

C. Fan (Optional)

Installation (Without Optional Remote)

1. Install and wire the fan in appliance as shown in Figure 8.4 and Figure 8.5.
2. Wire the fan temperature sensor and adjustable speed control (rheostat switch) according to the instructions provided with the fan.
3. Attach rheostat switch to the valve bracket.

Installation (With Optional Remote)

1. Wire the fan as shown in Figure 8.3.
2. Locate the fan as shown in Figure 8.4.

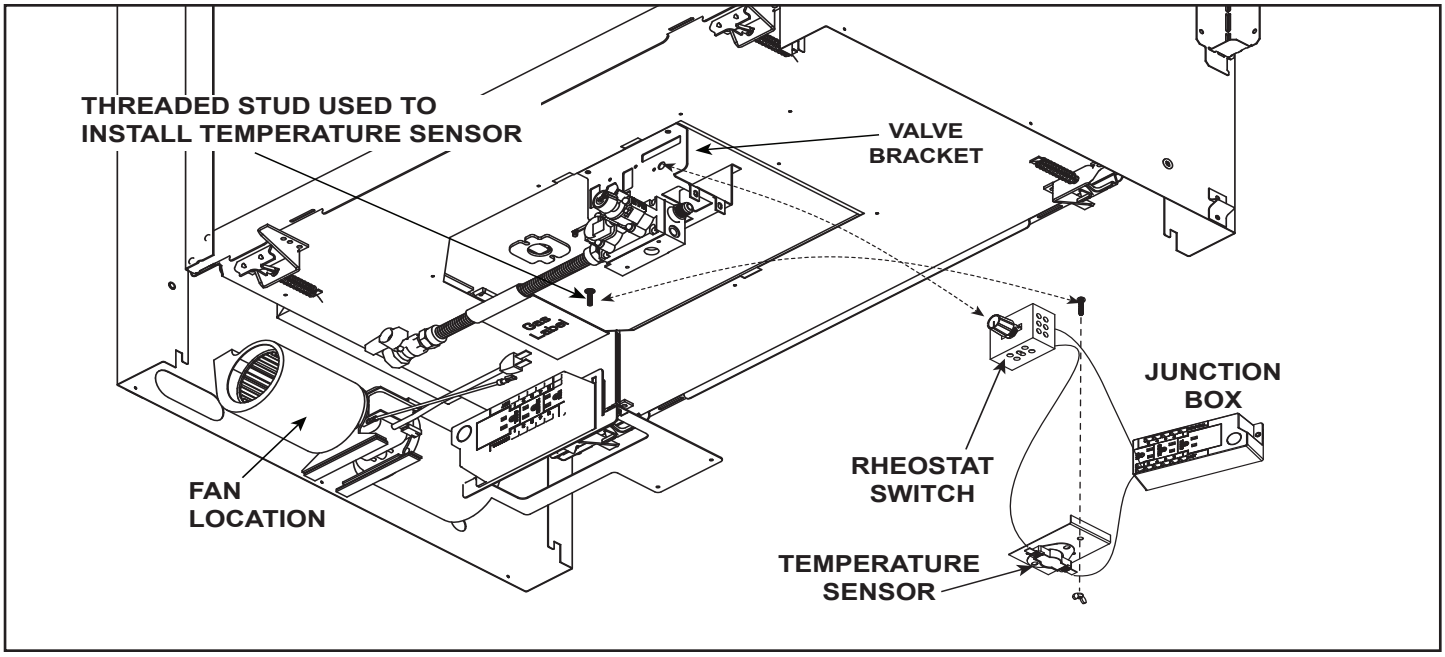

Figure 8.4 Fan Location, Fan and Rheostat Wiring

Temperature Sensor Wiring for Optional Fan

If the fan will not be installed for operation with the IFT-RC400, the temperature sensor will need to be installed. See Figure 8.4 for location of the temperature sensor and rheostat switch.

- The power supply for the appliance must be brought into the junction box.
- Install rheostat switch in location as seen in Figure 8.4.
- Connect temperature sensor switch wire and rheostat switch wires to junction box as shown in Figure 8.5.

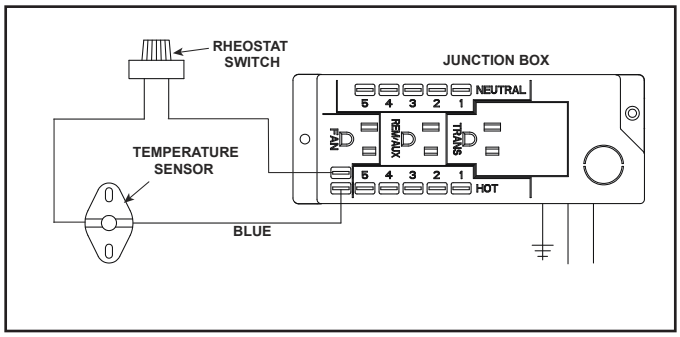

Figure 8.5 Detail of Fan Wiring with Rheostat

9 Gas Information

A. Fuel Conversion

- Make sure the appliance is compatible with available gas types.
- Conversions must be made by a qualified service technician using Hearth & Home Technologies specified and approved parts.

B. Gas Pressure

⚠ WARNING

Fire Risk.

Risk of Fire! Risk of Explosion!

High pressure will damage valve.

- Isolate gas supply piping BEFORE pressure testing gas line.
- Close the manual shutoff valve BEFORE pressure testing gas line.

- Optimum appliance performance requires proper input pressures.
- Gas line sizing requirements will be determined in ANSI Z223.1 National Fuel Gas Code in the USA and CAN/CGA B149 in Canada.
- Pressure requirements when in operation are:

Gas Pressure	Natural Gas	Propane
Minimum inlet pressure	5.0 in. w.c.	11.0 in. w.c.
Maximum inlet pressure	10.0 in. w.c.	13.0 in. w.c.
Manifold pressure	3.5 in. w.c.	10.0 in. w.c.

- Verify inlet pressures. Verify minimum pressures when other household gas appliances are operating.
- Install regulator upstream of valve if line pressure is greater than 1/2 psig.

Note: Have the gas supply line installed in accordance with local codes, if any. If not, follow ANSI Z223.1. Installation should be done by a qualified installer approved and/or licensed as required by the locality. (In the Commonwealth of Massachusetts installation must be performed by a licensed plumber or gas fitter).

Note: A listed (and Commonwealth of Massachusetts approved) 1/2 in. (13 mm) T-handle manual shut-off valve and flexible gas connector are connected to the 1/2 in. (13 mm) control valve inlet.

- **If substituting for these components, please consult local codes for compliance.**

C. Gas Connection

WARNING! Risk of Fire or Explosion! *Support control when attaching pipe to prevent bending gas line.*

- Refer to Section 3 for location of gas line access in appliance.
- Gas line may be run through knockout(s) provided.
- The gap between supply piping and gas access hole may be sealed with caulk or aluminum foil tape with a minimum of 300 ºF continuous exposure rating or stuffed with non-combustible, unfaced insulation to prevent cold air infiltration.
- Ensure that gas line does not come in contact with outer wrap of the appliance. Follow local codes.
- Pipe incoming gas line into valve compartment.
- Connect incoming gas line to the 1/2 in. (13 mm) NPT connection on manual shutoff valve.

WARNING! Risk of Fire or Explosion! *Gas build-up during line purge could ignite.*

- *A small amount of air will be in the gas supply lines.*
- *Ensure adequate ventilation.*
- *Ensure there are no ignition sources such as sparks or open flames.*

Light the appliance. It will take a short time for air to purge from lines. When purging is complete the appliance will light and operate normally.

WARNING! Risk of Fire, Explosion or Asphyxiation! *Check all fittings and connections with a non-corrosive commercially available leak-check solution.* ***DO NOT*** *use open flame. Fittings and connections could have loosened during shipping and handling.*

D. High Altitude Installations

NOTICE: *If the heating value of the gas has been reduced, these rules do not apply. Check with your local gas utility or authorities having jurisdiction.*

When installing above 2000 feet elevation:

- In the USA: Reduce input rate 4% for each 1000 feet above 2000 feet.
- In CANADA: Input ratings are certified without a reduction of input rate for elevations up to 4500 feet (1370 m)above sea level. Please consult provincial and/or local authorities having jurisdiction for installations at elevations above 4500 feet (1370 m).

Check with your local gas utility to determine proper orifice size.

E. Air Shutter Setting

Air shutter settings should be adjusted by a qualified service technician at the time of installation. The air shutter is set at the factory for minimum vertical vent run. Minimum vent run consists of enough horizontal vent pipe to exit 2 X 6 wall construction (approximately 8 inches). Adjust air shutter for longer vertical runs. See Figure 4.12.

- Loosen the wing nut.
- Move the wing nut to adjust the air shutter. See Figure 9.1.
- Tighten the wing nut when adjustment is complete.

NOTICE: *If sooting occurs, provide more air by opening the air shutter.*

Note: Adjust air shutter after flame has reached full maturity (approximately 20-40 minutes).

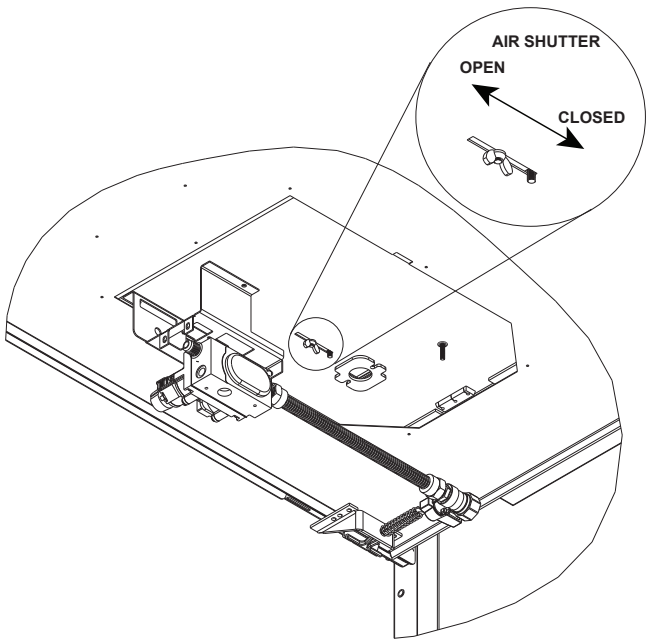

Figure 9.1 Air Shutter

Air Shutter Settings (Factory Set to Minimum Vent Run)

GAS TYPE	MIN. VENT RUN	MAX. VENT RUN
NG	1/8 in.	Full Open
PROPANE	Full Open	Full Open

Minimum and maximum shutter settings were determined per the vent configuration shown in Figure 4.22.

- Minimum vent run consists of enough horizontal vent pipe to exit 2 X 6 wall construction (approximately 8 inches).
- Maximum vent run consists of "H_1 Maximum" shown in Figure 4.22.

Note: All vent runs may need to be evaluated for ideal shutter settings. Shutter distances may vary due to vent run, fuel quality, and elevation.

Shutter Setting Verification / Flame Appearance

- After 15 minutes, the flames will be a yellow/blue mix. The front flames may be blue at this time.
- After 30 minutes, the flames should be yellow with some blue flames near the burner ports.
- After 1 hour, the flame will be at its maximum maturity.

NOTICE: *Flames should not appear orange or stretch to the top refractory/ top of firebox. If flames are dark orange with dark, smoky tips, provide more primary air to the burner by opening the air shutter accordingly.*

10 Finishing

A. Facing Material

⚠ WARNING

Risk of Fire!

DO NOT *apply combustible materials beyond the minimum clearances. Comply with all minimum clearances to combustibles as specified in this manual. Materials overlapping into non-combustible zones could ignite and will interfere with air flow through decorative barrier fronts.*

- Metal front of appliance may be covered with non-combustible materials only.
- Facing and/or finishing materials must not interfere with air flow through decorative barrier fronts, removal of decorative barrier fronts or access for service.
- Facing and/or finishing materials must never overhang into the glass opening.
- Observe all clearances when applying combustible materials.
- Seal gaps between the finished wall and appliance top and sides using a 300 ºF minimum sealant. Refer to Figure 10.1 and Figure 10.2.

NOTICE: *Surface temperatures around the appliance will become warm while the appliance is in operation. Ensure finishing materials used for all surfaces (floor, walls, mantels, etc.) will withstand temperatures up to 190ºF.*

If using vinyl flooring, refer to Section 3.E.

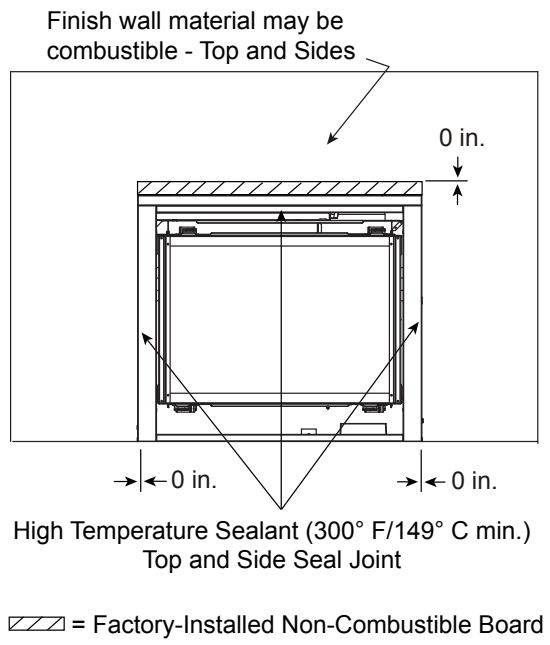

Figure 10.1 Non-combustible Facing Diagram

WARNING! *Risk of Overheating!* ***DO NOT*** *allow gap between finishing materials and front of appliance.*

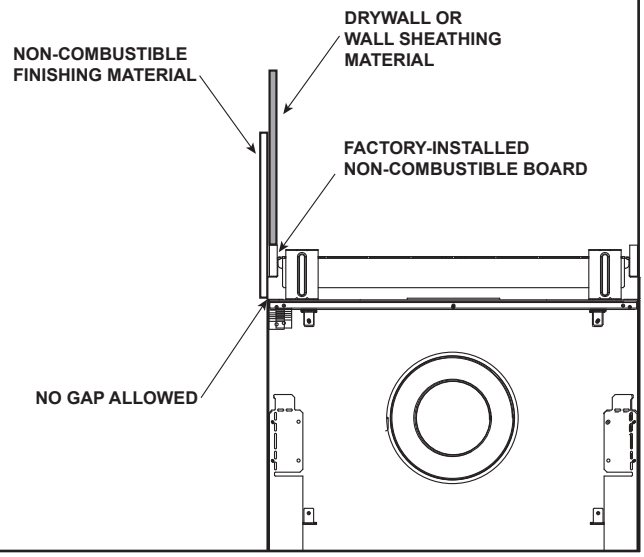

Figure 10.2 Finishing Material Installed

B. Installing a Television

If installing a television (TV) above the appliance, see Section 2.B.

C. Mantel and Wall Projections

WARNING! Risk of Fire! *Comply with all minimum clearances as specified. Mantel MUST be fastened to wall with no gaps.*

- *Framing closer than the minimums listed must be constructed entirely of non-combustible materials (i.e., steel studs, concrete board, etc.).*
- *No gaps allowed between the wall and the bottom of the mantel.*
- Combustible mantel legs and wall projections may be applied over the non-combustible board supplied with the appliance. Follow guidelines as shown in the figures below for mantels, mantel legs and wall projections.

> **Note:** Measurement is taken from top/side of the opening, NOT the top/side of the fireplace.

Combustible Mantels

PIER-DV36IN Combustible Mantel

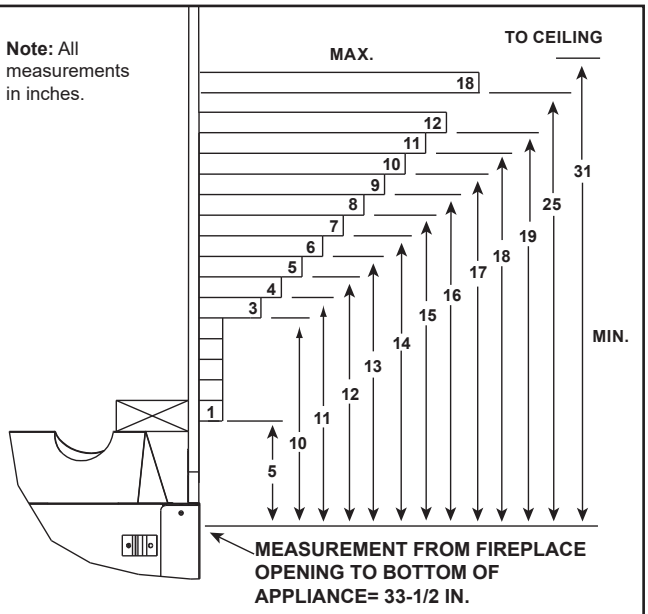

Figure 10.3 Minimum Vertical and Maximum Horizontal Dimensions of Combustibles

ST-DV36IN Combustible Mantel

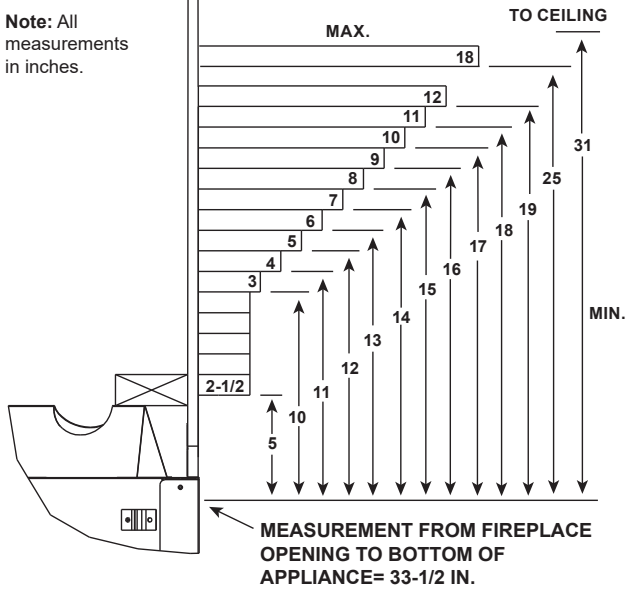

Figure 10.4 Minimum Vertical and Maximum Horizontal Dimensions of Combustibles

Non-Combustible Mantels

PIER-DV36IN Non-Combustible Mantel

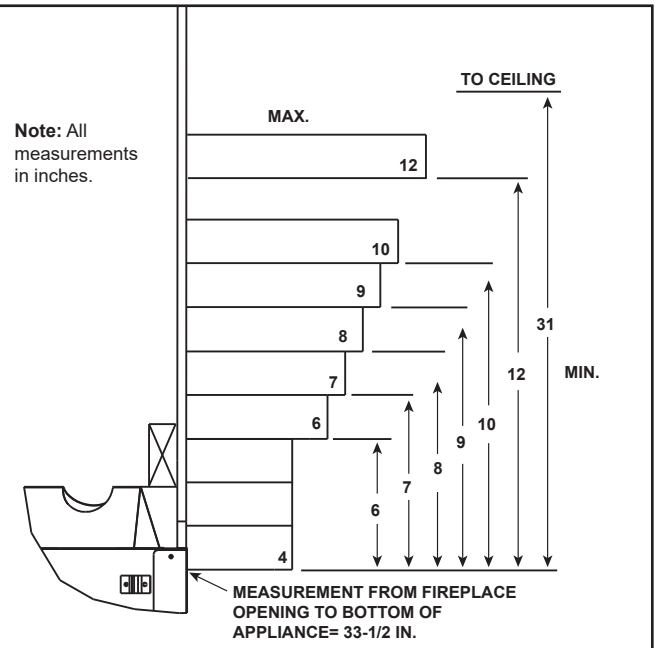

Figure 10.5 Minimum Vertical and Maximum Horizontal Dimensions of Non-Combustibles

ST-DV36IN Non-Combustible Mantel

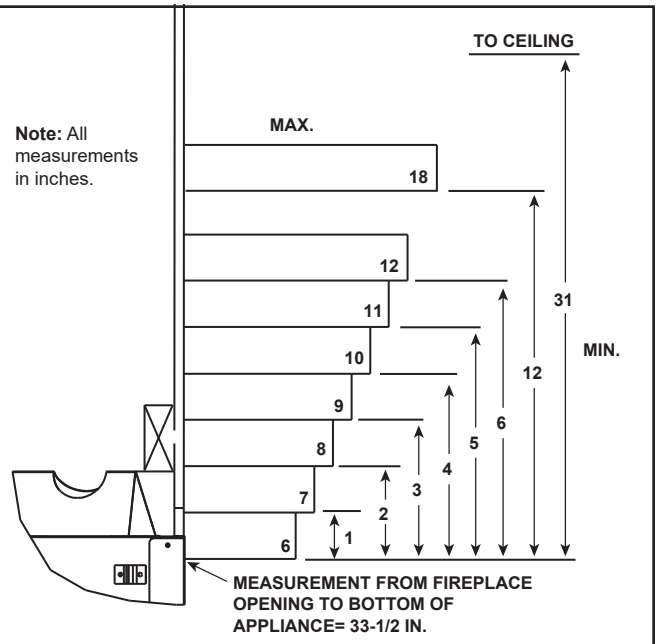

Figure 10.6 Minimum Vertical and Maximum Horizontal Dimensions of Non-Combustibles

Combustible Mantel Legs or Wall Projections

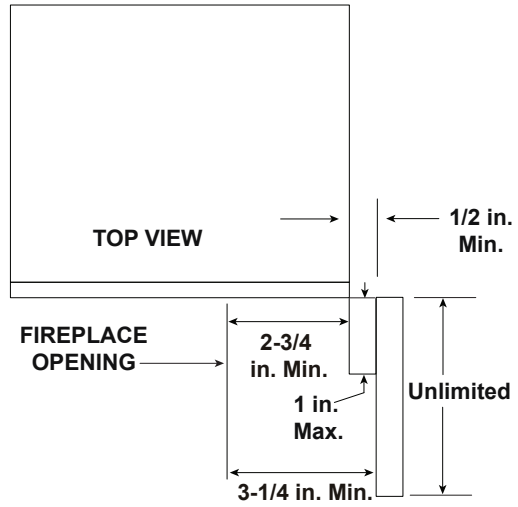

Note: Clearance from opening to perpendicular wall.

Figure 10.7 Combustible Mantel Leg or Wall Projections (Acceptable on both sides of opening)

Non-Combustible Mantel Legs or Wall Projections

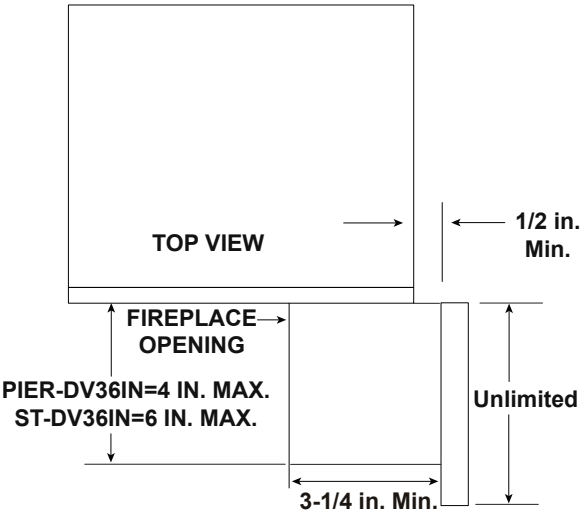

Figure 10.8 Non-Combustible Mantel Leg (Acceptable on both sides of opening)

D. Decorative Barrier Front Dimensions for Finishing

The MSFR-36-BK decorative barrier front is certified for use with the ST-DV36IN and PIER-DV36IN. The MSEP-36-BK end panel is approved for use with the PIER-DV36IN. Only decorative barrier fronts certified for use with these appliance models may be used. The MSFR-36-BK and MSEP-36-BK are inside fit fronts.

Decorative Barrier Front

MSFR-36-BK (ST-DV36IN / PIERDV36IN)

See Figure 10.9.

MODEL	FIT	FINISH MATERIAL MAXIMUM THICKNESS	SEE FIGURE
PIER-DV36IN	Inside	4 IN.	10.8
ST-DV36IN	Inside	6 IN.	10.8

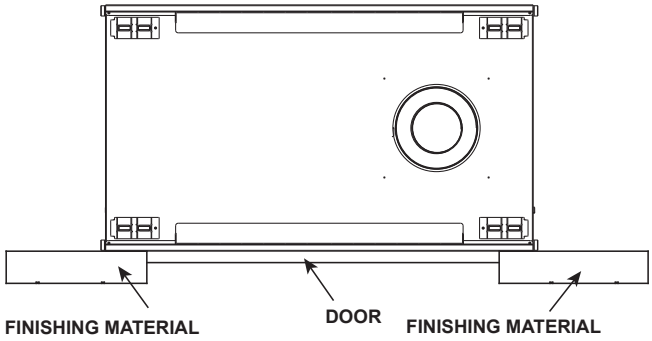

Stop finishing material flush with opening.

Figure 10.9 MSFR-36-BK Decorative Barrier Front

Decorative Barrier End Panel

MSEP-36-BK (PIER-DV36IN Only)

See Figure 10.10.

MODEL	FIT	FINISH MATERIAL MAXIMUM THICKNESS	SEE FIGURE
PIER-DV36IN	Inside	4 IN.	10.9

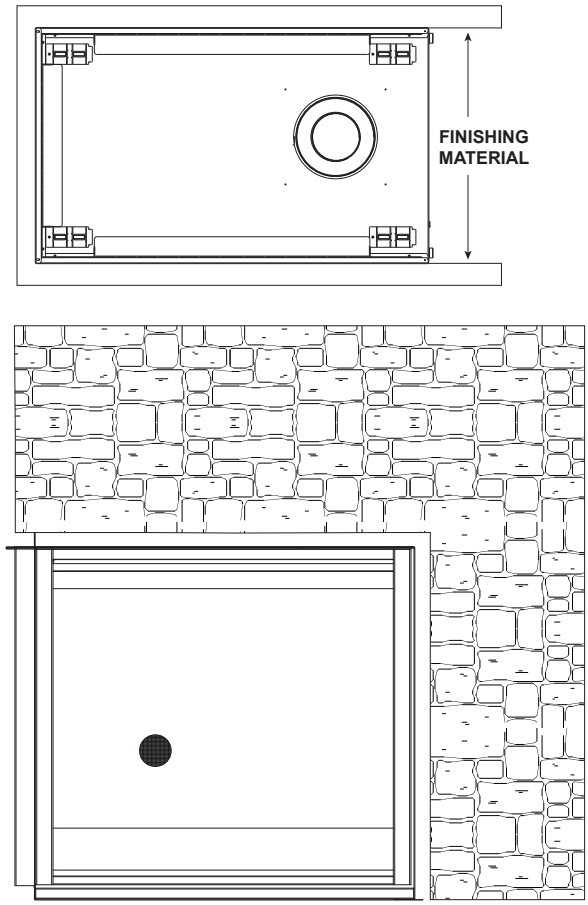

*Finish up to the appliance opening for best results.

Figure 10.10 PIER-DV36IN Decorative Barrier Front Finishing

11 Appliance Setup

A. Remove the Shipping Materials

WARNING! Risk of Fire! *Close the ball valve before installing the splatter guard to prevent accidental lighting. Remove the splatter guard before lighting the appliance.*

Remove shipping materials from inside or underneath the firebox.

- The splatter guard is a piece of corrugated material used to protect the appliance during the installation process before finishing work on the whole hearth is complete. Splatter guards may be factory installed or accompany the decorative barrier front of the appliance, depending on the fireplace model. Splatter guards must be removed before appliance is fired.

For instructions on removing and replacing the fixed glass assembly, see Section 11.F.

B. Clean the Appliance

Clean/vacuum any sawdust that may have accumulated inside the firebox or underneath in the control cavity.

C. Install the Refractory (Optional)

Optional glass or brick refractory kits are available for use with these models. Install the glass refractory per instructions included with the kit.

D. Glowing Ember and Lava Rock Placement

Place glowing embers as shown in Figure 11.1.

WARNING! Risk of Explosion! Follow ember placement instructions in manual. DO NOT place embers directly over burner ports. Replace ember material annually. Improperly placed embers interfere with proper burner operation.

Placing the Ember Material

Ember material is shipped with this gas appliance. To place the ember material:

- Embers may only be placed in areas as shown in Figure 11.1. Care should be taken not to cover the lighting trail of ports near pilot assembly as shown in Figure 11.1.
- When placing Glowing Embers® onto the burner care should be taken so that the ports are not covered. Place the dime-size ember pieces. See Figure 11.1. Failure to follow this procedure will likely cause lighting and sooting problems.
- Place Lava Rock on areas of base pan away from the burner as shown in Figure 11.2. Do not place lava rock on burner. Use this material to give the appliance a realistic ash bed.
- Save the remaining ember materials for use during appliance servicing. The embers provided should be enough for 3 to 5 applications.

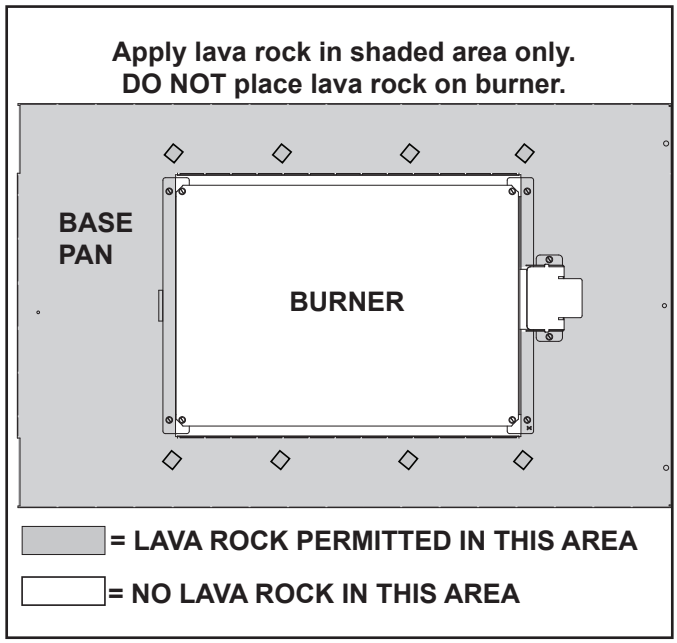

Figure 11.2 Placement of Lava Rock

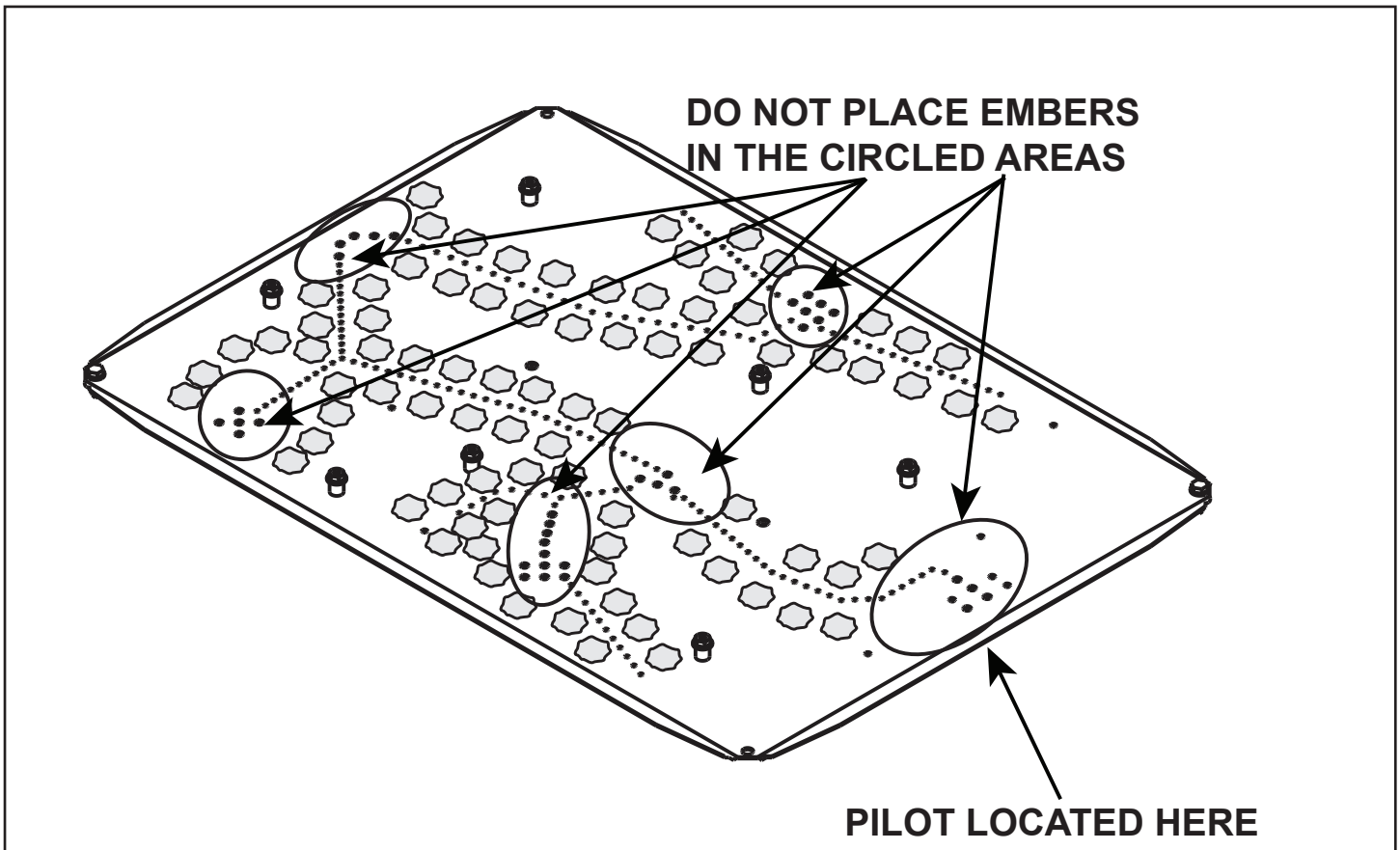

Figure 11.1 Ember Placement

E. Install the Log Assembly

LOG PLACEMENT INSTRUCTIONS

Log Set Assembly: LOGS-2128

Models: ST-36TRB-IPI, PIER-36TRB-IPI
ST-36TVB-IPI, LCOR-36TRB-IPI, RCOR-36TRB-IPI
ST-36TRB-IFT, PIER-36TRB-IFT, ST-DV36IN, PIER-DV36IN

CAUTION: DO NOT reposition logs that have been factory installed! Follow these instructions to position the logs that were packaged separately.

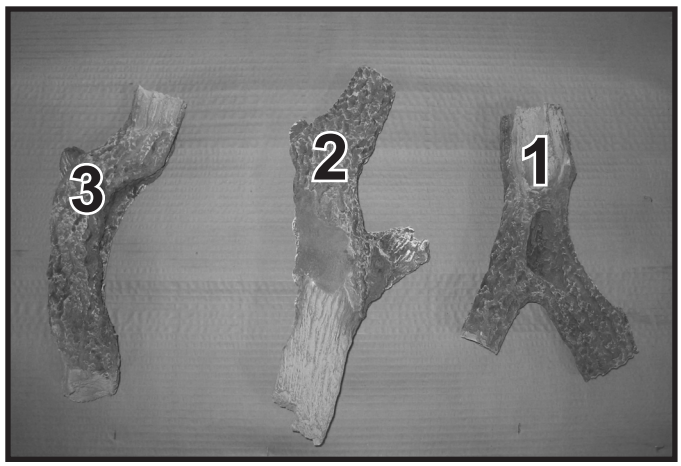

Figure 1. Log Assembly Location

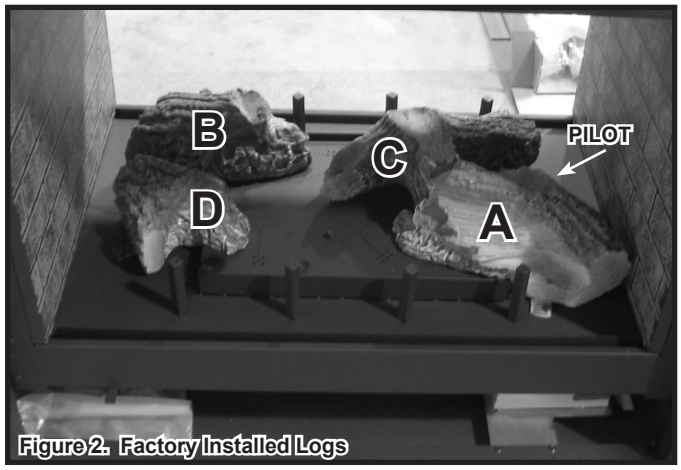

Figure 2. Factory Installed Logs

STEP 1. ***CAUTION! Logs are fragile!*** Carefully remove the logs and cardboard tray from the inside of the fireplace. See Figure 1. Remove the microfoam and inspect the logs for damage. Inspect the four factory installed logs for damage. Locate the pilot in order to verify your position in relation to the appliance. See Figure 2.

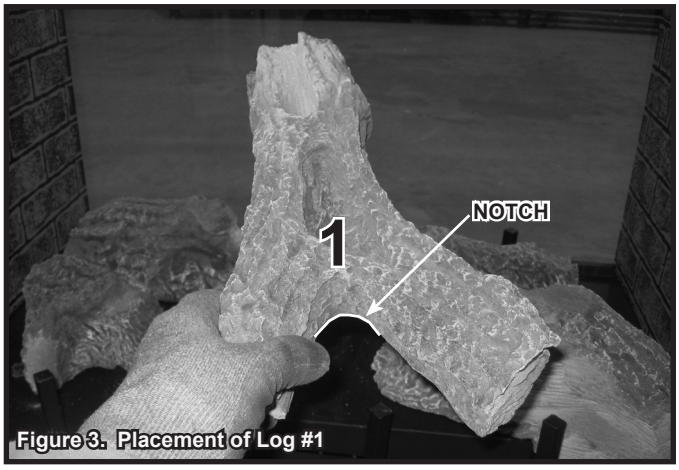

Figure 3. Placement of Log #1

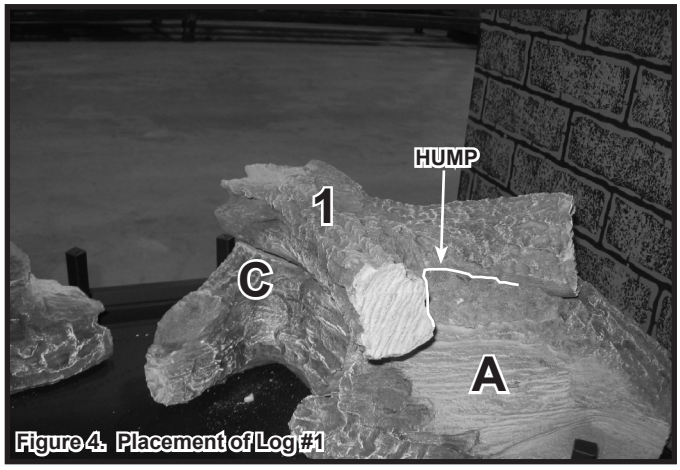

Figure 4. Placement of Log #1

STEP 2. Log #1 (SRV2128-704): Mate the notch on the end of log # 1 with the hump on top of log A. Set the other end of Log #1 onto the smooth area on top of Log C.

Figure 5. Placement of Log #2

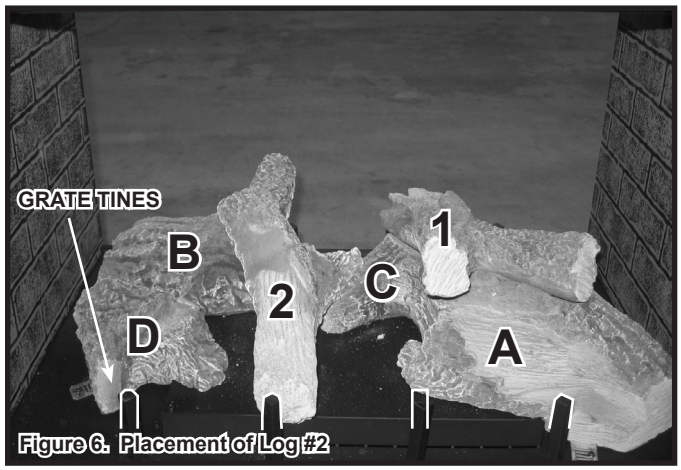

Figure 6. Placement of Log #2

STEP 3. Log #2 (SRV2128-705): The Y-shaped end of log #2 should rest on log B and log C. The other end should come in contact with the second grate tine from the left. Mate the bottom of log # 2 with the notches on top of log B and the smooth area on top of the end of log C.

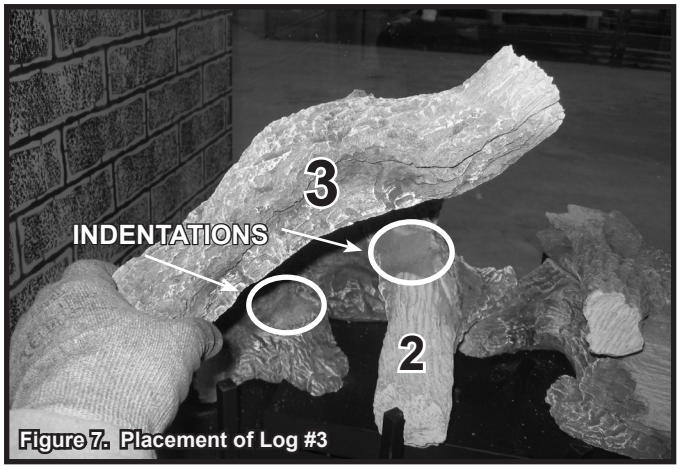

Figure 7. Placement of Log #3

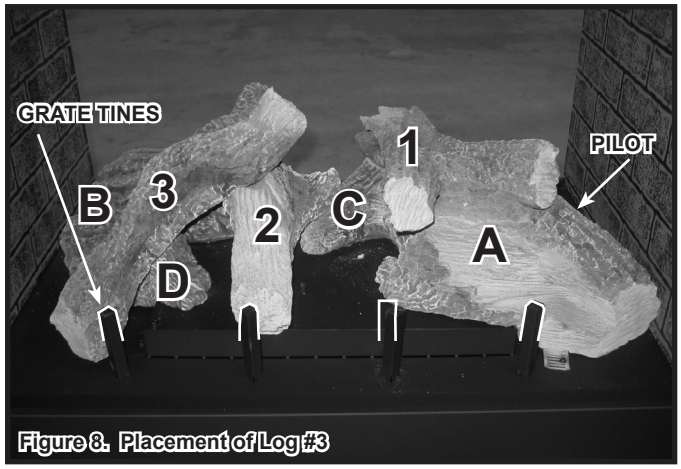

Figure 8. Placement of Log #3

STEP 4. Log #3 (SRV2128-707): The bottom end of log #3 should come in contact with the far left grate tine. Mate the bottom of log # 3 with the indentations on Log D and the top of Log #2.

2128-935C

F. IntelliFire Touch® Control System Setup

- Detailed instructions for electrical wiring and connections are provided in Section 8.
- Determine if this appliance is equipped with a Module Reset Switch. See Section 8. Verify this switch is in the ON position.
- Verify that the 3-Position switch on the IFT-ECM is switched to the REMOTE position. Detailed Operating Instructions for the IFT-ECM are provided in Section 3.K of the Owner's Manual.

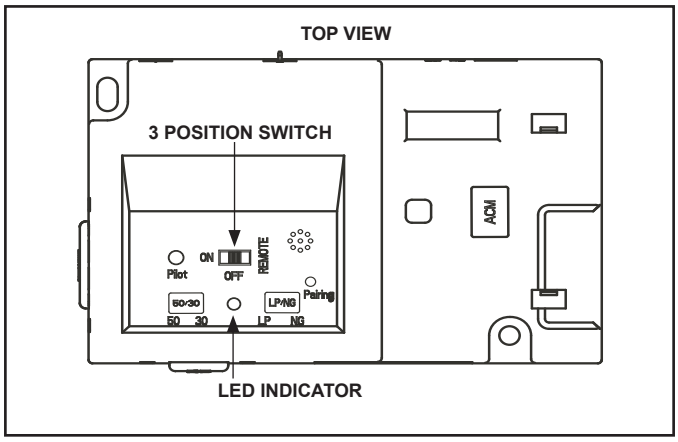

Figure 11.3 IFT-ECM

If this appliance is being upgraded to an optional IntelliFire Touch Remote Control, and/or optional power vent, fan, or light kit are added as new accessory upgrade(s) to fireplace:

1. The RC400 remote will need to be paired to the ECM.
2. Follow the installation instructions provided with the IntelliFire Touch remote and/or accessory kit(s).

G. Install Fixed Glass Assembly

WARNING! Risk of Asphyxiation! *Handle fixed glass assembly with care. Inspect the gasket to ensure it is undamaged and inspect the glass for cracks, chips or scratches.*

- ***DO NOT*** *strike, slam or scratch glass.*
- ***DO NOT*** *operate fireplace with glass removed, cracked, broken or scratched.*
- *Replace as a complete assembly.*
- Replace the glass assembly on the appliance.
- Pull out the four glass latches and place in the grooves on the glass frame top and bottom.
- Make sure all sides are replaced properly.

Removing Fixed Glass Assembly

- Pull the four glass latches out of the grooves on the glass frame top and bottom.
- Remove the glass assembly from the appliance.
- Multiple sides may be able to be removed based upon model.

Replacing Fixed Glass Assembly

- Replace the glass assembly on the appliance.
- Pull out the four glass latches and place in the grooves on the glass frame top and bottom.
- Make sure all sides are replaced properly.

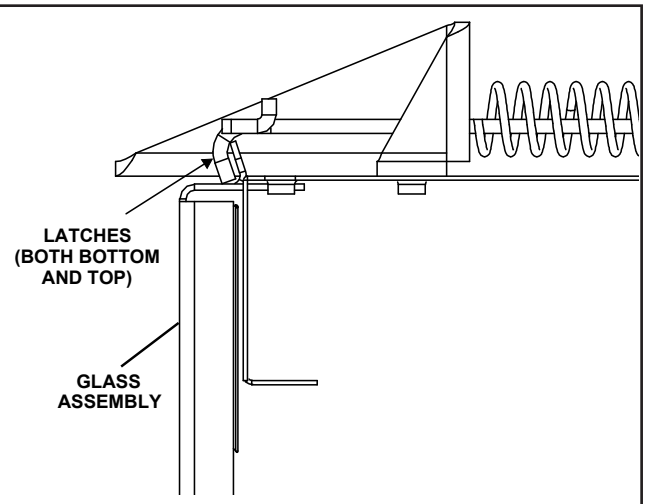

Figure 11.4 Fixed Glass Assembly

H. Install Decorative Barrier Front

WARNING! Risk of Fire! *Install ONLY decorative barrier fronts approved by Hearth & Home Technologies. Unapproved decorative barrier fronts could cause fireplace to overheat.*

IMPORTANT! This fireplace requires an installed decorative barrier front to prevent direct contact with the hot viewing glass. DO NOT operate the fireplace with the barrier removed.

Contact your dealer or Hearth & Home Technologies if the barrier is not present or help is needed to properly install one.

For more information refer to the instructions supplied with your decorative barrier front.

A. Vent Components Diagrams

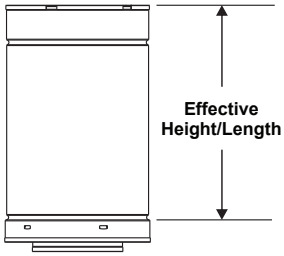

DVP Pipe (see chart)

Pipe	Effective Length	
	Inches	Millimeters
DVP4	4	102
DVP6	6	152
DVP12	12	305
DVP24	24	610
DVP36	36	914
DVP48	48	1219
DVP6A	3 to 6	76 to 152
DVP12A	3 to 12	76 to 305

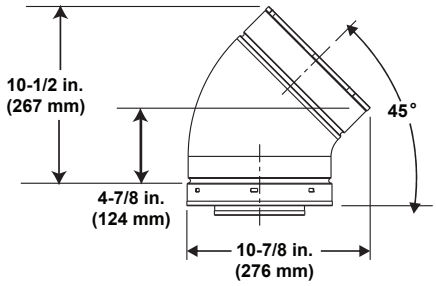

DVP45 (45º Elbow)

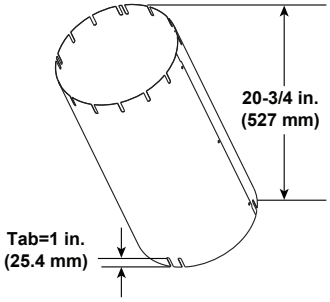

Finished Height: 19-3/4 in./502 mm
UNIV-AS2 (Attic Insulation Shield)

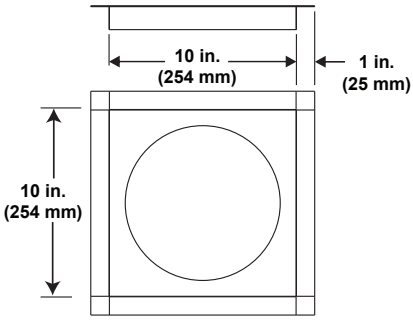

DVP-FS (Ceiling Firestop)

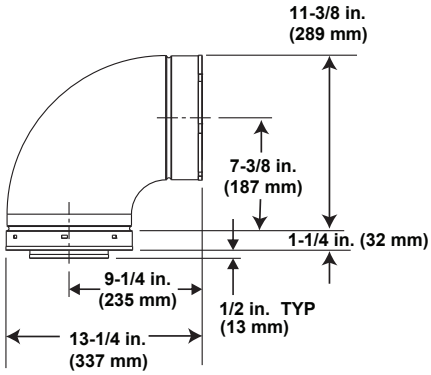

DVP90ST (90° Elbow)

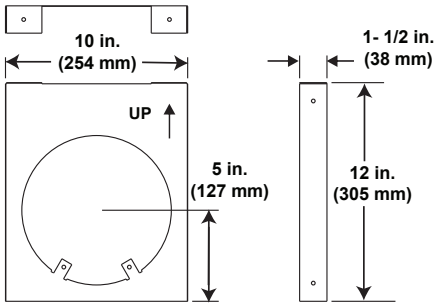

DVP-HVS (Vent Support)

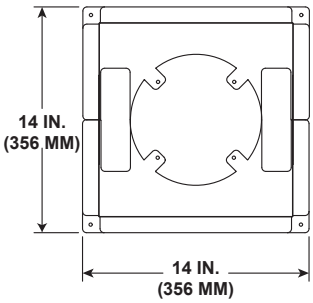

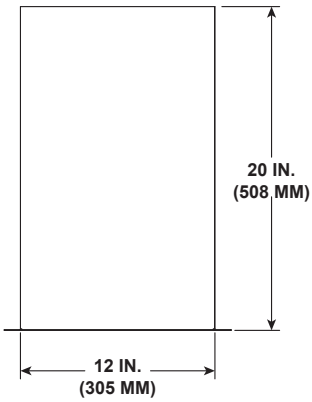

DVP-RDS
ROOF DECK INSULATION SHIELD

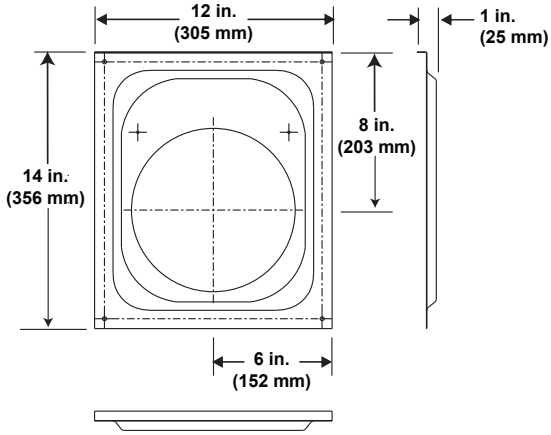

DVP-WS (Wall Shield Firestop)

Figure 12.1 DVP Vent Components

A. Vent Components Diagrams (*continued*)

Note: Heat shields MUST overlap by a minimum of 1-1/2 in. (38 mm). **The heat shield is designed to be used on a wall 4 in. to 7-1/4 in. (102 mm to 184 mm) thick.** If wall thickness is less than 4 in. (102 mm) the existing heat shields must be field trimmed. If wall thickness is greater than 7-1/4 in. (184 mm) a DVP-HSM-B will be required.

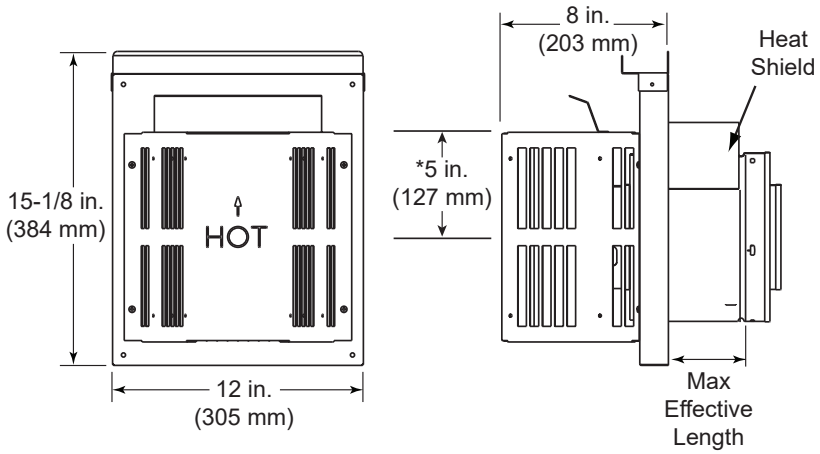

DVP-TRAP
Horizontal Termination Cap

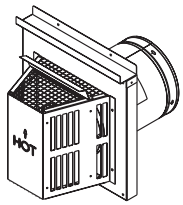

* Center of the horizontal vent pipe to the vertical measuring surface.

Term Cap	Minimum Effective Length	Maximum Effective Length
Trap1	3-1/8 in.	4-5/8 in.
	79 mm	117 mm
Trap2	5-3/8 in.	9-3/8 in.
	137 mm	238 mm

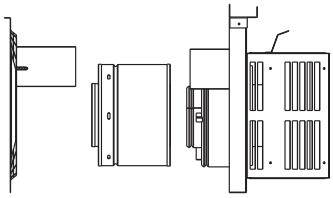

DVP-TRAP1

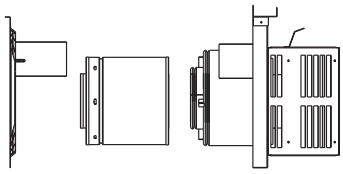

DVP-TRAP2

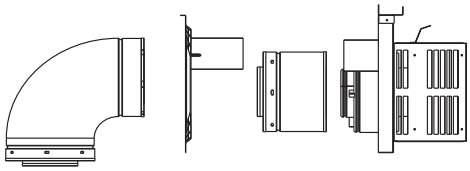

DVP-TRAPK1

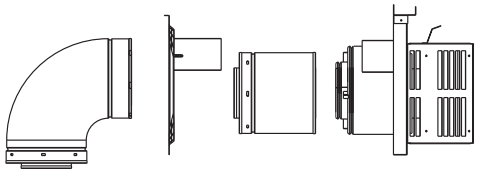

DVP-TRAPK2

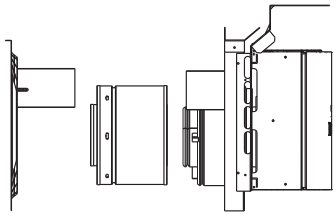

DVP-HPC1
Can adjust 2-1/8 in. (4-1/4 to 6-3/8)

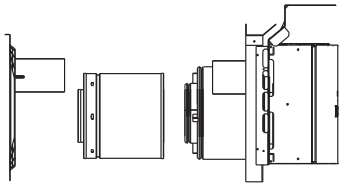

DVP-HPC2
Can adjust 4-1/8 in. (6-3/8 to 10-1/2)

Figure 12.2 DVP Vent Components

A. Vent Components Diagrams (*continued*)

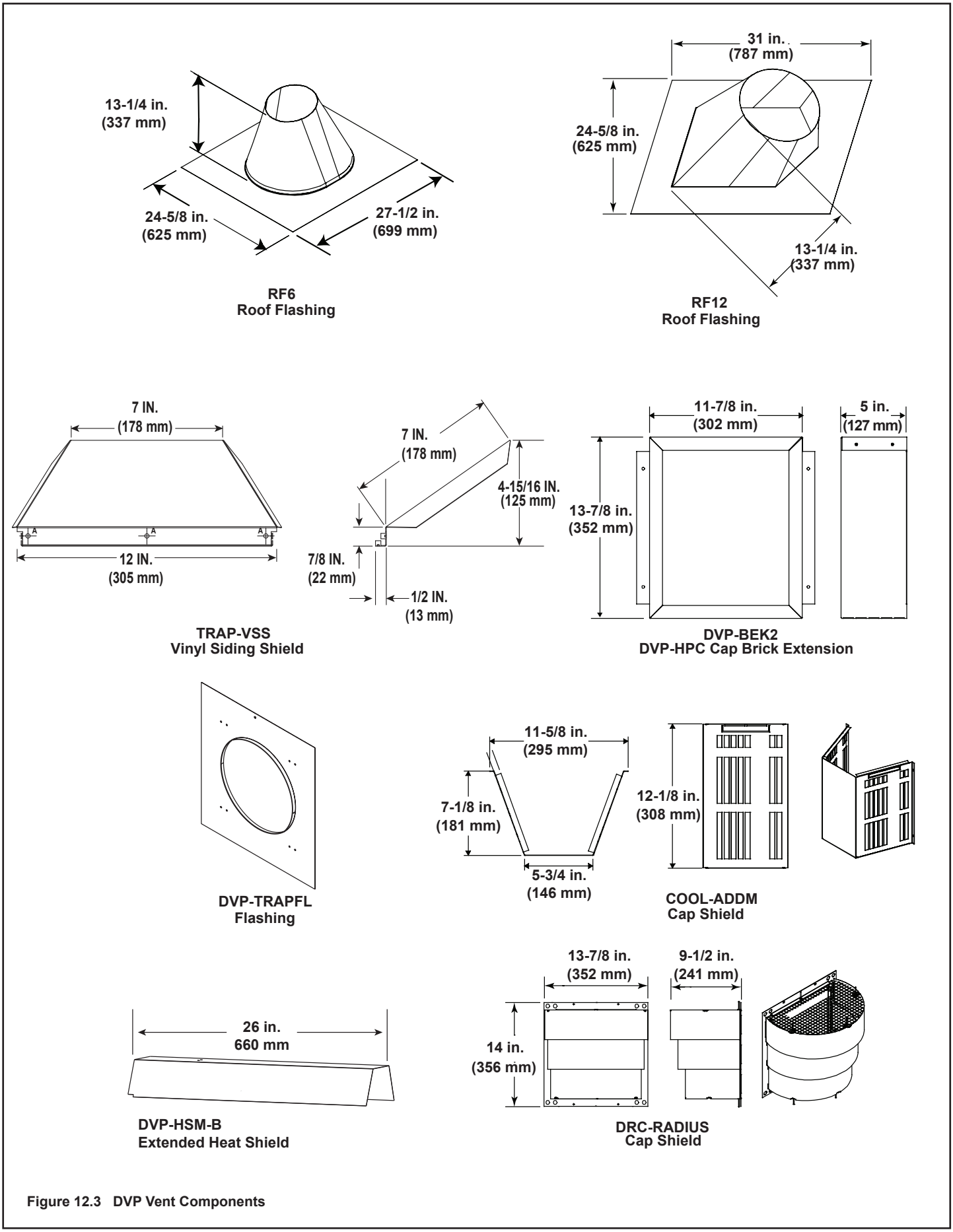

Figure 12.3 DVP Vent Components

A. Vent Components Diagrams (*continued*)

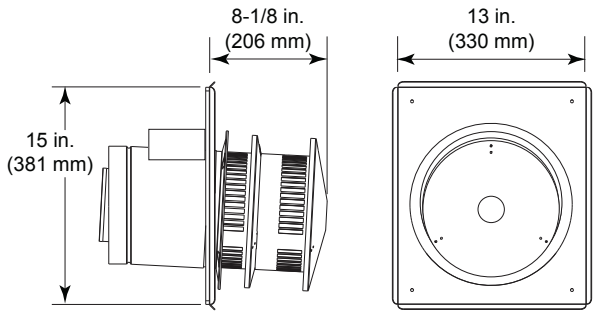

DVP-HRC-SS

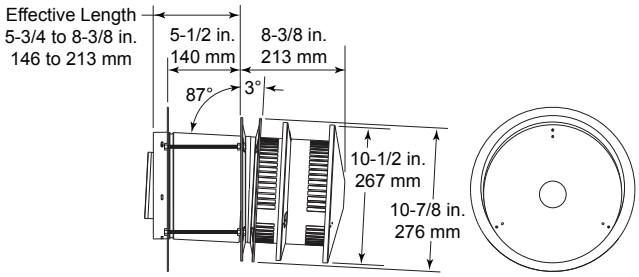

DVP-HRC-ZC-SS

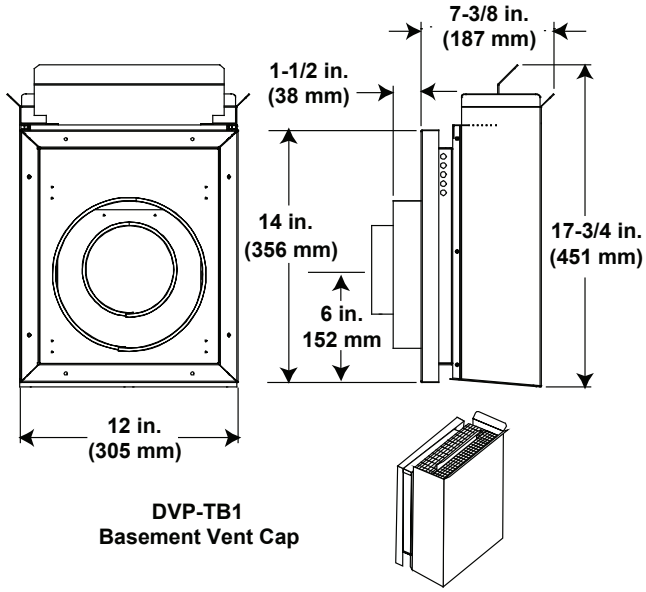

DVP-TB1
Basement Vent Cap

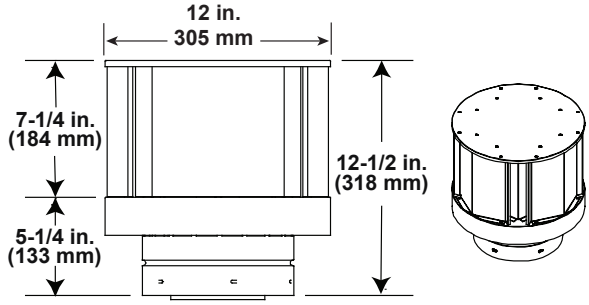

DVP-TVHW
VerticalTermination Cap (Highwind)

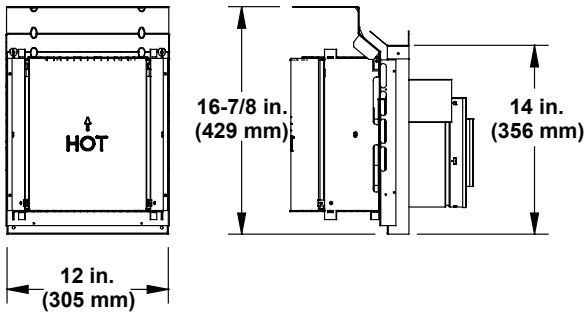

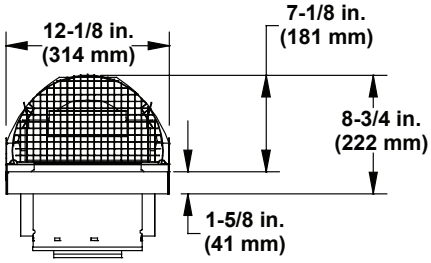

DVP-HPC
High Performance Cap

Figure 12.4 DVP Vent Components

DECORATIVE TERMINATIONS/SHROUDS

Only use listed decorative termination caps/shrouds with Hearth & Home Technologies approved venting systems.

This applies to both DVP and SLP venting systems.

Decorative Terminations Caps/Shrouds

DTO134
DTO146
DTS134
DTS146
LDS33
LDS46
LDS-BV

A. Vent Components Diagrams *(continued)*

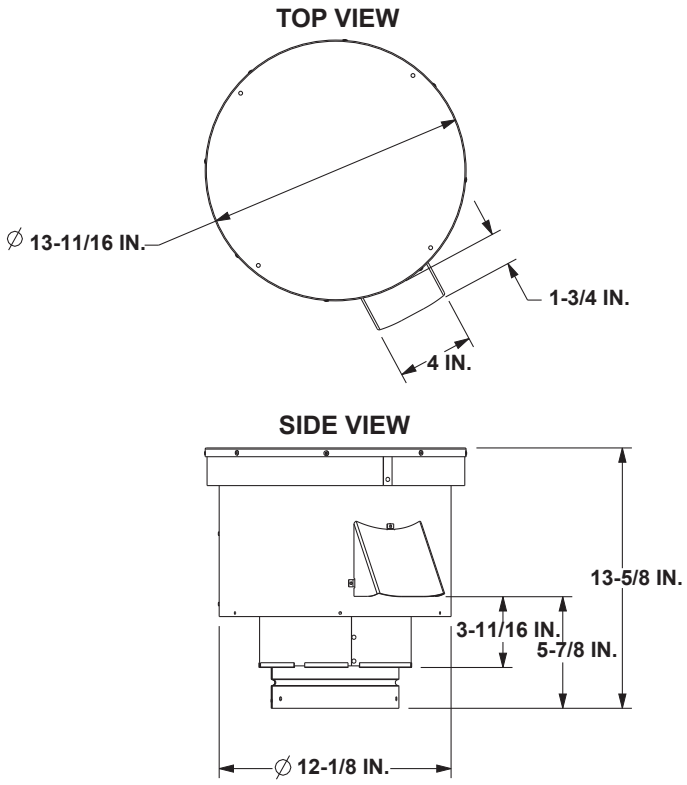

PVV-SLP
Vertical Power Vent

Optional Wire Harness	
DESCRIPTION	**PART NUMBER**
10 FT PV Wire Harness	PVI-WH10
20 FT PV Wire Harness	PVI-WH20
40 FT PV Wire Harness	PVI-WH40
60 FT PV Wire Harness	PVI-WH60
80 FT PV Wire Harness	PVI-WH80
100 FT PV Wire Harness	PVI-WH100

Note: A wire harness is required to power the PVV-SLP and connect it to the appliance. It is ordered separately from the PVV-SLP. Contact your dealer to order.

Note: The PVV-SLEEVE-12 and/or PVV-SLEEVE-48 is required to be installed with the PVV-SLP. It is ordered separately from the PVV-SLP. Contact your dealer to order.

Note: The PVV-SLP requires one of the following options to be installed on this appliance.
Option A: IFT-RC400 and/or IFT-WFM, IFT-ACM and IntelliFire App that can be downloaded from the app store.
OR
Option B: IFT-RC150, IFT-ACM, IFT-WFM and an IntelliFire App that can be downloaded from the app store. These accessories are purchased separately from the PVV-SLP. Contact your dealer to order.

Figure 12.5 PVV-SLP Vent Components

A. Vent Components Diagrams *(continued)*

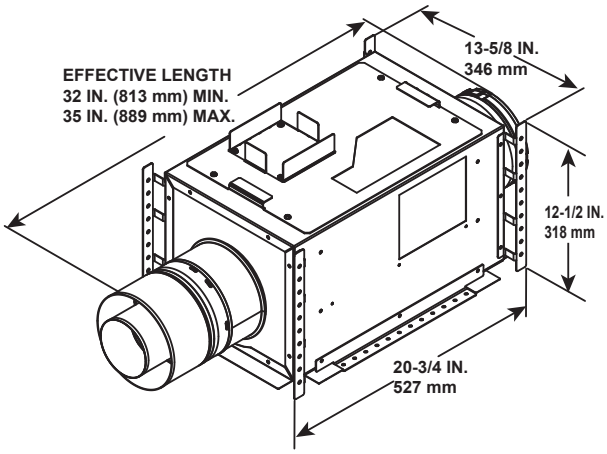

PVI-SLP-B
Power Vent Inline

Optional Wire Harness	
DESCRIPTION	**PART NUMBER**
10 FT PV Wire Harness	PVI-WH10
20 FT PV Wire Harness	PVI-WH20
40 FT PV Wire Harness	PVI-WH40
60 FT PV Wire Harness	PVI-WH60
80 FT PV Wire Harness	PVI-WH80
100 FT PV Wire Harness	PVI-WH100

Note: Wire harnesses required to power the PVI-SLP-B connect to the appliance and are ordered separately from PVI-SLP-B. Contact your dealer to order.

Note: The PVI-SLP-B requires one of the following options to be installed on this appliance.
Option A: IFT-RC400 and/or IFT-WFM, IFT-ACM and IntelliFire App that can be downloaded from the app store.
OR
Option B: IFT-RC150, IFT-ACM, IFT-WFM and an IntelliFire App that can be downloaded from the app store. These accessories are purchased separately from the PVI-SLP-B. Contact your dealer to order.

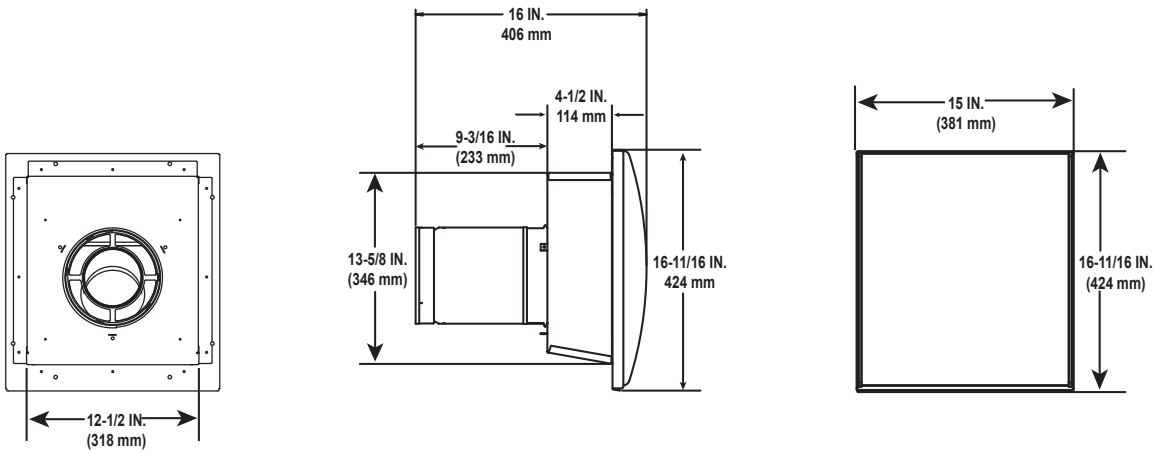

SLP-LPC
SLP Low Profile Cap
(Approved for use with PVI-SLP-B only)

Figure 12.6 PVI-SLP-B Vent Components

A. Vent Components Diagrams *(continued)*

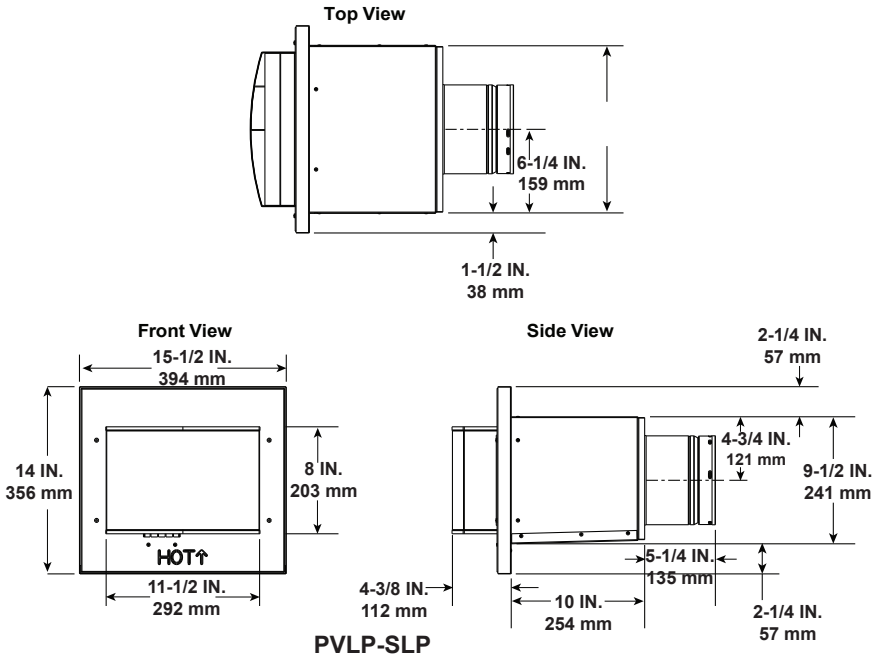

PVLP-SLP
Power Vent Low Profile

Note: A PVLP-HS heat shield is available and sold separately. Use if the PVLP-SLP is installed in a high traffic area.

Note: Wire harnesses required to power the PVLP-SLP connect to the appliance and are ordered separately from PVLP-SLP. Contact your dealer to order.

Note: The PVLP-SLP requires one of the following options to be installed on this appliance.
Option A: IFT-RC400 and/or IFT-WFM, IFT-ACM and IntelliFire App that can be downloaded from the app store.
OR
Option B: IFT-RC150, IFT-ACM, IFT-WFM and an IntelliFire App that can be downloaded from the app store. These accessories are purchased separately from the PVLP-SLP. Contact your dealer to order.

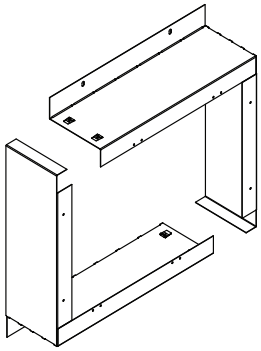

PVLP-BEK
Brick Kit

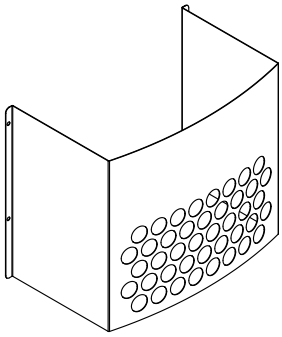

PVLP-HS
Heat Shield

Optional Wire Harness	
DESCRIPTION	**PART NUMBER**
10 FT PV Wire Harness	PVI-WH10
20 FT PV Wire Harness	PVI-WH20
40 FT PV Wire Harness	PVI-WH40
60 FT PV Wire Harness	PVI-WH60
80 FT PV Wire Harness	PVI-WH80
100 FT PV Wire Harness	PVI-WH100

Figure 12.7 PVLP-SLP Vent Components

A. Vent Components Diagrams *(continued)*

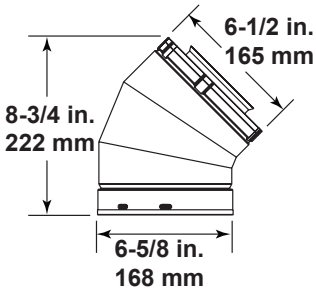

SLP45
45° Elbow

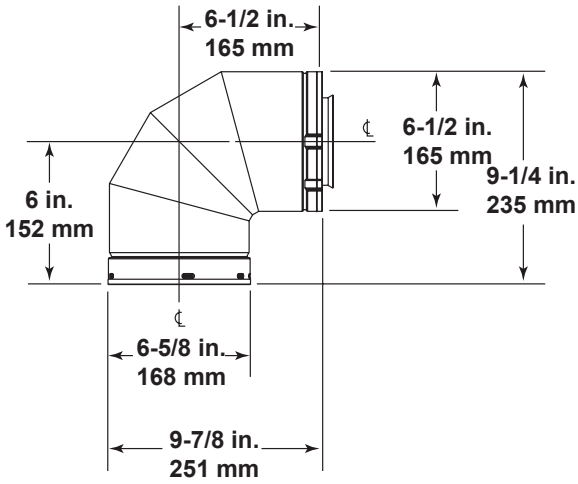

SLP90
90° Elbow

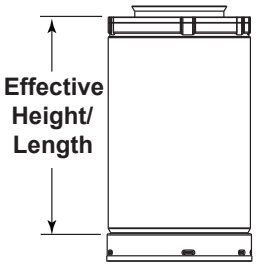

SLP PIPE

Effective Height/Length

Pipe	*inches*	*mm*
SLP4	4	102
SLP6	6	152
SLP12	12	305
SLP24	24	610
SLP36	36	914
SLP48	48	1219
SLP6A	2 - 6	51 - 152
SLP12A	2 - 12	51 - 305

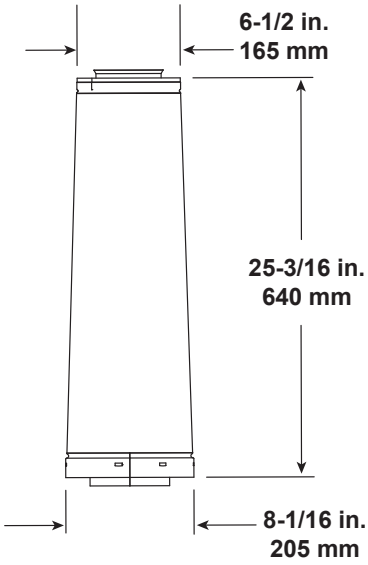

DVP-SLP24
Adapter

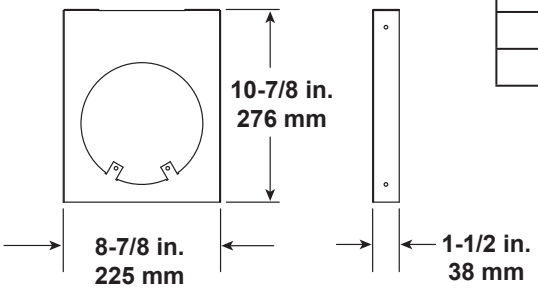

SLP-HVS
Horizontal Pipe
Support

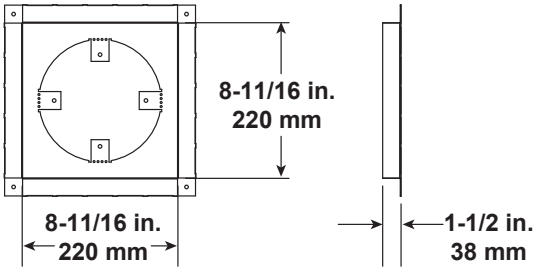

SLP-FS
Ceiling Firestop

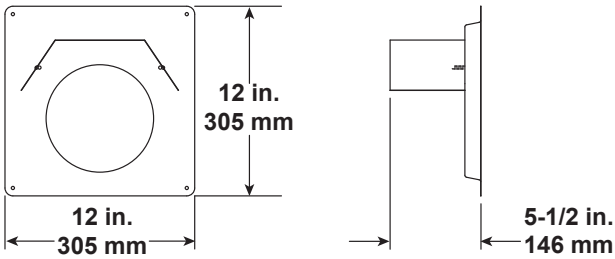

SLP-WS
Wall Shield Firestop

Figure 12.8 SLP Series Vent Components

A. Vent Components Diagrams *(continued)*

Note: Heat shields MUST overlap by a minimum of 1-1/2 in. (38 mm). The heat shield is designed to be used on a wall 4 in. to 7-1/4 in. (102 mm to 184 mm) thick. If wall thickness is less than 4 in. (102 mm) the existing heat shields must be field trimmed. If wall thickness is greater than 7-1/4 in. (184 mm) a DVP-HSM-B will be required.

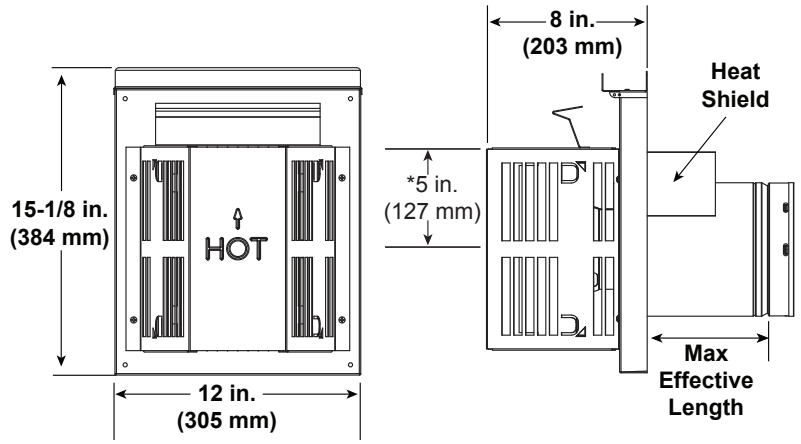

SLP-TRAP
Horizontal Termination Cap

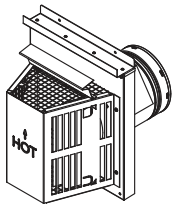

* Center of the horizontal vent pipe to the vertical measuring surface.

Term Cap	Minimum Effective Length	Maximum Effective Length
Trap1	3-1/8 in.	4-3/4 in.
	79 mm	121 mm
Trap2	5-1/4 in.	9-1/4 in.
	133 mm	235 mm

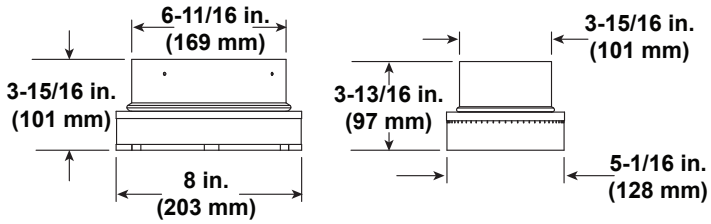

SL-2DVP
Adapter

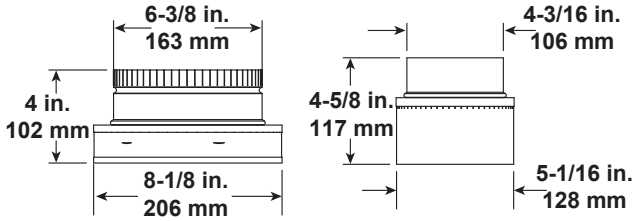

DVP-2SL
Adapter

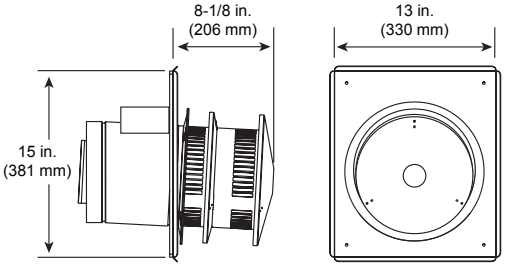

SLP-HRC-SS
Horizontal Termination Cap

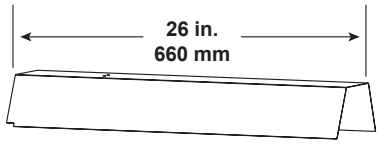

DVP-HSM-B
Extended Heat Shield

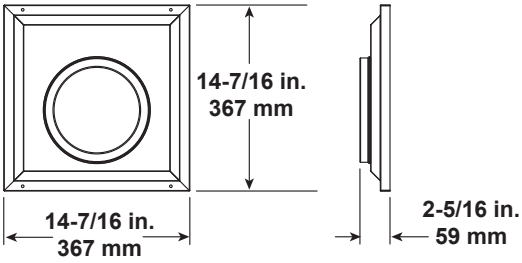

SLP-WT-BK
Wall Thimble-Black

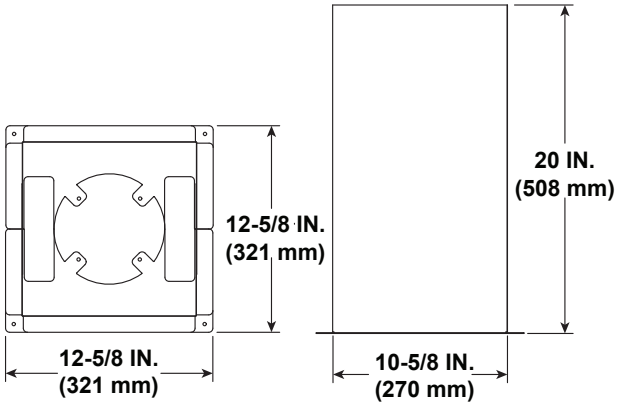

SLP-RDS
ROOF DECK INSULATION SHIELD

Figure 12.9 SLP Series Vent Components

A. Vent Components Diagrams *(continued)*

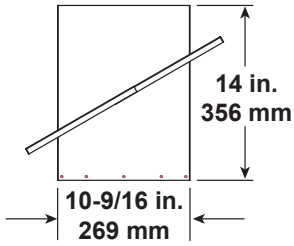

SLP-CCS-BK
Cathedral Ceiling
Support Box-Black

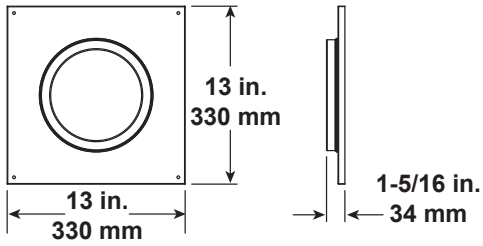

SLP-DCF-BK
Ceiling Firestop
Black

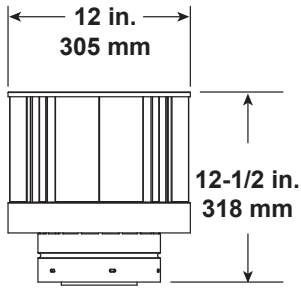

SLP-TVHW
Vertical
Termination Cap

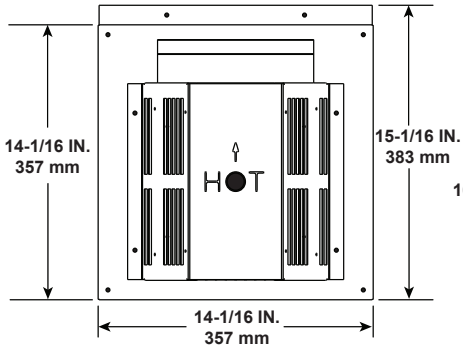

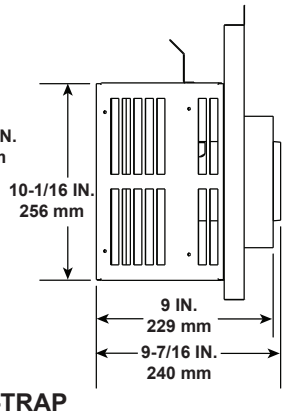

SLP-FLEX-TRAP
Horizontal
Termination Kit

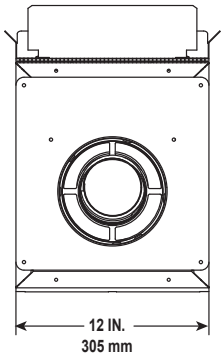

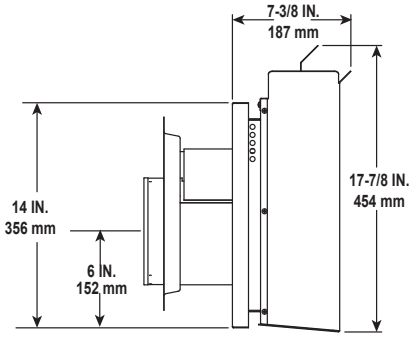

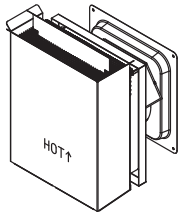

SLP-TB1
Basement Vent Cap

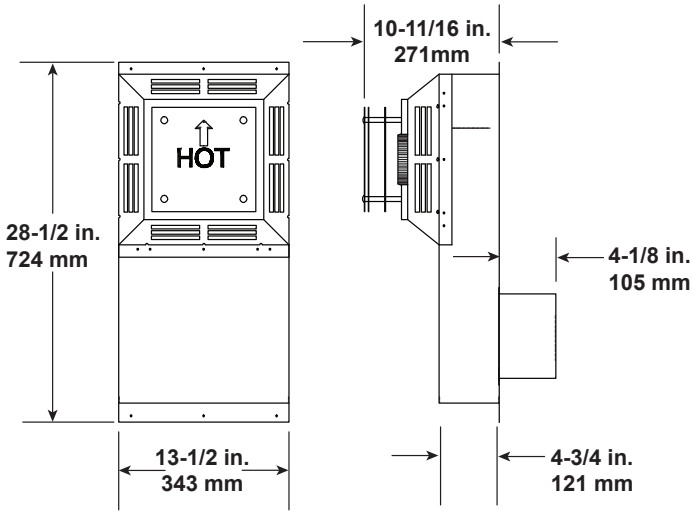

SLK-SNKD
Snorkel
Termination Cap

Figure 12.10 SLP Series Vent Components

A. Vent Components Diagrams *(continued)*

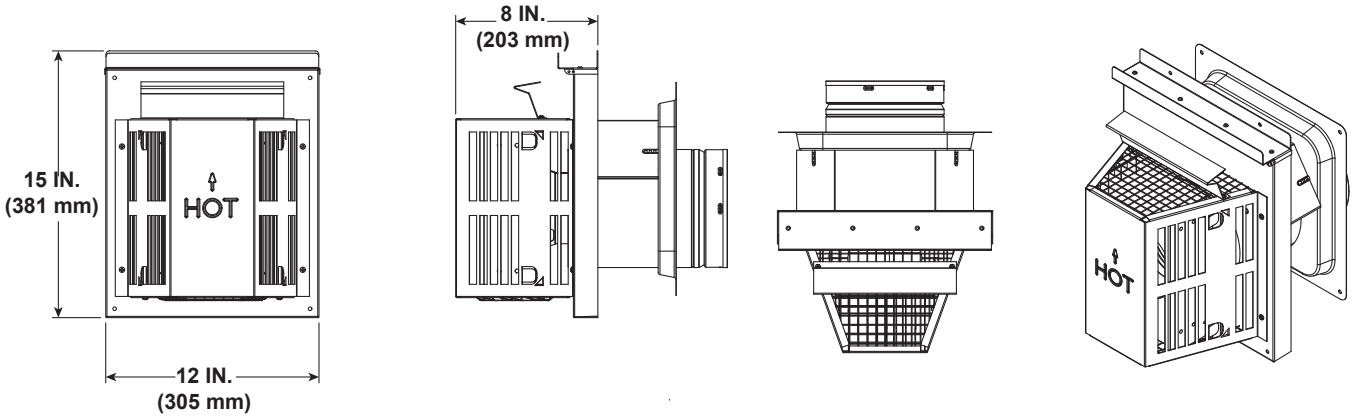

SLP-HHW2
Horizontal High Wind Termination Cap

Figure 12.11 SLP series Vent Components

B. Accessories

WARNING! Risk of Fire and Electric Shock! *Use ONLY Hearth & Home Technologies-approved optional accessories with this appliance. Using non-listed accessories could result in a safety hazard and will void the warranty.*

Contact your dealer for more information and details, such as color options, on individual accessories. A qualified service technician must install the approved accessories. Operate installed accessories according to the included instructions.

Note: Some optional accessories must be installed at the time of appliance installation. See Section 2.A.

Options:

Remote Controls, Wall Controls and Wall Switches	
IFT-RC150-HNG	IntelliFire Touch wireless wall switch
IFT-RC400	IntelliFire Touch remote control, docking station and auxiliary control module
IntelliFire Wi-Fi module with IntelliFire App	
IFT-WFM	
Refractory Kit	
LINER-36ST	Glass Liner Kit - See Through
LINER-36PIER	Glass Liner Kit - Pier
WTB36-ST	Weathered Brown Refractory Kit - See Through
WTB36-PR	Weathered Brown Refractory Kit - See Through
Fan	
GFK-160A	Fan Kit
Modern Conversion Kit	
STPR-MOD-KIT	Modern Conversion Kit

Hearth & Home Technologies
7571 215th Street West, Lakeville, MN 55044

Printed in U.S.A. - Copyright 2022