Form No. 3386-194 Rev C

Snow Cab Kit

Power Max® Snowthrowers

Model No. 127-5960

Installation Instructions

⚠ WARNING

Installing this snow cab onto a Power Max snowthrower without properly installing a counterweight to the front of the snowthrower can cause it to tip backward and fall on the operator, causing injury.

- **Do not operate a snowthrower with a snow cab that does not have the proper counterweight.**
- **Obtain and install a Toro weight kit (Part no. 107–3815) to the front of the snowthrower in order to balance the added weight of the snow cab.**

1

Installing the Snow Cab Frame on the Snowthrower

Parts needed for this procedure:

2	U-bracket
4	Washers
2	End caps
2	Bolt (1/4 x 1 inch)
6	Bolt (1/4 x 3/4 inch)
2	Bolt (1/4 x 1-3/4 inches)
10	Locknut (1/4 inch)
1	Top frame
1	Rear frame
1	Horizontal frame
1	Left mounting bracket
1	Right mounting bracket
2	Front posts

Procedure

1. Remove and retain the 2 upper handle nuts (1 on each side) from the snowthrower handle assembly.

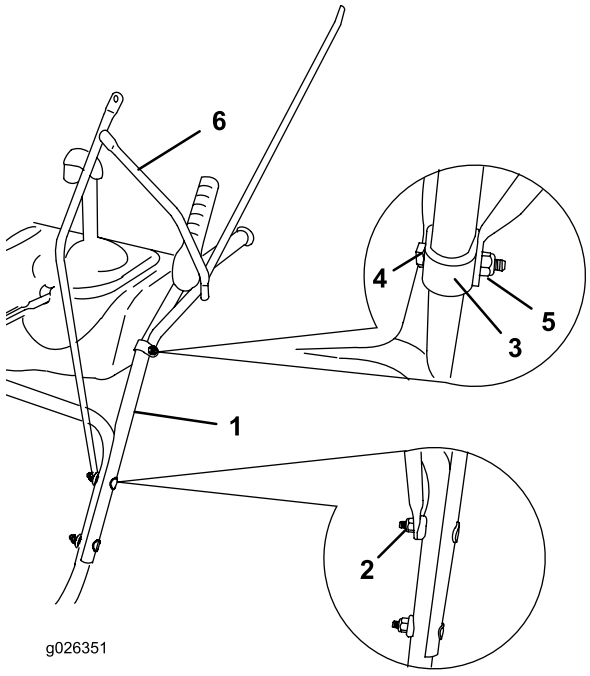

g026351

Figure 1

1. Handle assembly
2. Upper handle nut
3. U-bracket
4. Bolt (1/4 x 1-3/4 inch)
5. Locknut
6. Left mounting bracket

2. **For installation on Heavy Duty Two-Stage and Compact Two-Stage (with 4-inch spacing between the handle bolts) Snowthrowers only:** Install the lower front end of the left and right mounting brackets onto the handle assembly using the upper handle mounting nuts that were previously removed.

© 2024—The Toro® Company
8111 Lyndale Avenue South
Bloomington, MN 55420

Register at www.Toro.com.

Original Instructions (EN)
Printed in the USA.
All Rights Reserved

3386-194

3. **For installation on Compact Two-Stage Snowthrowers only:** Install the left and right spacing bracket, then install the lower front end of the left and right mounting brackets onto the handle assembly using the upper handle mounting nuts that were previously removed. Refer to the image below.

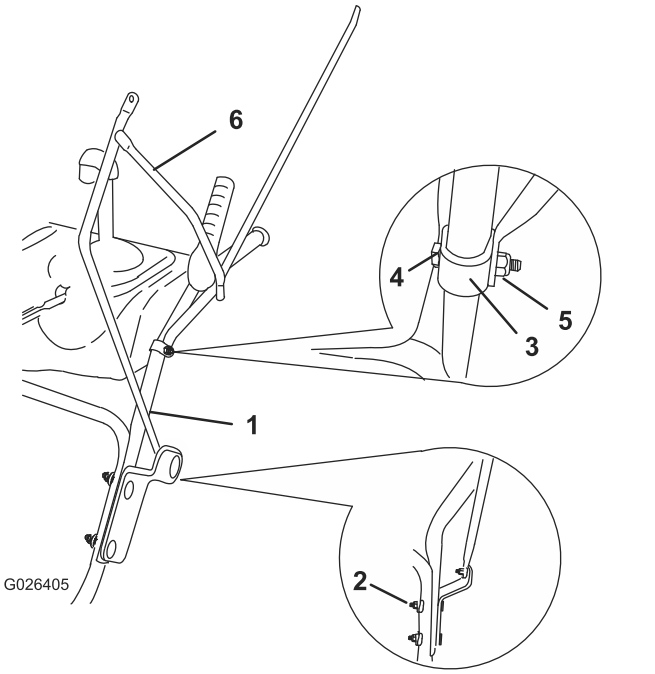

Figure 2

1. Handle assembly
2. Upper handle nut
3. U-bracket
4. Bolt (1/4 x 1-3/4 inches)
5. Locknut
6. Left mounting bracket

4. Install the other lower end of each mounting bracket onto the handle assembly using a U-bracket, bolt (1/4 x 1-3/4 inches), and locknut (Figure 1).

   Note: You may need to squeeze each U-bracket together slightly before installing it onto the handle assembly.

   Note: The ends of the U-brackets should face downward.

5. Position the horizontal frame inside the upper ends of the mounting brackets (Figure 3).

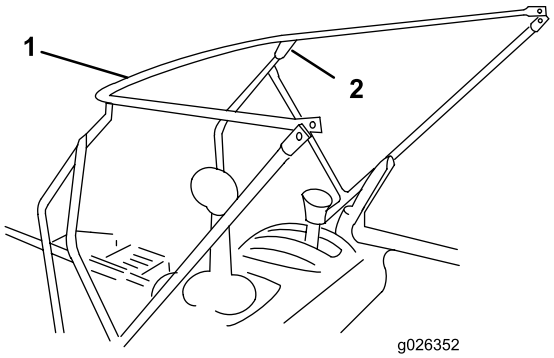

Figure 3

1. Horizontal frame
2. Upper end of mounting bracket

6. Align each of the 2 holes in the front corners and insert a bolt (1/4 x 3/4 inch) from the outside through each of the holes and install locknuts on the bolts until they are finger-tight.
7. Remove a locknut that you just installed on one of the front corners in 6, install the bottom (straight) end of a front post and a locknut onto the bolt, and tighten the locknut until the front post stays upright.

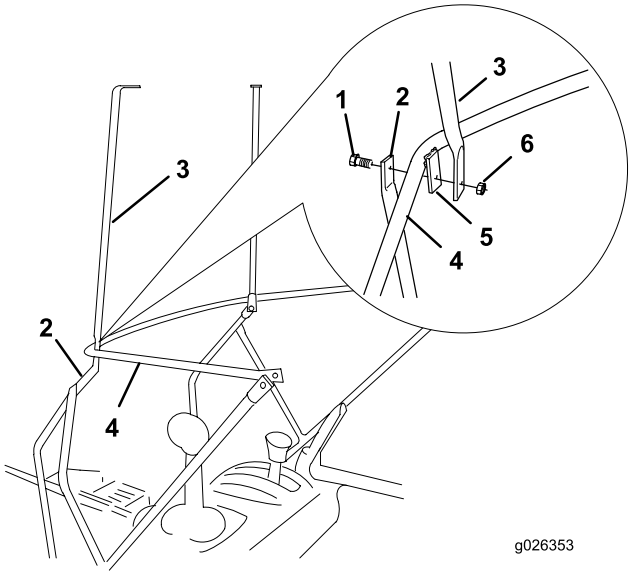

Figure 4

1. Bolt (1/4 x 3/4 inch)
2. Upper end of mounting bracket
3. Front post
4. Horizontal frame
5. Tab
6. Locknut

Note: The tabs at the top of the front post should face in toward the operating position.

8. Repeat 7 for the other front post.

9. For each side, align the holes in the frame ends in the rear, insert a bolt (with a washer) through the holes from the inside.

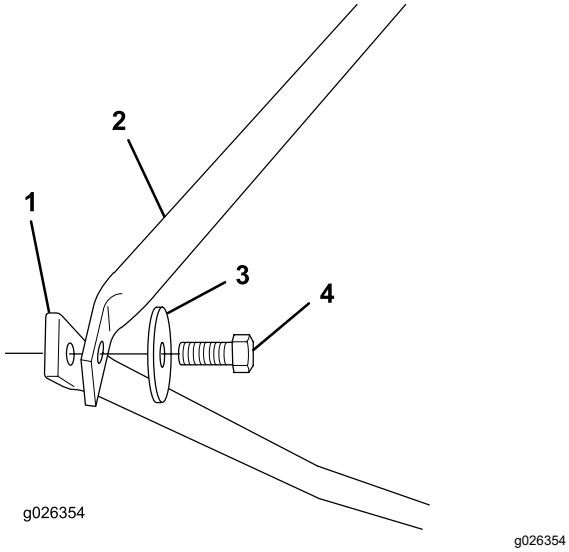

Figure 5

1. Mounting bracket end
2. Horizontal frame
3. Washer
4. Boltt (1/4 x 1 inch)

10. Position the rear frame with the top tabs facing forward and the bottom ends to the outside of the other frame ends.

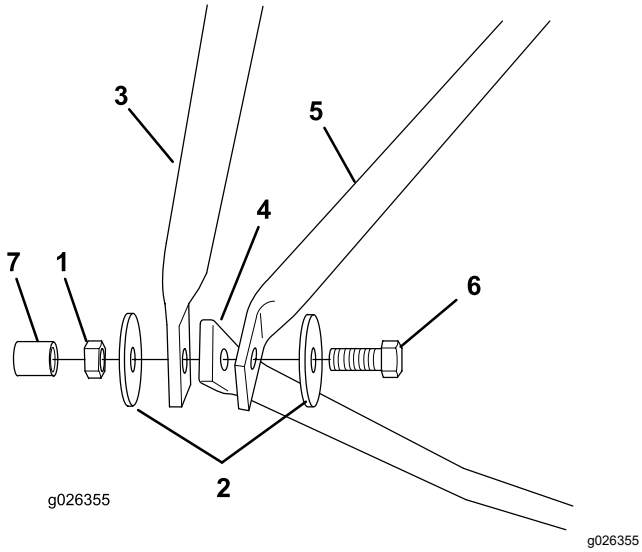

Figure 6

1. Locknut
2. Washers
3. Rear frame
4. Mounting bracket
5. Horizontal frame
6. Bolt (1/4 x 1 inch)
7. End cap

11. Install a washer and a locknut on each of the bolts and tighten each locknut until it is finger-tight.
12. Hold the rear frame upright and tighten the locknuts (Figure 6).

Note: Do not overtighten the locknuts, because you will need to adjust the frame assembly to install the top frame and the cover.

13. Attach the top frame to the front post using a bolt and a locknut.

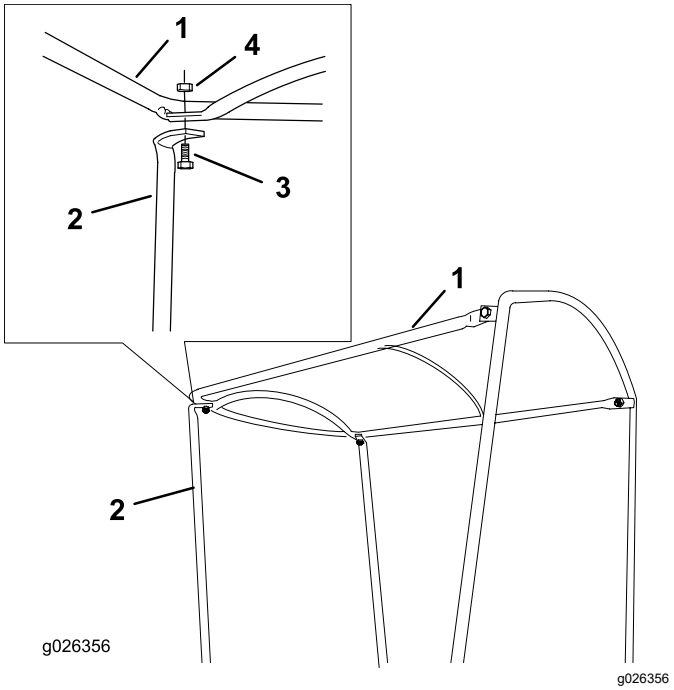

Figure 7

1. Top frame
2. Front post
3. Bolt (1/4 x 3/4 inch)
4. Locknut

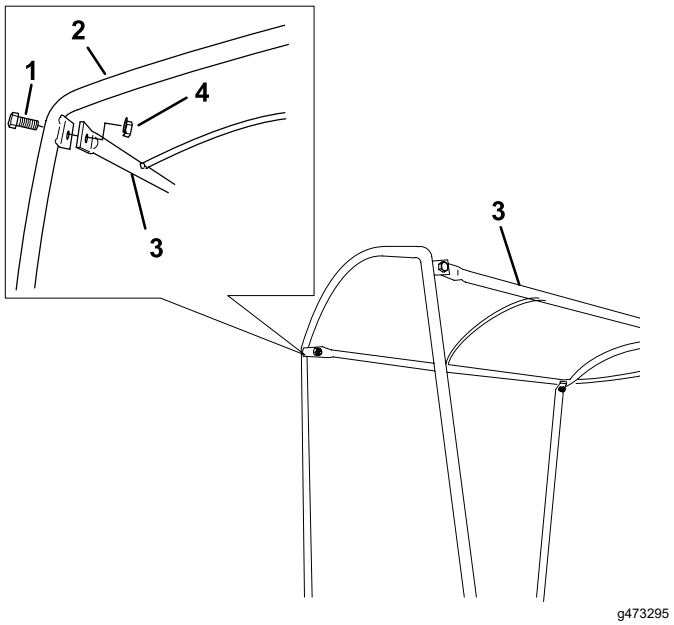

Figure 8

1. Bolt (1/4 x 3/4 inch)
2. Rear frame
3. Top frame
4. Locknut

14. From the operating position, move the entire frame assembly forward until the rear frame is at a 90° angle to the horizontal frame.

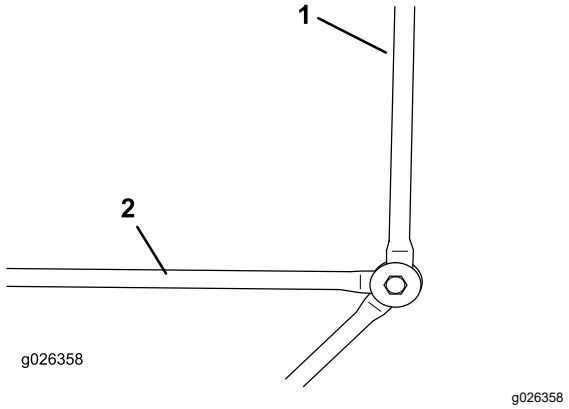

Figure 9

1. Rear frame
2. Horizontal frame

15. Tighten all fasteners securely and insert the end caps on the bolt ends that extend from the washers.

2

Installing the Headlight Extension Bar

Parts needed for this procedure:

1	Carriage bolt (5/16 x 3/4 inch)
1	Headlight extension bar
1	Flange locknut (5/16 inch)

Procedure

If your snowthrower has a headlight, you will need to move the headlight.

1. Loosen the nuts that hold the headlight bracket onto the right side of the handle.

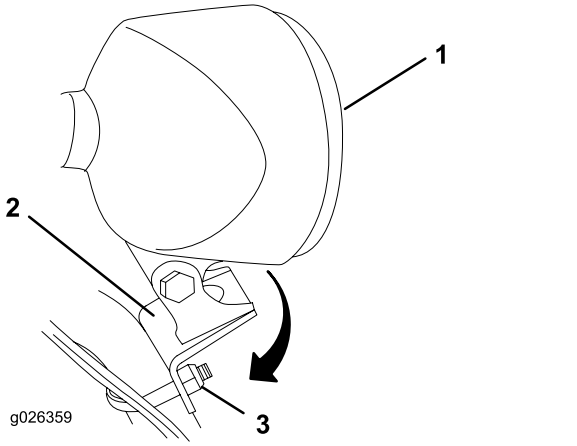

g026359

Figure 10

1. Headlight
2. Bracket
3. Nut (2)

2. Rotate the headlight bracket to the right 90° and tighten the nuts.
3. Install the headlight extension bar with a bolt (5/16 x 3/4 inch) and a flange locknut (5/16 inch) and secure the headlight to the bar (Figure 11).

   Model 37777 only: Rotate and move the light bracket to the upper handle of the snowthrower. Replace the current wire harness with wire harness part 106-4511.

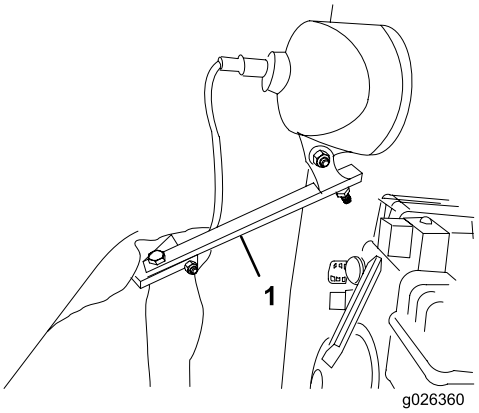

g026360

Figure 11

1. Headlight extension bar (shown with cover)

3

Installing the Cover

Parts needed for this procedure:

	Cover

Procedure

Unfold and install the cover over the frame. Secure it to the frame using the Velcro® brand hook-and-loop fastener tabs.

Note: The front of the snow cab should be slightly forward from vertical when the snowthrower is not in use.

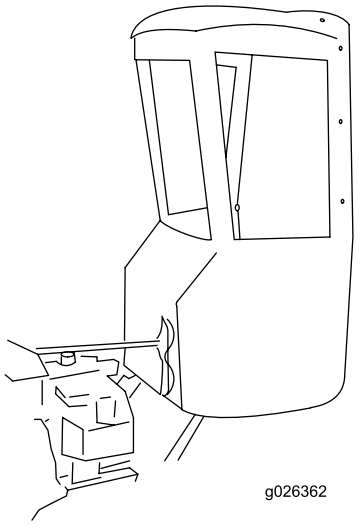

g026362

Figure 12

Notes:

Notes:



Count on it.