Form No. 3445-256 Rev C

TORO

Count on it.

Operator's Manual

Revolution® 60V String Trimmer

Model No. 66110T—Serial No. 323000001 and Up

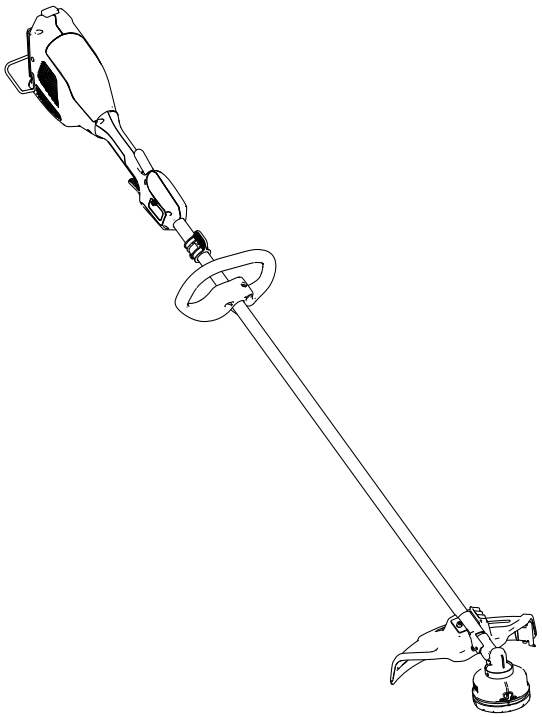

Register at www.Toro.com.
Original Instructions (EN)

3445-256



For assistance, please see www.Toro.com/support for instructional videos or contact 1-888-384-9939 before returning this product.

⚠ WARNING

CALIFORNIA
Proposition 65 Warning

The power cord on this product contains lead, a chemical known to the State of California to cause birth defects or other reproductive harm. Wash hands after handling.

Use of this product may cause exposure to chemicals known to the State of California to cause cancer, birth defects, or other reproductive harm.

Introduction

This trimmer is intended to be used by homeowners and professional operators. It is designed to trim grass as needed outdoors. It is designed to use Flex-Force Power System® 60V lithium-ion battery packs. These battery packs are designed to be charged only by Flex-Force 60V lithium-ion battery chargers. Using this product for purposes other than its intended use could prove dangerous to you and bystanders.

Model 66110T does not include a battery or a charger.

Read this information carefully to learn how to operate and maintain your product properly and to avoid injury and product damage. You are responsible for operating the product properly and safely.

Visit www.Toro.com for product safety and operation training materials, accessory information, help finding a dealer, or to register your product.

© 2024—The Toro® Company
8111 Lyndale Avenue South
Bloomington, MN 55420

Register at www.Toro.com.

Original Instructions (EN)
Printed in China
All Rights Reserved



M

Whenever you need service, genuine the manufacturer parts, or additional information, contact an Authorized Service Dealer or the manufacturer Customer Service and have the model and serial numbers of your product ready. Figure 1 identifies the location of the model and serial numbers on the product. Write the numbers in the space provided.

Important: **With your mobile device, you can scan the QR code on the serial number decal (if equipped) to access warranty, parts, and other product information.**

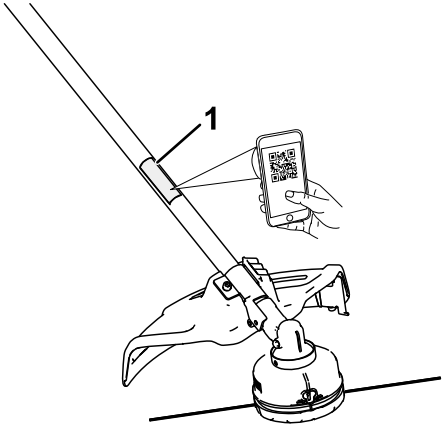

g366989

Figure 1

1. Model number, serial number, and QR code location

Model No. _____

Serial No. _____

Safety-Alert Symbol

The safety-alert symbol (Figure 2) shown in this manual and on the machine identifies important safety messages that you must follow to prevent accidents.



g000502

Figure 2

Safety-alert symbol

The safety-alert symbol appears above information that alerts you to unsafe actions or situations and is followed by the word **DANGER**, **WARNING**, or **CAUTION**.

DANGER indicates an imminently hazardous situation which, if not avoided, **will** result in death or serious injury.

WARNING indicates a potentially hazardous situation which, if not avoided, **could** result in death or serious injury.

CAUTION indicates a potentially hazardous situation which, if not avoided, **may** result in minor or moderate injury.

This manual uses two other words to highlight information. **Important** calls attention to special mechanical information and **Note** emphasizes general information worthy of special attention.

Safety

WARNING—When using electric gardening tools, always read and follow basic safety warnings and instructions to reduce the risk of fire, electric shock, and personal injury, including the following:

IMPORTANT SAFETY INSTRUCTIONS

I. Training

1. The operator of the tool is responsible for any accidents or hazards occurring to others or their property.
2. Do not allow children to use or play with the tool, battery pack, or the battery charger; local regulations may restrict the age of the operator.

3. Do not allow children or untrained people to operate or service this device. Allow only people who are responsible, trained, familiar with the instructions, and physically capable to operate or service the device.
4. Before using the tool, battery pack, and battery charger, read all the instructions and cautionary markings on these products.
5. Become familiar with the controls and proper use of the tool, battery pack, and battery charger.

II. Preparation

1. Keep bystanders and children away from the operating area.
2. Use only the battery pack specified by Toro. Using other accessories and attachments may increase the risk of injury and fire.
3. Plugging the battery charger into an outlet that is not 120 V can cause a fire or electric shock. Do not plug the battery charger into an outlet other than 120 V. For a different style of connection, use an attachment plug adapter of the proper configuration for the power outlet if needed.
4. Do not use a damaged or modified battery pack or battery charger, which may exhibit unpredictable behavior that results in fire, explosion, or risk of injury.
5. If the supply cord to the battery charger is damaged, contact an Authorized Service Dealer to replace it.
6. Charge the battery pack with only the battery charger specified by Toro. A charger suitable for 1 type of battery pack may create a risk of fire when used with another battery pack.
7. Charge the battery pack in a well-ventilated area only.
8. Follow all charging instructions and do not charge the battery pack outside of the temperature range specified in the instructions. Otherwise, you may damage the battery pack and increase the risk of fire.
9. Do not operate the tool without all guards and other safety protective devices in place and functioning properly on the tool.
10. Dress properly—Wear appropriate clothing, including eye protection; long pants; substantial, slip-resistant footwear; rubber gloves; and hearing protection. Tie back long hair and do not wear loose clothing or loose jewelry that can get caught in moving parts. Wear a dust mask in dusty operating conditions.

III. Operation

1. Avoid dangerous environments—Do not use the tool in rain or in damp or wet locations.
2. Use the proper tool for your application—Using the tool for purposes other an its intended use could prove dangerous to you and bystanders.
3. Prevent unintentional starting—Ensure that the switch is in the OFF position before connecting to the battery pack and handling the tool. Do not carry the tool with your finger on the switch or energize the tool with the switch in the ON position.
4. Operate the tool only in daylight or good artificial light.
5. If the tool strikes an object or starts to vibrate, immediately shut off the tool, wait for all moving parts to stop, and disconnect the battery before examining the tool for damage. Make all necessary repairs before resuming operation.
6. Remove the battery pack from the tool before adjusting it or changing accessories.
7. Keep your hands and feet away from the cutting area and all moving parts.
8. Shut off the tool, remove the battery pack from the tool, and wait for all movement to stop before adjusting, servicing, cleaning, or storing the tool.
9. Remove the battery pack from the tool whenever you leave it unattended.
10. Do not force the power tool. Use the correct power tool for your application. The correct power tool will do the job better and safer at the rate for which it was designed.
11. Do not overreach—Keep proper footing and balance at all times, especially on slopes. Walk, never run with the tool.
12. Stay alert—Watch what you are doing and use common sense when operating the tool. Do not use the tool while ill, tired, or under the influence of alcohol or drugs.
13. Ensure that the ventilation openings are kept clear of debris.
14. Under abusive conditions, the battery pack may eject liquid; avoid contact. If you accidently come into contact with the liquid, flush with water. If the liquid contacts your eyes, seek medical help. Liquid ejected from the battery pack may cause irritation or burns.
15. Do not expose a battery pack or tool to fire or excessive temperature. Exposure to fire or temperature above 130°C (265°F) may cause explosion.

16. CAUTION—A mistreated battery pack may present a risk of fire, explosion, or chemical burn.
    - Do not disassemble the battery pack.
    - Replace the battery pack with a genuine Flex-Force battery pack only; using another type of battery pack may cause a fire or risk of injury.
    - Keep battery packs out of the reach of children and in the original packaging until you are ready to use them.

IV. Maintenance and Storage

1. Maintain the tool with care—Keep it clean and in good repair for best performance and to reduce the risk of injury. Follow the instructions for lubricating and changing accessories. Keep handles dry, clean, and free from oil and grease.
2. When the battery pack is not in use, keep it away from metal objects such as paper clips, coins, keys, nails, and screws that can make a connection from 1 terminal to another. Shorting the battery terminals may cause burns or a fire.
3. Keep your hands and feet away from moving parts.
4. Shut off the tool, remove the battery pack from the tool, and wait for all movement to stop before adjusting, servicing, cleaning, or storing the tool.
5. Check the tool for damaged parts—If there are damaged guards or other parts, determine whether it will operate properly. Check for misaligned and binding moving parts, broken parts, mounting, and any other condition that may affect its operation. Unless indicated in the instructions, have an Authorized Service Dealer repair or replace a damaged guard or part.
6. Do not replace the existing non-metallic cutting means on the tool with a metallic cutting means.
7. Do not attempt to service or repair the tool, battery pack, or battery charger except as indicated in the instructions. Have an Authorized Service Dealer perform service using identical replacement parts to ensure that the product is safely maintained.
8. Store an idle tool indoors in a place that is dry, secure, and out of the reach of children.

SAVE THESE INSTRUCTIONS

Safety and Instructional Decals

Safety decals and instructions are easily visible to the operator and are located near any area of potential danger. Replace any decal that is damaged or missing.



decal145-3810

145-3810



decal139-5210

139-5210

1. Warning—read the *Operator's Manual*; stay away from moving parts; keep all guards in place; wear eye protection; do not operate in wet conditions.

Setup

Loose Parts

Use the chart below to verify that all parts have been shipped.

Procedure	Description	Qty.	Use
1	Auxiliary handle assembly	1	Install the auxiliary handle.
2	Guard Socket-head screw	1 1	Install the guard.
3	No parts required	–	Install the harness.

Media and Additional Parts

Description	Qty.	Use
Allen key	1	Install the guard and handle.
Metal securing rod	1	Secure the trimmer head from rotation for removal when servicing.

1

Installing the Auxiliary Handle

Parts needed for this procedure:

1	Auxiliary handle assembly

Procedure

1. Separate the auxiliary handle from the lower handle bracket by unscrewing the handle-lock knob and removing the socket head bolt (A of Figure 3).

   Important: **The bolt may be wedged into the plastic of the handle; lightly tap the bottom of the bolt until it is free from the handle.**

2. Align the auxiliary handle with the lower handle bracket on the trimmer handle (B of Figure 3).
3. Slide the lower handle bracket into the slot on the auxiliary handle (B of Figure 3).
4. Secure the auxiliary handle to the lower handle bracket with the socket head bolt previously removed (C of Figure 3).

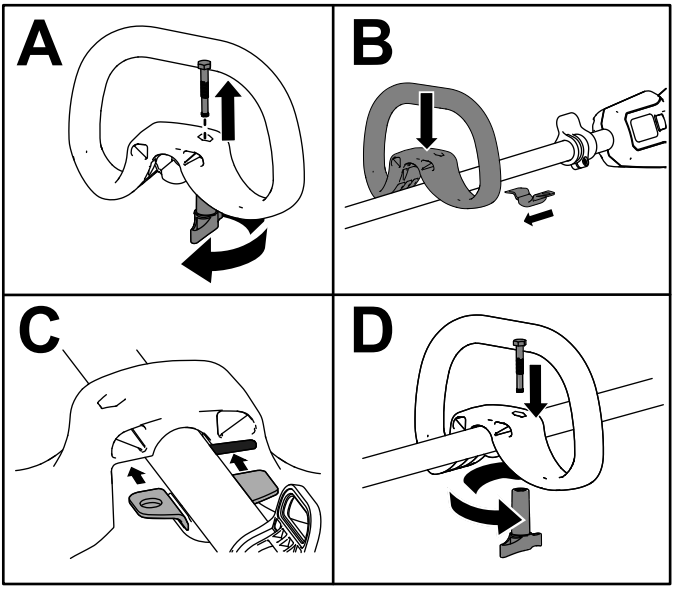

g524213

Figure 3

2

Installing the Guard

Parts needed for this procedure:

1	Guard
1	Socket-head screw

Procedure

1. Align the guard so that the tab on the mount slides into the slot (A of Figure 4).
2. Install and tighten the socket-head screw to secure the guard to the mount (B of Figure 4).

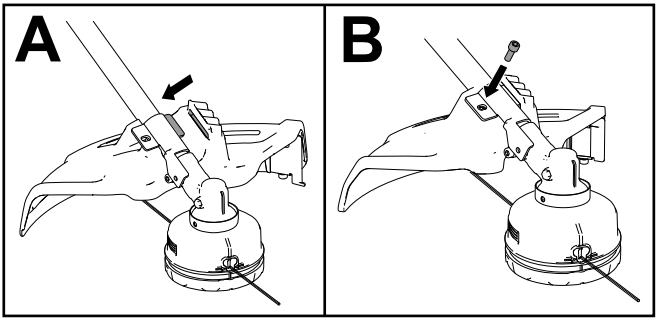

g525388

Figure 4

3

Installing the Harness

No Parts Required

Procedure

Important: **If you are using the string trimmer with a 6.0 Ah or greater battery pack installed, install the included shoulder harness.**

Do not use the shoulder harness if you are powering the string trimmer with the backpack and backpack tether; use only the backpack harness.

Connect the metal hook on the shoulder harness to the strap collar on the trimmer handle (Figure 5).

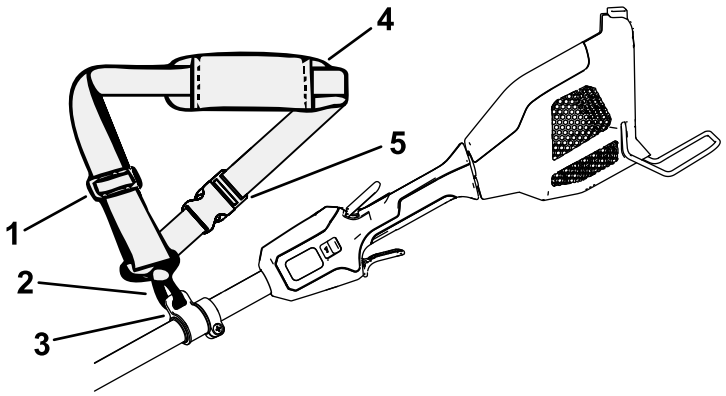

g367303

Figure 5

1. Strap adjuster
2. Metal strap hook
3. Strap collar
4. Shoulder strap
5. Quick-release buckle

The strap length is adjustable; slide the strap adjuster up to decrease the length of the strap, or down to increase the length of the strap (Figure 5).

If there you ever need to rapidly remove the harness, disconnect the quick-release buckle as follows:

1. Press in on the sides of the buckle (A of Figure 6).
2. Allow the buckle to disconnect (B of Figure 6).

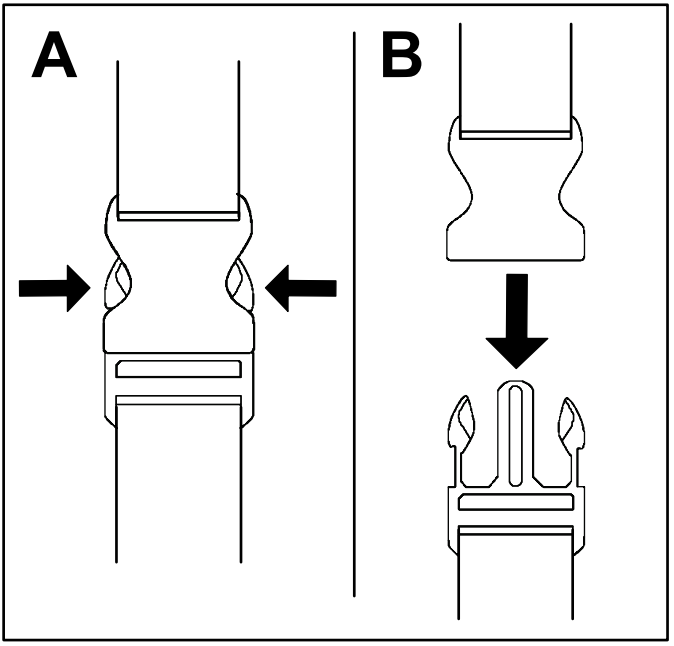

g340477

Figure 6

Product Overview

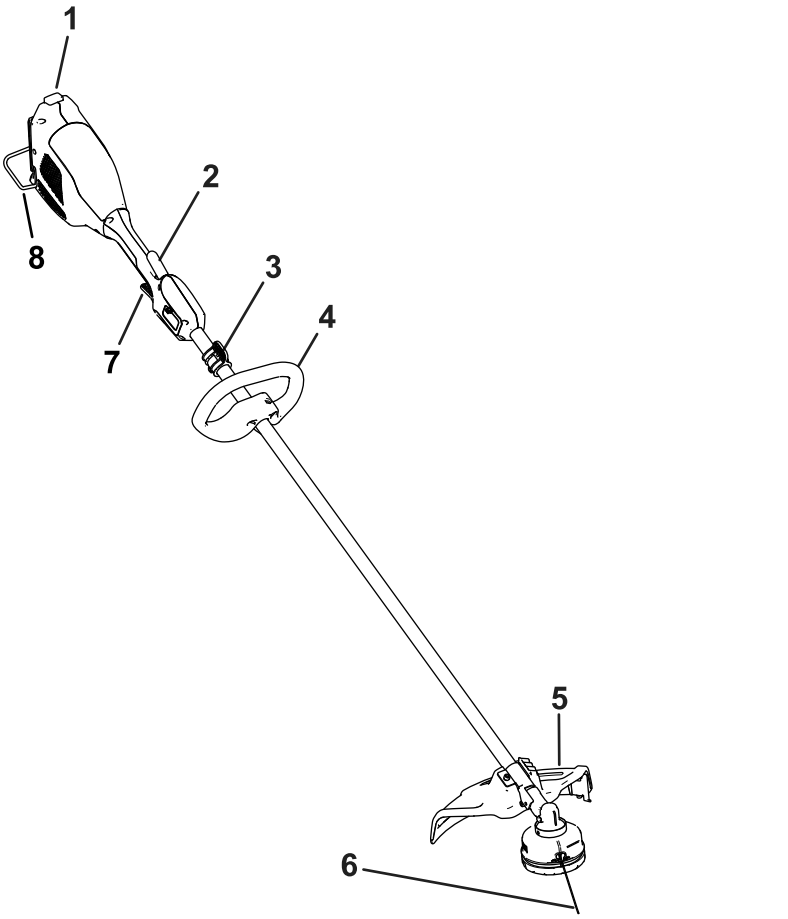

Figure 7

1. Battery latch
2. Lockout trigger
3. Harness connection
4. Auxiliary handle
5. Deflector shield and line cutoff blade
6. Line
7. Run trigger
8. Rod guard

Specifications

Model	66110T
Rated Voltage	60V DC maximum, 54 VDC nominal
Overall Length	179.0 cm (70-1/2 inches)
Weight (without battery)	4.5 kg (10.1 lbs)
Cutting Width	40.6 cm (16 inches)
Charger Type	Flex-Force 60V lithium-ion chargers
Battery Type	Flex-Force 60V lithium-ion batteries

Appropriate Temperature Ranges

Charge/store the battery pack at	5°C (41°F) to 40°C (104°F)*
Use the battery pack at	-30°C (-22°F) to 49°C (120°F)
Use the tool at	0°C (32°F) to 49°C (120°F)

*Charging time will increase if you do not charge the battery within this range.

Store the tool, battery pack, and battery charger in an enclosed clean, dry area.

Attachments/Accessories

A selection of Toro approved attachments and accessories is available for use with the machine to enhance and expand its capabilities. Contact your Authorized Service Dealer or authorized Toro distributor or go to www.Toro.com for a list of all approved attachments and accessories.

To ensure optimum performance and continued safety certification of the machine, use only genuine Toro replacement parts and accessories. Replacement parts and accessories made by other manufacturers could be dangerous.

Operation

Starting the Trimmer

1. Ensure that the vents on the trimmer are clear of any dust and debris.
2. Ensure that the rod guard is lowered and align the cavity in the battery pack with the tongue on the handle housing (Figure 8).
3. Push the battery pack into the handle until the battery locks into the latch (Figure 8).

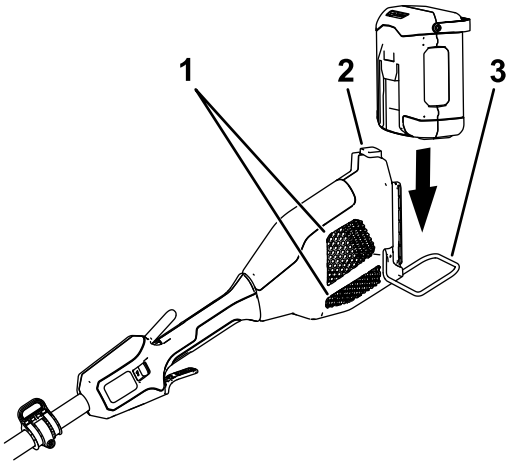

g356928

Figure 8

1. Trimmer vents
2. Battery latch button
3. Rod guard

4. To start the trimmer, squeeze the lockout trigger, then squeeze the run trigger (Figure 9).

   Note: Slide the two-speed switch to change the speed of the trimmer.

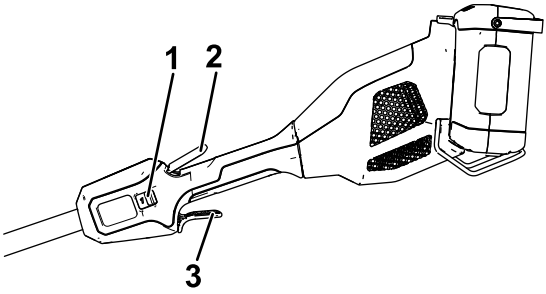

g356929

Figure 9

1. Two-speed switch
2. Lockout trigger
3. Run trigger

Shutting Off the Trimmer

To shut off the trimmer, release both triggers.

Whenever you are not using the trimmer or are transporting the trimmer to or from the work area, remove the battery pack.

Removing the Battery Pack from the Trimmer

Press the battery latch button on the trimmer to release the battery pack, then slide the battery pack out of the trimmer (Figure 10).

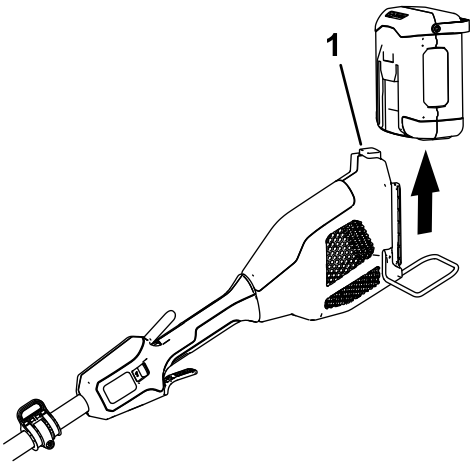

g356930

Figure 10

1. Battery latch

Advancing the Line Using the Bump Feed

1. Run the tool at full throttle.
2. Tap the bump head on the ground to advance the line. The line advances each time the bump head is tapped.

   Note: Do not hold the bump head on the ground while running the trimmer.

   Note: The line trimming cut-off blade on the grass deflector cuts the line to the correct length.

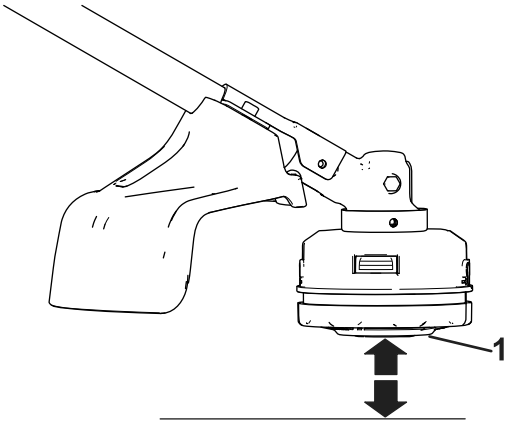

g367080

Figure 11

1. Bump head

Note: If the line is worn too short, you may not be able to advance the line by tapping it on the ground. If so, release both triggers and refer to Advancing the Line Manually (page 18).

Advancing the Line Manually

Remove the battery pack from the trimmer, then push the bump head while pulling on the trimmer line to manually advance the line (Figure 11).

If pushing the bump head does not advance the line it may be jammed. Remove the bump head cover by pushing in on the tabs on either side of the bump head, remove any debris or tangled line, then snap the bump head cover back into place (Figure 12).

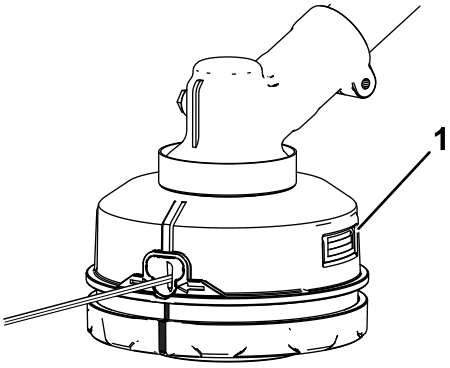

g386222

Figure 12

Some parts not shown for clarity

1. Push in on the tabs to access the line directly.

Operating Tips

- Keep the trimmer tilted toward the area being cut; this is the best cutting position.
- The string trimmer cuts when you move it from left to right; this helps prevent the trimmer from throwing debris at you.
- Use the tip of the line to do the cutting; do not force the trimmer head into uncut grass.
- Wire and picket fences, stone and brick walls, curbs, and wood can cause the line to wear rapidly and break.
- Avoid trees and shrubs; the line can easily damage tree bark, wood moldings, siding, fence posts, and other soft materials.

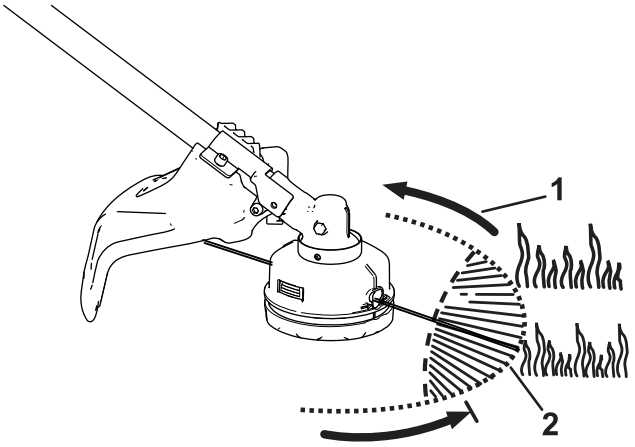

g367082

Figure 13

1. Direction of rotation
2. Line path

Maintenance

After each use of the trimmer, complete the following:

1. Remove the battery pack from the trimmer.
2. Wipe the trimmer clean with a damp cloth. Do not hose the trimmer down or submerge it in water.

   ⚠ CAUTION

   The line cutoff blade on the deflector is sharp and can cut you.

   Do not use your hands to clean the deflector shield and blade.

3. Wipe or scrape clean the cutting head area any time there is an accumulation of debris.
4. Inspect the machine, check and tighten all fasteners. If any part is damaged or lost, repair or replace it.
5. Brush debris away from air intake vents and exhaust on motor housing to prevent the motor from overheating.

Replacing the Line

Use only 2.4 mm (0.095 inch) diameter monofilament line.

1. Remove the battery pack.
2. Remove any existing line on the spool by repetitively pressing the bump head while pulling the line out equally from both sides of the bump head.
3. Using 2.4 mm (0.095 inch) line, cut a piece of line that is no longer than 7.3 m (24 ft).

   Important: **Do not overload the spool.**

   Important: **Do not use any other gauge or type of line, as this could damage the trimmer.**
4. Press and turn the bottom of the trimmer head in the direction shown by the arrows (clockwise) on the bottom of the bump head until the bottom green marks align with the green marks beneath the eyelets (Figure 14).
5. Insert 1 end of the line straight into the eyelet and push the line through until it comes out through the eyelet on the other side.

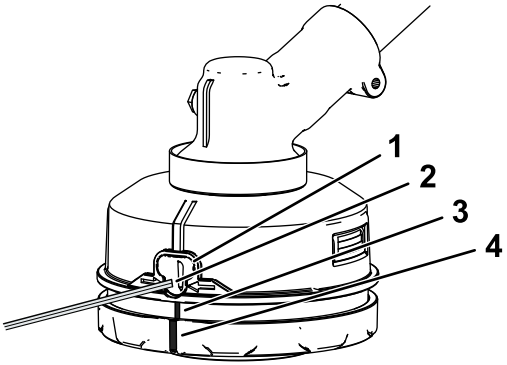

g367291

Figure 14

1. Eyelet
2. Line
3. Eyelet alignment mark
4. Bottom alignment mark

Important: **Do not disassemble the trimmer head.**

6. Pull the line through the eyelets until there is an equal length of line on each side of the trimmer head.
7. Hold the string trimmer in place with one hand. With your other hand, turn the bottom of the trimmer head in the direction shown by

the arrows (clockwise) on the bottom of the bump head to wind the line; leave about 152 mm (6 inches) extending beyond the eyelet on each side.

Replacing the Trimmer Head

1. Remove the battery pack from the trimmer.
2. Align the hole in the cup plate with the hole in the trimmer gearcase (Figure 15).
3. Insert the included metal rod through the cup plate and into the hole in the trimmer gearcase to secure the trimmer head (Figure 15).

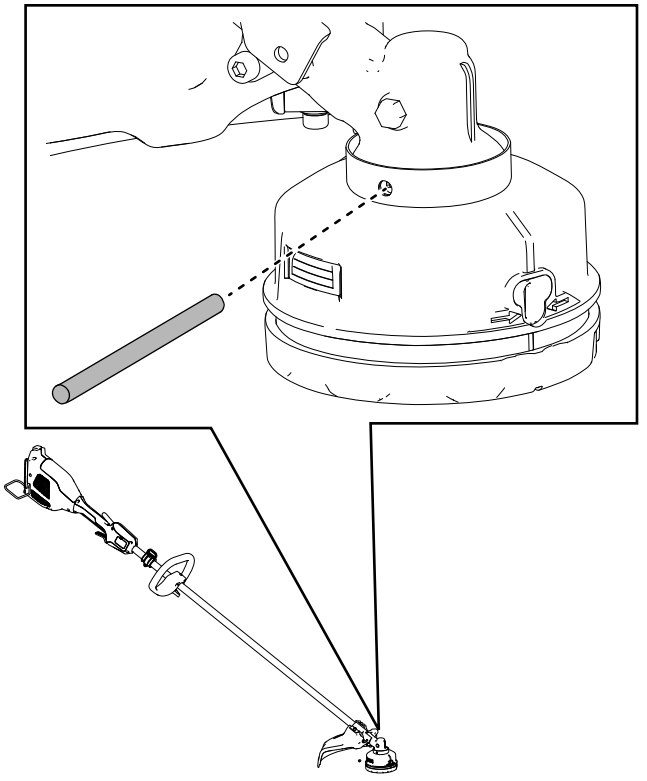

g378077

Figure 15

Some parts not shown for clarity

4. With the metal rod securing the trimmer head, rotate the trimmer head clockwise to remove it from the threaded gearcase post (Figure 16).

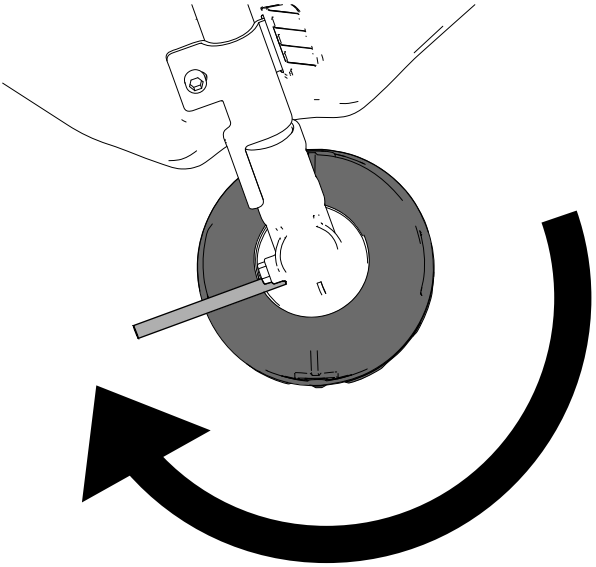

g378078

Figure 16

Some parts not shown for clarity

5. To install the new trimmer head, rotate it counterclockwise onto the gearcase post while securing the cup plate using the metal rod.

Lubricating the Gearbox

Service Interval: Every 25 hours or monthly, whichever comes first

1. Shut off the trimmer, remove the battery pack, and clean any debris from the trimmer head.
2. Set the trimmer so the gearbox is upright.
3. Remove the plug from the side of the trimmer (Figure 16).

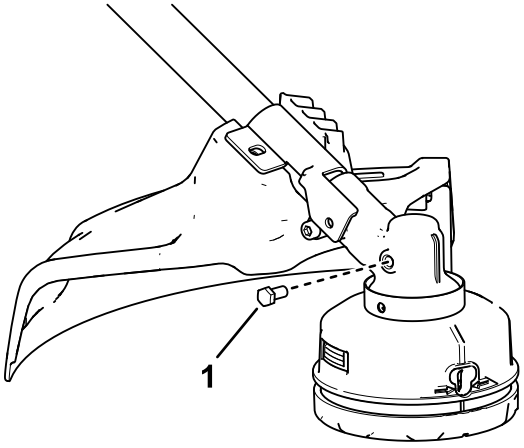

g525389

Figure 17

1. Gearbox plug

4. Apply a small amount of grease into the gearbox using a grease gun.

   Note: Use No. 2 lithium grease.
5. Install the gearbox plug.

Storage

Important: **Store the tool, battery pack, and charger only in temperatures that are within the appropriate range; refer to** **Specifications (page 15)****.**

Important: **If you are storing the battery pack for the off-season, charge it until 1 or 2 LED indicators turn green on the battery. Do not store a fully charged or fully depleted battery. When you are ready to use the tool again, charge the battery pack until the left indicator light turns green on the charger or all 4 LED indicators turn green on the battery.**

- Disconnect the product from the power supply (i.e., remove the plug from the power supply or the battery pack) and check for damage after use.
- Do not store the tool with the battery pack installed.
- Clean all foreign material from the product.
- When not in use, store the tool, battery pack, and battery charger out of the reach of children.
- Keep the tool, battery pack, and battery charger away from corrosive agents, such as garden chemicals and de-icing salts.
- To reduce the risk of serious personal injury, do not store the battery pack outside or in vehicles.
- Store the tool, battery pack, and battery charger in an enclosed clean, dry area.

Troubleshooting

Perform only the steps described in these instructions. All further inspection, maintenance, and repair work must be performed by an authorized service center or a similarly qualified specialist if you cannot solve the problem yourself.

Always remove the battery from the tool when troubleshooting, inspecting, maintaining, or cleaning the tool.

Problem	Possible Cause	Corrective Action
The tool does not run or does not run continuously.	1. The battery is not fully installed in the tool.	1. Remove and then replace the battery into the tool, making sure that it is fully installed and latched.
	2. The battery pack is not charged.	2. Remove the battery pack from the tool and charge it.
	3. The battery pack is over or under the appropriate temperature range.	3. Move the battery pack to a place where it is dry and the temperature is between 5°C (41°F) and 40°C (104°F).
	4. There is moisture on the leads of the battery pack.	4. Allow the battery pack to dry or wipe it dry.
	5. The battery pack is damaged.	5. Replace the battery pack.
	6. There is another electrical problem with the tool.	6. Contact an Authorized Service Dealer.
The tool does not reach full power or the gearbox is getting hot.	1. The battery pack charge capacity is too low.	1. Remove the battery pack from the tool and fully charge the battery pack.
	2. The air vents are blocked.	2. Clean the air vents.
	3. The gearbox is not being lubricated properly.	3. Lubricate the gearbox.

Problem	Possible Cause	Corrective Action
The tool is producing excessive vibration or noise.	1. The gearbox is not being lubricated properly. 2. There is debris under the grass shield or in the bump head housing on the trimmer. 3. The spool is not properly wound.	1. Lubricate the gearbox. 2. Clean any debris from under the grass shield or in the bump head housing. 3. Advance the line using the bump head and/or remove the line on the spool and wind the spool again.
The bump head does not advance the line.	1. The trimmer is out of line. 2. The line is tangled in the bump head housing. 3. There is debris under the grass shield or in the bump head housing on the trimmer.	1. Add more line to the bump head. 2. Remove the bump head cover and untangle the line. 3. Clean any debris from under the grass shield or in the bump head housing.
The battery pack loses charge quickly.	1. The battery pack is over or under the appropriate temperature range. 2. The trimmer is overloaded.	1. Move the battery pack to a place where it is dry and the temperature is between 5°C (41°F) and 40°C (104°F). 2. Trim at a slower pace.

Notes:

Notes:

California Proposition 65 Warning Information

What is this warning?

You may see a product for sale that has a warning label like the following:



WARNING: Cancer and Reproductive Harm—www.p65Warnings.ca.gov.

What is Prop 65?

Prop 65 applies to any company operating in California, selling products in California, or manufacturing products that may be sold in or brought into California. It mandates that the Governor of California maintain and publish a list of chemicals known to cause cancer, birth defects, and/or other reproductive harm. The list, which is updated annually, includes hundreds of chemicals found in many everyday items. The purpose of Prop 65 is to inform the public about exposure to these chemicals.

Prop 65 does not ban the sale of products containing these chemicals but instead requires warnings on any product, product packaging, or literature with the product. Moreover, a Prop 65 warning does not mean that a product is in violation of any product safety standards or requirements. In fact, the California government has clarified that a Prop 65 warning "is not the same as a regulatory decision that a product is 'safe' or 'unsafe.'" Many of these chemicals have been used in everyday products for years without documented harm. For more information, go to https://oag.ca.gov/prop65/faqs-view-all.

A Prop 65 warning means that a company has either (1) evaluated the exposure and has concluded that it exceeds the "no significant risk level"; or (2) has chosen to provide a warning based on its understanding about the presence of a listed chemical without attempting to evaluate the exposure.

Does this law apply everywhere?

Prop 65 warnings are required under California law only. These warnings are seen throughout California in a wide range of settings, including but not limited to restaurants, grocery stores, hotels, schools, and hospitals, and on a wide variety of products. Additionally, some online and mail order retailers provide Prop 65 warnings on their websites or in catalogs.

How do the California warnings compare to federal limits?

Prop 65 standards are often more stringent than federal and international standards. There are various substances that require a Prop 65 warning at levels that are far lower than federal action limits. For example, the Prop 65 standard for warnings for lead is 0.5 µg/day, which is well below the federal and international standards.

Why don't all similar products carry the warning?

- Products sold in California require Prop 65 labelling while similar products sold elsewhere do not.
- A company involved in a Prop 65 lawsuit reaching a settlement may be required to use Prop 65 warnings for its products, but other companies making similar products may have no such requirement.
- The enforcement of Prop 65 is inconsistent.
- Companies may elect not to provide warnings because they conclude that they are not required to do so under Prop 65; a lack of warnings for a product does not mean that the product is free of listed chemicals at similar levels.

Why does Toro include this warning?

Toro has chosen to provide consumers with as much information as possible so that they can make informed decisions about the products they buy and use. Toro provides warnings in certain cases

based on its knowledge of the presence of one or more listed chemicals without evaluating the level of exposure, as not all the listed chemicals provide exposure limit requirements. While the exposure from Toro products may be negligible or well within the “no significant risk” range, out of an abundance of caution, Toro has elected to provide the Prop 65 warnings. Moreover, if Toro does not provide these warnings, it could be sued by the State of California or by private parties seeking to enforce Prop 65 and subject to substantial penalties.



Count on it.