ASSEMBLY & OPERATING INSTRUCTIONS

MONUMENT GRILLS

Liquid Propane Gas Grill

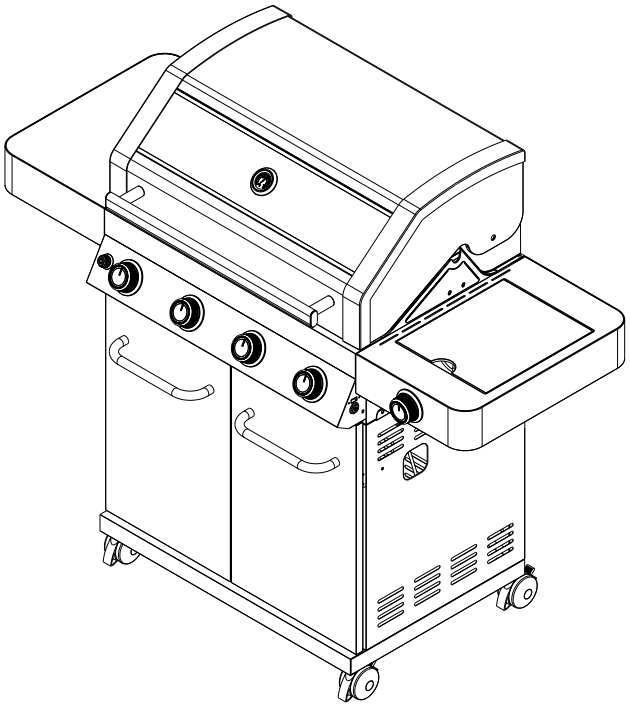

- **Parts**
- **Assembly**
- **Safety Rules**
- **Use and Care**
- **Troubleshooting**

⚠ WARNING:
Read this Owner's manual carefully to ensure your gas grill is properly assembled, installed and maintained. Failure to follow these instructions could result in serious injury and/or property damage. This gas grill is intended for **OUTDOOR** use only and is not intended to be installed in or on recreational vehicles or boats.

Note to Installer
Leave this Owner's Manual with the customer after delivery and/or installation.

Note to Consumer
Leave the Owner's Manual in a convenient place for future reference.

Customer Service Helpline: Warranty & Parts
1-888-980-4933
Monday – Friday 9am – 6pm CST

MFG No.: 41847NG
UPC No.:856597007386
Make sure the cylinder valve connection device fits properly and safely with the connection device attached to the inlet of the pressure regulator.

Table of Contents

Warranty **2**
Safety Precautions **2-4**
Hardware List **5**
Parts Diagram **6**
Parts List **7**
Assembly Instructions **8-17**
Lighting Instructions **17-19**
Cleaning and Maintenance **20-21**
Troubleshooting **21**
Cooking Instructions **22**
Cooking Chart **23**
Natural Conversion **24-28**

Grill Warranty

One-Year Full Warranty on Grill
If this grill fails due to defective material or workmanship within one year from the date of purchase, call 1-888-980-4933 to arrange for a free repair (or replacement if repair proves impossible).

8-Year Limited Warranty on Stainless Steel Burners
For eight years from the date of purchase, any stainless-steel burner that rusts through will be replaced free of charge. After the first year from the date of purchase, you pay for labor if you wish to have it installed.

All warranty coverage excludes ignitor batteries and grill part paint loss, discoloration or rusting, which are either expendable parts that can wear out from normal use within the warranty period, or are conditions that can be the result or normal use, accident or improper maintenance,

All warranty coverage is void if this grill is ever used for commercial or rental purposes.

All warranty coverage applies only if this grill is used in the North America.

This warranty gives you specific legal rights, and you may have other right which vary from state to state.

The warranty is only valid for original purchasers with proof of purchase from authorized retailers. Any product bought second hand or through an unauthorized retailer, will not be covered by warranty. It is the duty of the purchaser to verify that a retailer is authorized. A purchase on Amazon or other marketplace internet retailer from any entity other than Monument Grills is not an original purchase and will not qualify for a warranty

Safety Precautions

⚠ WARNING
Combustion by products produced when using this product contain chemicals known to the State of California to cause cancer, birth defects, or other reproductive harm.

⚠ WARNING
Failure to comply with these instructions could result in a fire or explosion that could cause serious bodily injury, death, or property damage.

⚠ WARNING
Your grill will get very hot. Never lean over the cooking area while using your grill. Do not touch cooking surfaces, grill housing, lid or any other grill parts while the grill is in operation, or until the gas grill has cooled down after use.
Failure to comply with these instructions may result in serious bodily injury.

⚠ WARNING
1. **Do not store or use gasoline or other flammable liquids or vapors in the vicinity of this or any other appliance.**
2. **An LP cylinder not connected for use shall not be stored in the vicinity of this or any other appliance.**

⚠ DANGER
If you smell gas:
1. **Shut off gas to the appliance.**
2. **Extinguish any open flame.**
3. **Open lid.**
4. **If odor continues, keep away from the appliance and immediately call your gas supplier or your fire department.**

Grill Installation Codes
The installation must conform with local codes or, in the absence of local codes, with either the national fuel gas code, ANSI Z 223.1/NFPA S4, Natural gas and propane installation code, CSA B149.1, or propane storage and handling code, B149.2, or the standard for Recreational vehicles, ANSI A 119.2, and CSA Z240 RV series recreational vehicle code, as applicable.
LP gas grill models are designed for use with a standard 20 lb. Liquid Propane Gas tank, not included with grill. Never connect your gas grill to an LP gas tank that exceeds this capacity.

Safety Precautions

A tank of approximately 12 inches in diameter by 18-1/2 inches high is the maximum size LP gas tank to use. **You must use an OPD gas tank which offers an Overfill Prevention Device.** This safety feature prevents the tank from being overfilled which can cause malfunction of the LP gas tank, regulator and/or grill.

The LP gas tank must be constructed and marked in accordance with specifications of the U.S. Dept. of Transportation (DOT). In Canada, the LP gas tank must meet the National Standard of Canada ,Can CSA –B339 , Cylinders , spheres and Tubes for Transportation of Dangerous Goods and Commission .

1. The LP gas tank must have a shutoff valve, terminating in an LP gas supply tank valve outlet, that is compatible with a Type 1 tank connection device. The LP gas tank must also have a safety relief device that has a direct connection with the vapor space of the tank.
2. Always keep LP gas tanks in an upright position. The tank supply system must be arranged for vapor withdraw.
3. The LP gas tank used must have a collar to protect the tank valve.

Proper Placement and Clearance of Grill

Never use your gas grill in a garage, porch, shed, breezeway or any other enclosed area. Your gas grill is to be used **outdoors only,** at least 24 inches from the back and side of any combustible surface. Your gas grill should not be used under overhead combustible construction . Do not obstruct the flow of ventilation air around the gas grill housing.

• Do not install this outdoor gas grill in or on recreational vehicles or boats

• Keep outdoor gas grill area clear and free from combustible materials, gasoline and other flammable vapors and liquids

• Do not obstruct the flow of combustion and ventilation air. Check for this each time prior to using grill.

• **Never** connect an unregulated LP gas tank to your gas grill. The gas regulator assembly supplied with your gas grill is adjusted to have an outlet pressure of 11” water column (W.C.) for connection to an LP gas tank.

• Only use the regulator and the hose assembly supplied with your gas grill. Replacement regulators and hose assemblies must be those specified in this manual.

- Have your LP gas tank filled by a reputable propane gas dealer and visually inspected and re-qualified at each filling.
- Do not store a spare LP gas tank under or
- Never fill the tank beyond 80 percent full . If this information is not followed exactly a fire causing death or serious injury may occur.
- Always keep LP gas tanks in an upright position.
- Do not store (or) or use gasoline or other flammable vapors and liquids in the vicinity of this gas grill.
- Do not subject the LP gas tank to excessive heat.
- Never store an LP gas tank indoors. If you store your gas grill in the garage or other indoor location, **always** disconnect the LP gas tank first and store it safely outside.



- Place dust cap on cylinder valve outlet whenever the cylinder is not in use. Only install the type of dust cap on the cylinder valve outlet that is provided with the cylinder valve. Other types of caps or plugs may result in leakage of propane.
- LP gas tanks must be stored outdoors in a well-ventilated area and out of reach of children. Disconnected LP gas tanks must not be stored in a building, garage or any other enclosed area.
- When your gas grill is not in use the gas must be turned off at the LP gas tank.
- The pressure regulator and hose assembly must be inspected before each use of the grill. If there is excessive abrasion or wear or if the hose is cut, it must be replaced prior to the grill being used again.
- Keep the gas regulator hose away from hot grill surfaces and dripping grease. Avoid unnecessary twisting of hose. Visually inspect the hose prior to each use for cuts, cracks, excessive wear or other damage. If the hose appears damaged do not use the gas grill. Call 1-888-980-4933 for assistance.
- **Never** light your gas grill with the lid closed or before checking to ensure the burner tubes are fully seated over the gas valve orifices.
- **Never** allow children to operate your grill.

⚠ WARNING

A strong gas smell or hissing sound of gas indicates a serious problem with your gas grill or the LP gas tank. Failure to immediately follow the steps listed below could result in a fire or explosion that could cause serious bodily injury, death, or property damage.

- Shut off gas supply to the gas grill.
- Turn the control knobs to OFF position.
- Put out any flame with a proper fire extinguisher.
- Open Grill Lid.
- Get away from the LP gas tank.
- Do not try to fix the problem yourself.
- If odor continues or you have a fire you can not extinguish, call your fire department. Do not call near the LP gas tank because your telephone is a form of electrical device and could create a spark resulting in fire and/or explosion.

NOTE: The normal flow of gas through the regulator and hose assembly can create a humming noise. A low volume of noise is perfectly normal and will not interfere with operation of the grill. If humming noise is loud and excessive you may need to purge air from the gas line or reset the regulator excess gas flow device. This purging procedure should be done every time a new LP gas tank is connected to your grill. For help with this procedure refer to page 19, Item 4 of "If Grill Still Fails To Light" or call the Customer Service Helpline 9 AM to 6 PM CST at: 1-888-980-4933.

CAUTION: Beware of Flash-Back

CAUTION: Spiders and small insects occasionally spin webs or make nests in the grill burner tubes during transit and warehousing. These webs can lead to gas flow obstruction which could result in a fire in and around burner tubes. This type of fire is known as "FLASH-BACK" and can cause serious damage to your grill and create an unsafe operating condition for the user.

Although an obstructed burner tube is not the only cause of "FLASH-BACK", it is the most common cause.

To reduce the chance of "FLASH-BACK", you must clean the burner tubes before assembling your grill, and at least once a month in late summer or early fall when spiders are most active. Also perform this burner tube cleaning procedure if your grill has not been used for an extended period-of-time.

See Cleaning Burner Tubes and Burner Ports on page 20 of manual.

Burner Flame Check

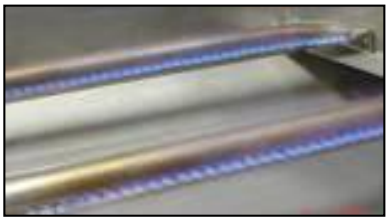



Visually check the burner flames prior to each use. The flames should look like picture, if they do not, refer to the Cleaning Burner Tubes and Burner Ports (refer to page 20 of manual).

⚠ WARNING

Clean the flame tamer/cooking grid/grease pan/tray after each use. Failure to comply this could result in a fire or explosion that could cause serious bodily injury, death, or property damage.

Contents for Hardware Pack

The following table illustrates a breakdown of the hardware pack. It highlights what components are used in the various stages of assembly.

A	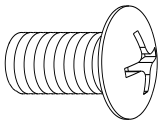	5/32"x12mm	11 pcs
B	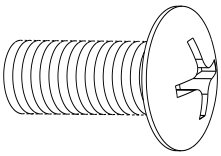	1/4"x15mm	13 pcs
C	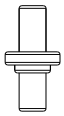		2 pcs
D		1/4''	4 pcs

Tools required for assembly

Philips Head Screwdriver (not included).
Note: The left and right sides of the grill are on your left and right as you face the front of the grill.

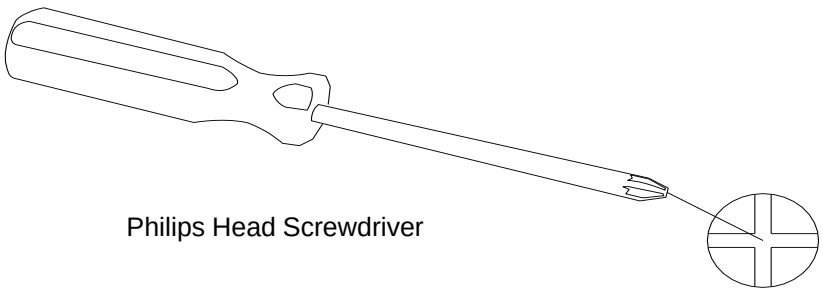

Philips Head Screwdriver

Model 41847NG Parts Diagram

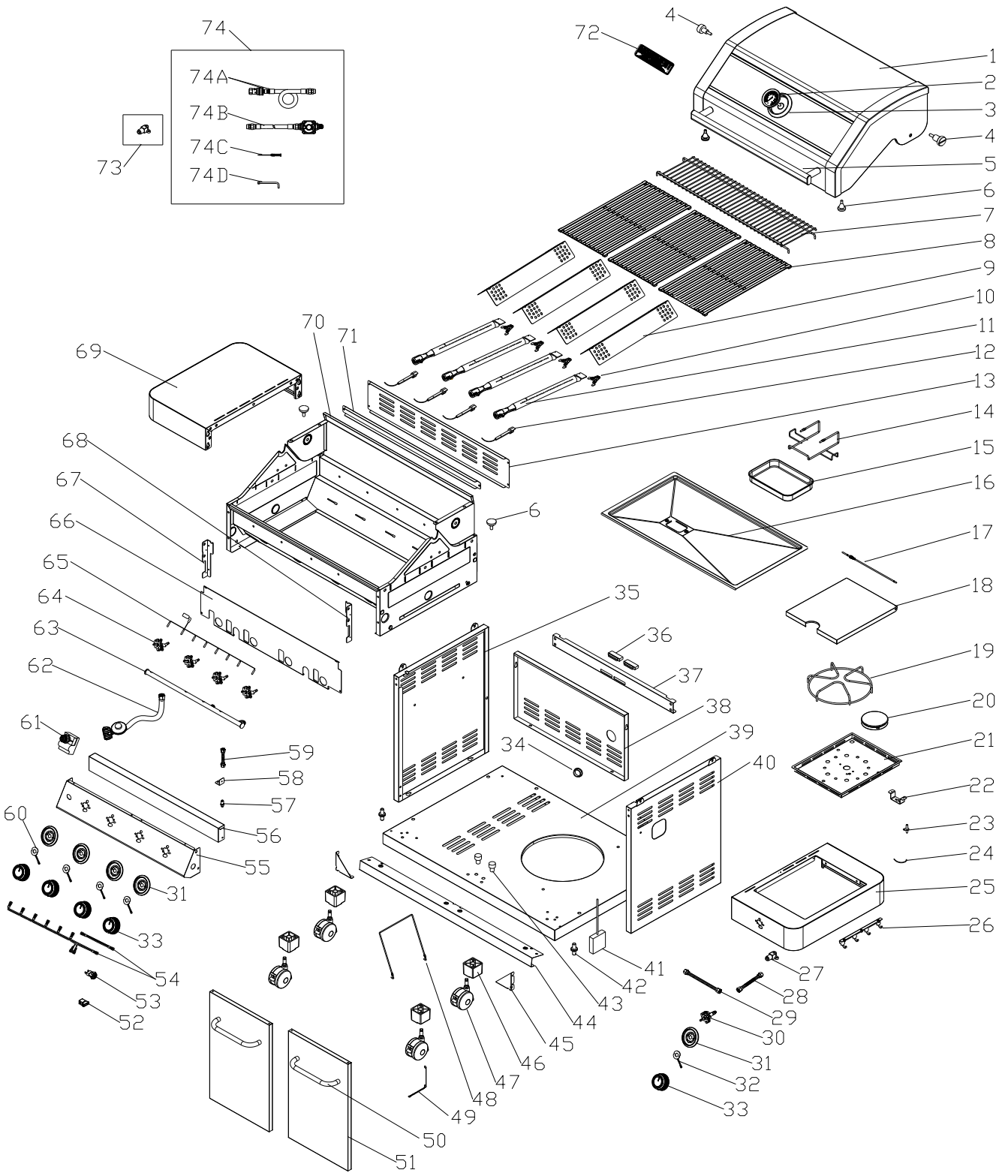

Model 41847NG Parts List

seq. NO.	appellation	qty	Material code	seq. NO.	appellation	qty	Material code
1	Main Lid	1	D010012906	41	Battery Box	1	A0212663
2	Temperature Gauge	1	A0212824	42	Spindle Below Door Panel	2	A0212557
3	Temperature Gauge Seat	1	A0212967	43	Spacing Screw Below Door Panel	2	A02120079
4	Main Lid Screw	2	A0407131	44	Cart Bottom Panel Front Cummerbund Strip	1	D010012063
5	Main Lid Handle	1	D010010251	45	Triangle Bracket, Left	2	D010012745
6	Hood Buffer	4	A0212666	46	Swivel Caster Fixing Plug	4	A0212805
7	Warming Rack	1	A02120877	47	Swivel Caster	4	A0211004
8	Cooking Grid With Hole	3	A0212804	48	Gas-jar Fixing Line	1	A0212837
9	Flame Tamer	4	D010012307	49	Lighting Rod	1	A0212835
10	Clamp Spring	4	A0212873	50	Door Handle	2	D010012747
11	Main Burner	4	A0212926	51	Front Door	2	D010012094
12	Main Burner Igniter Wire	4	D010012900	52	LED Lamp Seat-USB2.0	1	A02120032
13	Back Panel, Top	1	D010012737	53	LED Lamp Switch	1	A0212627
14	Grease Box Bracket	1	A0212838	54	LED Lamp Circuit	1	D010013690
15	Grease Box	1	D010012705	55	Main Control Panel	1	D010014390
16	Grease Tray	1	D010012072	56	Main Control Panel Frame	1	D010012108
17	Side Burner Lid Hinge Rod	1	A0212534	57	Gas Connector	1	A0212830
18	Side Burner Lid	1	D010007598	58	Gas Connector Fixing Panel	1	D010012298
19	Side Burner Cooking Grid, Right	1	A0212248	59	Main Burner Flex Gas Line	1	A0212829
20	Side Burner, Right	1	A0212533	60	LED Lamp Panel-B	4	A02120213
21	Side Burner Tray	1	D011006420	61	Pulse Igniter Module	1	A02120838
22	Side Burner Orifice Bracket	1	D019706920	62	Regulator, LP	1	A0212831
23	Side Burner Igniter, Right	1	A0212436	63	Main Manifold	1	A02120087
24	Side Burner Igniter Wire, Right	1	A0212869	64	Main Gas Valve	4	A02120914
25	Side Shelf, Right	1	D010014389	65	Gas Valve Circuit	1	A02120842
26	Hook	1	D010018023	66	Front Baffle	1	D010012052
27	Side Burner Orifice	1	A0212828	67	Control Panel Fixing Panel, Left	1	D010012050
28	Side Burner Flex Gas Line, 250	1	A020021	68	Control Panel Fixing Panel, Right	1	D010012051
29	Side Burner Flex Gas Line, 480	1	A02120090	69	Side Shelf, Left	1	D010012770
30	Side Burner Gas Vavle, Right	1	A02120832	70	Firebox	1	D010012655
31	Control Knob Base	5	D010012905	71	Back Panel, A	1	D010015501
32	LED Lamp Panel-A	1	A02120804	72	Logo	1	A0212808
33	Control Knob	5	A02120817	73	NG Side Burner Orifice	1	A02120889
34	RUBBER GROMMET	1	A020064	74	NG Assembly		D010020645
35	Side Panel,Left	1	D010012742	74A	NG Hose		A02120849
36	Door Magnet	2	A0201249	74B	NG Regulator		A02120848
37	Cart Frame, Front	1	D010012721	74C	Slot Screwdriver		A02120843
38	Back Panel, Bottom	1	D010023163	74D	Orifice Sockets		A02120844
39	Bottom Panel	1	D010012098		Manual	1	C043481
40	Side Panel, Right	1	D010012903		Hardware Pack	1	D010012753

For assembly questions, call:
1-888-980-4933

To make sure you obtain the correct replacement parts for your gas grill, refer to the part numbers on this page.

Important: Keep this Owner's Manual for convenient reference and for part replacement.

Important: Use only parts listed above. When ordering parts, providing the following information:

1. Model #
2. Part Number (see PART# in chart)
3. Part Description
4. Quantity of parts needed
5. Grill serial number

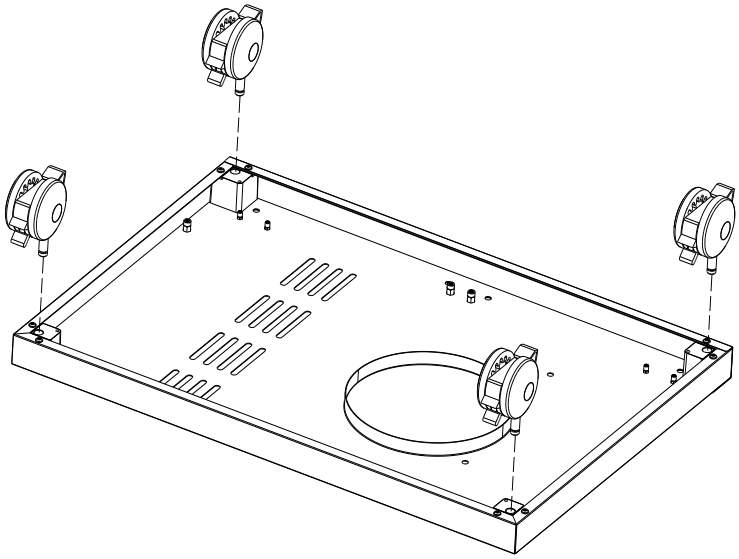

Insert Part No.47 into the bottom plate.

Figure 1

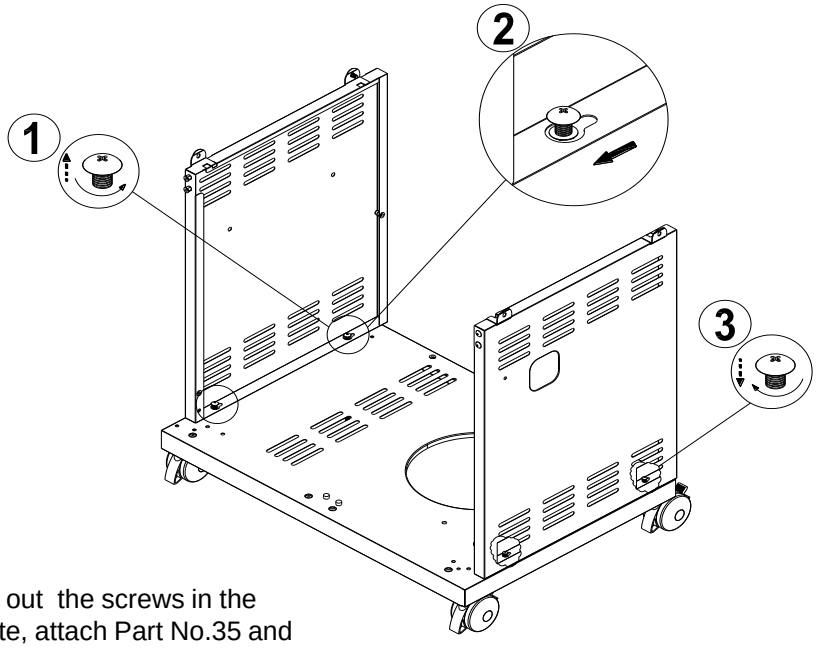

Half screw out the screws in the bottom plate, attach Part No.35 and Part No.40 onto the relevant screw holes and screw tightly.

Figure 2

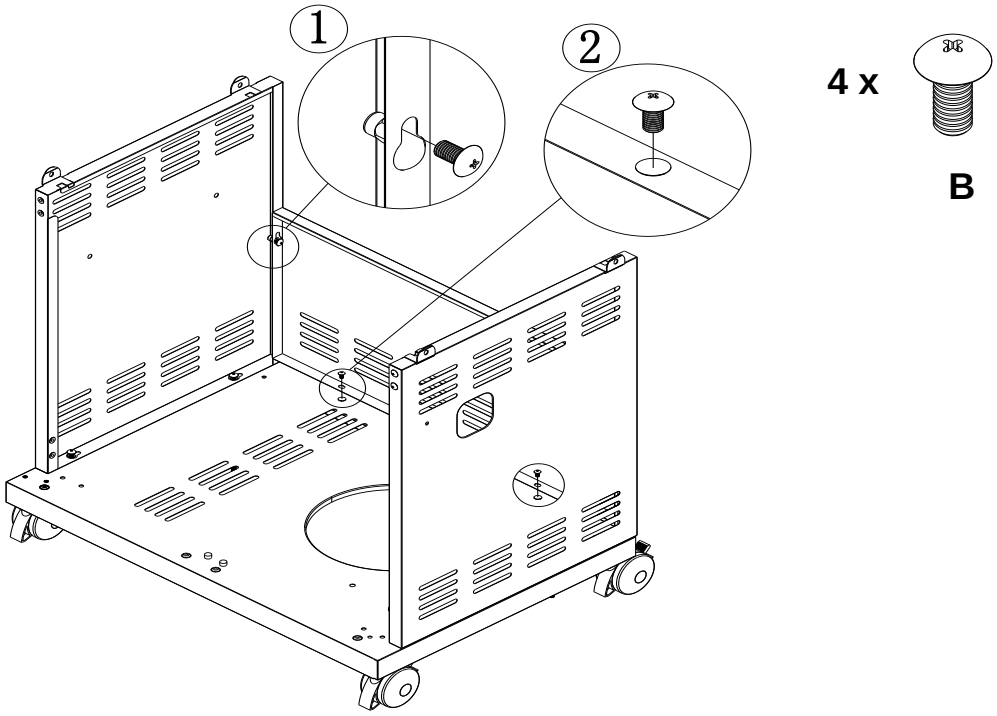

Install Part No.38 onto the relevant place
with four B screws.

Figure 3

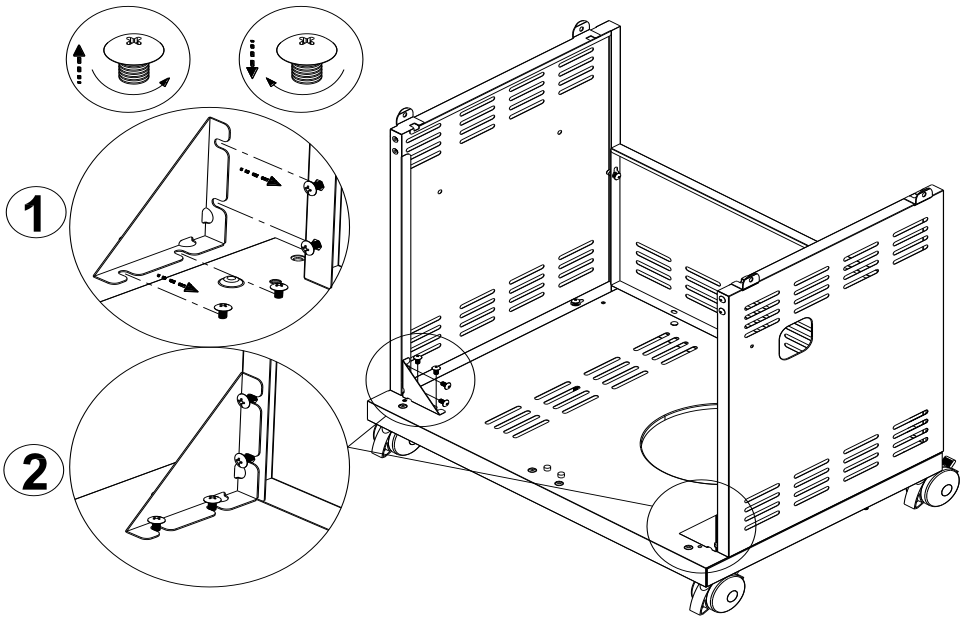

Half screw out the screws in the bottom
and side plates, attach Part No.45 onto the relevant
screw holes and screw tightly.

Figure 4

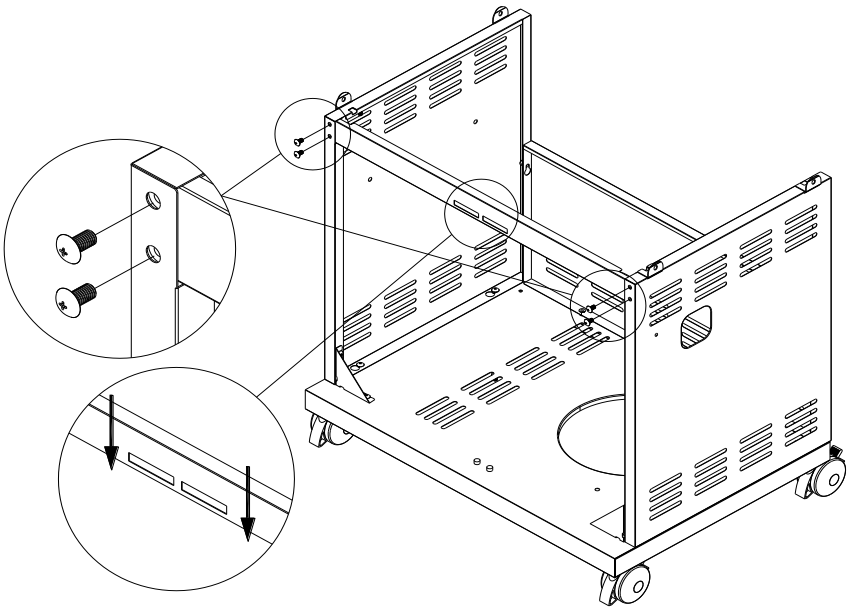

4 x

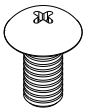

A

Install Part No.37 onto the relevant place with four A screws shown in Figure 5.
Attention: magnet downward.

Figure 5

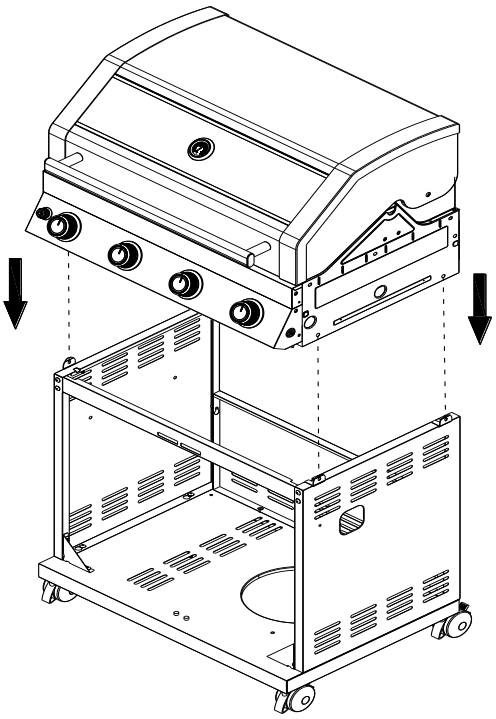

Figure 6

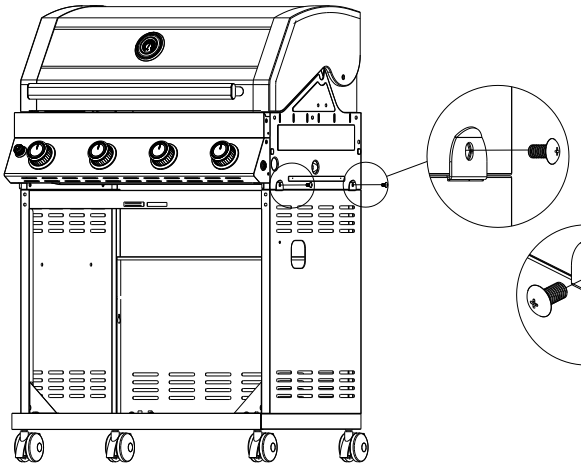

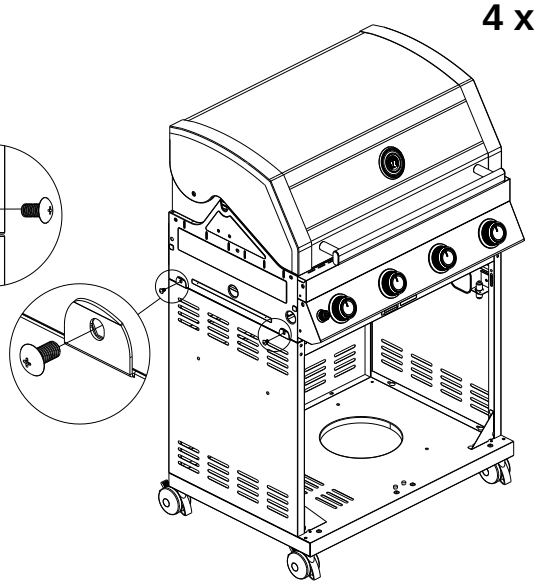

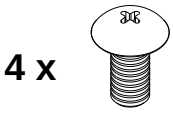

4 x

B

Screw the grill body and the
cart tightly with four B screws. (Figure 7.1)

Figure 7.1 **Figure 7.2**

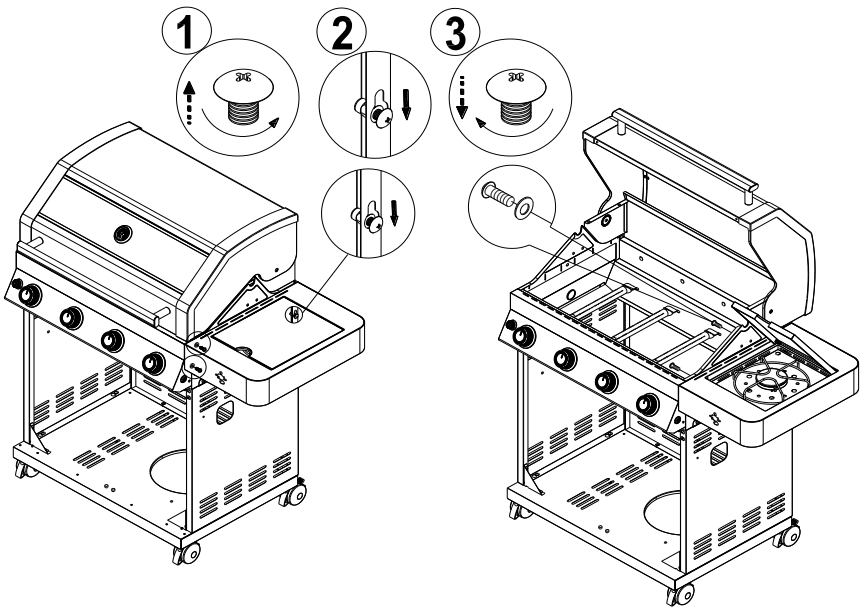

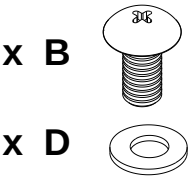

2 x B

2 x D

1.Half screw out the three big screws outside the grill body,
attach Part No.25 onto the relevant screw holes and screw tightly.
2.Screw Part No.25 tightly with B screw and D spacer inside the grill body.

Figure 8.1 **Figure 8.2**

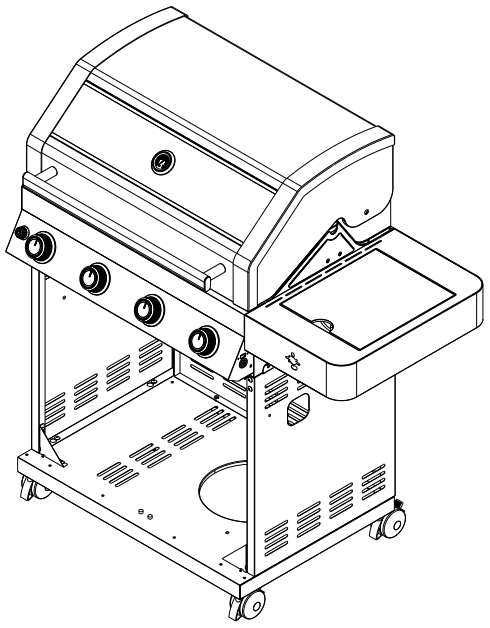

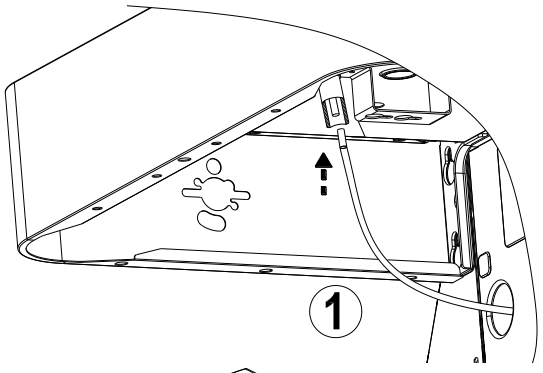

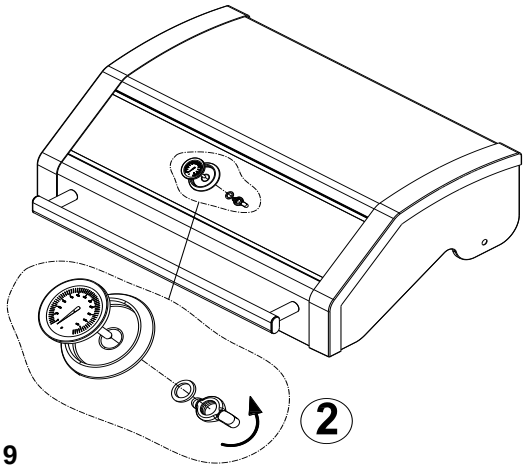

1. Insert the wire of Part No.23.
2. Put Part No.2, Part No.3 onto the Main Lid.

Figure 9

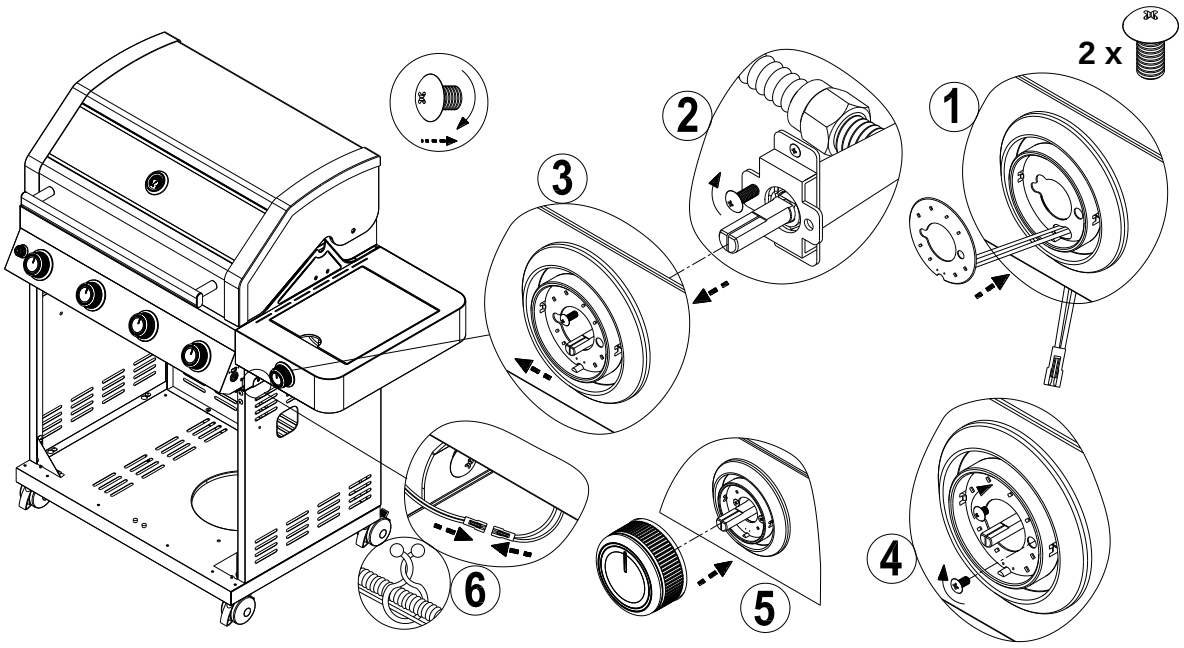

1. Insert Part No.30, Part No.32 and Part No.33 as the figure shows.
2. Insert the wire as the figure shows.

Figure 10

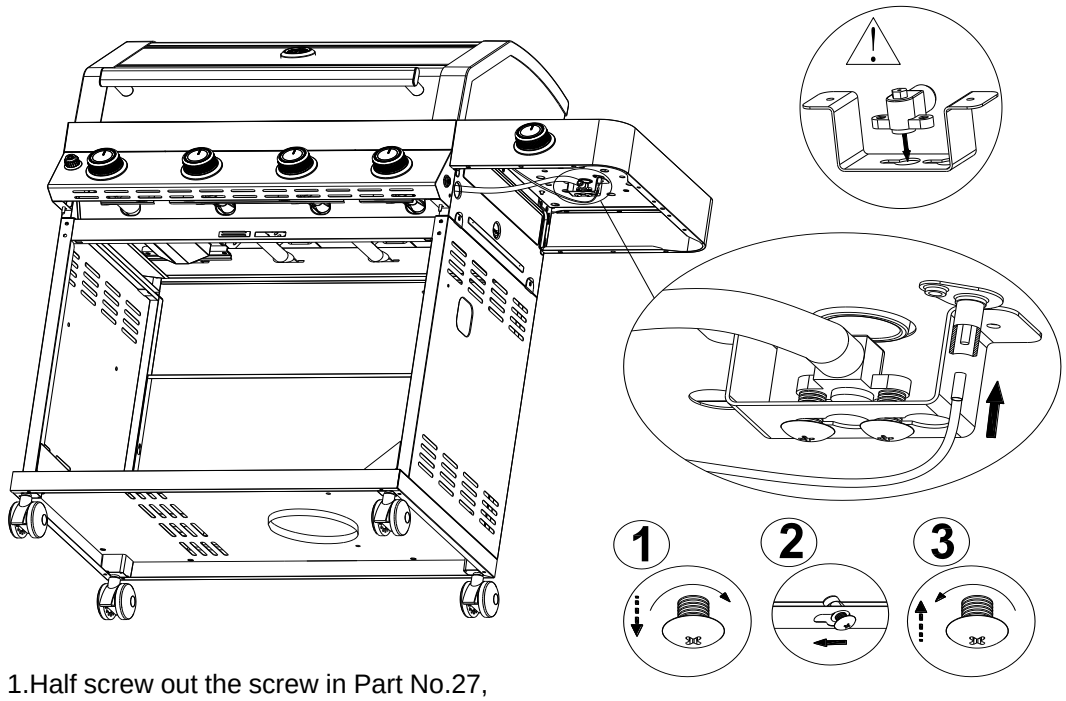

1.Half screw out the screw in Part No.27,
insert into the hole of Part No.22
and screw tightly.

Figure 11

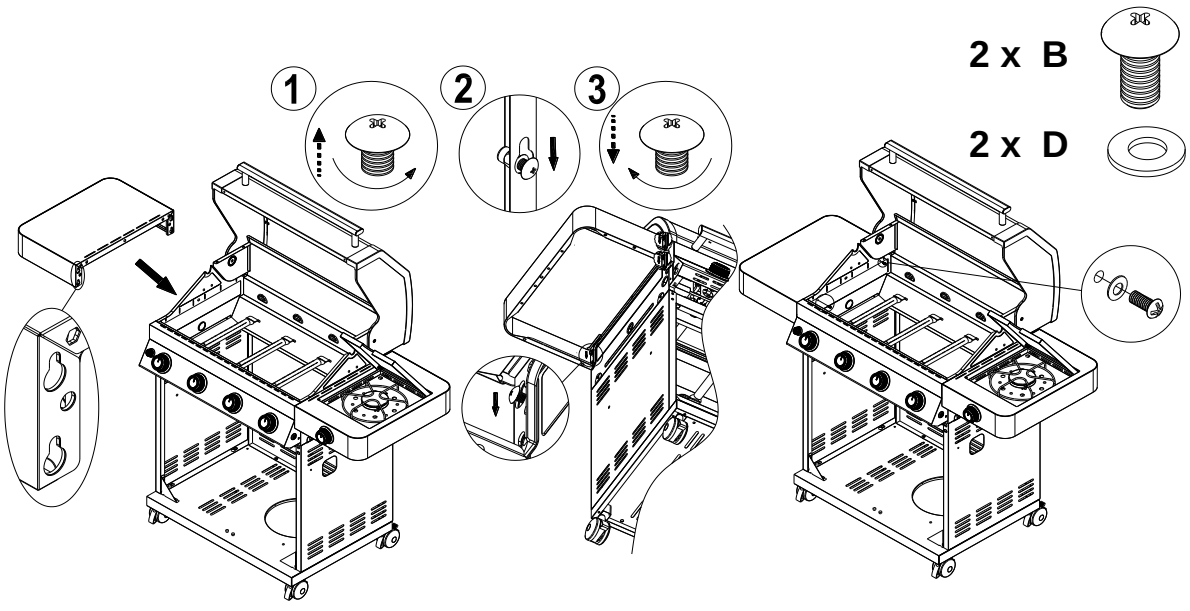

1.Half screw out the three big screws on the grill body,
attach Part No.69 onto the relevant screw holes and screw tightly.
2.Screw Part No.69 tightly with B screw and D spacer inside the grill body.

Figure 12.1 **Figure 12.2** **Figure 12.3**

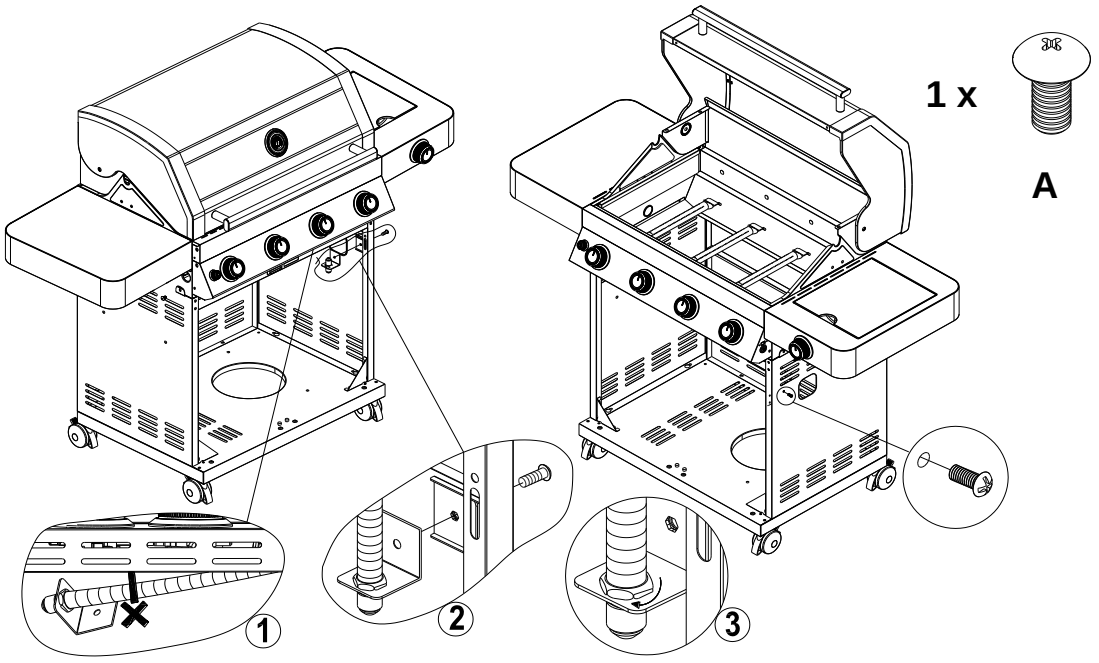

Fixed Part No.58 onto the right plate with one A screw.

Figure 13.1 **Figure 13.2**

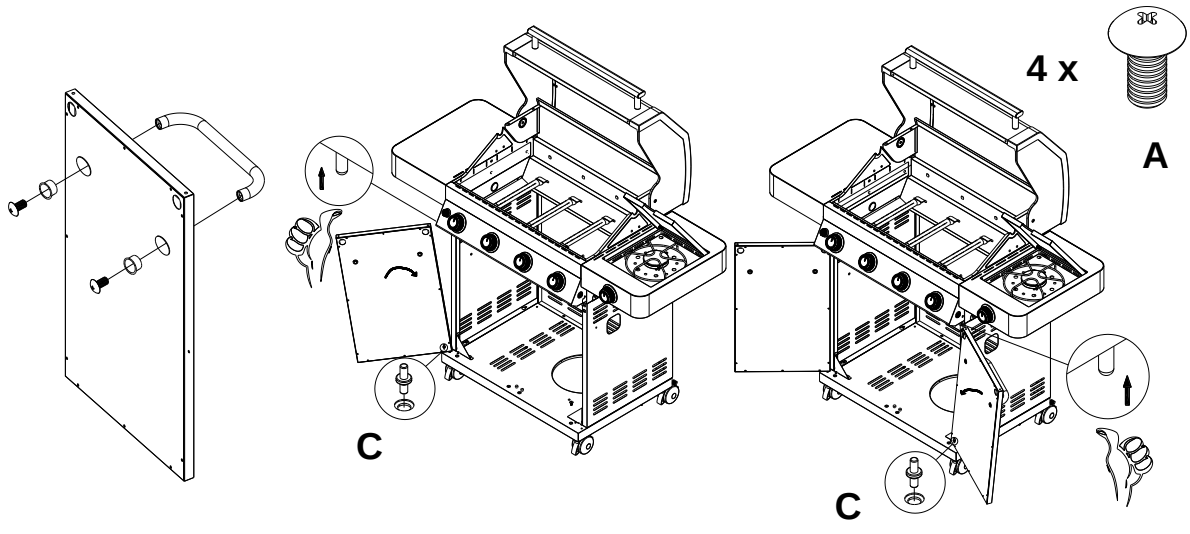

1. Install Part No. 50 onto Part No.51 with A screws. (Figure 14.1)
2. Put the C part into the relevant hole in the bottom plate. (Figure 14.2)
3. Put Part No.51 into the C part. (Figure 14.2)
4. Attach the doors by pressing the flexible axis upward.

Figure 14.1 **Figure 14.2** **Figure 14.3**

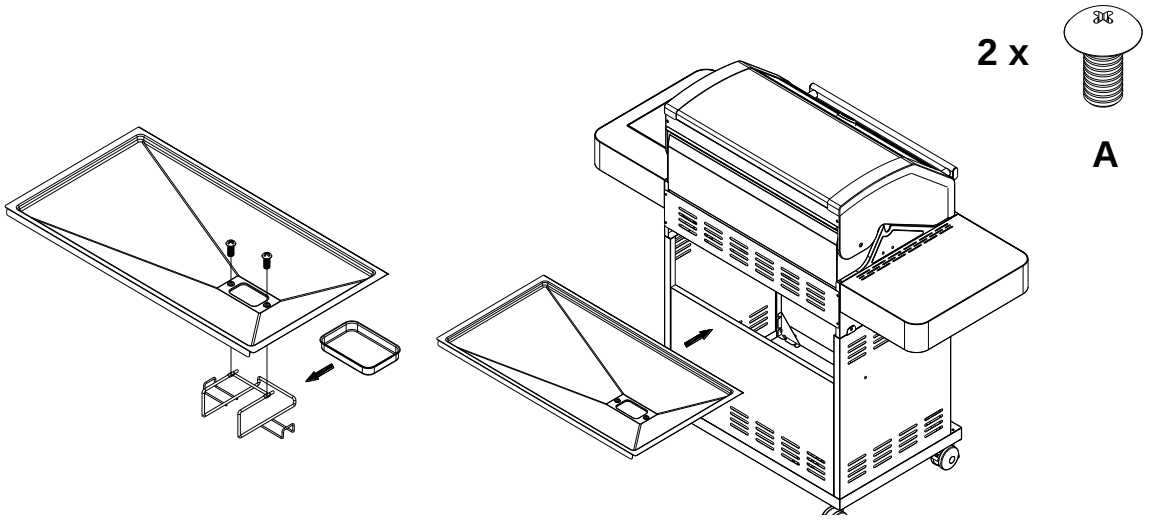

1. Install Part No.14 onto Part No.16 with two A screws. (Figure15.1)
2. Put Part No.15 into Part No.14. (Figure15.1)
3. Put the grease tray into the grill body. (Figure15.2)

Figure 15.1 **Figure 15.2**

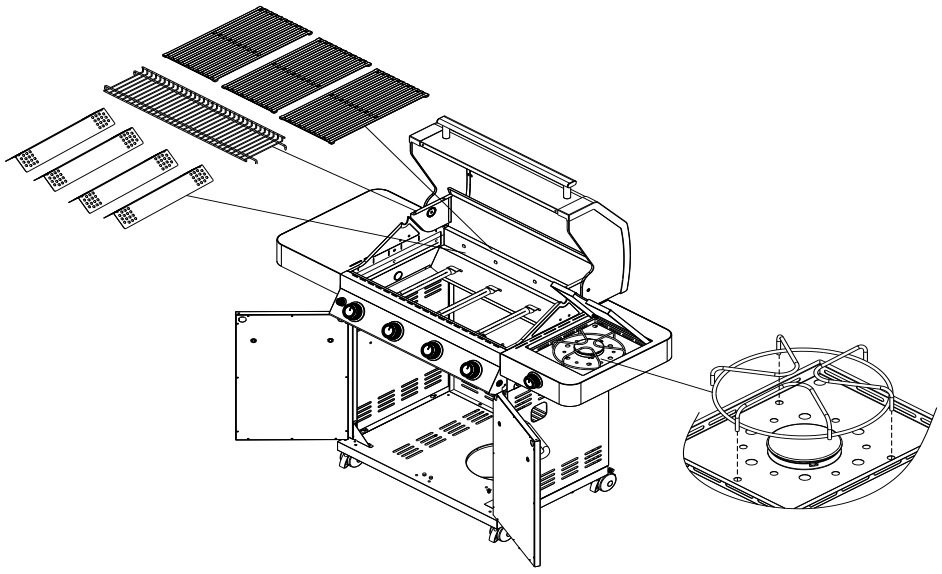

Put Part No. 7, Part No. 8 , Part No. 9 into the relevant place.

Figure 16

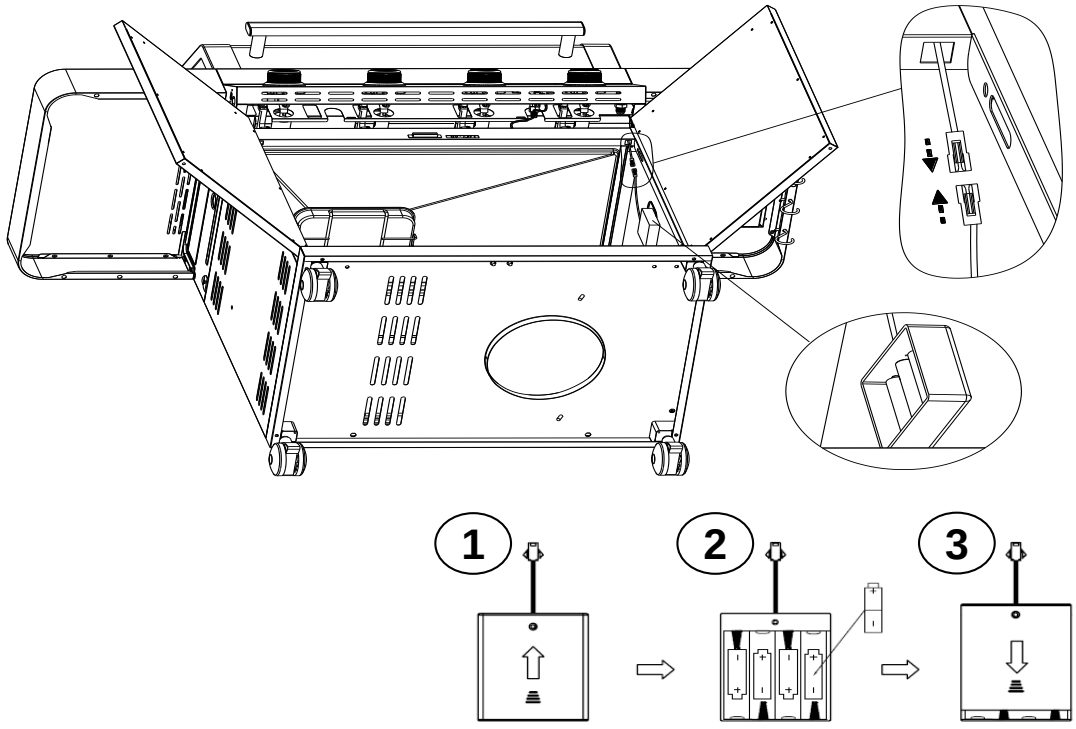

Connect Part No.54 to Part No.41.

Figure 17

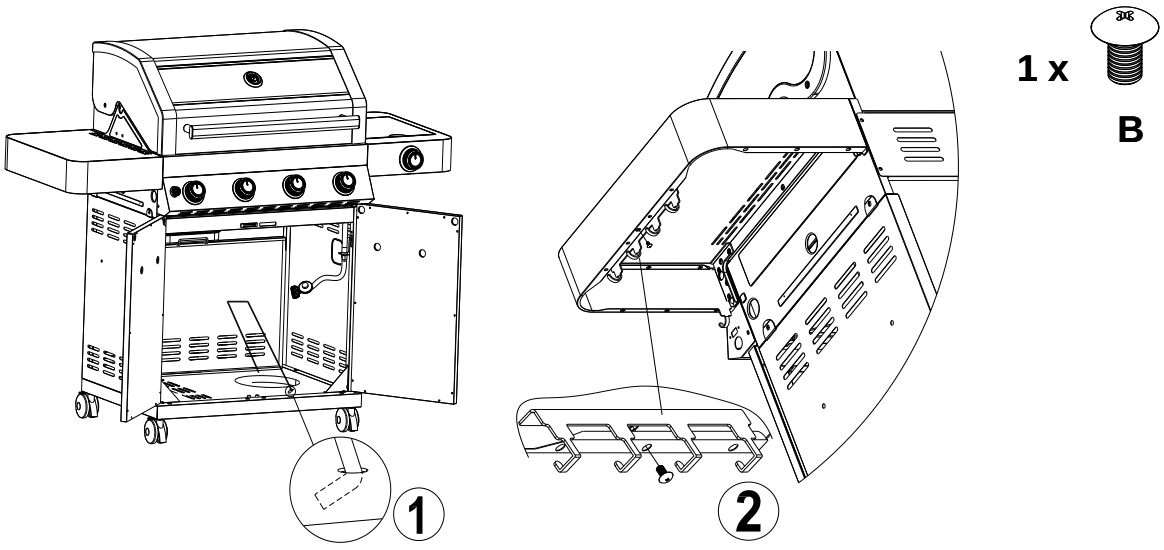

1.Install Part No. 48 onto the bottom plate.
2.Install Part No. 26 onto the side plate.

Figure 18

Connecting LP Gas Tank to LP Grill

1. Place foot ring of 20 lb. tank into the hole in bottom panel. Make sure the tank valve is in OFF position.(Fig.20).
2. Check the tank valve to ensure it has proper external mating threads to fit the hose and regulator assembly provided.
3. Make sure all burner valves are in OFF position.
4. Inspect the valve connection port and regulator assembly. Look for damage or debris. Remove any debris. Inspect hose for damage. Never use damaged or plugged equipment.
5. When connecting regulator and hose assembly to tank valve, hand tighten quick coupling nut clockwise to a full stop (Fig.19) Do not use a wrench to tighten because it could damage the quick coupling nut and result in a hazardous condition.
6. Open tank valve fully (counterclockwise). Use a soapy water solution to check all connections for leaks before attempting to light your grill. If a leak is found, turn tank valve off and do not use your grill until the leak is repaired.

CAUTION: When the appliance is not in use, gas must be turned off at the supply tank.

Regulator Connection

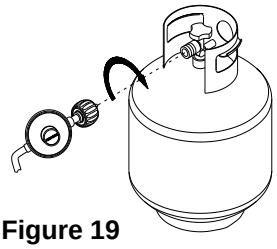

Figure 19

Congratulations

Your gas grill is now ready for use. Before the first use and at the beginning of each season (and whenever the LP gas tank has been changed):

1. Read all safety, lighting and operating instructions.
2. Check gas valve orifices, burner tubes and burner ports for any obstructions.
3. Perform gas leak check according to instructions found on next page of the manual.

Figure 20

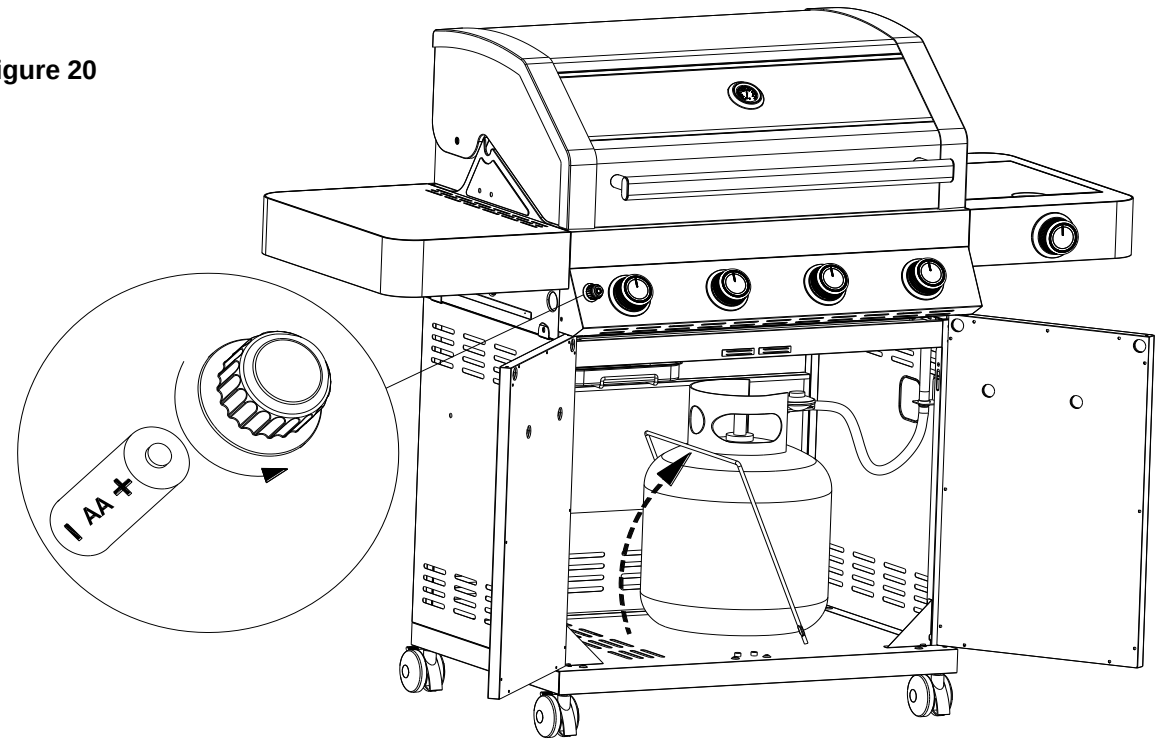

Checking for LP gas leaks

Never test for leaks with a flame. Prior to first use, at the beginning of each season, or every time your LP gas tank is changed, you must check for gas leaks.

1. Make a 50/50 (soap/water) mild soap solution.
2. Turn the control knobs to full OFF position; turn gas ON at supply tank.
3. Apply the soap solution with a clean brush to all gas connections. See below. If growing bubbles appear in the solution the connections are not properly sealed. Check each fitting and tighten or repair as necessary.

Gas Connection Leak Check





4. If you have a gas connection leak you cannot repair, turn gas OFF at supply tank, disconnect fuel line from your grill and call 1-888-980-4933 or your gas supplier for repair assistance.
5. Also apply soapy solution to the tank seams. See below. If growing bubbles appear, shut tank OFF and do not use or move it! Contact an LP gas supplier or your fire department for assistance.

Gas Tank Leak Check

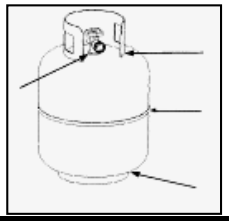

Grill Lighting Instruction

Grill Lighting Instructions for Main Burners

1. Do not smoke while lighting grill or checking gas supply connections.
2. Be sure that LP gas tank is sufficiently full.
3. Be sure all gas connections are securely tightened.
4. Turn on gas supply
5. Open the grill main lid and side burner lid.
6. Push and turn any main burner knob to IGNITE/HI position, at the same time, press and hold electronic ignition button for 3 to 5 seconds to light burner.

⚠ WARNING

Failure to open grill lid during the lighting procedure could result in a fire or explosion that could cause serious bodily injury, death, or property damage.

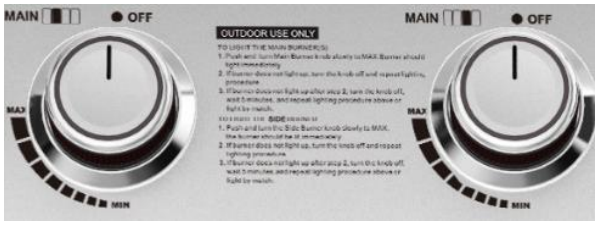

7. To light burners, push and turn burner knob(s) to IGNITE/HI. At the same time, press and hold electronic ignition button for 3 to 5 seconds to light burner. Adjust knob(s) to desired setting.
8. If the burner does not light after 5 seconds, turn knob to OFF. Turn gas OFF at LP tank and wait 5 minutes for gas to clear. Turn the gas ON at tank and repeat step 6.
9. If burner still does not light, see Match Lighting section and If Grill Still Fails to Light section on following page.

USING THE SIDE BURNER

Inspect the gas supply hose prior to turning the gas "ON". If there is evidence of cuts, wear or abrasion, it must be replaced prior to use. Do not use the side burner if the odor of gas is present.

WARNING: Always keep your face and body as far away from the burner as possible when lighting.

LIGHTING INSTRUCTIONS FOR SIDE BURNER

1. Open side burner lid fully.
2. Push and turn side burner knob to IGNITE/HI position. At the same time, press and hold electronic ignition button for 3 to 5 seconds to light burner.
3. If the side burner does not light after 5 seconds, turn knob to OFF. Turn gas OFF at LP tank and wait 5 minutes for gas to clear. Turn the gas ON at tank and repeat step 2.
4. If burner still does not light, see Match Lighting section and If Grill Still Fails to Light section on following page.



⚠ WARNING

Never lean over the grill cooking area while lighting your gas grill. Keep your face and body a safe distance (at least 18 inches) from the cooking grid surface when lighting your grill by match.

Manually Lighting Your Grill by Match

1. Take the manual lighting stick

2. Insert a match into the lighting stick.

3. Follow steps 1 through 5 of the Basic Lighting Procedure.

4. Light the match and extend the lighting stick to cooking grid surface.

5. Turn the desired control knob to the HI/position setting to release gas. The burner should light immediately.





⚠ WARNING

Should a "FLASH-BACK" fire occur in/or around the burner tubes, follow the instructions below. Failure to comply with these instructions could result in a fire or explosion that could cause serious bodily injury, death, or property damage.

- Shut off gas supply to the gas grill.
- Turn the control knobs to OFF position.
- Put out any flame with a proper fire extinguisher.
- Open grill lid.
- Once the grill has cooled down, clean the burner tubes and burners according to the cleaning instructions found on page 20.

If Grill Still Fails To Light

1. Check gas supply and connections for leaks. Check that all wire connections are secure.

2. Repeat basic lighting procedure. If your grill still fails to operate, turn the gas off at source, turn the control knobs to OFF, check the following:

• Misalignment of burner tubes over orifices
Correction: Reposition burner tubes over orifices.
•Obstruction in gas line
Correction: Remove fuel line from grill. Do not smoke! Open gas supply for 1 second to clear any obstruction from fuel line. Close off gas supply at source and reconnect fuel line to grill.

• Plugged orifice
Correction: Remove burners from grill, carefully lift each burner up and away from gas valve orifice. Remove the orifice from gas valve and gently clear any obstruction with a fine wire. Reinstall all orifices, burners, and cooking components.

3. If an obstruction is suspected in gas valves, call for repair service at 1-888-980-4933.

4. If the grill still does not light you may need to purge air from the gas line or reset the regulator excess gas flow device. **Note:** This procedure should be done every time a new LP gas tank is connected to your grill.

To purge air from your gas line and/or reset the regulator excess gas flow device:

- Turn the control knob to OFF position.
- Turn off the gas at the tank valve.
- Disconnect regulator from LP gas tank.
- Let unit stand for 5 minutes.
- Reconnect regulator to the LP gas tank.
- Turn the tank valve on slowly until ¼ to ½ open.
- Open the grill lid.
- Set control knobs to OFF. Push and turn any control knob to HIGH.
- Turn control knobs to HIGH until all the burners are lit
- You may start to use the grill

5. If all checks or corrections have been made and you still have questions about operating your gas grill, call the **Customer Service Helpline 8 AM – 5 PM CST, Monday through Friday at** 1-888-980-4933

Cleaning and Maintenance

To ensure a proper working unit the following proper care and maintenance is suggested.

Cleaning Cooking Grids
We suggest you wash your cooking grids in a mild soap and warm water solution. You can use a washcloth or soft brush to clean your cooking grids.

Cleaning Heat diffusers
Periodically you should wash the heat diffusers in a soap and warm water solution. Use a soft brush to remove stubborn burnt-on cooking residue. The heat diffusers should be dry before you reinstall them.

Cleaning Grease Tray
The grease tray should be emptied and wiped down periodically and washed in a mild detergent and warm water solution. A small amount of sand or cat litter may be placed in bottom of grease tray to absorb the grease. Check the grease tray frequently, don't allow excess grease to accumulate and overflow out of the grease tray.

Annual Cleaning of Grill Interior
Burning-off the grill after every use will keep it ready for your next use. However, once a year you should give the entire grill a thorough cleaning to keep it in top operating condition. Follow these steps.
1. Turn all burner valves to full OFF position.
2. Turn LP gas tank valve to full OFF position.
3. Detach LP gas hose and regulator assembly from your gas grill. Inspect for any damage and replace as necessary with manufacturer replacement part number found on parts list.
4. Remove and clean heat diffusers, cooking grids and grill burners.
5. Cover each gas valve orifice with aluminum foil.
6. Brush inside and bottom of grill with a nylon brush, and wash with a mild soap and warm water solution. Rinse thoroughly and let dry.
7. Remove the aluminum foil, reinstall heat diffusers, and cooking grids.
8. Reconnect gas source and observe burner flame for correct operation.

Cleaning Exterior Surface
•We suggest you wash your grill using a mild soap and warm water solution. You can use a washcloth or sponge for this process. Do not use abrasives or a brush that might remove finish during the cleaning process.

Cleaning Exterior Stainless Steel Surfaces

Weathering and extreme heat can cause exterior stainless-steel surfaces to turn tan in color. Machine oils used in manufacturing process of stainless steel can also cause this tanning color. Use a stainless-steel cleaner to polish stainless steel surfaces of your grill. Never use abrasive cleaners or scrubbers because they will scratch and damage your grill.

Cleaning Burner Tubes and Burner Ports

To reduce the chance of "FLASH-BACK" the procedure below should be followed at least once a month in late summer or early fall when spiders are most active or when your grill has not been used for a period of time.

1. Turn all burner valves and gas tank valve to off position.
2. Detach the LP gas regulator assembly from your gas grill.
3. Remove cooking grids, heat diffusers, and grease tray from the grill.
4. Remove the screws from the underside of each burner and lift the burners up and away from the gas valve orifice.
5. Using a bent stiff wire in the shape of a hook , air hose or a bottle brush, run it through the burner tube and inside several times to remove any debris.
6. Replace burners, see illustration below.

Step 1 Step 2 Step 3



⚠ WARNING
The location of the burner tube with respect to the orifice is vital for safe operation. Check to ensure the orifice is inside the burner tube before using the gas grill. If the burner tube does not fit over the valve orifice, lighting the burner may cause explosion and/or fire.

Regardless of which burner cleaning procedure you use, we recommend you also complete the following steps to help prolong burner life.

1. Use a fiber pad or nylon brush to clean the entire outer surface of each burner until free of food residue and dirt.

2. Clean any clogged ports with a stiff wire, such as an open paper clip.

3. Inspect each burner for damage (cracks or holes) and if such damage is found, order and install a new burner. After installation check to ensure that gas valve orifices are correctly placed inside the ends of the burner tubes.

⚠ WARNING

Spiders and insects can nest inside the burners of the grill and disrupt gas flow. This very dangerous condition could cause a fire behind the valve panel, thereby damaging the grill and making it unsafe for operation. Inspect the grill at least twice a year.

Troubleshooting

BEFORE CALLING FOR SERVICE

If the grill does not function properly, use the following check list before calling for service.

You should inspect the burners at least once a year or immediately after any of the following conditions occur:

PROBLEMS	WHAT TO DO
Grill won't light when the control knob is rotated.	Check to see if LP tank is empty. Clean wires and/or electrode by rubbing with alcohol and clean swab. Wipe with dry cloth. Make sure the wire is connected to electrode assembly. Do other burners on the unit operate? Check to see if other burners operate. If so, check the gas orifice on the malfunctioning burner for an obstruction.
Burner flame is yellow or orange, in combination with the odor of gas.	Refer to Clean Burner Tubes and Burner Ports on page 20. If problem still exists, please call 1-888-980-4933.
Low heat with knob in "HI" position.	Is the fuel hose bent or kinked? Is the grill in a dusty area? Is there adequate gas supply available? If it is only one burner that appears low, does the orifice or burner need cleaning? Is the gas supply or gas pressure low?

Cooking Instructions

⚠ WARNING

Do not leave the grill unattended.

Your grill will get very hot. Never lean over the cooking area while using your grill. Do not touch cooking surfaces, grill housing. Grill Lid or any other grill parts while the grill is in operation, or until the grill has cooled down after use. Failure to comply with these instructions may result in serious bodily injury.

Burn-off

Before cooking on your gas grill for the first time, you will want to "burn off" the grill to eliminate any odor or foreign matter. Just ignite the burners, lower the Lid, and operate grill on the HIGH setting for 3 to 5 minutes.

Cooking Temperatures

High setting: Only use this setting for fast warm-up, searing steaks or chops and for burning food residue off the grill after cooking is complete. **Never** use the HIGH setting for extended cooking.

Medium to Low Settings: Most recipes specify medium to low settings, including all smoking and for cooking lean cuts such as fish.

NOTE: Temperature settings will vary with the temperature and the amount of wind outside your home.

Direct Cooking

The direct cooking method can be used with the supplied cooking grids and food placed directly over the lit grill Burners. **Direct cooking requires the grill lid to be up. The** method is ideal for searing and whenever you want meat, poultry or fish to have and open-flame barbecued taste. Deep frying and smoking are also best cooked in this manner because they require direct heat.

⚠ WARNING

Do not line the bottom of the grill housing with aluminum foil, sand or any substance that will restrict the flow of grease into the grease tray. Failure to comply with these instructions could result in a fire or explosion which could cause serious bodily injury, death, or property damage.

Indirect Cooking

To cook **indirectly**, the food should be placed on the left or right side of your grill with the burner lit on the opposite side. **Indirect cooking must be done with the Lid down.**

Flare-ups

The fats and juices dripping from grilled food can cause flare-ups. Since flare-ups impart a favorably, distinctive taste and color to food cooked cover an open flame, they should be accepted up to a point. Nevertheless, uncontrolled flaring can result in a ruined meal.

Replacing the Battery

If the LED do not light, the battery should be replaced.
Change the led battery
1.Find the battery box， open the lid.
2. Put 4pcs "AA" size battery, the positive and negative pole of the battery should keep the same as the pole in box.
3.Close the lid.

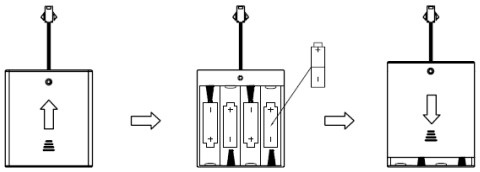

Correct Disposal of this product

This marking indicates that this product should not be disposed with other household wastes throughout the EU. To prevent possible harm to the environment or human health from uncontrolled waste disposal, recycle it responsibly to promote the sustainable reuse of material resources. To return your used device, use the return and collection systems or contact the retailer where the product was purchased. They can take this product for environmental safe recycling.



Grill Cooking Chart

WARNING: To ensure that it is safe to eat, food must be cooked to the minimum internal temperatures listed in the table below.

USDA* Safe Minimum Internal Temperatures	
Fish	145° F
Pork	160° F
Egg Dishes	160° F
Steaks and Roasts of Beef, Veal or Lamb	145° F
Ground Beef, Veal or Lamb	160° F
Whole Poultry (Turkey, Chicken, Duck, etc.)	165° F
Ground or Pieces Poultry (Chicken Breast, etc.)	165° F

* United States Department of Agriculture

FOOD	Weight or thickness	Temperature	Time	Special instructions and tips
Vegetables	NA	Medium	8 to 20 minutes	Slice or chop vegetables and dot with butter or margarine. Wrap tightly in heavy duty foil. Grill turning occassionally.
Potatoes	Whole	Medium	40 to 60 minutes	Wrap individually in heavy duty foil. Cook rotating occassionally.
Meat/Steaks	1/2 to 3/4 inches	High-Medium	4 to 15 minutes	Pre heat grill for 15-20 minutes then sear steaks on each side for two minutes. Next grill 3 to 5 minutes on each side or until desired doneness.
Ground Meats	1/2 to 3/4 inches	Medium	8 to 15 minutes	Grill turning once when juices rise to the surface or until desired amount of doneness. Do not leave hamburgers unattended since a flare-up could occur quickly.
Ribs	1/2 or full rack	Medium	20 to 40 minutes	Grill turning occassionally. During last few minutes brush with barbecue sauce, turn several times.
Hot dogs	NA	Medium	5 to 10 minutes	Grill turning four times. 2-4 minutes on each of four sides.
Poultry-Cut	1/4 to 1/2 pounds	Low or Medium	20 to 40 minutes	Grill turning occassionally. During last few minutes brush with barbecue sauce if desired, turn several times.
Poultry Whole	2 to 3 pounds	Low or	1 to 1-1/2 hours	Use poultry stand and brush frequently as desired
		Medium	40 to 60 minutes	Use poultry stand and brush frequently as desired
Fish	3/4 to 1 inch	Medium	8 to 15 minutes	Grill turning once to desired doneness. Brush with melted butter, margarine or oil.

Natural Gas Conversion

WARNING!

FAILURE TO HEED THESE WARNINGS COULD RESULT IN A FIRE OR EXPLOSION THAT COULD CAUSE SERIOUS BODILY INJURY, DEATH OR PROPERTY DAMAGE.

Natural Gas Conversion must be performed by a QUALIFIED GAS TECHNICIAN ONLY. The QUALIFIED GAS TECHNICIAN should ensure compliance of local codes, including but not limited to, requirements and installation of grill regulator. DO NOT ATTEMPT TO CONVERT YOURSELF. Improper conversion could result in a gas leak which could cause a fire or explosion and cause serious bodily injury, death or property damage. Leaks due to improper conversion could occur immediately or slowly over time. If you hear any unusual noises or leaks, smell gas or unusual odors, or notice anything unusual with the operation of your gas appliance after the installation, immediately shut off the gas supply and discontinue use until the appliance is repaired by a QUALIFIED GAS TECHNICIAN.

Model NO.41847NG Orifice Size

	Liquid propane(LP)		Natural Gas(NG)	
Components	Orifice Size	BTU	Orifice Size	BTU
Main Burner	1.02mm	12000	1.53mm	12000
Side Burner	1.02mm	12000	1.65mm	12000

Below parts are needed for natural gas conversion:

INCLUDED

- Natural gas orifices

NOT INCLUDED

- Quick Connector
- 10 ft. Natural Gas Hose
- 4” Water Column Regulator with Hose
- Tools
- 6 mm Nut Driver
- 6 mm Wrench
- Hex Key

Tools will be needed for gas conversion

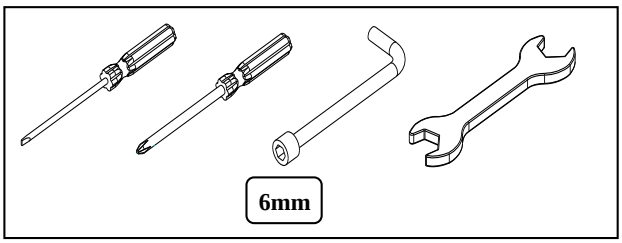

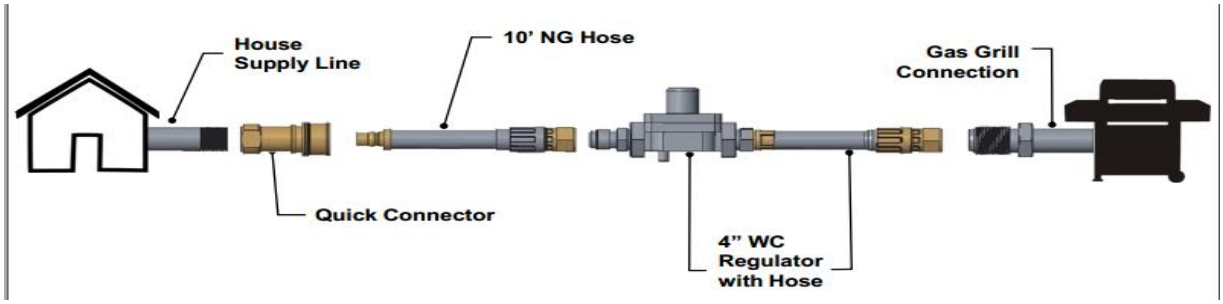

GAS CONVERSIONS

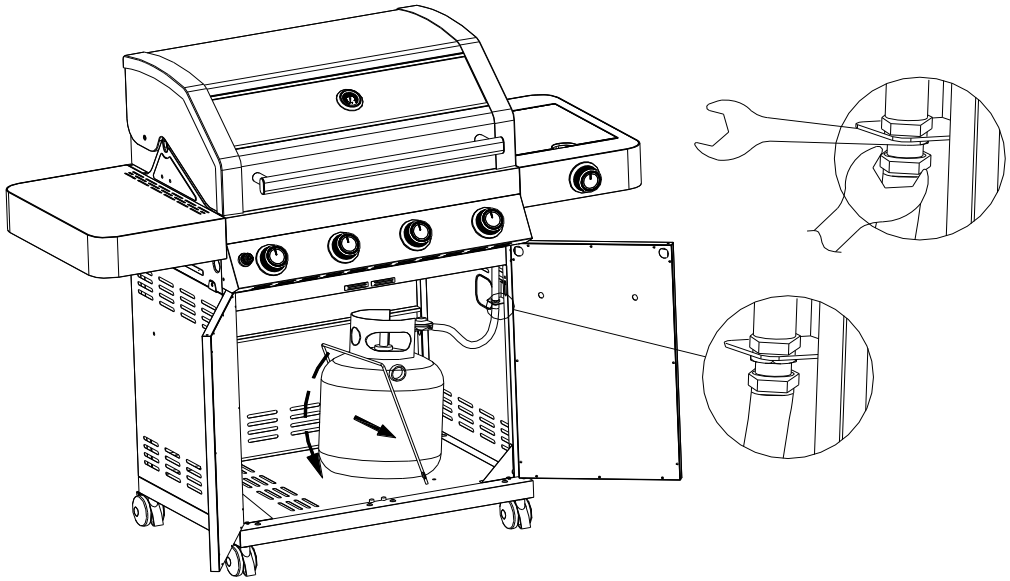

1. Turn off the main gas supply valve.
2. Disconnect LP gas fuel tank (if present).
3. Turn off all burner control valves.
4. Remove the LP gas fuel tank (if present) from the grill cart.
5. Use an adjustable wrench to remove the LP regulator from the manifold.

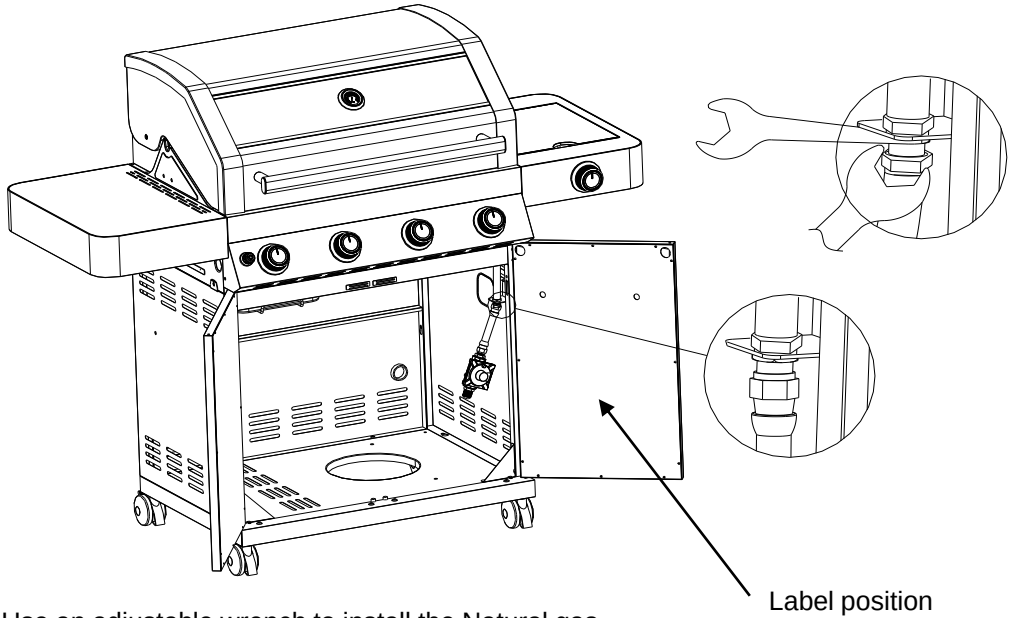

6.Use an adjustable wrench to install the Natural gas regulator hose to the manifold and secure. Attach the Natural gas regulator to the side panel inside the grill cart with the two screws that are preassembled on the regulator.

7.After LP is converted to NG, you need to put a label on the location shown above.

Make Gas Connection

1.Pass the NG hose to grill cart through the back panel

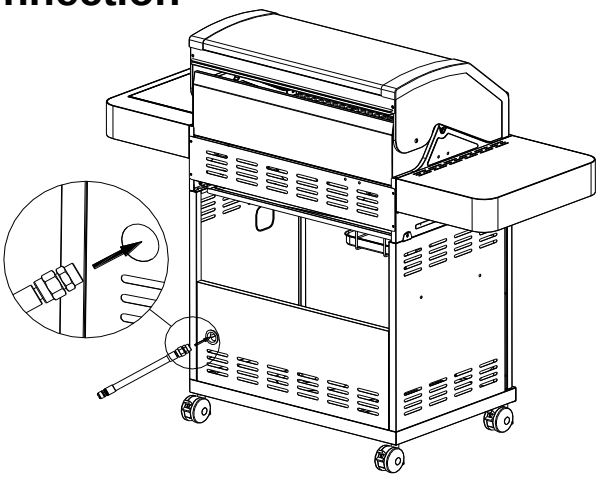

2.Connect the brass connector on one end of the 10 ft (3.0m) PVC flexible gas supply hose to the Natural gas pressure regulator

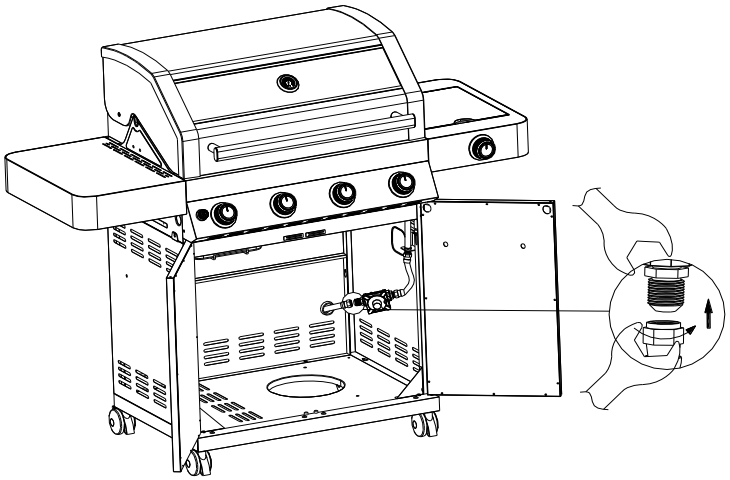

3.Connect the quick connector on the other end of the 10 ft. PVC flexible gas supply hose to the rigid natural gas supply pipe.
4.Remember to do leak test after conversion

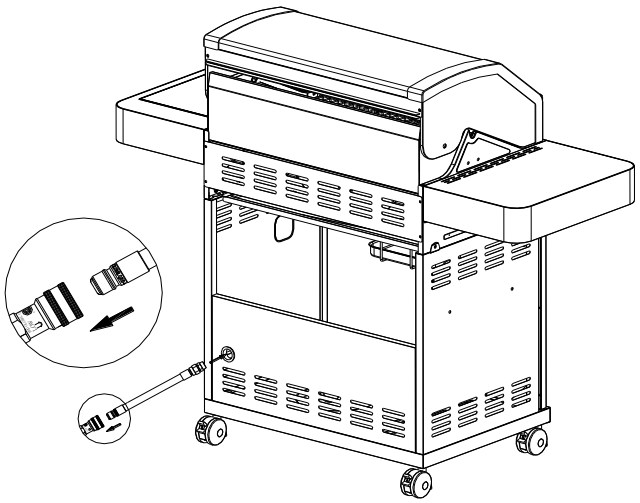

Change **Grill** Main Burner Valve Orifices

1. Remove the grates and flame tamers.
2. Push back the Clamp Spring which hold the burner in place,the clamp spring will drop off to grease tray or grill cart
3.Remove the burner from the grill by lifting the burner out

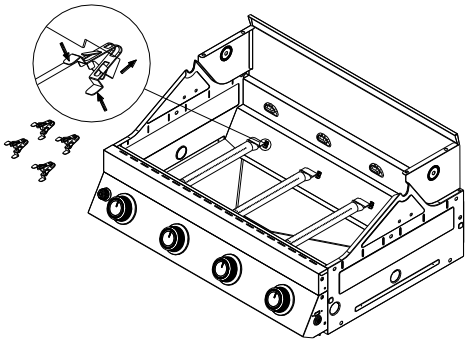

4:Use a 6 mm socket and wrench or 6 mm nut driver to remove the brass orifice from the end of gas valve.

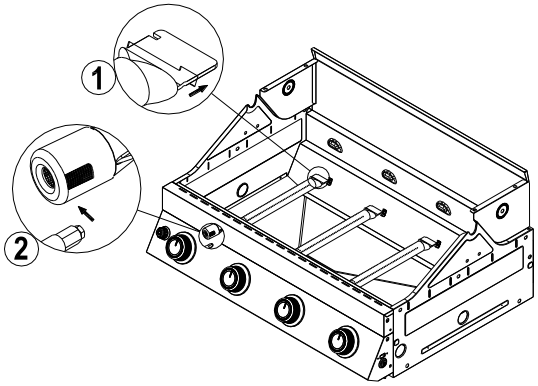

5.Replace with the Natural gas orifice.

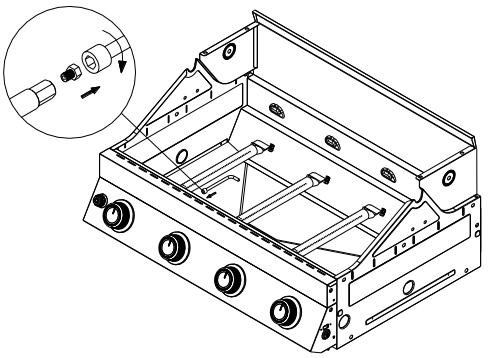

6.Reinsert the burner and reattach using the Clamp Spring previously removed. Repeat the procedure for each main burner

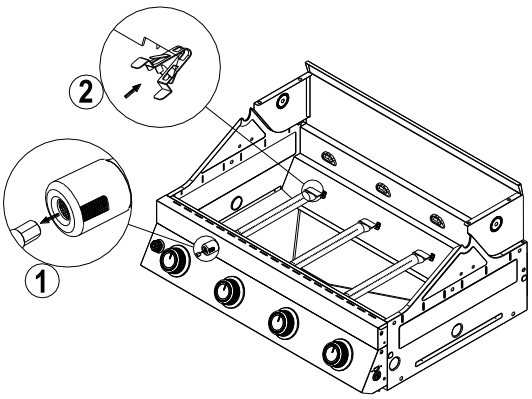

Change the Side Burner Orifice

1:Remove the LP Side Burner Orifice,and install the NG Side Burner Orifice

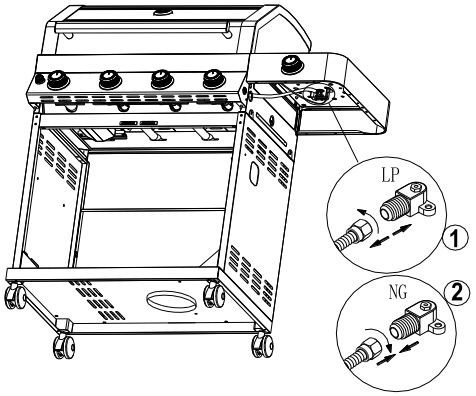

Adjust High/Low Flame Setting Screw

1:Remove all the control knobs

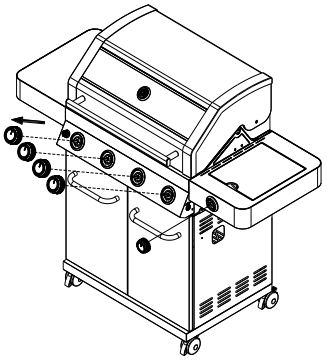

2:Use a flat-blade screwdriver to turn the high flame setscrew clockwise approximate 90º

3:Check that burner operates at the new high flame setting. It may be necessary to adjust the screw setting slightly more to get the ideal burner flame height

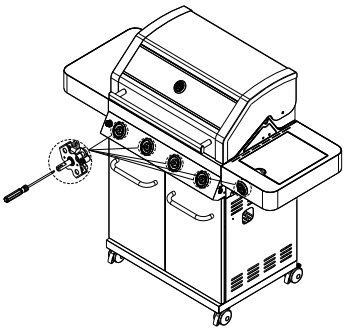

4:Replace the control knob and turn off the burner

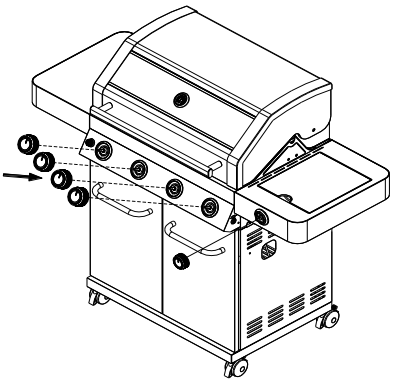



WWW.MONUMENTGRILLS.COM

Product Registration Card

It is simple! Complete and mail your Product Registration Card with the Copy of the Receipt today!

Last name: _____ First Name: _____

Address: _____ City: _____ State: _____

Zip: _____ Phone: _____

Email: _____ Place of purchase: _____

Model Number: _____ Serial Number: _____

Date of Purchase: _____

Please return your Product Registration Card today to validate the warranty service

WWW.MONUMENTGRILLS.COM

Carte d’enregistrement du produit

C’est facite!Remplissez et postez carte d’enregistrement du prodduit des aujourd’hui avec une copie du ticket de caisse!

Nom de famille: _____ Prenom: _____

Adresse:_____Ville:_____ Province: _____

Code postal: _____Telephoner: _____

Adresse courriel: _____ Lieu d’achat: _____

Numero de modele: _____ Numero de serie: _____

Date d’achat: _____

Por favor,devuelva su tarjeta de registro de product hoy para validar el servicio de garantia

WWW.MONUMENTGRILLS.COM

Tarjeta de registro del product

Es simple!Liene y envie su Tarjeta de inscripcion del prodcto hoy con la copia del comprobante de recibot

Apellido: _____ Primer nombre: _____

Dereccion: _____Ciudad: _____Estado: _____

Codigo postal: _____ Liame(Opcinal): _____

Lugar de compra: _____

Numero del modelo: _____Numero de serie:

La fecha de Compra: _____

Envie su tarjeta de inscripcion del product hoy mismo pour valider la garantie