CHEFMAN®

Crema Supreme™
Espresso Machine

RJ54-G-SS

Get to Know Your Espresso Machine

1. Control panel
2. Integrated conical burr grinder
3. Coffee bean hopper
4. Cup warming tray (with tamper storage groove)
5. Removable water tank
6. Steam/Hot Water knob
7. Swiveling steam wand
8. Tamper
9. Milk pitcher
10. Cleaning brush
11. Portafilter pipe cleaner
12. Cleaning pin
13. Brew head
14. Removable drip tray
15. Accessory storage space (below drip tray)
16. Double-shot portafilter basket
17. Single-shot portafilter basket
18. Grinding funnel
19. Portafilter
20. Grinder activation switch
21. Grinder outlet

READ ALL INSTRUCTIONS BEFORE USE

For your safety and continued enjoyment of this product, always read the instruction manual before using.

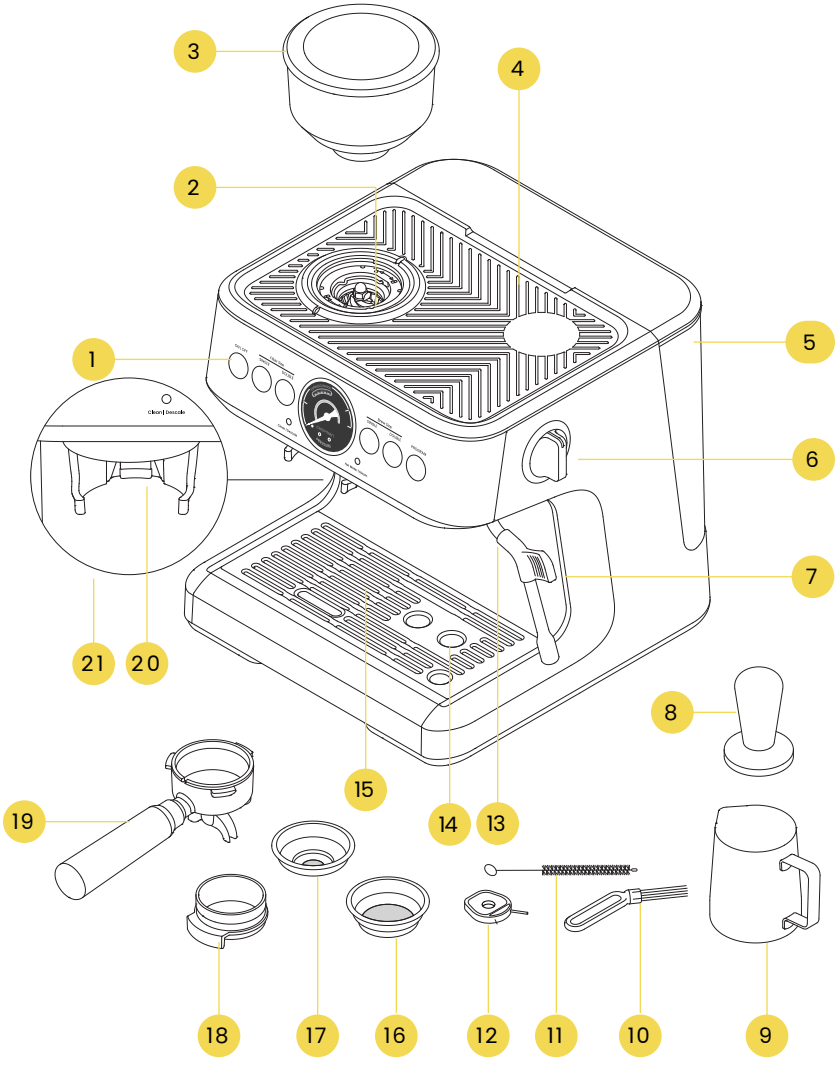
3
4
2
1
5
6
7
21
20
8
15
19
14
13
18
17
16
12
11
10
9

Control Panel

1. ON/OFF button
2. SINGLE Filter Size button (for grinding)
3. DOUBLE Filter Size button (for grinding)
4. Clean/Descale indicator light
5. Brewing pressure gauge
6. Hot Water/Steam indicator light
7. SINGLE Brew Size button
8. DOUBLE Brew Size button
9. PROGRAM button

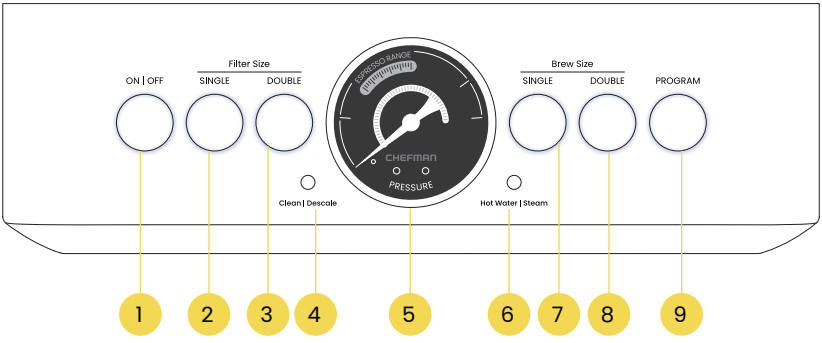

Scan here for a quick video tour of all the features and accessories on your Crema Supreme™ Espresso Machine.

SAFETY INSTRUCTIONS & IMPORTANT SAFEGUARDS

WARNING: When using electrical appliances, basic safety precautions should always be followed, including:

1. Read all instructions.
2. Do not touch hot surfaces. Use handles or knobs.
3. To protect against fire, electric shock and injuries to persons, do not immerse cord, plug charging base, or unit in water or other liquid.
4. Close supervision is necessary when any appliance is used by or near children.
5. Unplug from outlet when not in use and before cleaning. Allow to cool before putting on or taking off parts, and before cleaning the appliance.
6. **Do not** operate any appliance with a damaged cord or plug or after the appliance malfunctions, or has been damaged in any manner. If this should occur, contact Chefman Customer Service.
7. The use of accessory attachments not recommended by Chefman may result in fire, electric shock, or injury to persons.
8. **Do not** use outdoors.
9. **Do not** let cord hang over edge of table or counter, or touch hot surfaces.
10. **Do not** place on or near a hot gas or electric burner, or in a heated oven.
11. To disconnect, turn any control to off, then remove plug from wall outlet.
12. **Do not** use appliance for other than intended use.
13. Scalding may occur if the brew chamber is opened during heating cycle.
14. Avoid contact with moving parts.
15. Check grinder basket for presence of foreign objects before using.
16. Use the coffee grinder to grind roasted coffee beans only. Grinding other substances, such as nuts, spices or unroasted beans may dull the blade and cause poor grinding or injury.
17. **Do not** operate the grinder without the hopper lid in position. Keep fingers, hands, hair, clothing, and utensils away from the hopper during operation.
18. The temperature for operating or storing the appliance shall be higher than 32°F.

SAFETY INSTRUCTIONS & IMPORTANT SAFEGUARDS

SAVE THESE INSTRUCTIONS FOR HOUSEHOLD USE ONLY

WARNING: Improper use of the grounding plug can result in electric shock.

Grounding Instructions
This appliance must be grounded. In the event of an electrical short circuit, grounding reduces the risk of electric shock by providing an escape wire for the electric current. To protect against electrical shock, this appliance is equipped with a cord having a 3-prong grounding-type plug for insertion into a proper grounding-type electrical outlet. Do NOT alter the plug for use in a 2-prong outlet. If the plug will not fit into an outlet, have a proper outlet installed by a qualified electrician.

Do NOT alter the plug for use in a 2-prong outlet. If the plug will not fit into an outlet, have a proper outlet installed by a qualified electrician.

Short Cord Instructions

A short power-supply cord is provided to reduce the hazards of entanglement or tripping over a longer cord. Longer detachable power-supply cords or extension cords are available and may be used if care is exercised in their use. If a longer detachable power-supply extension cord is used:

1. The marked electrical rating of the extension cord should be at least as great as the electrical rating of the appliance;
2. If the appliance is of the grounded type, the extension cord should be a grounding-type 3-wire cord; and
3. The longer cord should be arranged so that it will not drape over the countertop or tabletop where it can be pulled on by children or tripped over.

SAFETY INSTRUCTIONS & IMPORTANT SAFEGUARDS

Power Cord Safety Tips

1. Never pull or yank on the cord or the appliance.
2. To insert the plug, grasp it firmly and guide it into the outlet.
3. To disconnect the appliance, grasp the plug and remove it from the outlet.
4. Never use the product if the power cord shows signs of abrasion or excessive wear. Contact Chefman® Customer Support for additional guidance and support.
5. Never wrap the cord tightly around the appliance, as this could place undue stress on the cord where it enters the appliance and cause it to fray and break.

DO NOT OPERATE THE APPLIANCE IF THE POWER CORD SHOWS ANY DAMAGE OR IF THE APPLIANCE WORKS INTERMITTENTLY OR STOPS WORKING ENTIRELY.

California Proposition 65:
(Applicable for California Residents only)
WARNING: Cancer and Reproductive Harm
www.P65Warnings.ca.gov

Do not place the appliance on a stovetop or any other heatable surface, even if stovetop is not on. Doing so is a fire hazard.

How to Use the Espresso Machine

Before First Use

1. Remove all packaging materials and check to ensure that all parts and accessories are accounted for. Read and remove all stickers, except for the rating label, which should remain on the unit.
2. Remove and hand wash the water tank, portafilter, portafilter baskets, tamper, drip tray, and milk pitcher with a mild detergent and water. Rinse and dry well. Do not use abrasive cleansers or pads, which can damage the surface of the parts. Do not immerse the unit housing, power cord, or plug in water or any other liquid.

Fill & Install the Water Tank

1. Fill the tank with cool, preferably filtered, water.
2. Place the tank on the back of the unit, ensuring it's securely in place.

Fill the Hopper & Set Grind Size

The unit offers 30 grind sizes, allowing you to achieve the perfect extraction. We recommend using 100% arabica coffee beans, preferably a dark espresso-style roast. For the best results, use coffee beans as soon as possible after they are roasted and grind them just before using.

1. Ensure the hopper is locked into place; if not, twist clockwise until the notch on the base of the top cover aligns with the tick marks on the hopper.
2. Remove the lid and fill the hopper with about 1 oz of coffee beans. Replace the hopper lid.
3. Place a container below the grinder chute. Plug in the unit and press the **ON/OFF** button to turn it on. Press the **DOUBLE** Filter Size button until all the beans are ground, then discard the grounds (this removes any packing debris from the interior of the grinder).
4. To adjust the grind size, rotate the hopper until the notch on the top cover aligns with your chosen size marking on the hopper, from fine to coarse. We recommend grind size 12 to start, and you can adjust as needed based on your results.
5. When the grind size is set, fill the hopper with fresh beans before use. A minimum of 2 oz of beans are needed for proper unit operation.

Prime & Flush the Espresso Maker

1. Place a large heatproof cup on the drip tray below the brew head.
2. Press the **DOUBLE** Brew Size button and “brew” a cup of plain water to clean any debris from the water lines. We also recommend doing this as a first step to warm the brew head and internal parts when the unit has been unused for several hours.
3. Discard the water and repeat.
4. Position the tip of the steam wand over the drip tray and turn the knob to **HOT WATER**. Let the hot water run for a few seconds to clean the wand interior.

Quick Start

How to Grind & Tamp Coffee

1. Ensure that the water tank is filled and installed, and the hopper is filled with fresh coffee beans. Plug in the unit and press the **ON/OFF** button to turn it on.
2. Choose a portafilter basket (single- or double-shot) and snap it into the portafilter. If desired, place the grinding funnel over the portafilter and basket. The funnel prevents grounds from escaping from the basket during the grinding process, especially useful when grinding the double-shot amount.

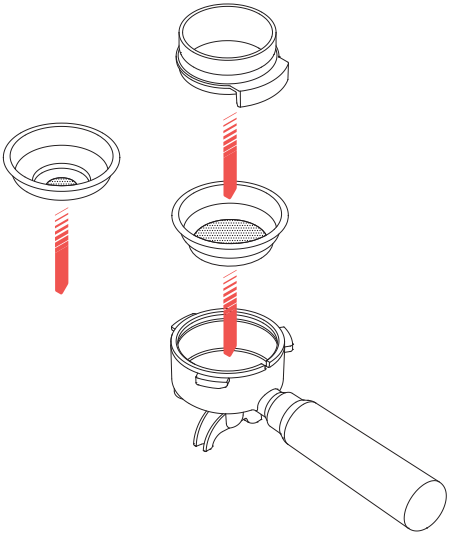

3. Slide the portafilter under the grinder outlet, with the lip of the basket just above the grinder arms.

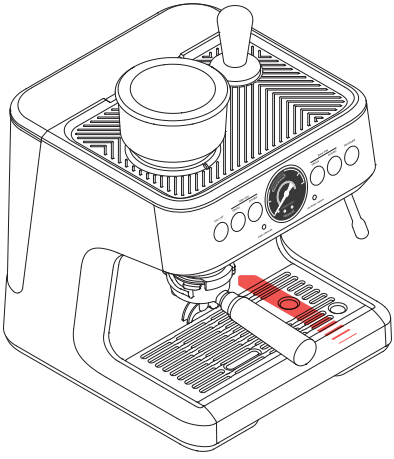

4. Press **SINGLE** or **DOUBLE** Filter Size button. The unit will automatically grind the correct amount of coffee for the size you've chosen, but you can customize to adjust the amount if you wish (see p. 17).

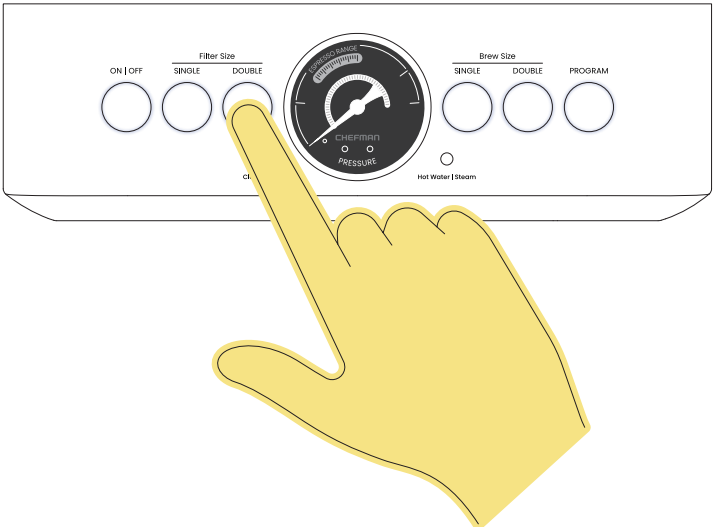

5. When the grinder stops, remove the portafilter. Remove the grinding funnel, if used, and rest the portafilter's rubber base on a flat surface. Holding the handle with one hand, use the other hand to firmly tamp the coffee with the tamper.

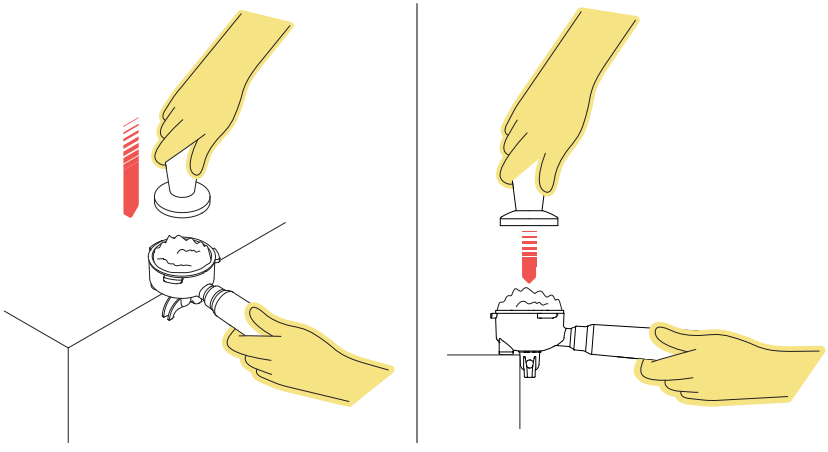

6. It may take some practice to tamp the coffee with just the right amount of pressure. Be sure to apply even pressure across the whole surface of ground coffee. As a rule of thumb, the top of the tamper “cap” should end up aligned with the top edge of the portafilter basket.

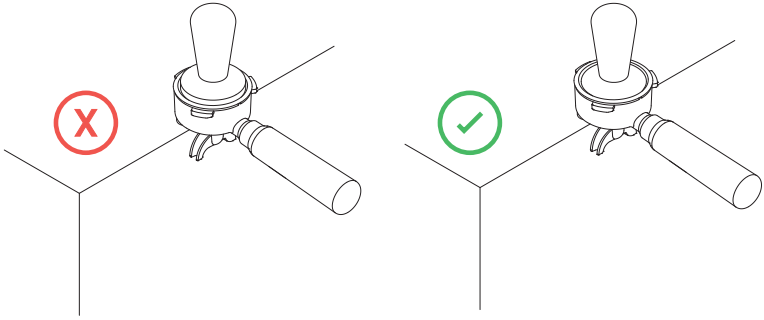

7. Wipe any excess coffee grounds from the rim of the portafilter basket.

How to Brew Espresso

1. With the handle pointing at an angle to the left, insert the portafilter up into the brew head.

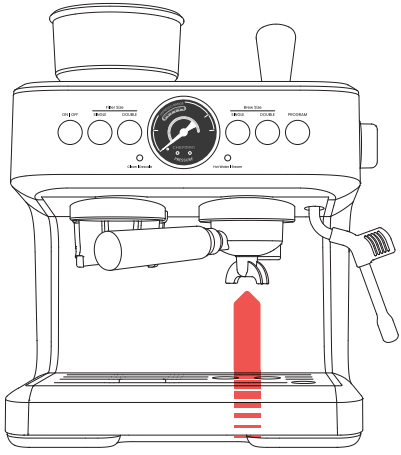

2. Turn the handle to the right to lock it into place. When the portafilter is fully locked, the handle will point straight forward.

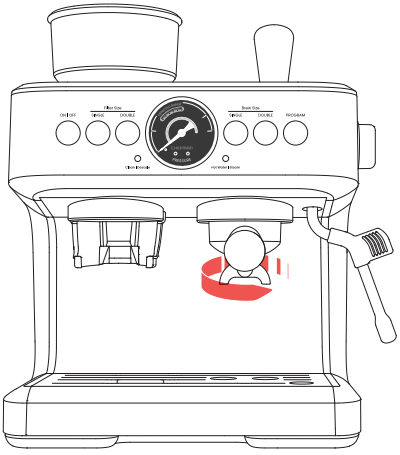

3. When all the lights around the buttons turn solid, the unit is preheated and ready to brew. Place a cup below the brew head and press the **SINGLE** or **DOUBLE** Brew Size button, corresponding to the basket size used.

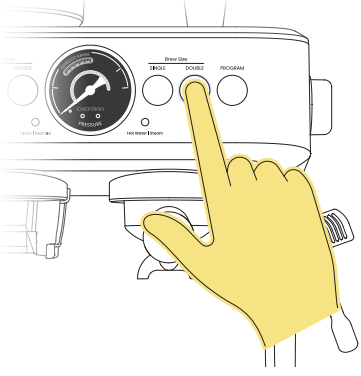

4. After a few seconds, espresso will begin flowing from the brew head. The unit will stop after the preset shot volume has been extracted. To stop brewing mid-cycle, press your selected brew button again. You can also re-program the volume of espresso extracted with the preset buttons (see p. 17). **NOTE:** The amount of espresso extracted in the cup will vary depending on your tamping pressure, grind size, and grind amount, as well as water volume and temperature settings.

5. When finished brewing, remove the portafilter and immediately discard the spent grounds. Turn the portafilter upside down over a waste container and give it a good hard tap; the basket doesn't fall out easily. Remove the basket from the portafilter using the flat end of the cleaning brush tool and immediately rinse both with hot water.

6. After brewing the unit will return to standby mode. After 15 minutes in standby mode, the unit will go into sleep mode. (This can be adjusted, see p. 19.)

How to Steam & Froth Milk

When making steamed-milk drinks such as cappuccinos and lattes, we recommend steaming the milk first, then pulling the espresso shot so that the espresso is as fresh and hot as possible. To maintain high quality and temperature standards, the unit only allows one function at a time—brewing or steaming.

1. Fill the milk pitcher no more than 2/3 full with cold milk. You can use any type of dairy or non-dairy milk, although milk with some fat content produces the best froth. For the best results with plant-based milks, look for those specifically designed for coffee drinks.
2. Swivel the steam wand so the tip is over the drip tray. With the unit turned on, turn the Steam/Hot Water knob to **STEAM**. The **ON/OFF** light and the Steam/Hot Water light will blink as the unit heats. **NOTE:** While the boiler heats, a small amount of water may purge from the wand. This is normal.
3. When the **ON/OFF** light stops blinking, the unit is ready. Briefly turn the Steam/Hot Water knob back to **OFF**. The Hot Water/Steam light will turn off.
4. Swivel the steam wand out to the side of the machine and raise the milk pitcher under it until the tip of the wand is just submerged beneath the surface of the milk. Quickly turn the Steam/Hot Water knob back to **STEAM**. The Hot Water/Steam light will start blinking again (pausing the steam like this prevents splatter when the wand is inserted into the milk).

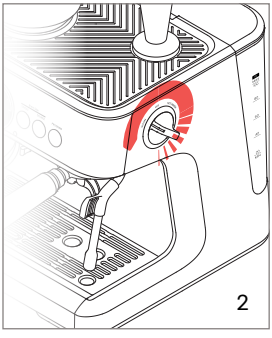

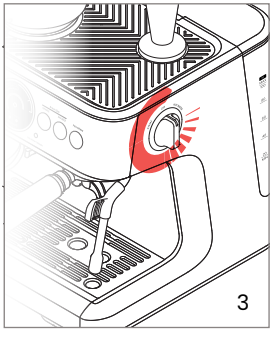

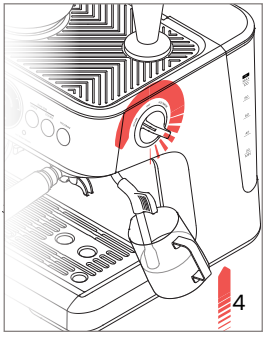

5. As the unit steams, keep the tip of the wand just below the surface of the milk to introduce air, slowly lowering the pitcher as the volume increases. When the froth reaches the desired volume, submerge the wand deeper to continue heating.

6. When the milk reaches 140-150°F (the pitcher will be hot to the touch), return the Steam/Hot Water knob to the **OFF** position and remove the wand from the milk. Tap the pitcher on the counter to pop any big bubbles, then swirl it to even the texture of the milk.
7. Immediately wipe down the steam wand with a damp cloth.
8. Position the tip over the drip tray and briefly turn the knob to **HOT WATER** to clean out the inside.

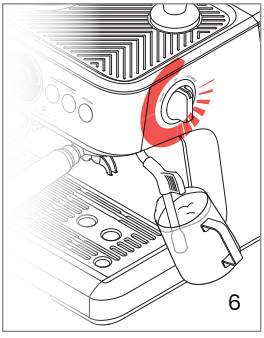

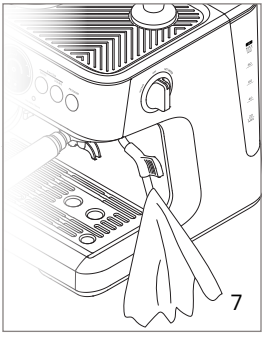

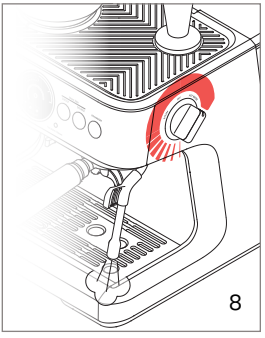

How to Make Hot Water

The steam wand also produces hot water, perfect for warming your cup before brewing or making an Americano.

1. With the unit heated and in standby mode, position the tip of the steam wand over the drip tray. Place an empty cup (or cup of espresso, if making an Americano) under the wand.
2. Turn the Steam/Hot Water knob to the **HOT WATER** position. The Hot Water/Steam light will start blinking.
3. When you are finished dispensing water, turn the Steam/Hot Water knob to its **OFF** position.

Scan here for a video tutorial on the art of steaming and frothing milk.

Perfecting Your Espresso

The key to a delicious cup of espresso is getting the extraction pressure right. Watch the gauge while your espresso is brewing and make sure it is in the "Espresso Range." If you're not achieving the ideal extraction, you should start by adjusting the grind size used, and adjusting the compression pressure as you tamp the grounds in the basket. If you are still not achieving perfect extraction, you can adjust the parameters of grind time, shot volume, and extraction temperature, as detailed after the chart. See also p. 8 for adjusting the grind size.

	Under Extracted	**Perfect Extraction**	**Over Extracted**
Flavor	Acidic, weak flavor	Rich, smooth flavor	Bitter, burnt flavor
Color	Pale brown	Deep brown	Black-brown
Flow rate	Fast flow, like water	Slow but steady flow, like syrup or cream	Coffee drips from brew head
Extraction time	20 seconds or less	25-40 seconds*	More than 45 seconds
Crema	Thin, pale crema	Fine, mousse-like, and tan	Dark, spotty crema
Solutions	Increase grind amount		Decrease grind amount
	Adjust grind size finer		Adjust grind size coarser
	Increase brew temperature		Decrease brew temperature
	Tamp grinds harder		Tamp grinds with less pressure

*A double shot takes longer, but will not be twice the time of a single.

Scan here for video tips on how to customize the extraction of your espresso.

How to Adjust Grind Time

The unit's default grind time is about 9 seconds for a single shot (but can be adjusted from 5 to 13 seconds) and 13 seconds for a double shot, (but can be adjusted from 10 to 18 seconds). Changing grind time will change the amount of ground coffee used for your brew. To adjust the grind time:

1. Press and hold either the **SINGLE** or **DOUBLE** Filter Size button. That button and the **PROGRAM** button will start to blink and the grinding will begin.
2. When you've reached the desired grind time, release the button you're holding. Grinding will stop, the unit will beep once, the **PROGRAM** button will flash four times, and the new time will be saved.
3. Alternatively, If you'd like to set the grinder to a preferred weight of coffee, place a cup on a scale under the grinding outlet and zero out the scale. Press and hold your chosen Filter Size button as above, then grind until you reach your desired weight, and release the button.
4. To return the grinding time to factory settings: Press and hold either the **SINGLE** or **DOUBLE** Filter Size button AND the **PROGRAM** button. After the unit beeps twice, release the buttons. The unit will be reset to factory-programmed grinding time.

NOTE: When using a coarser grind, it is typical for the amount of ground coffee dispensed to exceed the portafilter basket area. Do not attempt to insert an overfilled portafilter into the brew head. Whatever can't be tamped down to be level with the edge of the portafilter must be removed.

How to Adjust Single and Double Shot Volume

The unit's default brew volume is about 30 ml for a single shot (can be adjusted from 20 to 150 ml) and 60 ml for a double dose (can be adjusted from 20 to 250 ml).
To adjust the volume:

1. Press and hold either the **SINGLE** or **DOUBLE** Filter Size button. That button and the **PROGRAM** button will start to blink and the brewing will begin.
2. When you've reached the desired volume, release the button you're holding. Brewing will stop, the unit will beep once, and the new time will be saved.
3. To return the brew volume to factory settings: Press and hold either the **SINGLE** or **DOUBLE** Filter Size button AND the **PROGRAM** button. After the unit beeps once and those lights flash twice, release the buttons. The unit will be reset to factory-programmed brewing volume.

How to Adjust Brewing Temperature

The brewing temperature is not the final temperature of your drink; there are many factors that affect the actual drink temperature, including grind size, weight of the dose, and tamping pressure. Note, too, that making this adjustment does not *only* change the temperature of your finished drink, but can also affect the extraction of your espresso. See "Perfecting Your Espresso" on p. 16, for more information. If you wish to only make your drink hotter, you can preheat the cup and portafilter (see instructions below). Default brewing temperature is 198ºF (92ºC) . To change it:

Press and hold the **PROGRAM** button for 3 seconds, the machine will beep and the button will flash. Then choose one of the following:

- Press the **SINGLE** Filter Size button to adjust the temperature to 194ºF (90ºC).
- Press the **SINGLE** Brew Size button to adjust temperature to 201ºF (94ºC).
- Press the **DOUBLE** Brew Size button to adjust temperature to 205ºF (96ºC).

After setting the above temperatures, press the **PROGRAM** button again, the unit will beep once and return to standby mode. The unit will go back to standby (and save your changes) after 1 minute if no buttons are pressed.

To reset to the factory default of 198ºF (92ºC), hold and press the **PROGRAM** button for 3 seconds as above, and then Press the **DOUBLE** Filter Size button, followed by the **PROGRAM** button again.

To Preheat Your Cup and Portafilter Before Brewing

1. Once the unit is powered on and preheated, place the portafilter (with desired portafilter basket) without coffee into the brew head. Place the serving cup underneath. Brew a double shot. Keep the hot water in the cup and set aside. Alternatively, the cup can be heated with "cleaner" water from the **HOT WATER** setting of the steam wand, but this does not preheat the portafilter.
2. Dry the heated portafilter, then grind coffee, fill the basket, and tamp following instructions on p. 10-12.
3. Prepare the steamed milk, if using.
4. Drain the water from the cup and dry it.
5. Brew espresso following instructions on p. 12-13

How to Reset Standby Time
Default standby time (the time the unit will wait in standby mode before it turns off) is 15 minutes. To adjust this time:

Press and hold **PROGRAM, DOUBLE** Filter Size, and **DOUBLE** Brew Size buttons for 3 seconds. The **PROGRAM** light will begin to blink.

- Press the **SINGLE** Filter Size button to adjust the standby time to 10 minutes.
- Press the **DOUBLE** Filter Size button to adjust the standby time to 20 minutes.
- Press the **DOUBLE** Brew Size button to adjust the standby time to 29 minutes.

After setting the time, press the **PROGRAM** button again, the unit will beep once and return to standby mode with changes saved.

Recommended Grind and Brew Parameters

Dose weight**	12g (single) 20g (double)
Brewing Temperature	198ºF (92ºC)
Grind Size	12

*** *These weights are recommended to produce a dose volume of approximately 30 ml (single) and 60 ml (double)**

How to Reset to ALL Factory Defaults
With the unit in standby mode, press and hold the **ON/OFF** button and the **PROGRAM** button. The unit will beep once and all lights will flash twice, indicating that any custom settings have been cleared.

Guide to Espresso Drinks

Espresso
An intense, small dose (single or double shot) of coffee, served in a small demitasse cup.

Ristretto
A very short and intensely flavored shot of espresso—about half the volume (15 ml) of a typical shot. To make a ristretto in this unit, press the brew size button halfway through brewing to cut cycle short.

Americano (at left)
A single or double shot of espresso diluted with hot water so that the intensity is similar to American brewed coffee.

Macchiato
A single or double shot of espresso "marked" with a dollop of milk foam. Not to be confused with a latte macchiato, which is mainly steamed milk marked with a little espresso.

Affogato
A quick, heavenly dessert consisting of a shot (or two) of espresso poured over ice cream—traditionally vanilla but, caramel, chocolate, or hazelnut are other delicious choices.

Cappuccino
Named for capuchin monks and their signature brown robes, this drink consists of one third espresso, one third steamed milk, and one third foamed milk, often dusted with cinnamon and cocoa.

Latte
A single or double espresso in a large cup of steamed milk, capped with a thin layer of foam. Also delicious over ice, using cold milk instead of steamed.

Caffe Mocha
Give your latte a chocolate twist by stirring chocolate syrup into the milk after steaming. Use a bit less milk foam than a cappuccino, but top with whipped cream and chocolate shavings, if desired.

Keep It Clean

How to Clean After Each Use

Perform a few simple steps each time you use the espresso machine to keep it in top condition:

1. Rinse the portafilter and baskets in hot water immediately after use. If there are coffee grounds stuck in the holes of the basket, use the pin end of the cleaning tool to remove them.
2. Wipe the underside of the brew head with a damp cloth or paper towel to remove any stray coffee grounds. Place a large heatproof cup under the brew head and run a double-shot cycle with water only (no portafilter in place) to purge any grounds stuck in the brew head.
3. Remove the drip tray. Wash it (as well as the milk pitcher, if used) in hot, soapy water. Wipe the drip tray and the storage tray clean with a soft, damp cloth.
4. If the steam wand is used to steam milk, wipe it down immediately with a soft, damp cloth. Then position the tip over the drip tray and briefly turn the Steam/Hot Water knob to **HOT WATER** to clean the inside of the wand.
5. If the steam wand tip becomes blocked, turn off the machine and let it cool down. Use the pin end of the cleaning tool to clear the blockage. If necessary, you can remove the tip of the wand by twisting it clockwise, then soak it in hot water until the blockage can be removed.
6. Wipe down the outer housing and cup warming tray with a soft, damp cloth. Do not use abrasive cleansers, pads or cloths which can scratch the surface.
7. If storing the machine long term, be sure that the Steam/Hot Water knob is in the **OFF** position, remove the coffee beans from the hopper and clean the grinder (see instructions that follow), and empty the water tank. Store all accessories in the storage compartment.

Scan here for a video tutorial on how to clean your espresso machine

Cleaning the Grinder

Periodically you'll need to clean the grinder's upper and lower burrs to remove the oils and fine particles of coffee, which can interfere with the grinder's performance. **WARNING:** The burrs are extremely sharp. Use caution when handling and cleaning them.

1. With the power off, turn the hopper counterclockwise and lift off the unit.
2. Remove the remaining beans above the burrs. There are two ways to do this: either vacuum them out with a hand-held vacuum and hose attachment; or empty the hopper and return it to the unit, grind until nothing more comes out of the grinder, and remove the hopper again.
3. Remove the upper burr: Using the wire handle, turn counterclockwise, then lift the upper burr straight up from the lower burr.
4. Use the included brush to clean three areas of the grinder: the upper burr, lower burr, and the grounds dispensing chute.
5. Place the upper burr back in position above the lower burr, and lock by twisting clockwise. Re-install the hopper.

Descaling the Unit

Over time, deposits from dissolved calcium and other minerals will build up in the unit and affect the operation. Descaling removes these deposits to return it to peak function. The frequency of descaling depends on the hardness of your water. When the Clean/Descale light blinks upon powering up the unit (after about 300 uses), it is time to descale. **NOTE:** when the Clean/Descale light comes on, you can still operate the unit, but the alert light will not turn off until a cleaning/descaling cycle is run. We recommend performing descaling every 4-6 months.

1. Prepare a commercial descaling solution according to package directions.
2. Add the solution to the water tank.
3. Place two large cups under the brew head and steam wand.
4. Simultaneously press the **SINGLE** shot, **DOUBLE** shot, and **PROGRAM** buttons to enter descaling mode. (If no further action is taken in 60 seconds, the unit will exit descaling mode.)
5. Turn the Steam/Hot Water knob to **STEAM**. Water will dispense from both the brew head and the steam wand for about 2 minutes.
6. When the Clean/Descale and Steam/Hot Water lights blink rapidly and the unit beeps, step 1 is done.
7. Turn the knob to **OFF**, wipe the brew head and steam wand with a damp cloth, and empty the water tank and refill with clean water. (If the knob is not turned off, the unit will automatically exit descaling mode after 5 minutes).
8. Empty the cups and then place them back under the brew head and steam wand.
9. Turn the knob to **HOT WATER**. Water will again dispense from both the brew head and the steam wand for about 2 minutes.
10. When the Clean/Descale and Steam/Hot Water lights blink rapidly and the unit beeps, step 2 is done. Turn the knob to **OFF** and empty the cups. The unit will return to Standby mode.

Having Trouble?

Problem	Likely Cause	Solution
Machine does not heat up STEAM/HOT WATER light is flashing when machine is powered on	STEAM/HOT WATER knob is not in the OFF position.	Turn knob to OFF position. The unit will begin preheating.
	Water tank is empty.	Fill water tank.
	Water tank is not properly installed.	Ensure tank is properly seated on the unit and locked into place.
	Unit needs descaling.	Follow descaling procedure on p. 24.
	If water flows but unit doesn't produce steam; the steam wand may be blocked.	Clean the steam wand, following instructions on p. 22.
Espresso runs out around the sides of the portafilter	Portafilter is not inserted correctly or fully locked on the unit.	Make sure the portafilter is correctly inserted and rotated until you feel resistance and the handle points straight forward.
	There are coffee grounds on the rim of the portafilter basket.	After tamping, wipe away any excess grounds from the rim.
	There's too much coffee in the basket.	Adjust dose size and/or make sure you're using the proper size basket.
Coffee drinks are not hot enough	Cups are cold.	Rinse cups with hot water and place on heating tray.
	Portafilter is cold.	Rinse portafilter with hot water and dry thoroughly before using.
	Milk wasn't steamed for long enough (for a cappuccino or latte).	Steam the milk until the base of the milk pitcher is hot to the touch.
	Water temperature is not set high enough.	Adjust water temperature according to instructions on p. 18.
	Unit needs descaling.	Follow descaling procedure on p. 24.
Unit is on but stops operating	Unit went into overheat protection mode.	Press the ON/OFF button to turn the unit off and unplug from the power outlet. Allow to cool for about 30–60 minutes. If the problem persists, contact Chefman Customer Support.
No or little ground coffee coming from grinder	Not enough coffee beans in the hopper.	Fill the hopper with fresh coffee beans.
	Grinding chamber or chute is blocked.	Clean grinder and chute according to directions on p. 23.

Terms & Conditions

Limited Warranty
RJ Brands, LLC d/b/a Chefman® offers a limited 1-year Warranty (the "Warranty") available on sales through authorized distributors and retailers only. Please note that this Warranty becomes valid from the date of initial retail purchase and that the Warranty is nontransferable and applies only to the original purchaser.

This Warranty is void without proof of purchase within the United States and Canada. Please be aware that this Warranty supersedes all other warranties and constitutes the entire agreement between the consumer and Chefman®. Any changes to the Terms and Conditions of this Warranty must be in writing, signed by a representative of Chefman®. No other party has the right or ability to alter or change the Terms and Conditions of this Warranty.

We may ask you to please submit, via email, photos and/or video of the issue you are experiencing. This is to help us better assess the matter and possibly offer a quick fix. Photos and/or video may also be required to determine Warranty eligibility.

We encourage you to register your product. Registering can make the Warranty process easier and can keep you informed of any updates or recalls on your product. To register, follow the directions on the Chefman® Warranty Registration page in the Chefman® User Guide. Please retain your proof of purchase even after registering. In the event that you do not have proof of your purchase date, we may declare your Warranty void or we may, at our sole discretion, apply the date of manufacture as the purchase date for purposes of this Warranty.

What the Warranty Covers

- **Manufacturer Defects -** Chefman® products are warranted against defects in material and workmanship, under normal household use, for a period of 1 year from the date of purchase when used in accordance with the directions listed in the Chefman® User Guide. If your product does not work as it should, please contact Customer Support at support@chefman.com so that we may assist you.

This Warranty Does Not Cover

- **Misuse**
  Damage that occurs from neglectful or improper use of products, including, but not limited to, damage that occurs as a result of usage with incompatible voltage, regardless of whether the product was used with a converter or adapter. See Safety Instructions in the Chefman® User Guide for information on proper use of product;

- **Poor Maintenance**
  General lack of proper care. We encourage you to take care of your Chefman® products so that you may continue to enjoy them. Please see Keep It Clean directions in this Chefman® User Guide for information on proper maintenance;

- **Commercial Use**
  Damage that occurs from commercial use;

- **Normal Wear and Tear**
  Damage or degradation expected to occur due to normal use over time;

- **Altered Products**
  Damage that occurs from alterations or modifications by any entity other than Chefman® such as the removal of the rating label affixed to the product;

- **Catastrophic Events**
  Damage that occurs from fire, floods, or natural disasters; or

- **Loss of Interest**
  Claims of loss of interest or enjoyment.

For product information, please visit us at Chefman.com.

EXCEPT WHERE SUCH LIABILITY IS REQUIRED BY LAW, THIS WARRANTY DOES NOT COVER, AND CHEFMAN® SHALL NOT BE LIABLE FOR, INCIDENTAL, INDIRECT, SPECIAL, OR CONSEQUENTIAL DAMAGES, INCLUDING WITHOUT LIMITATION, DAMAGE TO, OR LOSS OF USE OF THE PRODUCT, OR LOST SALES OR PROFITS OR DELAY OR FAILURE TO PERFORM THIS WARRANTY OBLIGATION. THE REMEDIES PROVIDED HEREIN ARE THE EXCLUSIVE REMEDIES UNDER THIS WARRANTY, WHETHER BASED ON CONTRACT, TORT OR OTHERWISE.

Warranty Registration

What do I need to register my product?

- Contact Information
- Model Number (see example below)
- Proof of Purchase (online confirmation, receipt, gift receipt)
- Date Code (see example below)
- Access Code (see example below)

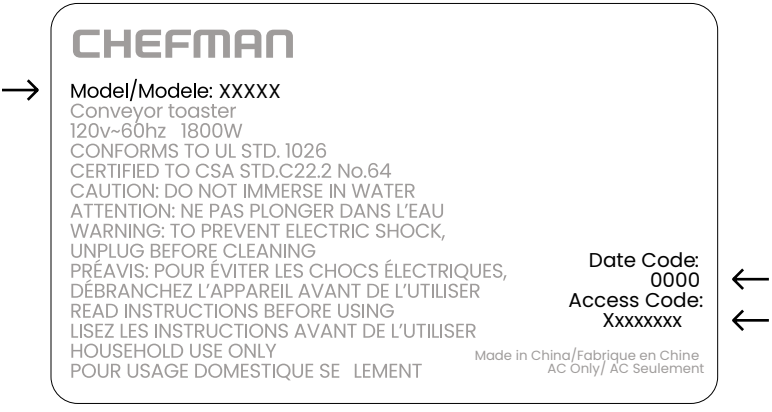

NOTE: Label depicted here is an example.
Please see label on your product for actual model/date code/access code.

How do I register my product?

All you need to do is fill out a simple Chefman® registration form.
You can easily access the form in one of the two ways listed below:

- Visit Chefman.com/register.
- Scan the QR code to the right to access site.

CHEFMAN.

Crema Supreme™
Espresso Machine

RJ54GSSUG05I324

Chefman® is a registered trademark of RJ Brands, LLC.
Crema Supreme™ is a trademark of RJ Brands, LLC.