Table of Contents

Congratulations on purchasing your new Hunter® ceiling fan! It will provide comfort and performance in your home or office for many years. This installation and operation manual contains complete instructions for installing and operating your fan.

We are proud of our work and appreciate the opportunity to supply you with the best ceiling fan available anywhere in the world.

To register your fan, please visit:
www.HunterFan.com/register

Save your receipt for proof of purchase.

What to Expect with Your Installation

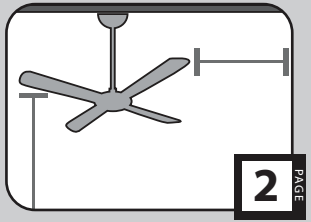

2 PAGE

Tools Needed

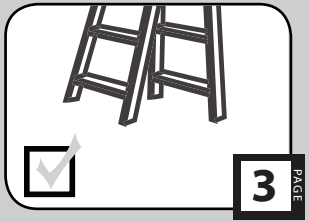

3 PAGE

Mounting Options

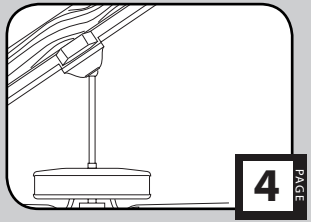

4 PAGE

Ceiling Bracket

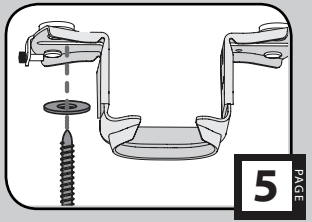

5 PAGE

Downrod

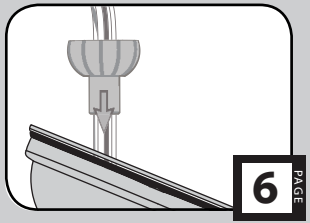

6 PAGE

Wiring

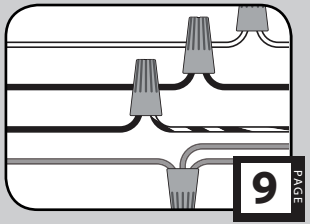

9 PAGE

Canopy

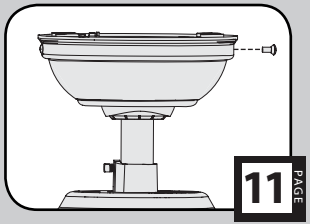

11 PAGE

Blade

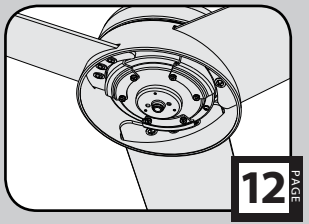

12 PAGE

Light Kit

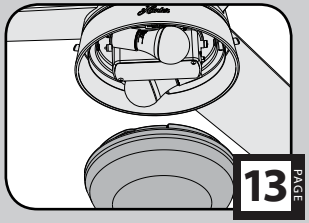

13 PAGE

Maintenance, Operation & Cleaning

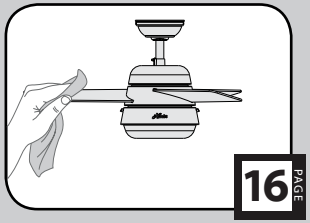

16 PAGE

Troubleshooting

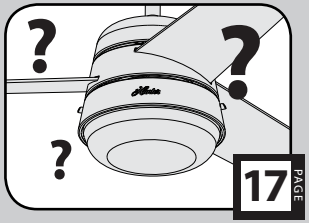

17 PAGE

M3642-01 • 01/06/17 • © 2017 Hunter Fan Company

What to Expect with Your Installation

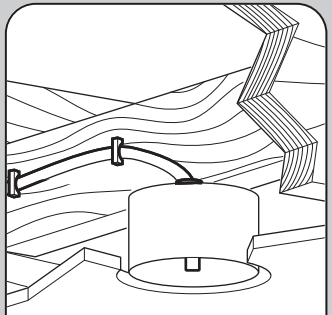

Must be able to secure the fan to building structure or fan-rated outlet box

If you are unfamiliar with wiring, use a qualified electrician.

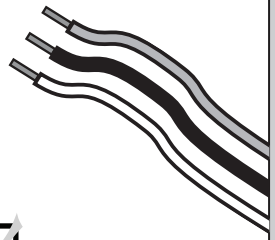

Know your wiring

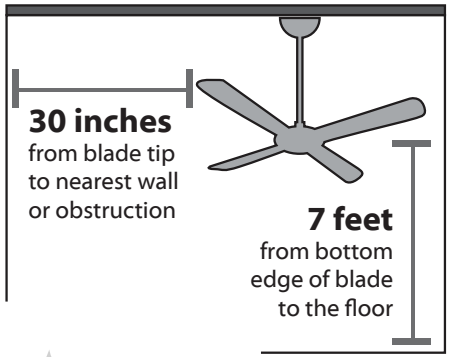

Assess location

You may need a friend to help you.

Check box to see fan weight

Ceiling angles greater than 34° will require an Angled Mounting Kit. See page 4 for details.

Assess ceiling angle

1 Standard Downrod
for ceilings 8-10 feet high

2 Shorter Downrod
for fans installed close to ceiling

3 Longer Downrod
for ceilings 10 feet or higher

Select a downrod length

Read and Save These Instructions

This product conforms to UL Standard 507.

⚠ WARNINGS

w.1 - To reduce the risk of fire, electrical shock, or personal injury, mount fan directly from building structure and/or an outlet box marked acceptable for fan support of 70 lbs (31.8 kg) and use the mounting screws provided with the outlet box.

w.2 - To avoid possible electrical shock, before installing or servicing your fan, disconnect the power by turning off the circuit breakers to the outlet box and associated wall switch location. If you cannot lock the circuit breakers in the off position, securely fasten a prominent warning device, such as a tag, to the service panel.

w.3 - To reduce the risk of fire, electrical shock, or motor damage, use only Hunter Solid State Speed Controls.

w.4 - To reduce the risk of personal injury, do not bend the blade brackets when installing the blade brackets, balancing the blades, or cleaning the fan. Do not insert foreign objects in between rotating fan blades.

⚠ CAUTIONS

c.1 - All wiring must be in accordance with national and local electrical codes ANSI/NFPA 70. If you are unfamiliar with wiring, use a qualified electrician.

c.2 - Use only Hunter replacement parts.

This equipment has been tested and found to comply with the limits for a Class B digital device, pursuant to part 15 of the FCC Rules. These limits are designed to provide reasonable protection against harmful interference in a residential installation. This equipment generates, uses and can radiate radio frequency energy and if not installed and used in accordance with the instructions may cause harmful interference to radio communications.

However, there is no guarantee that interference will not occur in a particular installation. If this equipment does cause harmful interference to radio or television reception, which can be determined by turning the equipment off and on, the user is encouraged to try to correct the interference by one or more of the following measures:

- *Reorient or relocate the receiving antenna.*
- *Increase the separation between the equipment and receiver.*
- *Connect the equipment into an outlet on a circuit different from that to which the receiver is connected.*
- *Consult the dealer or an experienced radio/TV technician for help.*

Caution: modifications not approved by the party responsible for compliance could void user's authority to operate the equipment.

This device complies with Part 15 of the FCC Rules. Operation is subject to the following two conditions: (1) This device may not cause harmful interference, and (2) this device must accept any interference received, including interference that may cause undesired operation.

M3642-01 • 01/06/17 • © 2017 Hunter Fan Company

Tools Needed

☑ Ladder

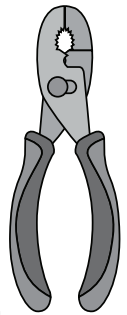

☑ Pliers

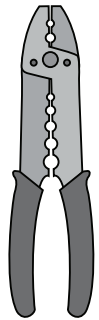

☑ Wire Strippers

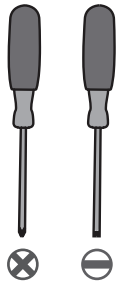

☑ Screwdrivers

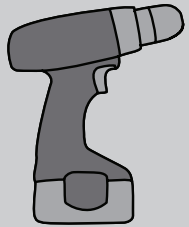

☐ Power Drill (optional)

☐ 9/64" Drill Bit (optional)

If mounting to a support structure, you will also need these tools.

Do not discard the hardware bags or mix parts from different bags. Make note of the symbol printed on each hardware bag. The symbols can be used to identify the appropriate hardware for each step.

M3642-01 • 01/06/17 • © 2017 Hunter Fan Company

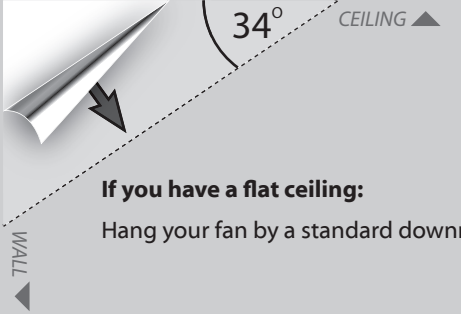

If you have a flat ceiling:

Hang your fan by a standard downrod *(included)*.

OPTION 1

If you have an angled ceiling:

1. You will need a longer downrod *(sold separately)*.
2. If your ceiling angle is greater than 34°, you will also need an Angled Mounting Kit *(sold separately)*.

OPTION 2

Use the three steps below to determine if your ceiling angle is greater than 34°

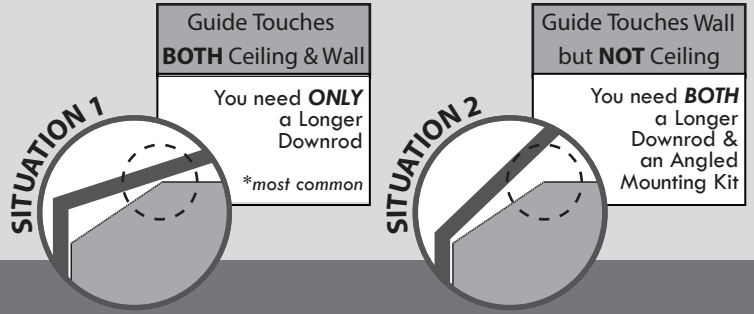

Mounting Options

www.HunterFan.com 1.888.830.1326

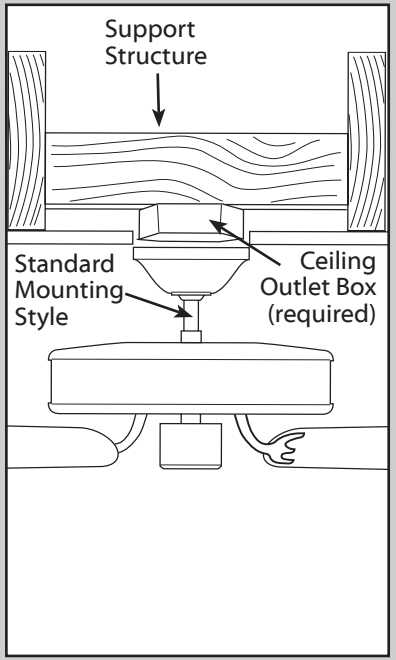

Use **Standard Mounting** or **Low-Profile Mounting** to hang the fan from a flat ceiling.

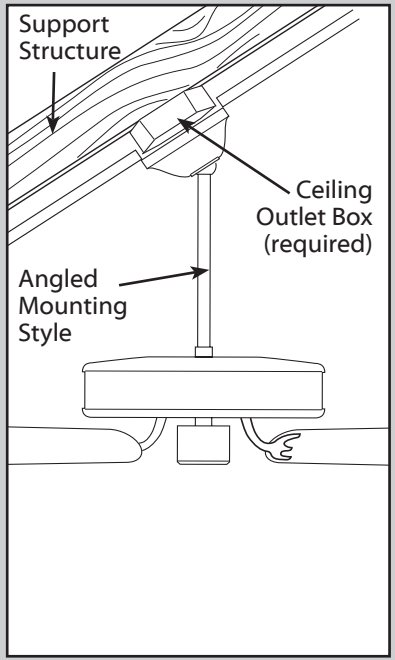

Use **Angled Mounting** to hang the fan from a vaulted or angled ceiling.

M3642-01 • 01/06/17 • © 2017 Hunter Fan Company

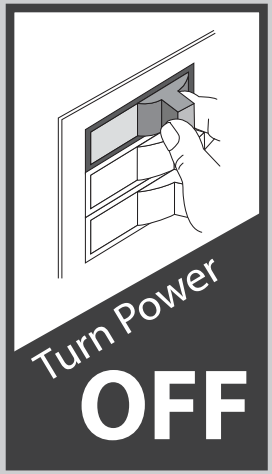

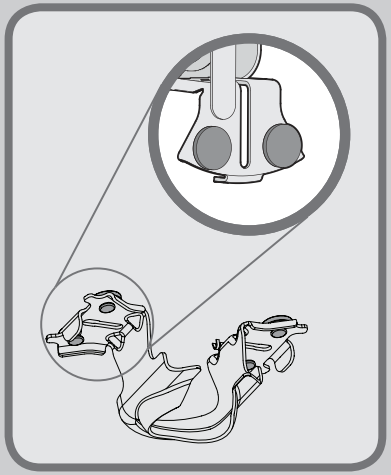

Make sure all four bumpers are still attached.

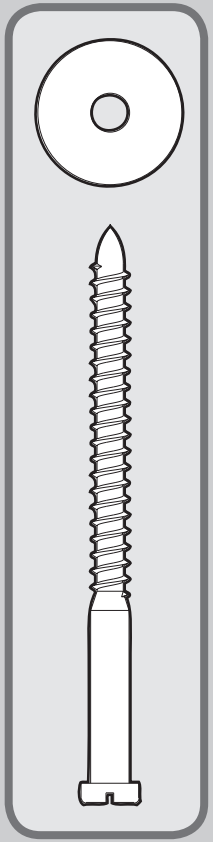

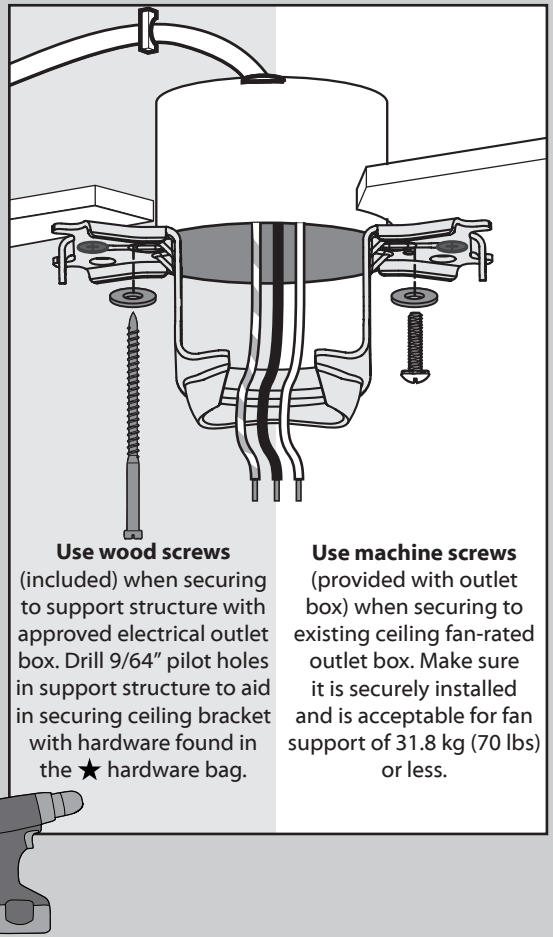

Use wood screws (included) when securing to support structure with approved electrical outlet box. Drill 9/64" pilot holes in support structure to aid in securing ceiling bracket with hardware found in the ★ hardware bag.

Use machine screws (provided with outlet box) when securing to existing ceiling fan-rated outlet box. Make sure it is securely installed and is acceptable for fan support of 31.8 kg (70 lbs) or less.

For angled ceilings, point opening toward peak.

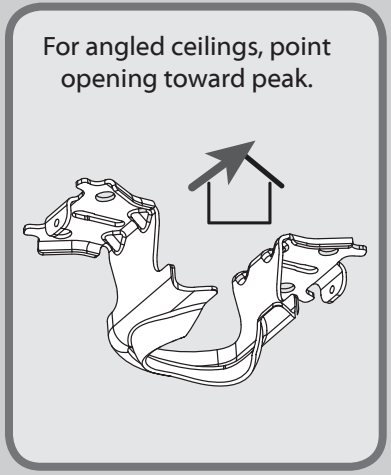

If you are unable to do this, call Technical Support at 1-888-830-1326.

To avoid possible electrical shock, before installing your fan, disconnect the power by turning off the circuit breakers to the outlet box associated with the wall switch location.

Refer to warning w.1 on pg. 2

M3642-01 • 01/06/17 • © 2017 Hunter Fan Company

Option 1

Standard Downrod
for ceilings 8-10' high

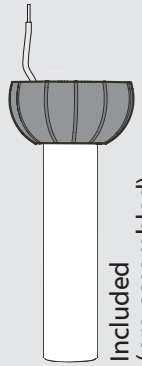

Included (pre-assembled)

skip to next page

Option 2

Shorter Downrod
for fans installed close to ceiling

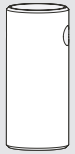

Included

Option 3

Longer Downrod
for angled ceilings or ceilings 10' or higher

Sold Separately

If you need a different downrod length follow these steps:

Steps 1-5 to remove standard downrod pipe

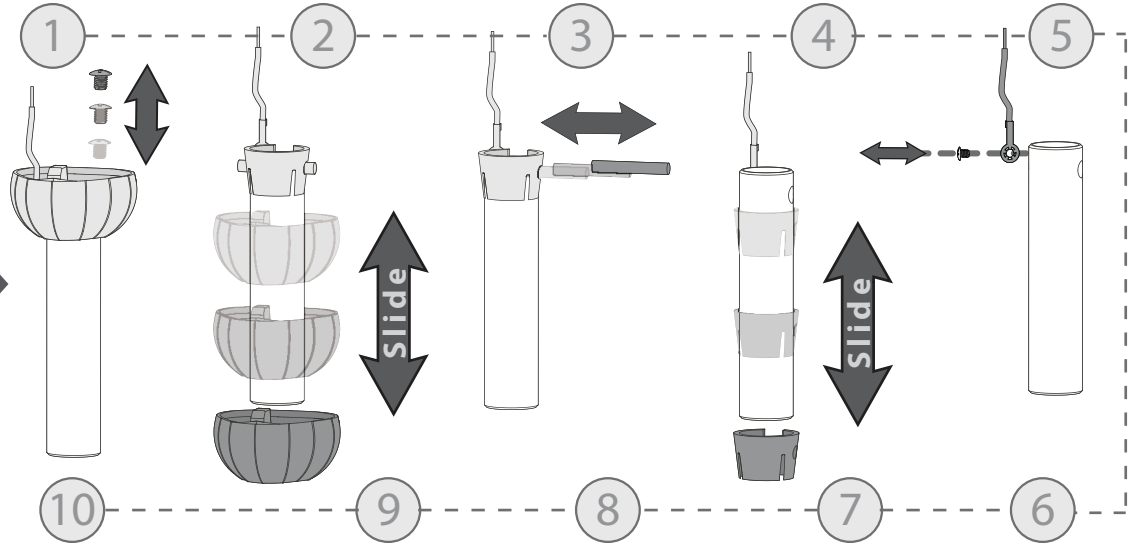

Steps 6-10 to reassemble with **new** pipe

M3642-01 • 01/06/17 • © 2017 Hunter Fan Company

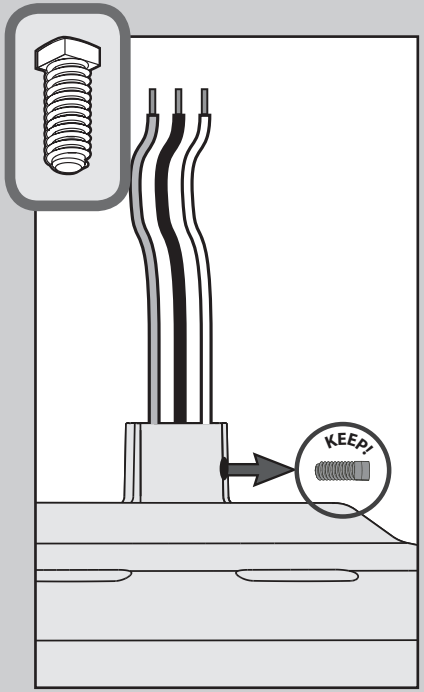

Remove the pre-installed setscrew so that the downrod can be inserted.

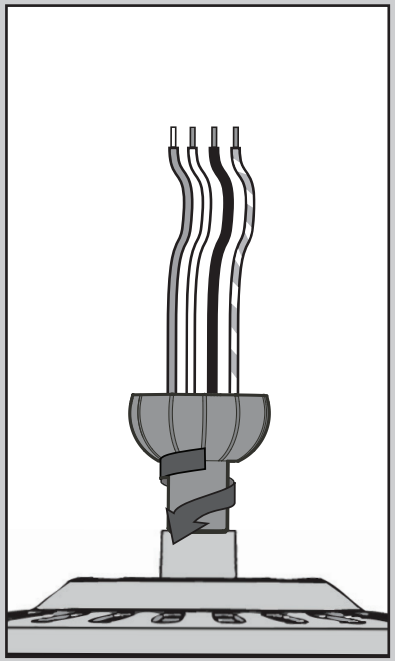

Hand tighten the downrod (at least 4-5 full turns) until it stops.

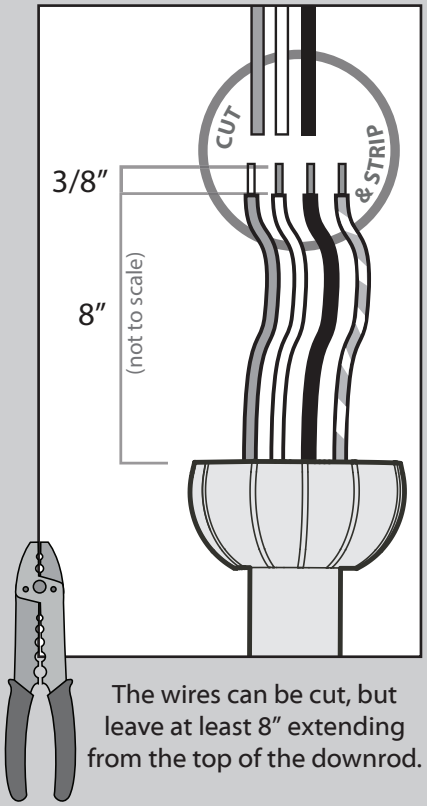

The wires can be cut, but leave at least 8″ extending from the top of the downrod.

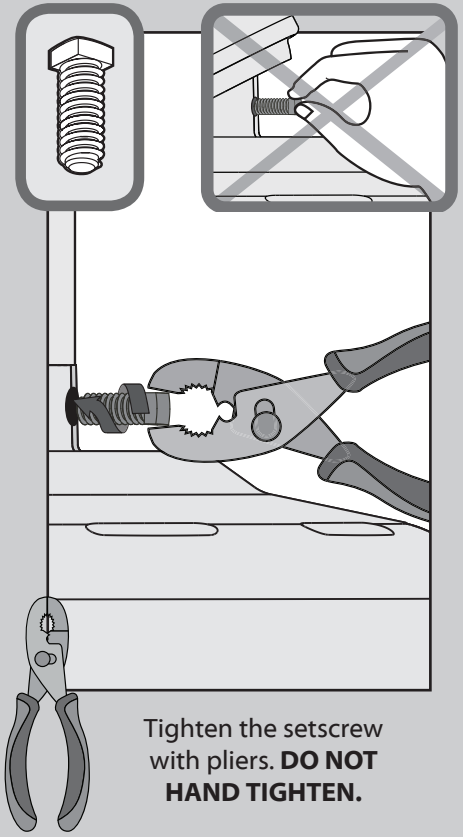

Tighten the setscrew with pliers. **DO NOT HAND TIGHTEN.**

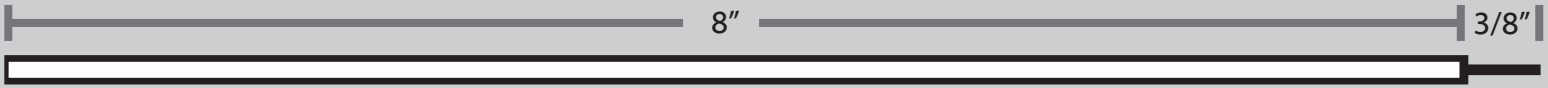

If the setscrew is not tightened securely, the fan may fall.

M3642-01 • 01/06/17 • © 2017 Hunter Fan Company

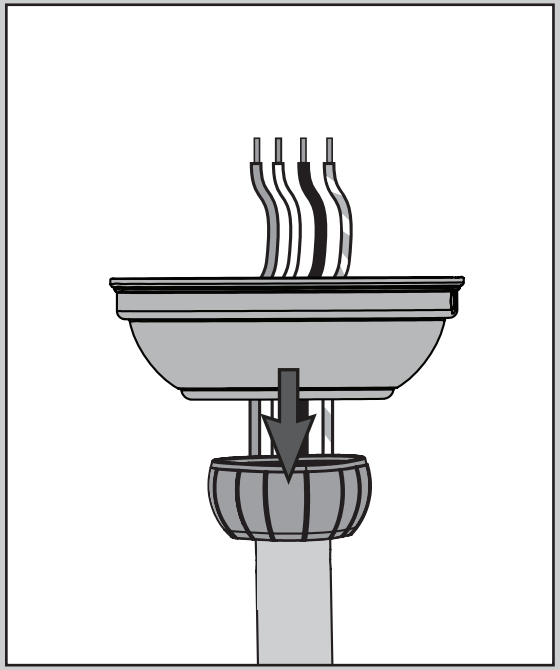

Put the wires and downrod through the canopy. Let the canopy sit loosely on top of the fan.

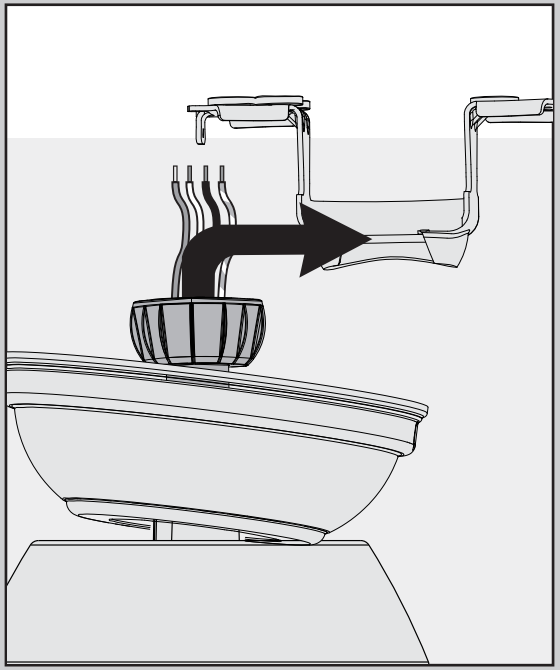

DO NOT PICK THE FAN UP BY THE CANOPY OR WIRES. Place the downrod ball into the slot in the ceiling bracket.

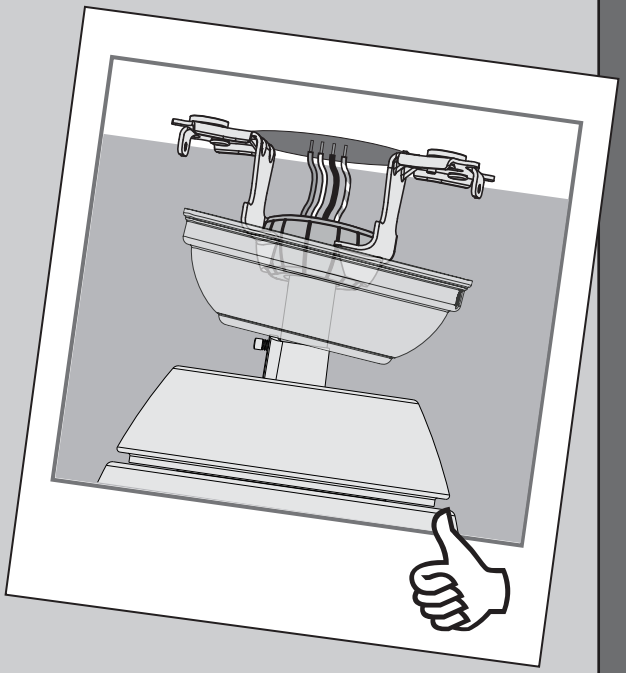

Note: Fan style may vary.

M3642-01 • 01/06/17 • © 2017 Hunter Fan Company

Have a single switch?
Follow these steps:

Dual Switch Instructions

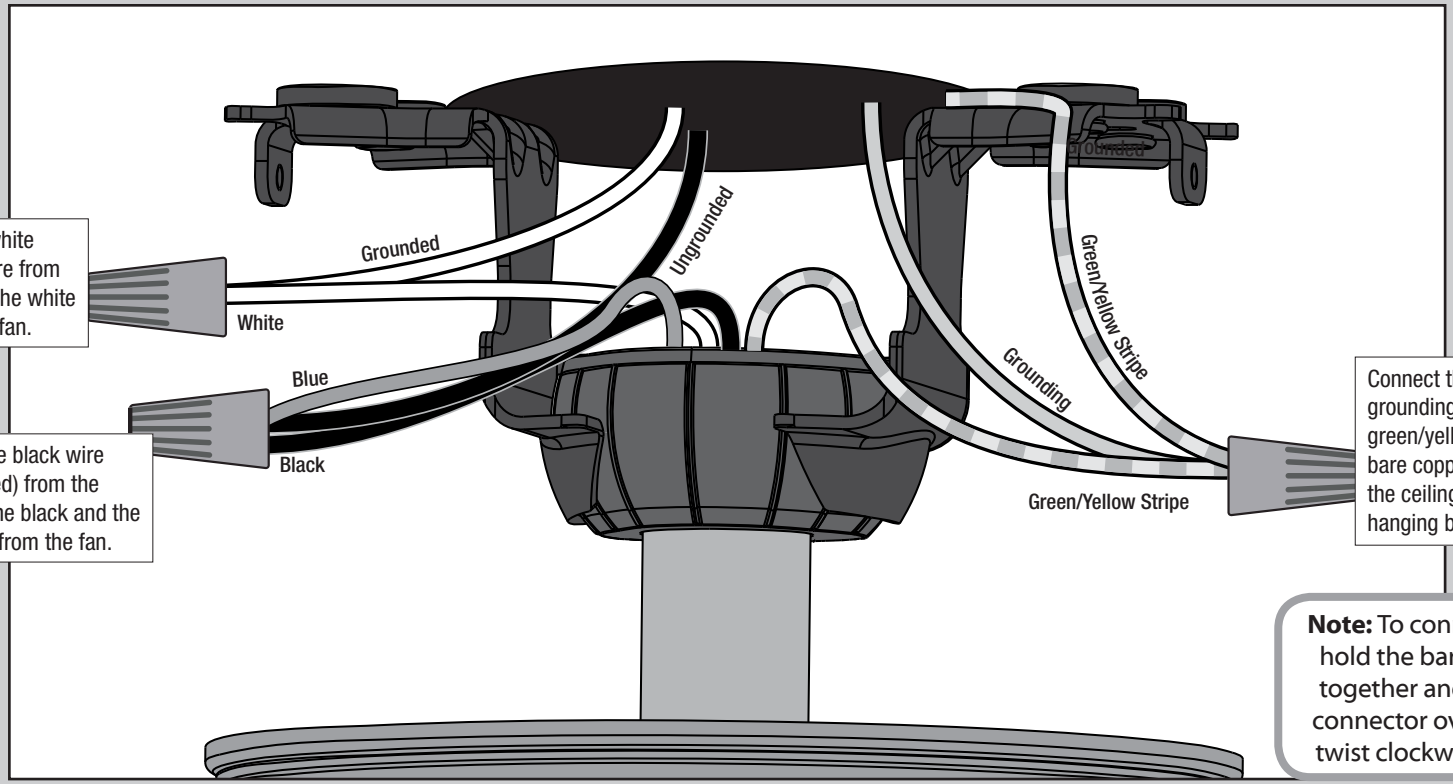

Connect the white (grounded) wire from the ceiling to the white wire from the fan.

Connect the black wire (ungrounded) from the ceiling to the black and the blue wires from the fan.

Connect the three grounding wires (green, green/yellow stripe, or bare copper) coming from the ceiling, downrod, and hanging bracket.

Note: To connect the wires, hold the bare metal leads together and place a wire connector over them, then twist clockwise until tight.

Turn the splices upward and push them carefully back through the hanger bracket into the outlet box. Spread the wires apart, with the grounded wires on one side of the outlet box and the ungrounded wires on the other side of the outlet box.

Refer to CAUTION c.1 on pg. 2

M3642-01 • 01/06/17 • © 2017 Hunter Fan Company

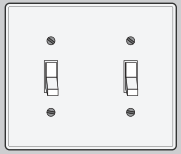

Have dual switches?

Follow these steps:

Connect the white (grounded) wire from the ceiling to the white wire from the fan.

Connect the black wire (ungrounded) from the ceiling to the black wire from the fan.

Connect the second ungrounded (light) wire from the celing to the blue wire from the fan.

Connect the three grounding wires (green, green/yellow stripe, or bare copper) coming from the ceiling, downrod, and hanging bracket.

Grounded

White

Ungrounded

Black

Ungrounded (light)

Blue

Grounding

Green/Yellow Stripe

Green/Yellow Stripe

Note: To connect the wires, hold the bare metal leads together and place a wire connector over them, then twist clockwise until tight.

Turn the splices upward and push them carefully back through the hanger bracket into the outlet box. Spread the wires apart, with the grounded wires on one side of the outlet box and the ungrounded wires on the other side of the outlet box.

Refer to CAUTION c.1 on pg. 2

M3642-01 • 01/06/17 • © 2017 Hunter Fan Company

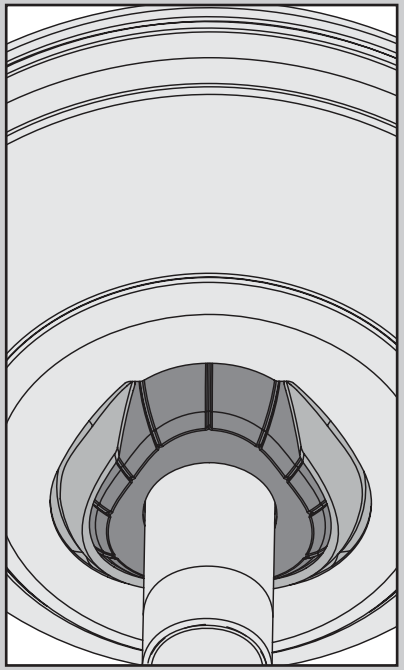

Position the canopy so that, when lifted into place, the canopy fits into the hanging bracket as shown.

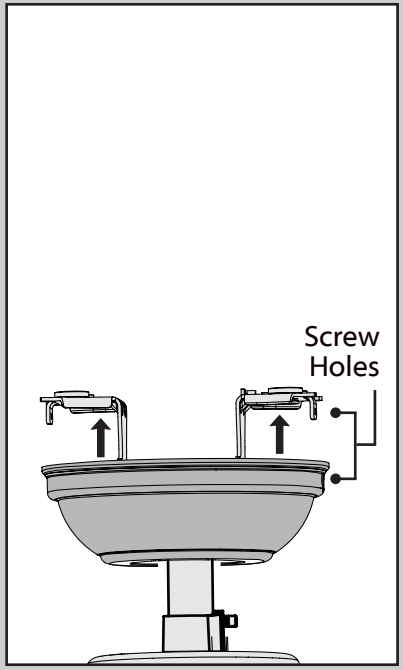

Lift the canopy into place so that the screw holes are aligned.

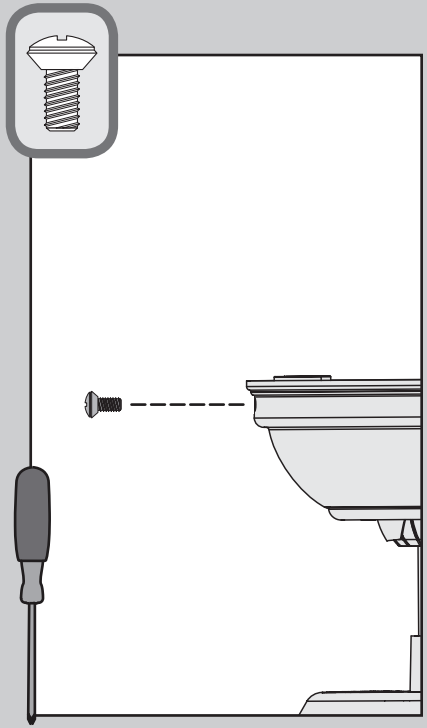

⊗ Insert the two canopy screws found in the ● hardware bag.

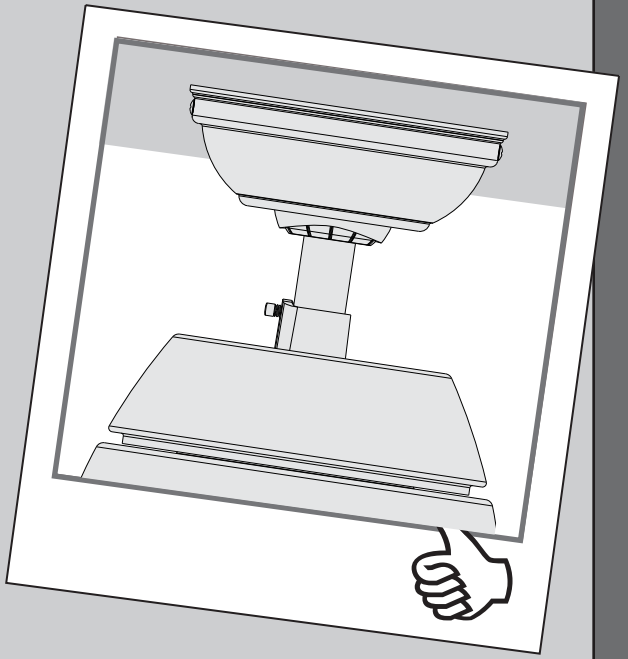

Note: Fan style may vary.

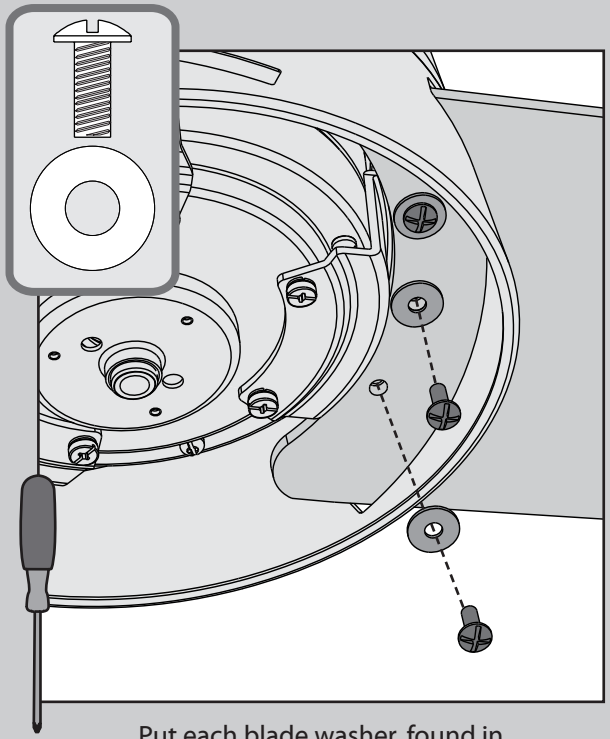

Put each blade washer, found in the ■ hardware bag, onto a blade screw, found in the ▲ hardware bag. Then secure each blade to a blade iron using the blade screws and washers.

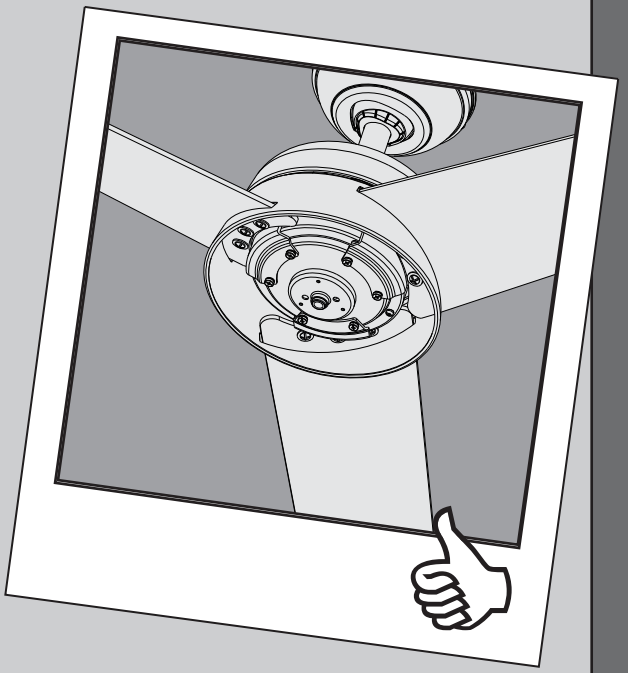

M3642-01 • 01/06/17 • © 2017 Hunter Fan Company

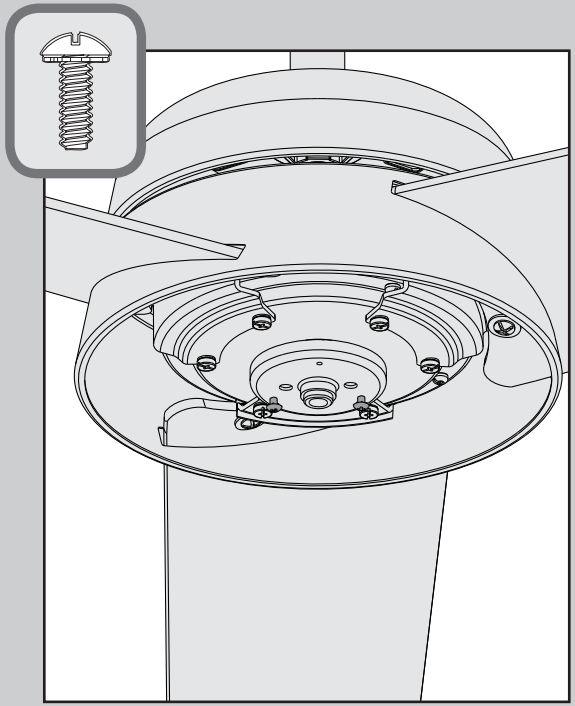

Partially install two light kit assembly screws, found in the ≡ hardware bag, halfway into the motor housing as shown. It does not matter which two screw holes you choose.

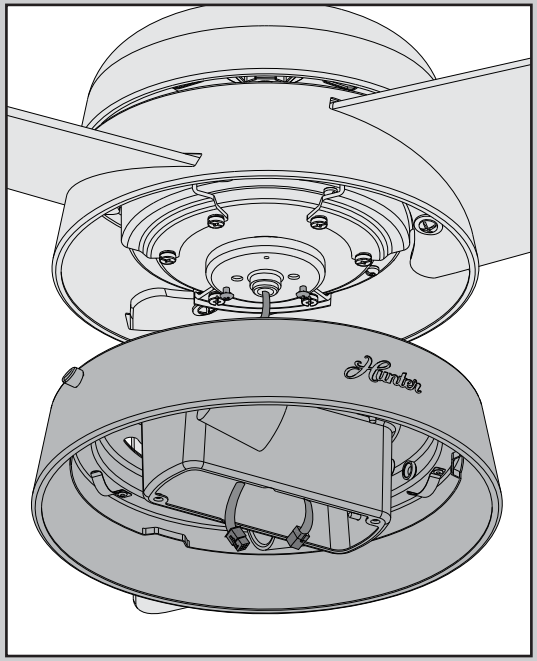

Feed the 9-pin plug connector coming from the bottom of the motor housing through the center hole in the light kit assembly. Connect it to the plug connector found in the switch housing area of the light kit assembly. Make sure to line up the colored markings on the connectors.

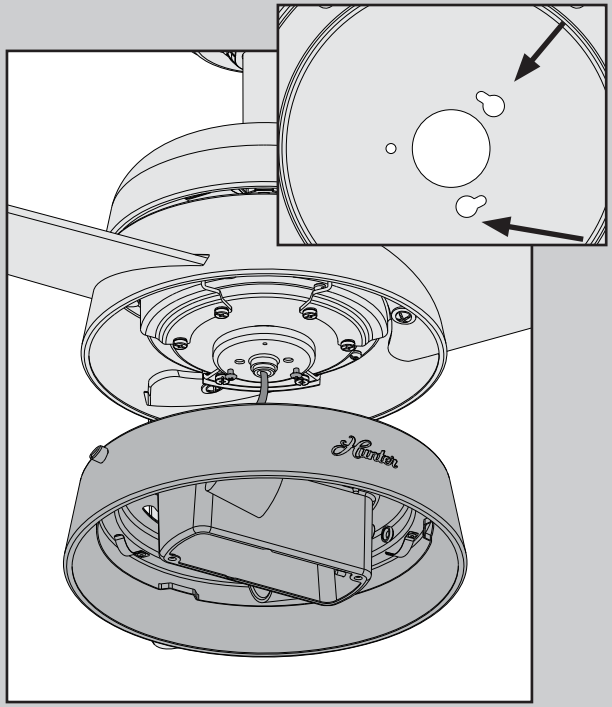

Align the keyhole slots in the top of the light kit assembly with the partially installed assembly screws. Wrap the keyhole slots around the screws and twist counterclockwise.

M3642-01 • 01/06/17 • © 2017 Hunter Fan Company

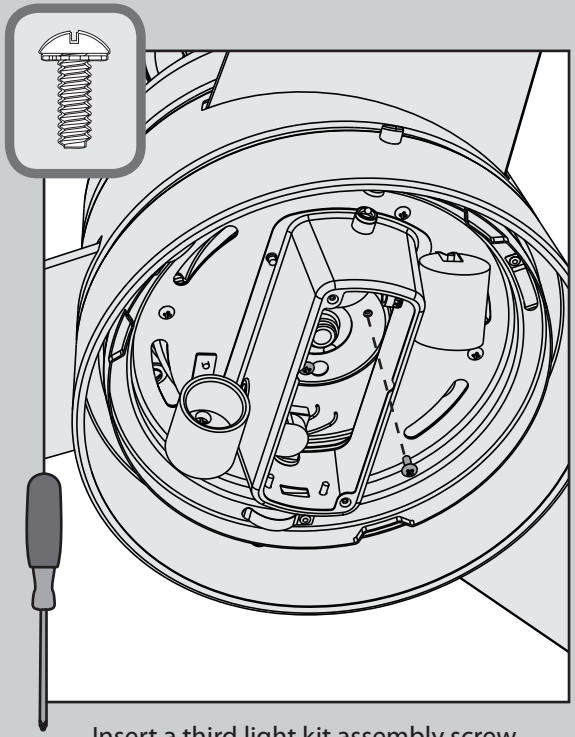

Insert a third light kit assembly screw, found in the ≡ hardware bag, into place and tighten all three screws securely.

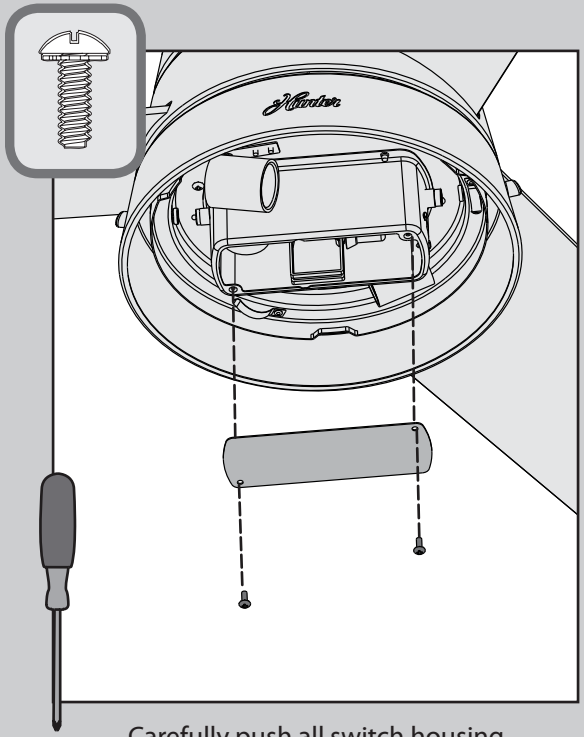

Carefully push all switch housing components into the switch housing, then install the switch housing plate using two light kit assembly screws, found in the ≡ hardware bag.

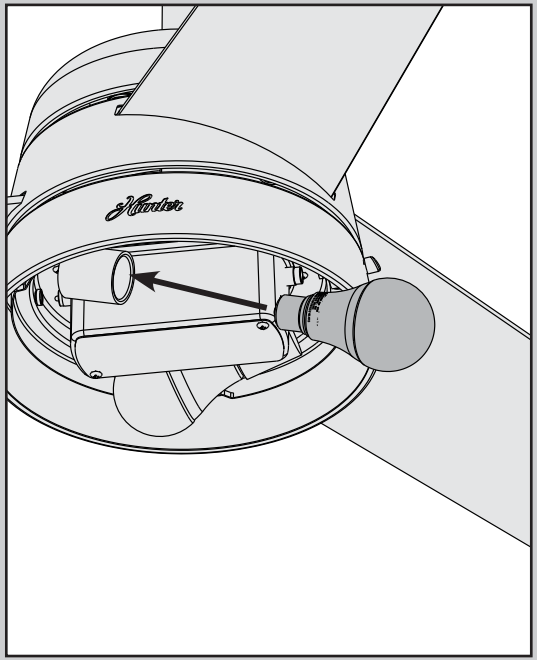

Install a bulb into each of the sockets. When necessary, replace with bulbs of the same wattage.

Make sure the light kit assembly is securely attached to the motor housing. Failure to properly secure all three assembly screws could result in the light fixture falling.

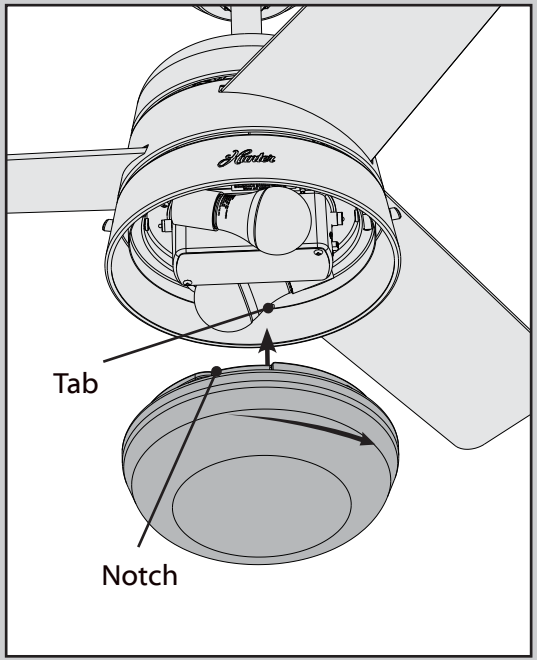

Align the notches in the outer rim of the globe with the tabs on the light kit assembly Carefully lift the globe up inside the light fixture as far as it will go. Rotate the globe in a clockwise direction until it is held tightly in place by the three tabs.

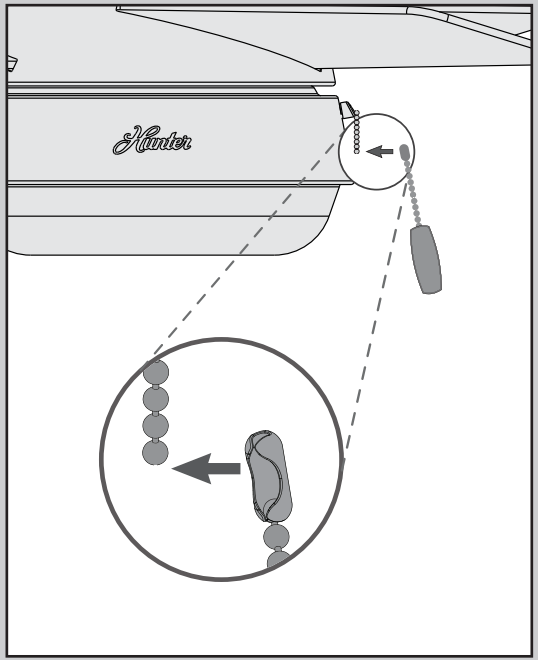

Remove and discard the plastic connectors from the ends of the short pull chain. Connect the appropriate pull chain pendant to each of the short chains. The fan pull chain controls the speed: from high to off. The light pull chain controls the light fixture: on and off.

See next page for fan operation instructions.

M3642-01 • 01/06/17 • © 2017 Hunter Fan Company

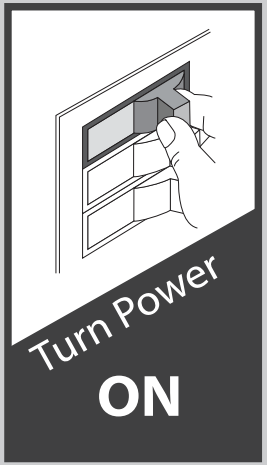

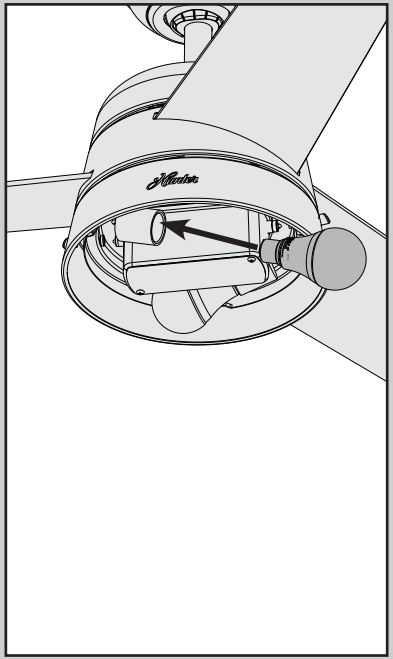

Changing the bulbs - carefully remove the globe. Unscrew the bulbs and replace them with bulbs of the same wattage. Reinstall the globe.

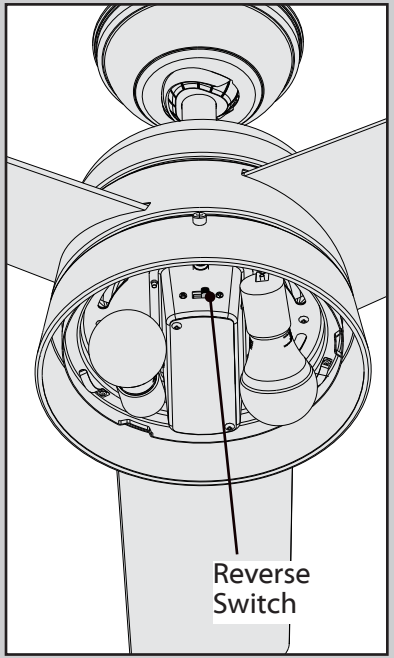

Changing the direction of air flow - carefully remove the globe and move the reverse switch to the opposite position. Reinstall the globe.

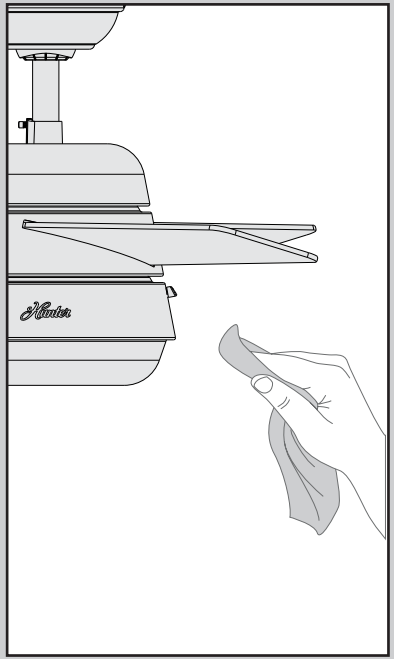

Cleaning the fan - use soft brushes or cloths to prevent scratching. Cleaning products may damage the finishes.

M3642-01 • 01/06/17 • © 2017 Hunter Fan Company

Fan doesn't work

- Make sure power switch is on.
- Pull the pull chain to make sure it is on.
- Push the motor reversing switch firmly left or right to ensure that it is engaged.
- Check the circuit breaker to ensure the power is turned on.
- Make sure the blades spin freely.
- Turn off power from the circuit breaker, then loosen the canopy and check all the connections according to the wiring diagram on page 11.
- Check the plug connection in the switch housing.

Excessive wobbling

- Tighten all of the blade and blade iron screws until they are snug.
- Use the provided balancing kit and instructions to balance the fan.

Noisy Operation

- Tighten the blade and blade iron screws until they are snug.
- Check to see if any of the blades are cracked. If so, replace all of the blades.

M3642-01 • 01/06/17 • © 2017 Hunter Fan Company