Time slows where design feels right.

530173SQQSNDW

530173SQQSNBW

530173SQQWO

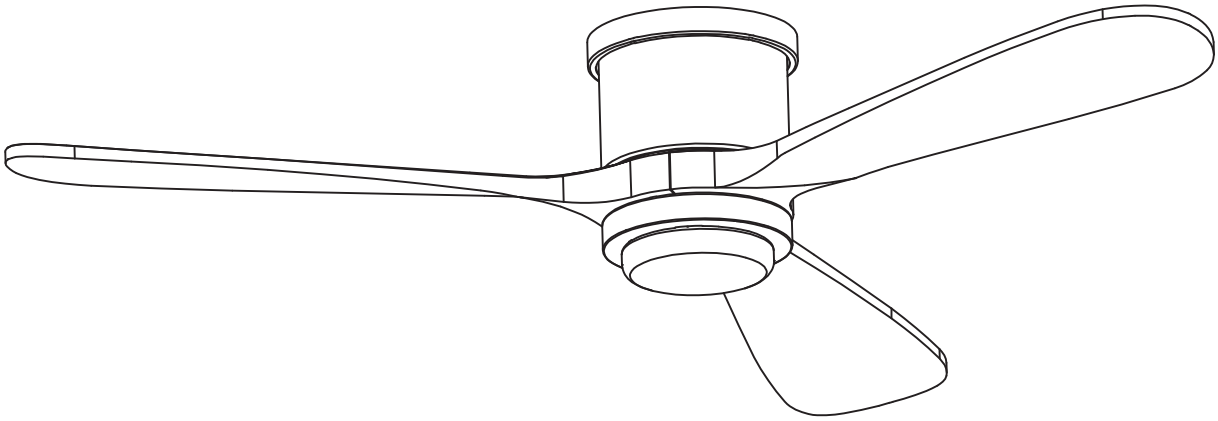

English

www.parrotuncle.com

Time slows where design feels right.

530173SQQSNDW
530173SQQSNBW
530173SQQWO

Installation & Operating Instructions for the
Perimost Owner's Installation ,Manual

WARNING: SHUT POWER OFF AT FUSE OR CIRCUIT BREAKER

Sicherheit information

1. To reduce the risk of an electrical blow, electricity on the protective switch or the safety box went out before starting.
2. All wiring must correspond to the NASI/NFPA 70-1999 National Electric Code and local electrical regulations. The electrical installation must be carried out by a qualified and approved electrician.
3. The connection box and support construction must be assembled safely and 35 pounds (15.9 kilos) must be able to transport reliably. Use only output boxes listed with labeling

   "Accepted for fans with a weight of £ 35 (15.9 kilos) or less."

4. The fan must be installed with a minimum distance of 2.1 m (7 feet) from the posterior edge of the blades to the floor. Make sure that there is a space of at least 30 cm between the fan's blades and any wall or other obstacle with which they could collide.It is important to note that the greater the distance,the more efficient the airflow would be.

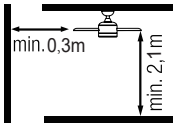

5. Do not operate the reverse switch if the fan blades are moving. You have to turn off the fan and stop the blades before reverse the direction of the blades.
6. Do not place objects on the road to blades.
7. To avoid lesions or damage to the fan and other objects, be careful if you work on the fan or clean it.
8. Electrical diagrams only serve as a reference. The lighting rates that are not delivered with the fan must be listed and marked with the valve model that will be installed for use. The switches must be general use switches UL. Take into account the instructions for the appropriate installation included in the lighting rates and the switches.
9. After the electrical connections have been made, the size staircase must be turned up and carefully push to the plug box. The cables must be distributed in such a way that the ground connected driver and the device head are next to the socket.
10. All fixing screws must be verified before installation and, if necessary, followed.

WARNING: To reduce the risk of injury, blade brackets cannot be folded during installation or after installation. Do not put any object on the path of blades.

WARNING: Remove rubber motor attacks at the bottom of the fan before mounting the blades or try the motor.

WARNING: To avoid the risk of a fire or an electrical blow, this fan should not be used with a semiconductor speed controller.

WARNING: To avoid a possible electric shock, turn off the current in the main security box before wiring. If you feel that you do not have enough knowledge or experience in electrical wiring, communicate with a license electrician.

WARNING: Electrical diagrams only serve as a reference. The optional use of an lighting rate must be on the list and marked with this fan for use.

WARNING: To reduce the risk of fires, electrical discharges or injuries, assemble the device in a socket that with the inscription accepted for fans with a weight of £ 35) or less. It is marked and use the screws supplied with the plug.

TECHNICAL INFORMATION

SKU	Nominal voltage	Nominal output (motor)	light
530173SQQSNDW	110-120V AC	52W	18W LED 3000/4000/6000K
530173SQQSNBW	110-120V AC	52W	18W LED 3000/4000/6000K
530173SQQWO	110-120V AC	52W	18W LED 3000/4000/6000K

Time slows where design feels right.

530173SQQSNDW
530173SQQSNBW
530173SQQWO

Installation & Operating Instructions for the
Perimost Owner's Installation ,Manual

WARNING: SHUT POWER OFF AT FUSE OR CIRCUIT BREAKER


Blade screw(7PCS)


Plastic wire nut(6PCS)


Mounting screw(2PCS)


Washer(2PCS)

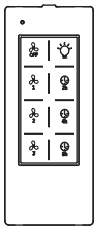
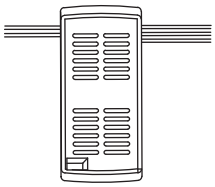
Remote control (1 PC)

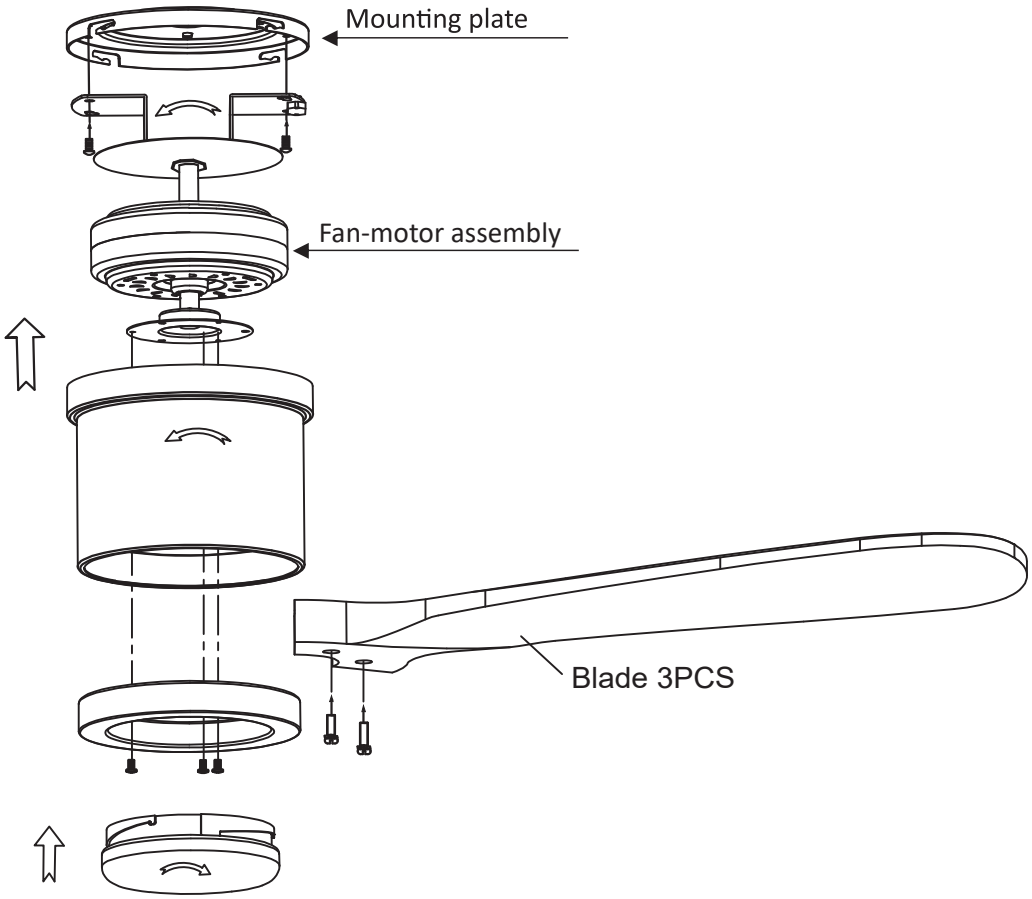

Pls check whether above accessories are completed or not?Yes,and install.

Time slows where design feels right.

530173SQQSNDW
530173SQQSNBW
530173SQQWO

Installation & Operating Instructions for the
Perimost Owner's Installation ,Manual

WARNING: SHUT POWER OFF AT FUSE OR CIRCUIT BREAKER

1

Phillips screwdriver

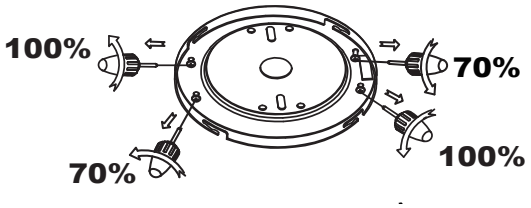

100%(completely) remove 2 screws from the mounting plate for later use.

70% remove 2 screws from the mounting plate.

2

Phillips screwdriver

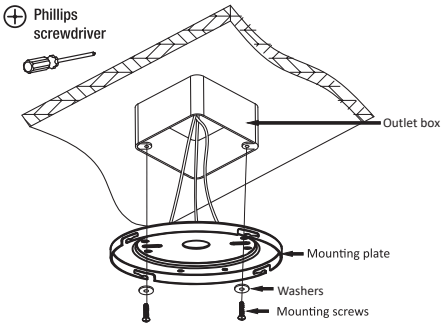

Warning:Failure to disconnect power supply prior to installation may result in serious injury.

For safety and best operating results,recommend you have a qualified electrician install this fan.

Secure mounting plate to outlet box by tightening mounting screws & washers.

The ceiling fan must be installed in a location with a minimum of 300mm spacing from the tip of the blade to the nearest objects or walls.Secure the mounting plate to the ceiling joist or structure that is capable of carrying a load of at least 15.9kgs,with two long screws provided.

Ensure at least 30mm of the screws is threaded into the support.

Note:For ease of wiring feed house wires through mounting plate.

3

Phillips screwdriver

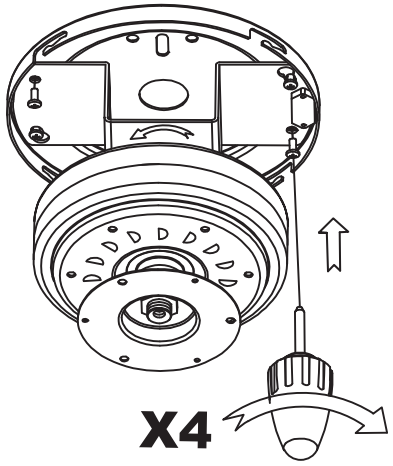

FROM POWER SOURCE AC 110- 120 VOLT 60Hz 3.5AMPS.

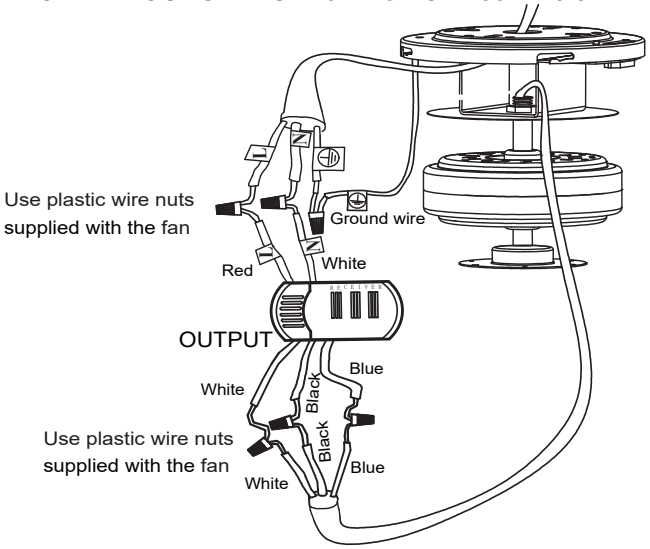

Install the motor to the mounting plate with 4 screws.

WARNING: To avoid possible electrical shock, be sure electricity is turned off at the main fuse box before wiring.
Make the wire connection between the Fan and power supply.Make sure all connections are secured.

4

Phillips screwdriver

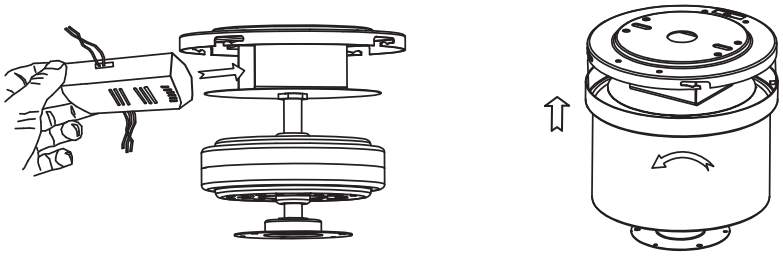

Insert the receiver into the mounting bracket with the flat side of the receiver facing the ceiling.

Aligh the groove on the motor cover with the bayonet on the mounting plate,and rotate it clockwise to make sure it clicks into plate.

Time slows where design feels right.

530173SQQSNDW
530173SQQSNBW
530173SQQWO

Installation & Operating Instructions for the
Perimost Owner's Installation ,Manual

WARNING: SHUT POWER OFF AT FUSE OR CIRCUIT BREAKER

5

Phillips screwdriver

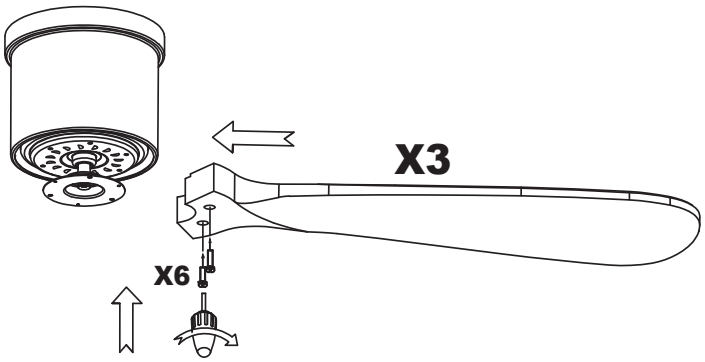

One blade at a time,insert the blade into the slot through the motor and aligh the blade with the 2 holes.

Tighten screws securely.

Repeat for the remaining 2 blades.

6

Phillips screwdriver

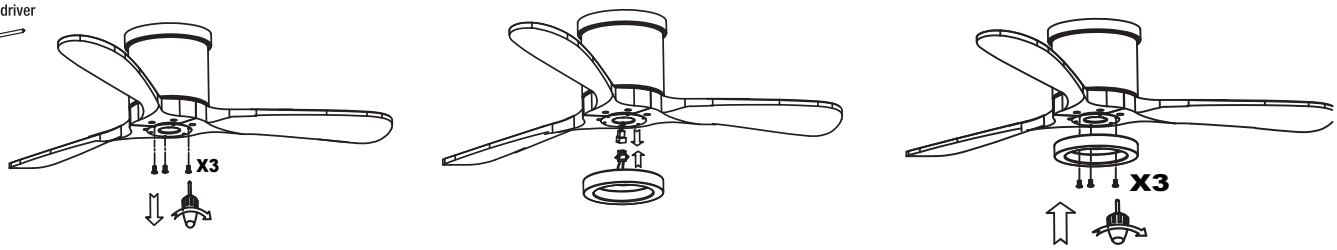

Remove 3 screws from the motor, and then connect the connectors.

Install the light pan to the motor with 3 screws. Tighten screws securely.

7

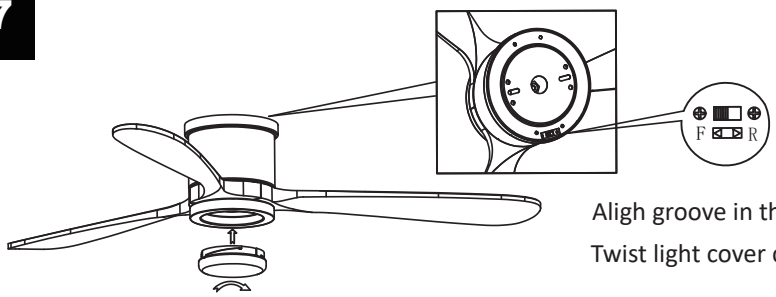

Aligh groove in the light cover with ridge in the light pan.

Twist light cover clockwise until it is secure.

The silde switch(XX) controls the direction of the blades: forward(switch left) or reverse(switch right).

The appropriate speed settings for warm or cool weather depends on factors such as the room size,ceiling height, and number of fans.

NOTE: Wait for the fan to stop before reversing the direction of the blade rotation.

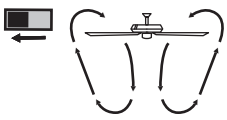

A.Warm Weather
(SUMMER TIME)

-(Forward) A downward airflow creates a cooling effect.
This allows you to set your air conditioner on a higher setting without affecting your comfort.

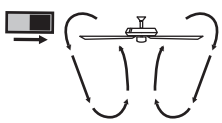

B.Cool Weather
(WINTER TIME)

-(Reverse) A upward airflow moves warm air off the ceiling.
This allows you to set heating unit on a lower setting without affecting your comfort.

Time slows where design feels right.

530173SQQSNDW
530173SQQSNBW
530173SQQWO

Installation & Operating Instructions for the
Perimost Owner's Installation ,Manual

WARNING: SHUT POWER OFF AT FUSE OR CIRCUIT BREAKER

Remote controller

INSTRUCTION OF INSTALLATION AND OPERATION

1. INSTALLING RECEIVER IN CEILING FAN

A.Safety precautions

1. WARNING: HIGH VOLTAGE! Disconnect power by removing fuse or switching off circuit breaker.
2. Do not use with solid state fans.
3. Electrical wire must meet all local and national electrical code requirements.
4. Supply for fan must be 110/120 volt, 60Hz, 3.5A
5. Maximum fan motor amps: 1.0.
6. Maximum light watts: 180 incandescent or ballast and LED.
7. To Reduce the risk of shock, this fan must be installed with a wall switch/control.

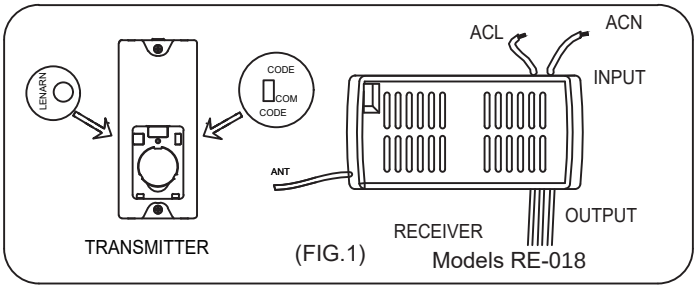

(FIG.1)

CAUTION: Ceiling Angle Shall Not Exceed 30 Degrees, For Mounting Controller. Models GA043

B. Installing receiver in fan

1. Remove power from the circuit.
2. Remove ceiling fan canopy from the mounting bracket.
3. Disconnect existing wiring between ceiling fan and Supply in electrical junction box.
4. Make connections as follows, using the wire nuts supplied.

CONNECT TO

Red/Black receiver wire(AC IN L).....Red/Black supply wire
White receiver wire(AC IN N).....White supply wire
White receiver wire(TO MOTOR N)...White fan wire
Black receiver wire(TO MOTOR L)...Black fan wire
Blue receiver wire(FOR LIGHT)...Blue light wire

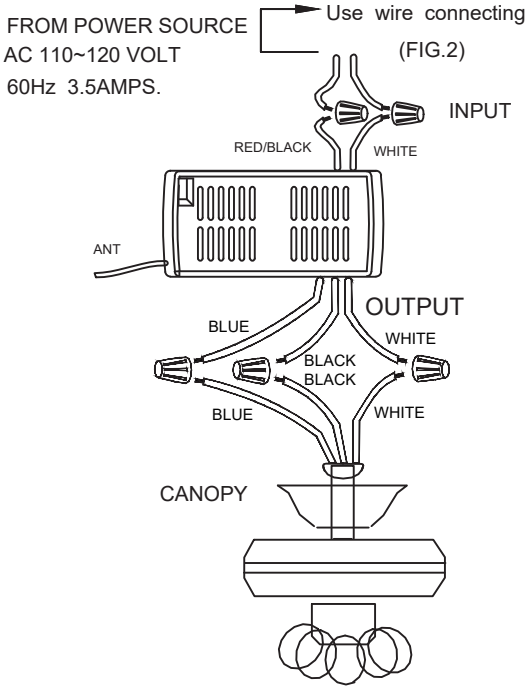

(FIG.2)

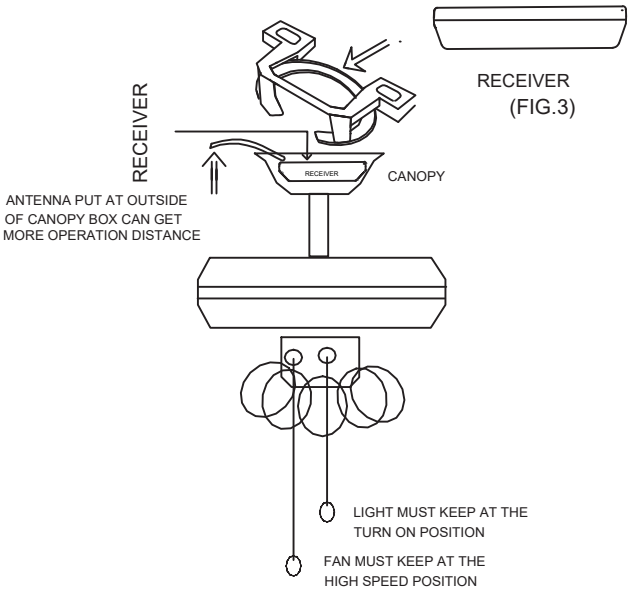

(FIG.3)

If other fans or supply wires are different color, have this unit installed by qualified licensed electrician.

a.Push all connected wires up into junction box.

b.Lay the brown antenna wire on top of the receiver,and put the receiver into the mounting bracket.

c.Reinstall the canopy on the mounting bracket.

d.Restore power.

e.Install 1.5 volt battery. (To prevent damage to transmitter, remove the battery if not used for a long time).

f. Store the transmitter away from excessive heat or humidity.

g.This remote control unit is equipped with roll code combinations. In order to prevent possible interference from or to other remote units such as garage door openers, car alarm or security system. If you find that your fan and light kit go on and off without using your remote control, simply change the code combination in your transmitter and receiver

Time slows where design feels right.

530173SQQSNDW
530173SQQSNBW
530173SQQWO

Installation & Operating Instructions for the
Perimost Owner's Installation ,Manual

WARNING: SHUT POWER OFF AT FUSE OR CIRCUIT BREAKER

2. OPERATING TRANSMITTER:

Operating the buttons on the panel of the transmitter.

3 key -for fan high speed.

2 key-for fan medium speed.

1 key-for fan low speed.

OFF key-for fan off.

LIGHT key-for light on and off.

2hr , 4hr , 8hr button to set the FAN sleep timer

Open battery compartment
to remove insulation spacer
before use transmitter

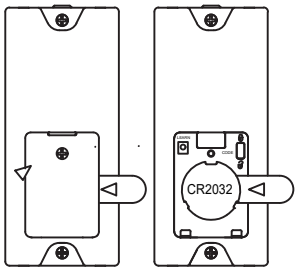

▽ PULL

REMOVE BEFORE USE

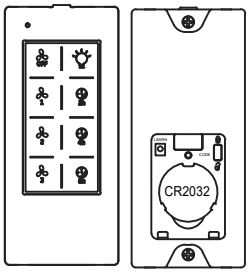

MODEL:GA043

OPERATION DISTANCE 20 FEET

YOUR REMOTE NOW HAS FULL CONTROL OF THE FAN AND LIGHT.

3.TROUBLE SHOOTING GUIDE

a.Power to receiver?

b.Receiver wired correctly?

c.Fan manual speed control in highest position?

d.Light kit switch turned on?

e.Good battery in the transmitter?

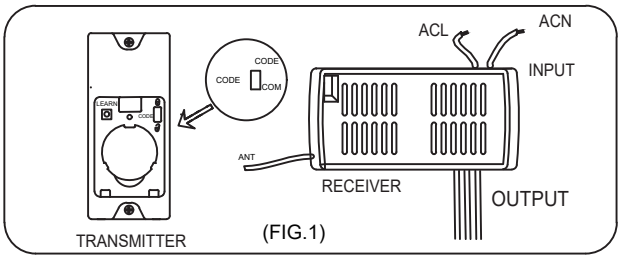

(FIG.1)

If there are two or more ceiling fans installed in the same house, in order to prevent your ceiling fans from being affected by the remote control of the adjacent ceiling fans, first turn the switch in each remote control transmitter to the CODE(UP) position (see the schematic diagram FIG1) Remarks: The standard state of the transmitter is in the down code COM.

(Power-off means you need to use a wall switch to shut down the power of the ceiling fan, if you do not have a wall switch, please power off the whole room from the air circuit-breaker for each room)

After installing the remote control receiver on the ceiling fan

1: Turn on the power of the 1# ceiling fan receiver (the power of the 2# receiver is kept in a power-off state), within 30 seconds after the fan power is turned on, press the LEARN button corresponding to the 1# transmitter, then The receiver will learn the transmitter code. When the transmitter code is learned successfully, the light of the ceiling fans will flash twice, and then it can be used normally.

2: Turn on the power of the 2# ceiling fan receiver (the power of the 1# receiver is kept in a power-off state), within 30 seconds after the fan power is turned on, press the LEARN button corresponding to the 2# transmitter, then The receiver will learn the transmitter code. When the transmitter code is learned successfully, the light of the ceiling fans will flash twice, and then it can be used normally.

And so on, only one ceiling fan is powered on each time the corresponding transmitter learns.

After the 1# and 2# remote control transmitters have been successfully learned, turn on the power of the two ceiling fans. At this time, the 1# transmitter and the 2# transmitter can be used separately for one ceiling fan.

FCC Statement:

This device complies with Part 15 of the FCC Rules. Operation is subject to the following two conditions.
This device may not cause harmful interference.
This device must accept any interference received, including interference that may cause undesired operation.
Changes or modifications not expressly approved by the party responsible for compliance could void the user's authority to operate the equipment.

NOTE: This equipment has been tested and found to comply with the limits for a Class B digital, pursuant to Part 15 or the FCC Rules. These limits are designed to provide reasonable protection against harmful interference in a residential installation. This equipment generates, uses and can radiate radio frequency energy and, if not installed and used in accordance with the instructions, may casue harmful interference to radio communications,

However, there is no guarantee that interference will not occur in a particular installation. If the equipment does cause harmful interference to radio or television reception, which can be determined by turning the equipment off and on, the user is encouraged to try to correct the interference by one or more of the following measures:

--- Reorient or relocate the receiving antenna.

--- Increase the separation between the equipment and receiver.

--- Connect the equipment into an outlet on a circuit different from that to which the receiver is connected.

--- Consult the dealer or an experienced radio/ TV technician for help.

WARNING:

Do NOT install this fan with variable speed wall control or wall-mounted dimmer switch. It will permanently damage the fan's remote control and cause the fan's function to fail.



NO Variable speed wall control



NO Dimmer switch

WARNING: SHUT POWER OFF AT FUSE OR CIRCUIT BREAKER

size of product

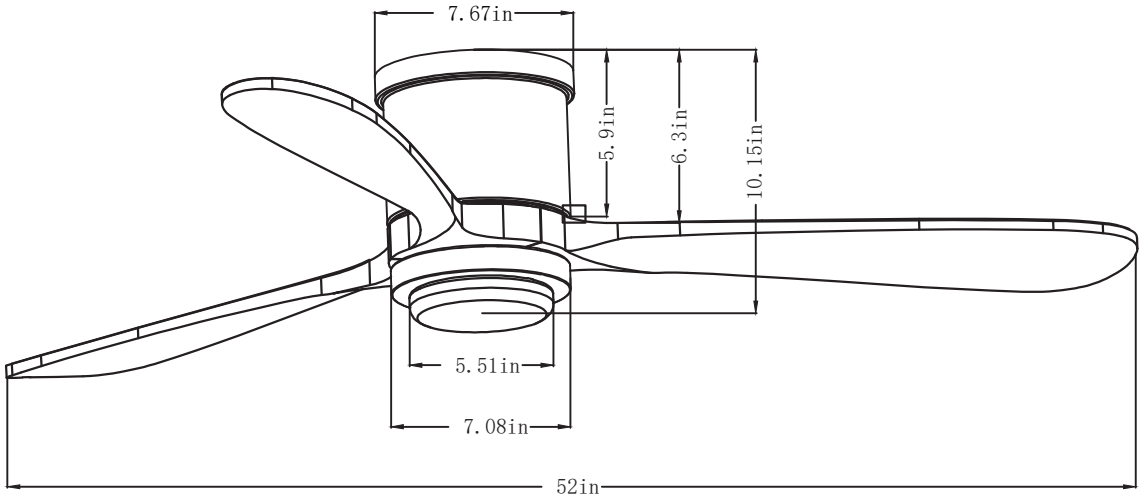

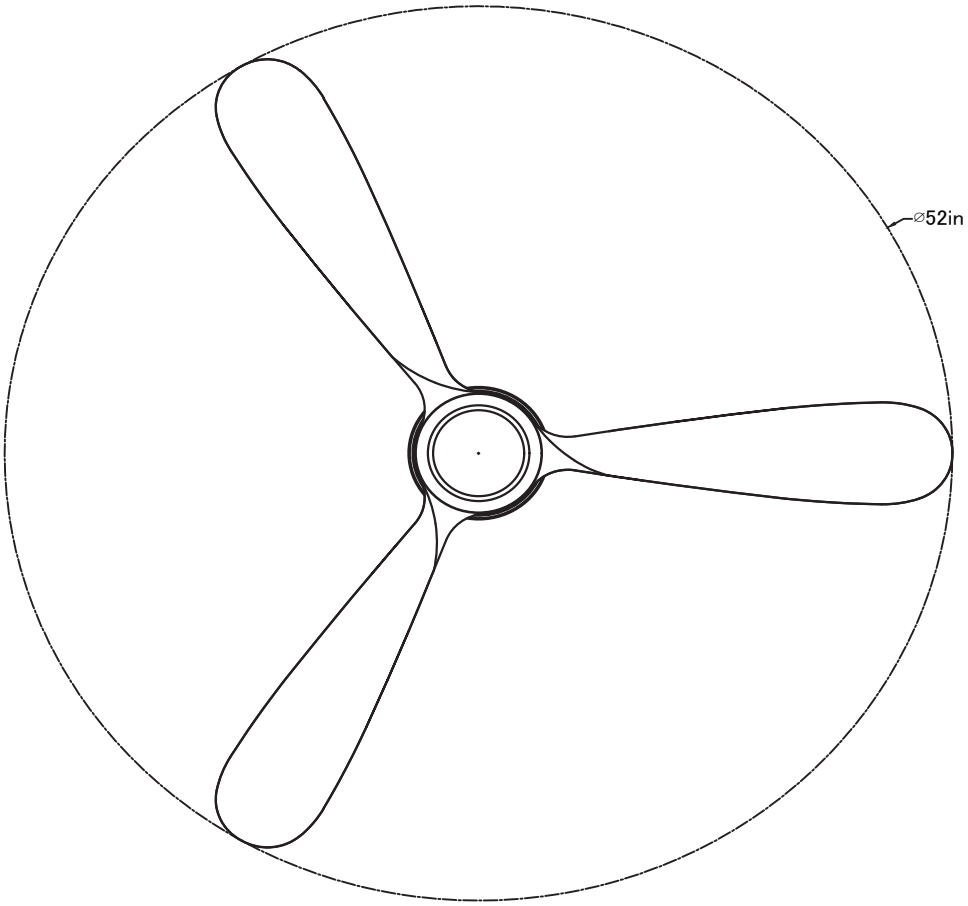

WARNING: SHUT POWER OFF AT FUSE OR CIRCUIT BREAKER

⚠ WARNING

- **INGESTION HAZARD:** This product contains a button cell or coin battery.
- **DEATH** or serious injury can occur if ingested.
- A swallowed button cell or coin battery can cause **Internal Chemical Burns** in as little as 2 hours.
- **KEEP** new and used batteries **OUT OF BEACH OF CHILDREN**
- **Seek immediate medical attention** if a battery is suspected to be swallowed or inserted inside any part of the body.



Remove and immediately recycle or dispose of used batteries according to local regulations and keep away from children.
Do NOT dispose of batteries in household trash or incinerate. Even used batteries may cause severe injury or death.
Call a local poison control center for treatment information. Compatible battery type is CR2032, 3V.
Ensure the batteries are installed correctly with regard to polarity (+ and -).
Do not mix old and new batteries, different brands or types of batteries, such as alkaline, carbon-zinc, or rechargeable batteries.
Non-rechargeable batteries are not to be recharged. Exhausted batteries are to be removed from the product.
Do not force discharge, recharge, disassemble, heat above (manufacturer's specified temperature rating) or incinerate.
Doing so may result in injury due to venting, leakage or explosion resulting in chemical burns.
Remove and immediately recycle or dispose of batteries from equipment not used for an extended period of time according to local regulations.
Always completely secure the battery compartment. If the battery compartment does not close securely, stop using the product, remove the batteries, and keep them away from children.



WARNING INGESTION HAZARD:
This product contains a button cell or coin battery.

WARNING: SHUT POWER OFF AT FUSE OR CIRCUIT BREAKER

AFTER INSTALLATION

WOBBLE"

The fan blades have been adjusted in the factory to minimize any wobble

NOTE:CEILING FANS TEND TO MOVE DURING OPERATION DUE TO THE FACT THAT THEY ARE MOUNTED ON A RUBBER CROMMET. IF THE FAN WAS MOUNTED RIGIDLY TO THE CEILING, IT WOULD CAUSE EXCESS VIBRATION. MOVEMENT OF A FEW CENTIMENTERS IS QUITE ACCEPTABLE AND DOES NOT SUGGEST ANY PROBLEM

TO REDUCE THE FAN WOBBLE: PLEASE CHECK THAT ALL SCREWS WHICH SECURED THE MOUNTING BRACKET AND DOWNROD ARE SECURE.

BALANCING A WOBBLING CEILING FAN:

1.Check that all blade and blade arm screws are secure.

2.Most fan wobbling problems are caused when blade levels are unequal. Check this level by selecting a point on the ceiling above the tip of one of the blades. Measure this distance.Rotate the fan until the next blade is positioned for measurement. Repeat for each blade. The distance deviation should be equal within 1/8"(0.32cm).

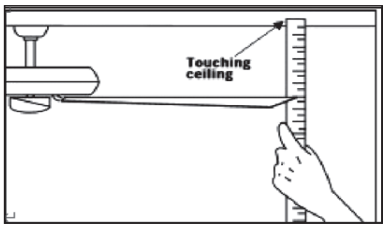

3.If the blade wobble is still noticeable, interchanging two adjacent (side by side) blades can redistribute the weight and possibly result in smoother operation. WARNING: TO REDUCE THE RISK OF PERSONAL INJURY, DO NOT BEND THE BLADE ARM WHILE INSTALLING, BALANCING THE BLADES, OR CLEANING THE FAN. DO NOT INSERT FOREIGN OBJECTS BETWEEN ROTATING FAN BLADES.

NOISE

When it is quiet(especially at night) you may hear occasional small noises. This is normal. Please allow a 24-hour "breaking-in" period, most noises associated with a new fan disappear during the time.

CARE AND CLEANING

1.Periodic cleaning of your ceiling fan is the only maintenance required. Use a soft brush or lint free cloth to avoid scratching the paint finish. Please make sure to turn off electricity power before you clean your fan

2.Do not use water when cleaning your ceiling fan. It could damage the motor or the blades and create the possibility of an electrical shock.

3.Motor has permanently lubricated ball bearing. No need to oil

NOTE: MAKE SURE THE POWER IS OFF AT THE ELECTRICAL PANEL BOX BEFORE YOU ATTEMPT ANY CLEANING OR REPAIRS.



Time slows where design feels right.