

SWITCHDRIVER™

20V MAX LITHIUM

Cordless Drill / Driver	**EN**	**P05**
Perceuse/tournevis sans	**F**	**P13**
Taladro inalambrico	**ES**	**P22**

HELPLINE NUMBER
NUMÉRO DU SERVICE D'ASSISTANCE
NÚMERO DE LÍNEA DE AYUDA
1-866-354-WORX (9679)

WX176L WX176L.1 WX176L.2 WX176L.9

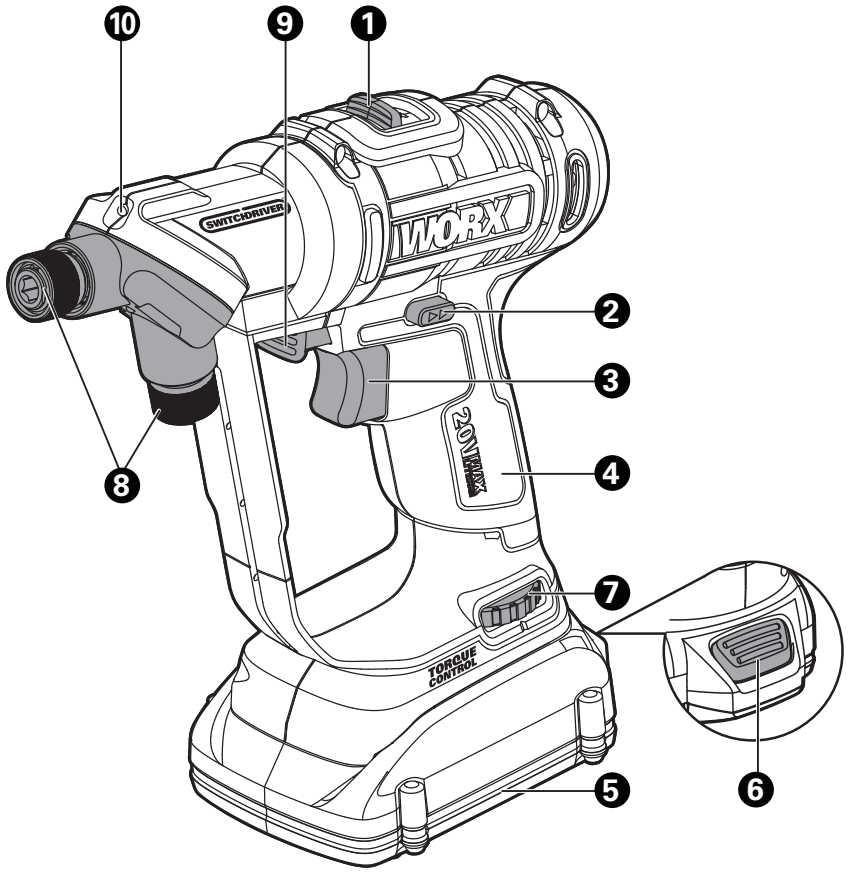
10
9
1
SWITCHDRIVER
WORX
2
3
20V MAX
4
8
7
TORQUE CONTROL
5
6

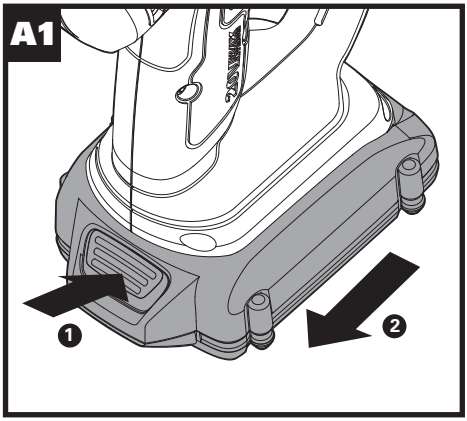
A1
1
2

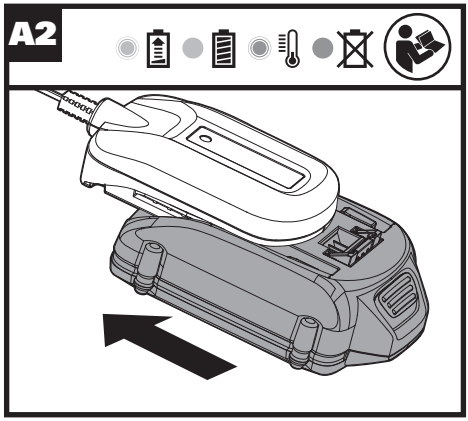
A2

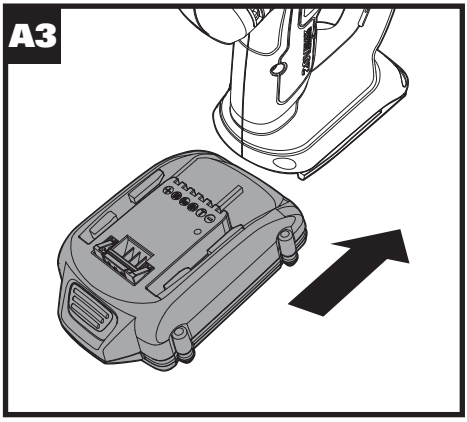
A3

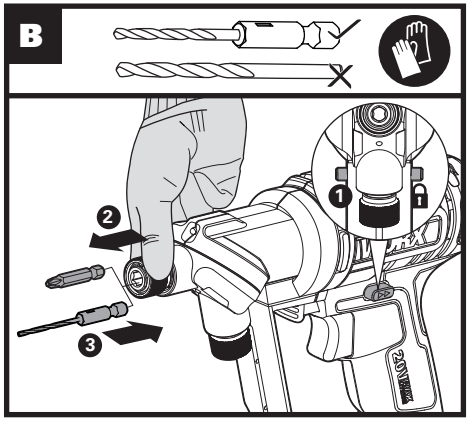
B
1
2
3

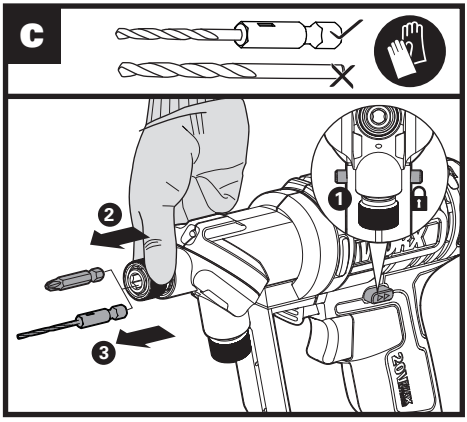
C
1
2
3

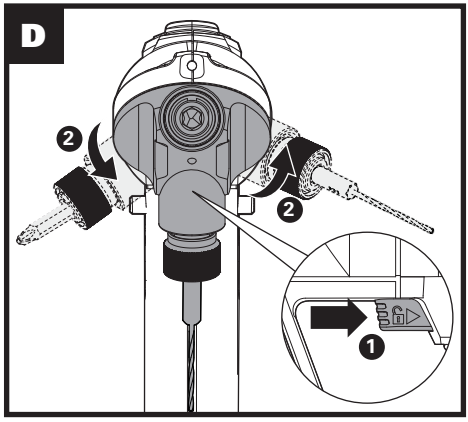
D
1
2
2

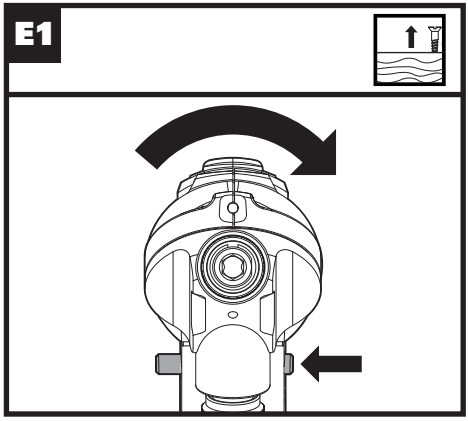
E1

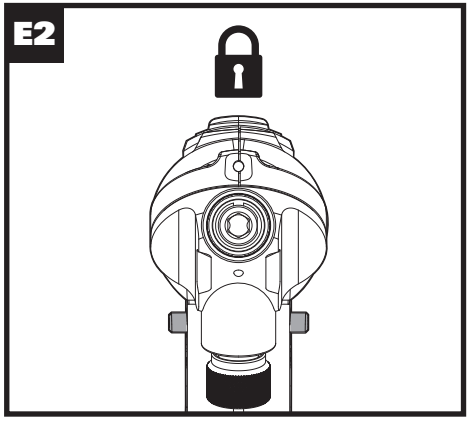
E2

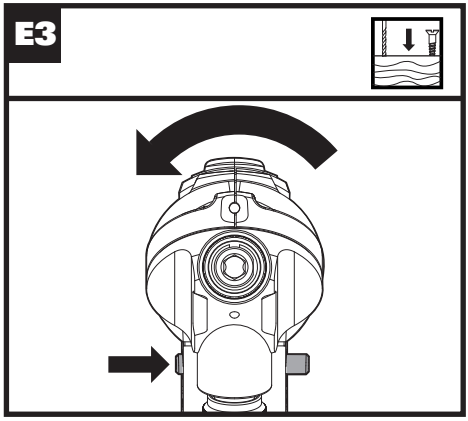
E3

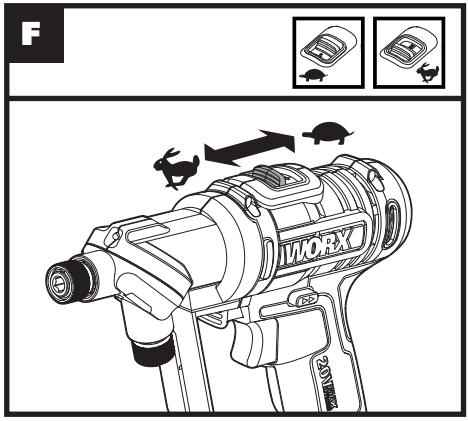
F
WORX
20V MAX

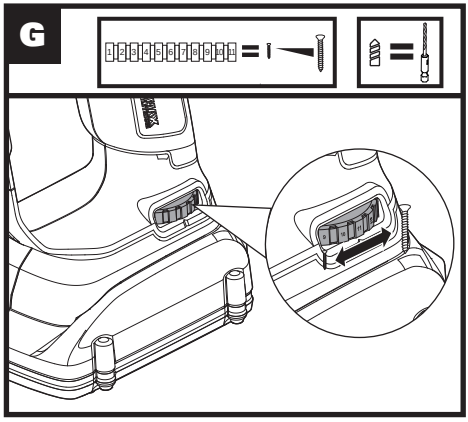
G

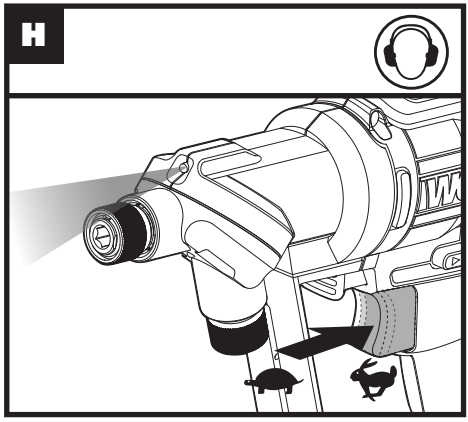
H

1. TWO-SPEED GEAR CONTROL
2. FORWARD/REVERSE ROTATION CONTROL
3. ON/OFF SWITCH
4. SOFT GRIP HANDLE
5. BATTERY PACK
6. BATTERY PACK RELEASE BUTTON
7. ELECTRONIC TORQUE-ADJUSTING DIAL
8. COLLET LOCKING SLEEVE
9. DUAL CHUCK RELEASE BUTTON
10. LED LIGHT

TECHNICAL DATA

		WX176L WX176L.1 WX176L.2	WX176L.9
Charger voltage		100-240V~50/60Hz	
Rated voltage		20V ⎓ Max*	
No load speed		0-400/0-1500/min	
Clutch positions		11+1	
Max torque		265 in.lbs	
Chuck capacity		1/4 inch	
Max. drilling capacity	Steel	3/8 inch	
	Wood	1-3/16 inch	
Machine weight		3.1 lbs	0.73 lbs

*Voltage measured without workload. Initial battery voltage reaches maximum of 20 volts. Nominal voltage is 18 volts.

ACCESSORIES

	WX176L	WX176L.1	WX176L.2	WX176L.9
Battery pack (WA3520)	2	2	1	/
Charger (WA3742)	1	1	1	/
1/4" Hex shrank HSS drill bit	2	/	/	/
2" Screwdriving bit	1	/	/	1
16pc accessory kit	/	/	1	/
67pc accessory kit	/	1	/	/

Not all the accessories illustrated or described are included in standard delivery.
We recommend that you purchase your accessories from the same store that sold you the tool. Use good quality accessories marked with a well-known brand name. Choose the type according to the work you intend to undertake. Refer to the accessory packaging for further details. Store personnel can assist you and offer advice.

Recommended pilot-hole size for Screws:

Gauge		2	3	4	5	6	7	8	9	10	12	14
Head-Bore Size		11/64″	13/64″	15/64″	1/4″	9/32″	5/16″	11/32″	23/64″	25/64″	7/16″	1/2″
Shank-Hole Size		3/32″	7/64″	7/64″	1/8″	9/64″	5/32″	5/32″	11/64″	3/16″	7/32″	1/4″
Pilot-Hole Size	Hard-wood	1/16″	1/16″	5/64″	5/64″	3/32″	7/64″	7/64″	1/8″	1/8″	9/64″	5/32″
	Soft-wood	1/16″	1/16″	1/16″	1/16″	5/64″	3/32″	3/32″	7/64″	7/64″	1/8″	9/64″

WARNING: Some dust created by power sanding, sawing, grinding, drilling and other construction activities contains chemicals known to the State of California to cause cancer, birth defects or other reproductive harm. Some examples of these chemicals are:

- Lead from lead-based paints;
- Crystalline silica from bricks and cement and other masonry products and
- Arsenic and chromium from chemically-treated lumber.

Your risk from these exposures varies, depending on how often you do this type of work. To reduce your exposure to these chemicals, work in a well ventilated area, and work with approved safety equipment, such as those dust masks that are specially designed to filter out microscopic particles.

WARNING: This product maybe contains lead, phthalate or other chemicals known to the State of California to cause cancer, birth defects and other reproductive harm. Please wash your hands after use.

GENERAL POWER TOOL SAFETY WARNINGS

WARNING: Read all safety warnings and instructions. Failure to follow the warnings and instructions may result in electric shock, fire and/or serious injury.

Save all warnings and instructions for future reference.

The term power tool in the warnings refers to your electric (corded) power tool or battery-operated (cordless) power tool.

1. WORK AREA SAFETY

a) Keep work area clean and well lit. Cluttered or dark areas invite accidents.

b) Do not operate power tools in explosive atmospheres, such as in the presence of flammable liquids, gases or dust. Power tools create sparks which may ignite the dust or fumes.

c) Keep children and bystanders away while operating a power tool. Distractions can cause you to lose control.

2. ELECTRICAL SAFETY

a) Power tool plugs must match the outlet. Never modify the plug in any way. Do not use any adapter plugs with grounded power tools. Unmodified plugs and matching outlets will reduce risk of electric shock.

b) Avoid body contact with grounded surfaces such as pipes, radiators, ranges and refrigerators. There is an increased risk of electric shock if your body is grounded.

c) Do not expose power tools to rain or wet conditions. Water entering a power tool will increase the risk of electric shock.

d) Do not abuse the cord. Never use the cord for carrying, pulling or unplugging the power tool. Keep cord away from heat, oil, sharp edges or moving parts. Damaged or entangled cords increase the risk of electric shock.

e) When operating a power tool outdoors, use an extension cord suitable for outdoor use marked "W-A" or "W". Use of a cord suitable for outdoor use reduces the risk of electric shock.

f) If operating a power tool in a damp location is unavoidable, use a Ground Fault Circuit Interrupter (GFCI) protected supply. Use of a GFCI reduces the risk of electric shock.

3. PERSONAL SAFETY

a) Stay alert, watch what you are doing and use common sense when operating a power tool. Do not use a power tool while you are tired or under the influence of drugs, alcohol or medication. A moment of inattention while operating power tools may result in serious personal injury.

b) Use personal protective equipment. Always wear eye protection. Protective equipment such as dust mask, non-skid safety shoes, hard hat, or hearing

protection used for appropriate conditions will reduce personal injuries.

c) **Prevent unintentional starting. Ensure the switch is in the off-position before connecting to power source and/or battery pack, picking up or carrying the tool.** Carrying power tools with your finger on the switch or energizing power tools that have the switch on invites accidents.

d) **Remove any adjusting key or wrench before turning the power tool on.** A wrench or a key left attached to a rotating part of the power tool may result in personal injury.

e) **Do not overreach. Keep proper footing and balance at all times.** This enables better control of the power tool in unexpected situations.

f) **Dress properly. Do not wear loose clothing or jewelry. Keep your hair, clothing and gloves away from moving parts.** Loose clothes, jewelry or long hair can be caught in moving parts.

g) **If devices are provided for the connection of dust extraction and collection facilities, ensure these are connected and properly used.** Use of dust collection can reduce dust-related hazards.

4. POWER TOOL USE AND CARE

a) **Do not force the power tool. Use the correct power tool for your application.** The correct power tool will do the job better and safer at the rate for which it was designed.

b) **Do not use the power tool if the switch does not turn it on and off.** Any power tool that cannot be controlled with the switch is dangerous and must be repaired.

c) **Disconnect the plug from the power source and/or the battery pack from the power tool before making any adjustments, changing accessories, or storing power tools.** Such preventive safety measures reduce the risk of starting the power tool accidentally.

d) **Store idle power tools out of the reach of children and do not allow persons unfamiliar with the power tool or these instructions to operate the power tool.** Power tools are dangerous in the hands of untrained users.

e) **Maintain power tools. Check for misalignment or binding of moving parts, breakage of parts and any other condition that may affect the power tool`s operation. If damaged, have the power tool repaired before use.** Many accidents are caused by poorly maintained power tools.

f) **Keep cutting tools sharp and clean.** Properly maintained cutting tools with sharp cutting edges are less likely to bind and are easier to control.

g) **Use the power tool, accessories and tool bits etc., in accordance with these instructions and in the manner intended for the particular type of power tool, taking into account the working conditions and the work to be performed.** Use of the power tool for operations different from those intended could result in a hazardous situation.

5. BATTERY TOOL USE AND CARE

a) **Recharge only with the charger specified by the manufacturer.** A charger that is suitable for one type of battery pack may create a risk of fire when used with another battery pack.

b) **Use power tools only with specifically designated battery packs.** Use of any other battery packs may create a risk of injury and fire.

c) **When battery pack is not in use, keep it away from other metal objects, like paper clips, coins, keys, nails, screws or other small metal objects, that can make a connection from one terminal to another.** Shorting the battery terminals together may cause burns or a fire.

d) **Under abusive conditions, liquid may be ejected from the battery; avoid contact. If contact accidentally occurs, flush with water. If liquid contacts eyes, additionally seek**

medical help. Liquid ejected from the battery may cause irritation or burns.

6. **SERVICE**

a) **Have your power tool serviced by a qualified repair person using only identical replacement parts.** This will ensure that the safety of the power tool is maintained.

DRILL SAFETY WARNINGS

1. **Use auxiliary handle(s), if supplied with the tool.** Loss of control can cause personal injury.
2. **Hold power tool by insulated gripping surfaces, when performing an operation where the cutting accessory may contact hidden wiring.** Cutting accessory contacting a "live" wire may make exposed metal parts of the power tool "live" and could give the operator an electric shock.

GENERAL SAFETY WARNINGS FOR BATTERY PACK

1) **WARNING: Risk of fire and burns. Do not disassemble, heat above 100°C (212°F), or incinerate. Do not expose cells or batteries to heat or fire. Avoid storage in direct sunlight.**
2) **Dispose of used battery promptly.. When disposing of secondary cells or batteries, keep cells or batteries of different electrochemical systems separate from each other.**
3) **Keep battery out of reach of children and in original package until ready to use.**
4) **Never put batteries in mouth. If swallowed, contact your physician or local poison control center.**
5) **CAUTION – The battery used in this device may present a risk of fire or chemical burn if mistreated. Replace battery with (WORX) only. Use of another battery may present a risk of fire or explosion.**
6) **WARNING: Do not use a visibly damaged battery pack or appliance as applicable.**
7) **WARNING: Do not modify or attempt to repair the appliance or the battery pack as applicable.**
8) **BATTERY MUST BE RECYCLED**
9) **Do not short-circuit a cell or battery. Do not store cells or batteries haphazardly in a box or drawer where they may short-circuit each other or be short-circuited by conductive materials.**
10) **Do not subject cells or batteries to mechanical shock.**
11) **Keep cells and batteries clean and dry.** Wipe the cell or battery terminals with a clean dry cloth if they become dirty.
12) **Do not maintain secondary cells and batteries on charge when not in use.**
13) **Retain the original cell and battery literature for future reference.**
14) **Do not use any charger other than that specifically provided for use with the equipment. Secondary cells and batteries need to be charged before use.** Always use the correct charger and refer to the manufacturer's instructions or equipment manual for proper charging instructions.
15) When possible, remove the battery from the equipment when not in use.
16) Prevent unintentional starting. Ensure the switch is in the off-position before connecting to battery pack, picking up or carrying the appliance. Carrying the appliance with your finger on the switch or energizing appliance that have the switch on invites accidents.
17) Disconnect the battery pack from the appliance before making any adjustments, changing accessories, or storing appliance. Such preventive safety measures reduce the risk of starting the appliance accidentally.

SYMBOLS

	To reduce the risk of injury, user must read instruction manual
	Warning
	Wear ear protection
	Wear eye protection
	Wear dust mask
	Wear protective gloves
	Do not expose to rain or water.
	Do not burn
	Li-Ion battery. Separate collection, and battery must be recycled
	Great torque
	Small torque

	Wood
	Metal
	High speed
	Low speed



call2recycle®

POSITEC Inc. has established a partnership with the RBRC Corporation to recycle any Positec batteries with the RBRC-call2recycle seal. For environmental protection, please do not discard batteries in the trash. After the batteries' life cycle is ended, then please call 1-800-822-8837 for a free service that will properly dispose of the battery.

OPERATING INSTRUCTIONS

NOTE: Before using the tool, read the instruction book carefully.

INTENDED USE

The machine is intended for drilling (including pilot hole) in wood, metal and plastic as well as for driving and removing fasteners.

ASSEMBLY AND OPERATION

ACTION	FIGURE
BEFORE OPERATION	
Removing the Battery Pack	See Fig. A1
Charging the Battery Pack More details can be found in charger's manual	See Fig. A2
Installing the Battery Pack	See Fig. A3
ASSEMBLY	
Inserting the Bits	See Fig. B
Removing the Bits	See Fig. C
OPERATION	
Rotating the Dual Chuck	See Fig. D
Forward/reverse Rotation Control **WARNING:** Never change the direction of rotation when the chuck is rotating, wait until it has stopped!	See Fig. E1, E2, E3
Two-speed Gear Control **WARNING:** To prevent gear damage, always allow the chuck to come to a complete stop before changing gears.	See Fig. F
Drilling/driving Torque Setting	See Fig. G
On/off Switch **WARNING:** Do not operate for long periods at low speed because excess heat will be produced internally.	See Fig. H
Using the LED light **WARNING:** To turn on the light, press the On/Off Switch and make sure the Forward/Reverse Rotation Control is on right/left position. The LED Light is also a battery capacity indicator. It will flash when power gets low.	See Fig. H

DISPOSAL OF AN EXHAUSTED BATTERY PACK



To preserve natural resources, please recycle or dispose of the Battery Pack properly. This Battery Pack contains Lithium batteries. Consult your local waste authority for information regarding available recycling and/or disposal options. Discharge your Battery Pack by operating your drill, then remove the Battery Pack from the drill housing and cover the Battery Pack connections with heavy-duty adhesive tape to prevent short circuit and energy discharge. Do not attempt to open or remove any of the components.

TROUBLESHOOTING

1. WHY DOES THE DRILL NOT TURN ON WHEN YOU PRESS THE SWITCH?

The Forward/Reverse Rotation Control, which is on top of the trigger, is positioned in the lock function. Unlock the Forward/Reverse Rotation Control by putting it into the required rotation position. Push the trigger and the drill will start to rotate.

2. THE DRILL STOPS BEFORE THE SCREW IS COMPLETELY TIGHTENED. WHY?

Verify the torque position of the Electronic Torque-Adjusting Dial. Find the Electronic Torque-Adjusting Dial (7) at the end of the soft grip handle. Position 1 is the lowest torque (screw driving force) and position 11 is the highest torque (screw driving force). Position is for drilling operation. Regulate the Electronic Torque-Adjusting Dial to a higher position to reach better result.

3. REASONS FOR DIFFERENT BATTERY PACK WORKING TIMES

Charging time problems, and having not used a Battery Pack (8) for a prolonged time will reduce the Battery Pack working time. This can be corrected after several charge and discharge operations by charging & working with your drill. Heavy working conditions such as large screws into hard wood will use up the Battery Pack energy faster than lighter working conditions. Do not re-charge your Battery Pack below 32° F (0°C) and above 113° F (45°C) as this will affect performance.

4. WHY DRILL BITS CAN NOT BE INSERTED INTO THE COLLET?

Only 1/4" hex bits will work with this collet. We recommend that you use the dills/bits like those supplied with your Drill N Drive.

5. WHY DOES THE DRILL NOT WORK AFTER ROTATING THE DUAL CHUCK.

The drill can work only when the Dual Chuck is in right position as shown in Fig. H. When the Dual Chuck reaches proper position, you can hear a "click" sound.

MAINTENANCE

Remove the battery pack from the tool before carrying out any adjustment, servicing or maintenance.

Your tool requires no additional lubrication or maintenance.

There are no user serviceable parts in your power tool. Never use water or chemical cleaners to clean your power tool. Wipe clean with a dry cloth. Always store your power tool in a dry place. Keep the motor ventilation slots clean. Keep all working controls free of dust. Occasionally you may see sparks through the ventilation slots. This is normal and will not damage your power tool.

CAUTION/ATTENTION/PRECAUCIÓN



LITHIUM ION BATTERY
BATTERIE AU LITHIUM-ION
BATERÍA DE ION DE LITIO



Do Not Load or Transport Package if Damaged
Il est interdit de charger ou de transporter le paquet s'il est endommagé
No cargue o transporte el paquete si está dañado

For more information, call / Pour plus d'informations, appelez-le / Para mayor información, llame al
Within USA and Canada / Aux États-Unis et au Canada / Dentro de EUA y Canadá: 1-800-424-9300
Outside USA and Canada /Hors des États-Unis et du Canada / Fuera de EUA y Canadá: +1-703-741-5970
Non Emergency / Hors urgence / No Emergencia: 855-694-2388

WORX

you've got the power

www.worx.com

Copyright © 2015, Positec. All Rights Reserved.
Copyright © 2015, Positec. Tous droits réservés.
© Derechos reservados 2015, Positec. Todos los derechos reservados.
AR01002702