Installation, Operation, and Maintenance Instructions

Electric Range

Models:

R30S

RI30S, RI30C (Induction Range Top)

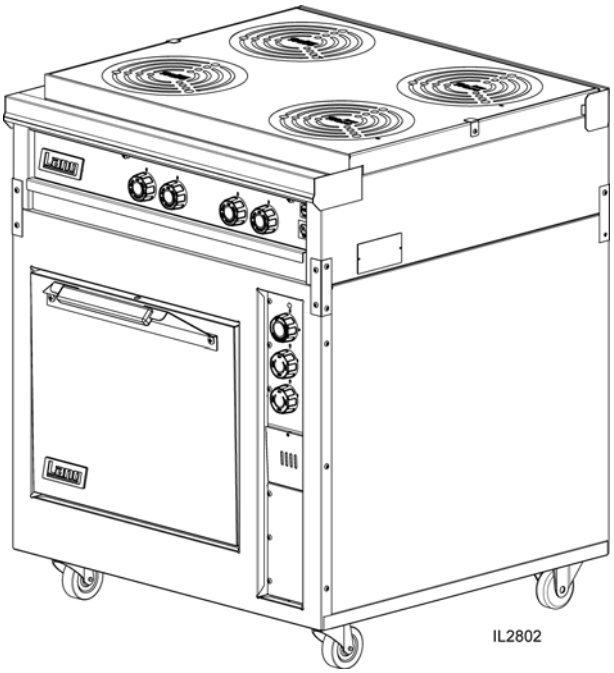

Lang Manufacturing
10 Sunnen Drive
St. Louis, MO.63143-3800
Ph: 314-678-6315 Fax: 314-781-2714
www.langworld.com

Part Number: 2M-W1098
Rev.A
March 7, 2014

Safety

	THE GRIDDLE IS EXTREMELY HEAVY. FOR SAFE HANDLING, INSTALLER SHOULD OBTAIN HELP AS NEEDED, OR EMPLOY APPROPRIATE MATERIALS HANDLING EQUIPMENT (SUCH AS A FORKLIFT, DOLLY, OR PALLET JACK) TO REMOVE THE UNIT FROM THE SKID AND MOVE IT TO THE PLACE OF INSTALLATION.
CAUTION	ANY STAND, COUNTER OR OTHER DEVICE ON WHICH GRIDDLE WILL BE LOCATED MUST BE DESIGNED TO SUPPORT THE WEIGHT OF THE GRIDDLE.
	SHIPPING STRAPS ARE UNDER TENSION AND CAN SNAP BACK WHEN CUT.
DANGER:	THIS APPLIANCE MUST BE GROUNDED AT THE TERMINAL PROVIDED. FAILURE TO GROUND THE APPLIANCE COULD RESULT IN ELECTROCUTION AND DEATH.
WARNING	INSTALLATION OF THE UNIT MUST BE DONE BY PERSONNEL QUALIFIED TO WORK WITH ELECTRICITY. IMPROPER INSTALLATION CAN CAUSE INJURY TO PERSONNEL AND/OR DAMAGE TO EQUIPMENT. UNIT MUST BE INSTALLED IN ACCORDANCE WITH ALL APPLICABLE CODES.
NOTICE	The data plate is on top of the control box. The griddle voltage, wattage, serial number, wire size, and clearance specifications are on the data plate. This information should be carefully read and understood before proceeding with the installation.
NOTICE	The installation of any components such as a vent hood, grease extractors, fire extinguisher systems, must conform to their applicable National, State and locally recognized installation standards.
NOTICE	During the first few hours of operation, you may notice a small amount of smoke coming off the unit, and a faint odor from the smoke. This is normal for a new griddle and will disappear after the first few hours of use.
CAUTION	ALWAYS KEEP THE AREA NEAR THE APPLIANCE FREE FROM COMBUSTIBLE MATERIALS.
CAUTION	KEEP FLOOR IN FRONT OF EQUIPMENT CLEAN AND DRY. IF SPILLS OCCUR, CLEAN IMMEDIATELY, TO AVOID THE DANGER OF SLIPS OR FALLS.

WARNING **KEEP WATER AND SOLUTIONS OUT OF CONTROLS. NEVER SPRAY OR HOSE CONTROL CONSOLE, ELECTRICAL CONNECTIONS, ETC.**

CAUTION **MOST CLEANERS ARE HARMFUL TO THE SKIN, EYES, MUCOUS MEMBRANES AND CLOTHING. WEAR RUBBER GLOVES, GOGGLES OR FACE SHIELD AND PROTECTIVE CLOTHING. CAREFULLY READ THE WARNING AND FOLLOW THE DIRECTIONS ON THE LABEL OF THE CLEANER TO BE USED.**

NOTICE **Service on this or any other Lang appliance must be performed by qualified personnel only. Consult your Lang Authorized Service Agent Directory. You can call our toll free number 314-678-6315 or visit our website** www.langworld.com **for the service agent nearest you.**

WARNING **BOTH HIGH AND LOW VOLTAGES ARE PRESENT INSIDE THIS APPLIANCE WHEN THE UNIT IS PLUGGED/WIRED INTO A LIVE RECEPTACLE. BEFORE REPLACING ANY PARTS, DISCONNECT THE UNIT FROM THE ELECTRIC POWER SUPPLY.**

CAUTION **USE OF ANY REPLACEMENT PARTS OTHER THAN THOSE SUPPLIED BY LANG OR THEIR AUTHORIZED DISTRIBUTORS CAN CAUSE BODILY INJURY TO THE OPERATOR AND DAMAGE TO THE EQUIPMENT AND WILL VOID ALL WARRANTIES.**

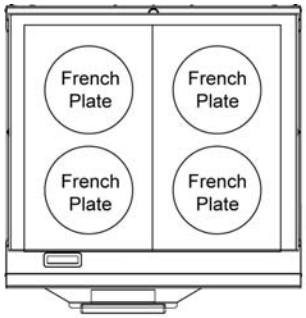

R30S-ATA

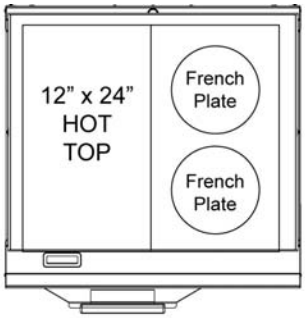

R30S-ATB

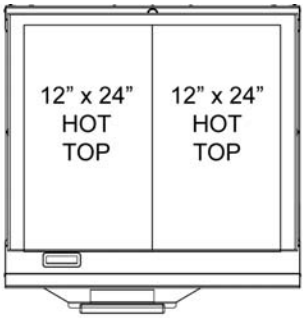

R30S-ATC

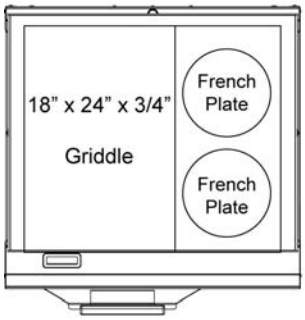

R30S-ATD

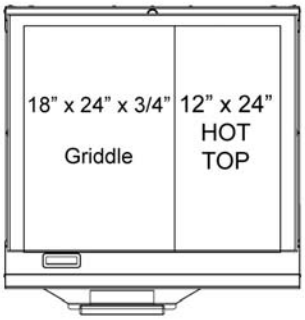

R30S-ATD

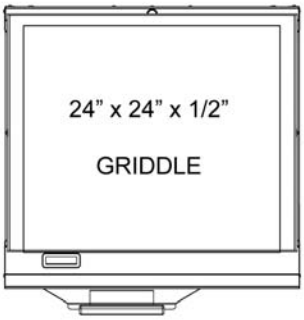

R30S-ATE

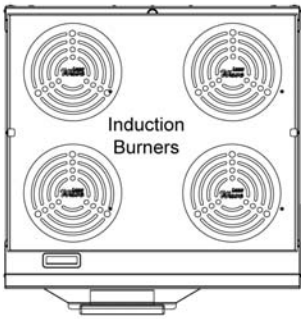

RI30C & RI30S

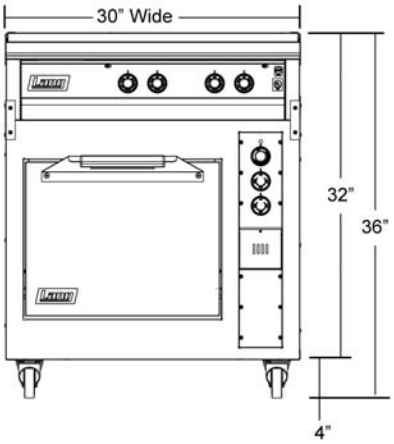

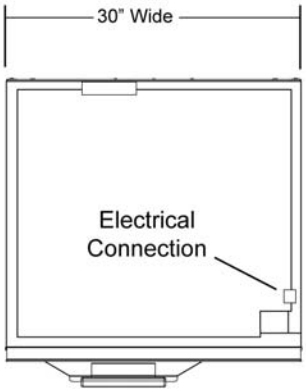

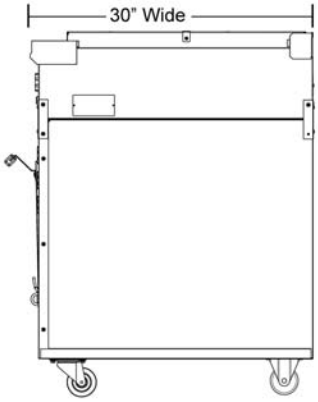

SPACING REQUIREMENTS
3" at sides and back
from combustible surfaces

IL2803

ELECTRICAL DATA FOR 32S SERIES RANGES																SHIPPING WEIGHT
MODEL NO.	3PH LOADING			TOTAL kW	NORMAL AMPS PER LINE											
					THREE PHASE									SINGLE PHASE		
					208V			240V			480V			208V	240V	
	L1-L2	L2-L3	L3-L1		L1	L2	L3	L1	L2	L3	L1	L2	L3			
R30S, RI30S	5.0	5.0	4.0	14.0	37.5	41.7	37.5	32.5	36.1	32.5	16.3	18.1	16.3	67.3	58.3	370 LBS

OPERATING INSTRUCTIONS
RANGE TOPS

Electric range tops consist of various top arrangements, depending upon the specific models purchased.

Options include
1.) 12" x24" hot plates
2.) Round speed units
3.) Griddles
4.) Induction Burners

Three position switches, thermostats, or infinite controls independently control these units.

All thermostats are used in conjunction with a red indicator or pilot lamp. When the light is on the elements are energized and bringing the plate to the temperature set on the thermostat. When the light is off the plate has reached the temperature set on the thermostat. Griddle pilot lights should be allowed to cycle at least twice before usage.

Recommended Usage:
1.) 12" x 24" hot plates. - Heavy stockpots and kettles.
2.) French Plates- Light duty saucepans and small stockpots.
(NOT recommended for large stockpots.)
3.) Griddles - Used for grilling product directly on surface.

CAUTION

All hot plates and speed units should be turned to the low or off position when not in use. Allowing these elements to stay in the full on or high position with nothing on top to absorb and dissipate the heat is detrimental to element life. Lang warranty provisions do not cover abuse of this nature.

INITIAL START-UP

Hot Plates

To “dry out” the hot plate, set the thermostat dial at 250°F and turn on the power switch. Allow unit to cycle at least 15 minutes at this heat level. Reset the thermostat to 350°F allowing the same time. Then reset the thermostat to 450°F allowing the same time. Continue doing this until you reach 850°F then allow the unit to maintain this temperature for a minimum of 4 hours. More time may be required if the unit has to operate in a moist environment.

If the unit is out of use for three or more days, a one-hour preheat schedule should be used, especially when exposed to high humidity and/or cool temperatures.

French Plates

To “dry out” the French plate, set the six-heat switch to the first setting and turn on the power switch. Allow unit to cycle at least 15 minutes at this heat level. Reset the six-heat switch to position 2 and allow the same time. Reset the six-heat switch to position 3 and allow the same time. Continue doing this until you reach position 6 then allow the unit to maintain the temperature for a minimum of 4 hours. More time may be required if the unit has to operate in a moist environment.

If the unit is out of use for three or more days, a one-hour preheat schedule should be used, especially when exposed to high humidity and/or cool temperatures.

Induction Burners

Induction requires cookware that is induction efficient or that is made for use on an induction surface. Generally speaking if a magnet attracts and strongly adheres to the pan bottom it will generally work on an induction surface. This is a requirement for proper use.

DO NOT USE WITH EMPTY PANS.

To operate unit turn the knob clockwise and a small digital number will appear next to the hotplate to be cooked on. The higher the number the faster the heat up. Heating will begin when the pan surface comes in contact with the induction surface and will cease when the pan is removed. **Note: surface will remain hot for a certain period of time after the pan is removed.**

Induction module, controlled by variable heat control. Great for rapid heat-up, it will generally boil water, heat sauces or soups in about half the time of a French Plate. Use caution placing items on the glass cook surface, always wipe down glass with mild soap and water to keep the unit clean.

Griddles

To “dry out” the griddle, set the thermostat to 250°F and turn on the power switch. Allow the unit to cycle at least 15 minutes at this heat level. Reset the thermostat to 350°F allow the same time. Reset the thermostat to 450°F and allow the unit to maintain the temperature for a minimum of 4 hours. More time may be required if the unit has to operate in a moist environment.

If the unit is out of use for three or more days, a one-hour preheat schedule should be used, especially when exposed to high humidity and/or cool temperatures.

OPERATING INSTRUCTIONS

COMMERCIAL ELECTRIC RANGE

General

The range is designed to give, well-regulated, uniform heat throughout the oven and over the surface units. The oven and surface units should be thoroughly preheated before being used. It is advantageous from an operating cost standpoint to operate with the switches and/or thermostats set at the lowest position that will satisfactorily perform the cooking being done.

Initial Use

Before the initial use of the range, the oven must be thoroughly allowed to dry itself out. This is done by setting the top and bottom oven switches to the “low” position, and setting the thermostat to 350°F. Allow the range oven to saturate until all vapors and condensation have been eliminated. For best operating results allow the range oven to thoroughly dry out. Allow 8 to 12 hours for this process. Clean top plates thoroughly. Apply salad oil. Turn each plate switch or thermostat to a low position and allow plate to heat for three hours.

Range Controls

Three heat switches or automatic thermostats control the top plate units. The range is provided with an upper heating unit located in the top of the oven and a lower heating unit located under the metal deck, in the bottom of the oven. Each heating unit is independently regulated for proper ratio of "top" and "bottom" heat, to suit the product being baked or roasted, by means of two 3-heat switches located in the panel at the right of the range. The range oven is also provided with an adjustable, automatic temperature control, the dial, which is located in the range switch panel. The setting of the control dial establishes the average temperature to be maintained in the range oven.

Operation

The range oven must be thoroughly, preheated before satisfactory baking can be done. The range oven will not bake uniformly if not sufficiently preheated. To compensate for temperature drop when loading the range oven, set the thermostat up 50 degrees over the desired temperature. Reset thermostat after the range is loaded. The range oven may be preheated with the three (3) heat switches set at a lower position than "High", but the time required will be proportionally longer. After preheating, set both three (3) position heat switches for proper ratio of "top" and "bottom" heat to suit the product to be baked or roasted.

The 12" high "Roasting and Baking" range oven is equipped with a removable rack. For baking pies, bread, or for roasting operations, the rack may be placed directly on the metal deck and the pans placed on the rack. For baking cakes or pastries, the rack should be located in the lower position provided by the rack supports at the sides of the range and the pans placed on the rack in this lower position.

The following temperature, time, switch setting and rack positions are suggested as a guide in baking various classes of products:

General Class of Product	Average Range Temperature	Time (Min.)	With Metal Switch Settings Top	Bottom	Rack Position
Pies	375°F -425°F	35-60	Low	Medium	Rack on Deck
Rolls	375°F -400°F	15-30	Low	High	Rack Support
Cake	350°F -400°F	20-45	Low	High	Rack Support
Pastries	325°F -375°F	8-20	Low	High	Rack Support
Bread	425°F -450°F	25-45	Low	Medium	Rack on Deck
Roast Beef	300°F -325°F		Low	High or Medium	Rack on Deck

Always place the pans symmetrically on the rack for best results. Keep the oven door closed as much as possible. Excessive door opening will cool the front section of the oven and products placed near the front are likely to bake slower. It is desirable to keep the front edge of the pans at least several inches back from the inside of the door (when closed). Do not permit air from a window or fan to blow into the oven; it will cause uneven heating.

Range Top

Consists of the various top arrangements, depending on specific model purchased:

12" x 24" hot plate controlled by indicating type three (3) heat switch or high temperature thermostats. Temperature range 0-800°F (-18°C-427°C). Recommended: Stockpots and heavy kettle work.

Round Speed Units, controlled by indicating type 3-heat switch. Temperature range is 0-800°F (-18°C-427°C) Recommended: Light duty saucepans and small stockpots. Not Recommended: heavy stockpots, heavy urns, or kettles.

12" x 24" or 24" x 24" grill plates, controlled by thermostats. Temperature range is 0-450°F (-18°C -232°C). Recommended: All heavy and light frying. Set the thermostat dial at the desired temperature. The red pilot light will be on until the desired temperature is reached. The pilot light indicates when the plate is heating.

Care and Cleaning

The range should be thoroughly cleaned at least once a week in addition to the normal daily cleaning to insure against the accumulation of foreign material. Keep inside of oven and metal deck clean, particularly around door opening, door edges and at bottom of door opening so that the door may close tightly. CAUTION: ANY OVEN CLEANER USED SHOULD BE MARKED: "SAFE ON ALUMINUM."
Keep-drip pans under range top plates clean.
Keep hotplate and griddle surfaces clean.
Outside of range and top should be kept clean.

Electric equipment is clean and sanitary, but may become unsanitary if dirt is allowed to accumulate on it. Take advantage of the clean, sanitary features of electric equipment, give it the regular attention that it deserves, the same as any other highly perfected machinery, to insure best results and continued high operating efficiency.
How to Order Parts
Be sure to give the SERIAL NUMBER of the range, when ordering parts. If a switch is required, state for what size plate of the top surface or state if it is for the oven. Give description of other parts.

STAR MODEL DESIGNATION	PREVIOUS MODEL DESIGNATION	TOP ARRANGEMENT	
		SECTION 1	SECTION 2
R30S-ATA	32S-1	C	C
R30S-ATB	32S-2 & 32S-2M(H)	B	C
R30S-ATC	32S-3 & 32S-3M(H)	B	B
R30S-ATD	32S-2M(G)	A (18")	C
R30S-ATE	32S-3M(G)	B	A (18")
R30S-ATF	32S-4 & 32S-4M	A (30")	

REVISION BLOCK						
REV	ECN NO.	DESCRIPTION	DR:	MFG	ENG	DATE
C	6XXX	REVISED & REDRAWN IN CAD	LRC			3/20/08

TOP SECTION WIRING DIAGRAMS

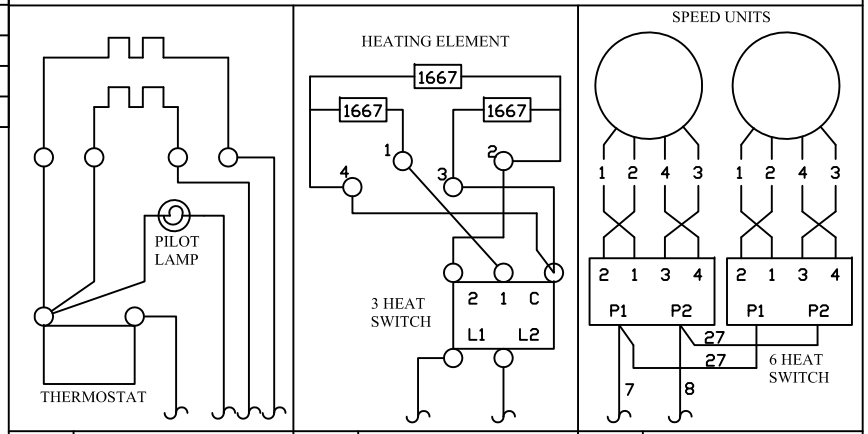

A	GRILL (18" OR 30")	B	HOT PLATE	C	FRENCH PLATES

OVEN WIRING DIAGRAM.

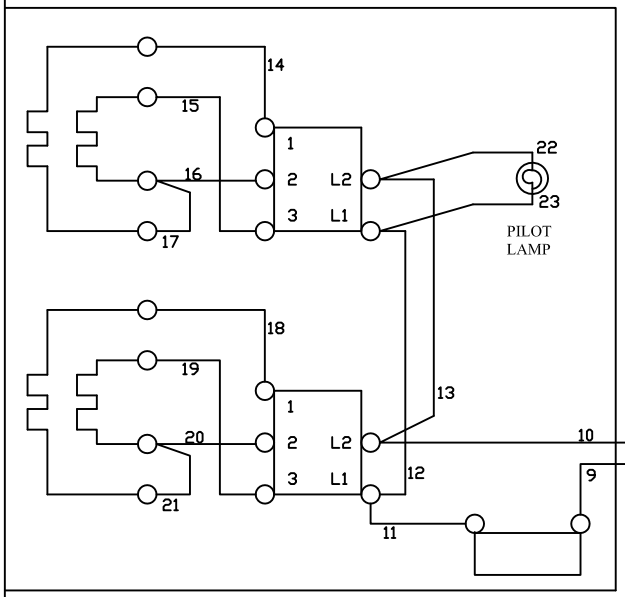

1	2	3	4

CIRCUIT BREAKERS

EXAMPLE FOR DETERMINING THE WIRING OF A LANG RANGE:

(1) VIEWED FROM THE FRONT, LEFT TO RIGHT, THE TOP 12 OR 18 INCH SECTIONAL ARRANGMENT FOR AN R30S-ATD RANGE IS A (18") AND C (SEE TOP ARRANGMENT CHART). EACH OF THE LETTERS REPRESENT ONE OF THE TOP SECTION WIRING DIAGRAMS ABOVE. R30S-ATF IS ONE 30" SECTION - GRIDDLE OPTION ONLY - & HAS 2 HEATING ELEMENTS AND FOUR POWER INPUT LEADS.

(2)THE POWER INPUT LEADS TO EACH SECTION AND THE OVEN ARE SHOWN AT LEFT CONNECTED TO THEIR RESPECTIVE CIRCUIT BREAKERS.

(3) SEE SERVICE CONNECTION CHART FOR PROPER CONNECTION OF CIRCUIT BREAKERS TO POWER SUPPLY.

SERVICE CONNECTION		
SINGLE PHASE	L1	1, 3
	L2	2, 4
THREE PHASE	L1	1,4
	L2	2
	L3	3

QTY	ITEM	PART NUMBER	DESCRIPTION / MATERIAL

LANG MANUFACTURING

DR: SRC DATE:6-25-01
CK: DATE:

TOLERANCES
FRACTIONS ± 1/64 — DECIMALS .X ± .05, .XX ± .03, .XXX ± .015
ANGLES ± .5°
UNLESS OTHERWISE SPECIFIED DIMENSIONS ARE IN INCHES

SCALE: N/A

TITLE: 32 SERIES RANGE

208–240 VOLT AC

NEXT HIGHER ASSY. | SHEET 1 OF 1 | DRAWING NUMBER 61101–10 | REV C

STAR MODEL DESIGNATION	PREVIOUS MODEL DESIGNATION	TOP ARRANGEMENT	
		SECTION 1	SECTION 2
R30S-ATA	32S-1	C	C
R30S-ATB	32S-2 & 32S-2M(H)	B	C
R30S-ATC	32S-3 & 32S-3M(H)	B	B
R30S-ATD	32S-2M(G)	A (18")	C
R30S-ATE	32S-3M(G)	B	A (18")
R30S-ATF	32S-4 & 32S-4M	A (30")	

OVEN WIRING DIAGRAM.

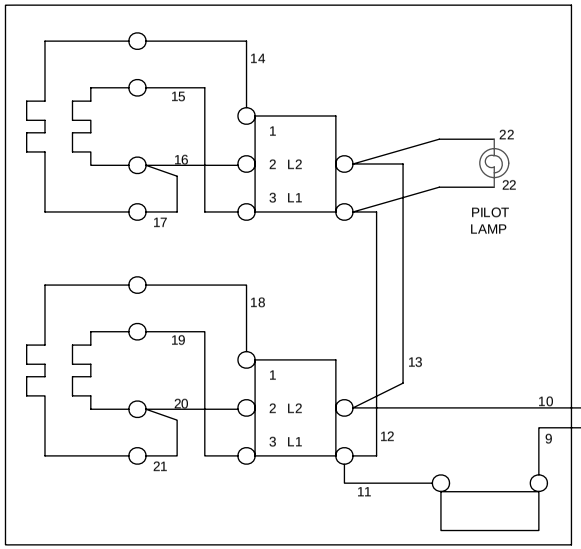

CIRCUIT BREAKERS

TOP SECTION WIRING DIAGRAMS

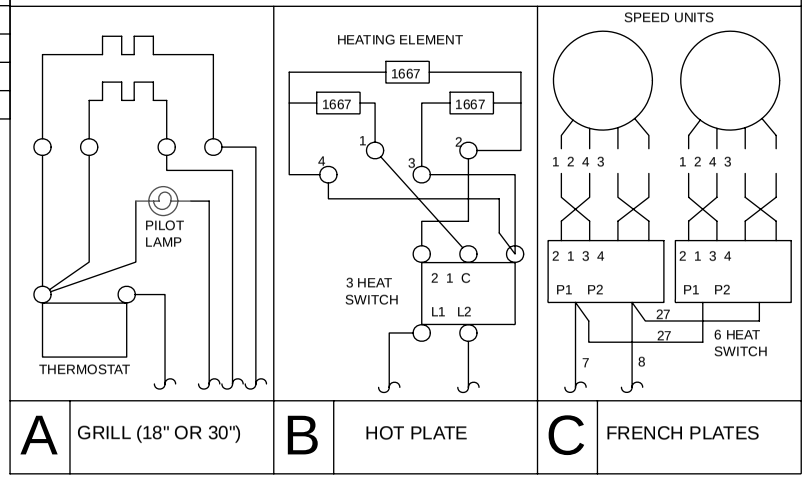

EXAMPLE FOR DETERMINING THE WIRING OF A LANG RANGE:

(1) VIEWED FROM THE FRONT, LEFT TO RIGHT, THE TOP 12 OR 18 INCH SECTIONAL ARRANGMENT FOR AN R30S-ATD RANGE IS A (18") AND C (SEE TOP ARRANGMENT CHART). EACH OF THE LETTERS REPRESENT ONE OF THE TOP SECTION WIRING DIAGRAMS ABOVE. R30S-ATF IS ONE 30" SECTION - GRIDDLE OPTION ONLY - & HAS 2 HEATING ELEMENTS AND FOUR POWER INPUT LEADS.

(2)THE POWER INPUT LEADS TO EACH SECTION AND THE OVEN ARE SHOWN AT LEFT CONNECTED TO THEIR RESPECTIVE CIRCUIT BREAKERS.

(3) SEE SERVICE CONNECTION CHART FOR PROPER CONNECTION OF CIRCUIT BREAKERS TO POWER SUPPLY.

SERVICE CONNECTION	
L1	1
L2	2
L3	3

THIS DRAWING CONTAINS INFORMATION CONFIDENTIAL TO STAR MFG. INT'L. INC.
NO REPRODUCTION OR DISCLOSURE OF ITS CONTENTS IS PERMITTED.

MODELS:
32Series Range 480VAC
R30 Series Range 480VAC

Lang™
A Division of Star Mfg. Int'l, Inc.

2M-61101-07 Rev B 3/28/2008

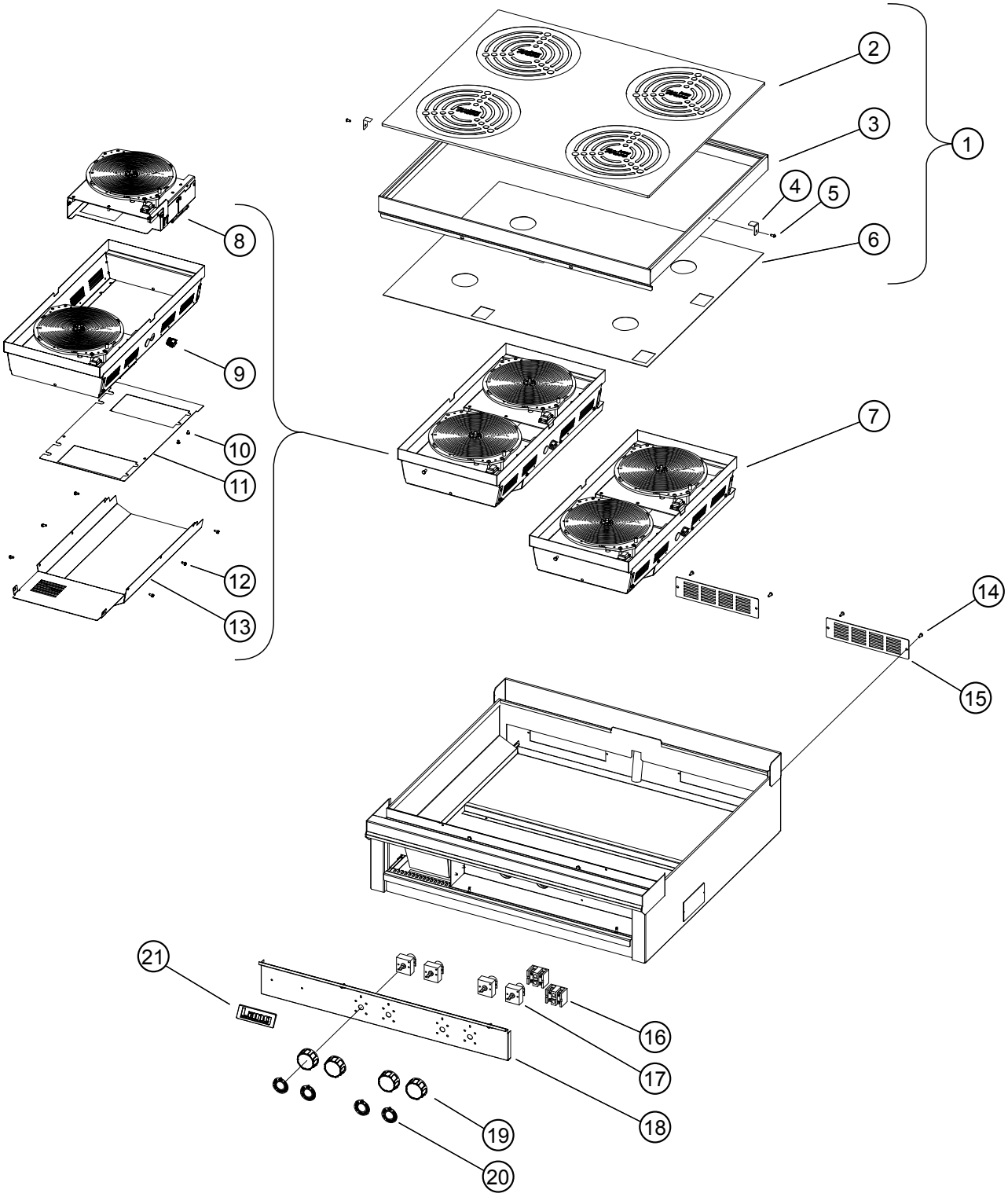

MODEL: RTI30 Induction Rangetop

SK2613 Rev. - 7/23/12

PARTS LIST

July 24, 2012

Model: RTI30 30” Induction Range Top			
Fig No	Part No	Qty	Description
1	P9-CR30-621	1	TOP GLASS ASSY-30” INDUCTION
2	PS-71300-21	1	GLASS-INDUCT 30” REPLACMENT
3	P9-CR30-623	1	TOP GLASS ASSY WELD-30”
4	P9-RF21-783	2	CLIP - GLASS INDUCTION
5	2C-20102-08	2	SCRW PHD ST 8-32X.375
6	P9-CR30-622	1	INSUL-MANNIGLAS 30”INDUCT
7	P9-RF21-727	2	INDUCTION MODULE ASSY
8	2N-11120-26	4	INDUCT MOD-2600W 208/240
9	2E-31200-01	2	BOX CONNECTOR 3/8
10	2C-1492	16	SCREW 8-32X1/4 RHP STL NP
12	2C-20102-03	20	SCRW HXHD ST 8-32X3/8 SLT
13	P9-RF21-731	2	BOTTOM COVER-INDUCTION
13	P9-RF21-732	2	INDUCTION LOWER DUCT
14	2C-20102-04	4	SCRW PHD ST 8-32X.5 PLTD
15	P9-RF21-723	2	REAR VENT COVER - INDUCT
16	2E-30500-08	2	TRM BLOCK 2 POLE SMALL 95
17	2E-30304-14	4	CONTROL MODULE-INDUCTION
18	P9-CR30-616	1	CONTROL FRONT - 30”INDUCT
19	2R-70700-09	4	KNOB BLNK UNIVERSAL RED
20	2R-70702-03	4	DIAL PLT CSU HI-LOW 480V
21	K9-60301-43-1	1	DIE CAST LOG + TINNERMAN
NI	2M-61127-11	AR	WD RT30 W/EHS-AP 208/240V
NI	6B-71000-07	AR	SILICNE CLR SEALNT 10.1OZ

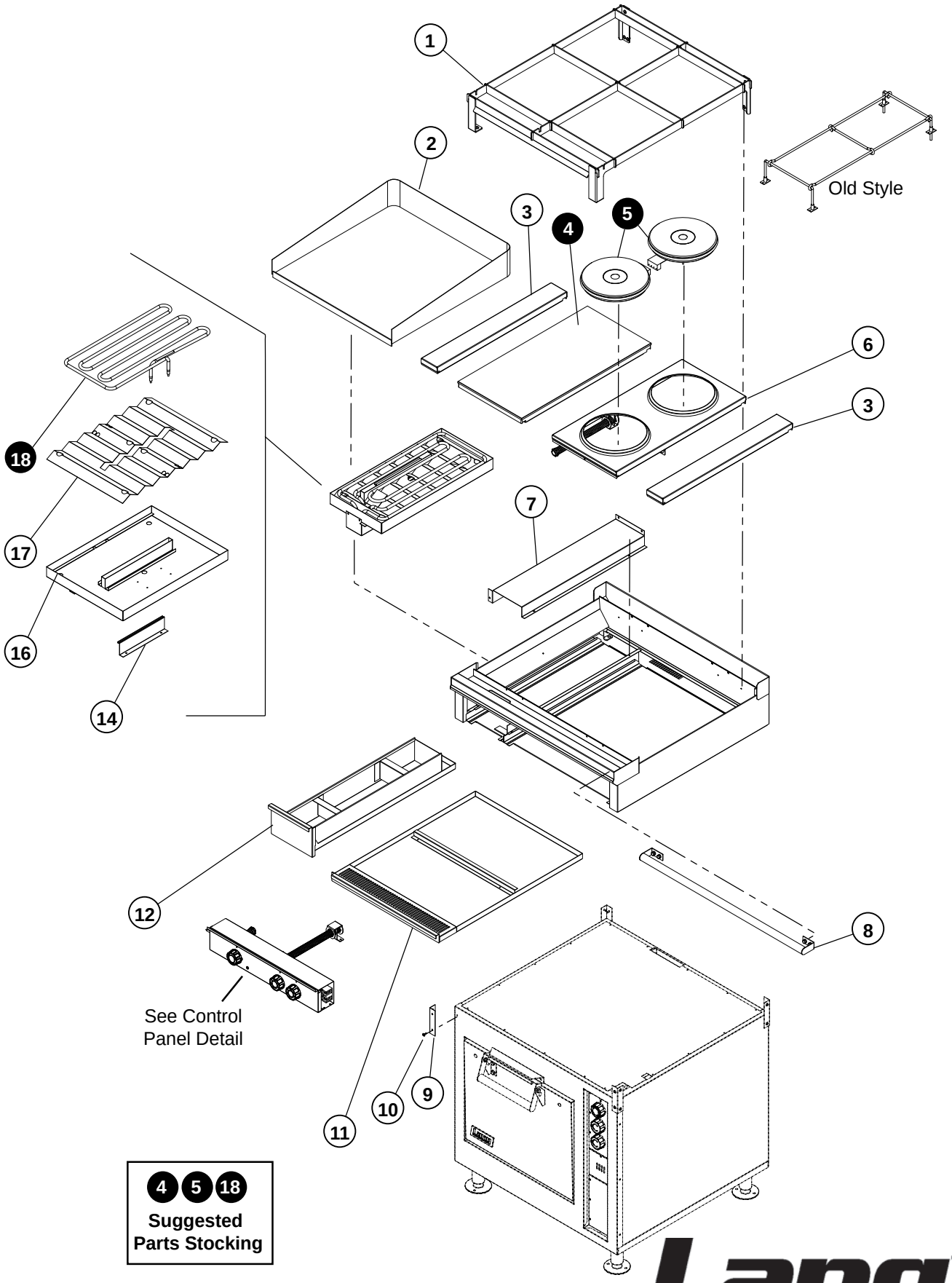

Model:
R30S-Marine Range Top Assy

SK2355 Rev. - 3/6/07

PARTS LIST

October 4, 2012 Rev -

Model No: R30S-ATA, R30S-ATB, R30S-ATC, R30S-ATD, R30S-ATE, R30S-ATF, Marine 30” Electric Range Top Assy				
Fig No	Part No.	Qty	Description	Application
1	P9-50302-302	1	SEARAIL ASSY 2’ RT30	ATA, ATB, ATC
	P9-50302-304		SEARAIL ASSY 1’ RT30	ATD, ATE
2	P9-50401-15-3	1	RANGE PLTE ASY 18 SHORT	ATD, ATE
	P9-50401-17-1		RANGE PLT MOD 1/2 X 30	ATF
3	N9-32-332	2	3 INCH SPREADER-PLATE	ATA, ATB, ATC
4	PS-11010-341	1	KIT, HOTPLATE 208V 500W	ATB208V, ATE208V
		2		ATC-208V
	PS-11010-351	1	KIT, HOTPLATE 240V 5000W	ATB240V, ATE240V
		2		ATC-240V
	PS-11010-361	1	KIT, HOTPLATE 480V 500W	ATB440/480V, ATE440/480V
		2		ATC-440/480V
5	2N-11120-12	2	ELMNT TK 208V 2600W	ATB208V, ATD240V
		4		ATA-208V
	2N-11120-13	2	ELMNT TK 240V 2600W	ATB-240V, ATD-240V
		4		ATA-240V
	2N-11120-14	2	ELMNT TK 480V 2600W	ATB-440/480V
		4		ATA-440/480V
	2N-11120-18	4	ELMNT TK 380V 2000W	ATA-380V
6	P9-50300-82-2	1	EGOPLTE FRMEASY PHANT 32/	ATB
		2		ATA
7	P9-CR30-258	1	DRAWER COVER	ALL
8	P9-50302-20	1	GRAB BAR ASSY/CR30-M	ALL
	2C-20111-01	4	SCRW HXHD CAP 1/4-20X1/2	GRAB BAR MOUNTING HRD
	2C-20204-02		WASHER SS 1/4 SPLIT LOCK	GRAB BAR MOUNTING HRD
	2C-20303-01		NUT HX SS 1/4-20	GRAB BAR MOUNTING HRD
9	N9-32-326	4	BODY WRAP ANGLE - 2 PIECE	ALL
10	2C-20115-06	8	SCRW S/S 8-32X1/2 T/H S/T	ALL
11	P9-CR30-280	1	LARGE DRAWER ASSY	ALL
12	P9-CR30-260	1	SPOT SMALL DRAWER	ALL
14	K9-XL-504	1	STAT HOLDER	ATD, ATE
14	K9-XL-504	4	STAT HOLDER	ATF
16	P9-CR30-320	1	ELMNT PAN ASSY 18”	ATD, ATE
	P9-CR30-329	4	ELMNT PAN ASSY 30	ATF
17	P9-CR30-325	1	ELMNT PAN Z 18” GRIDDLE	ATD, ATE
	P9-CR30-327	4	ELMNT PAN Z 30” GRIDDLE	ATF
18	2N-11030-45	1	ELMNT GRID 18” RANGE 208V	ATD208V, ATE208V
	2N-11030-46	1	ELMNT GRID 18” RANGE 240V	ATD240V, ATE240V
	2N-11030-47	1	ELMNT GRID 18” RANGE 480V	ATD440/480V, ATE440/480V
NI	2H-CR30-326	1	ELMNT PAN INSULATION 18 GRIDDLE	ATD, ATE
NI	2H-CR30-328	2	ELMNT PAN INSULATION 30 GRIDDLE	ATF

Lang®

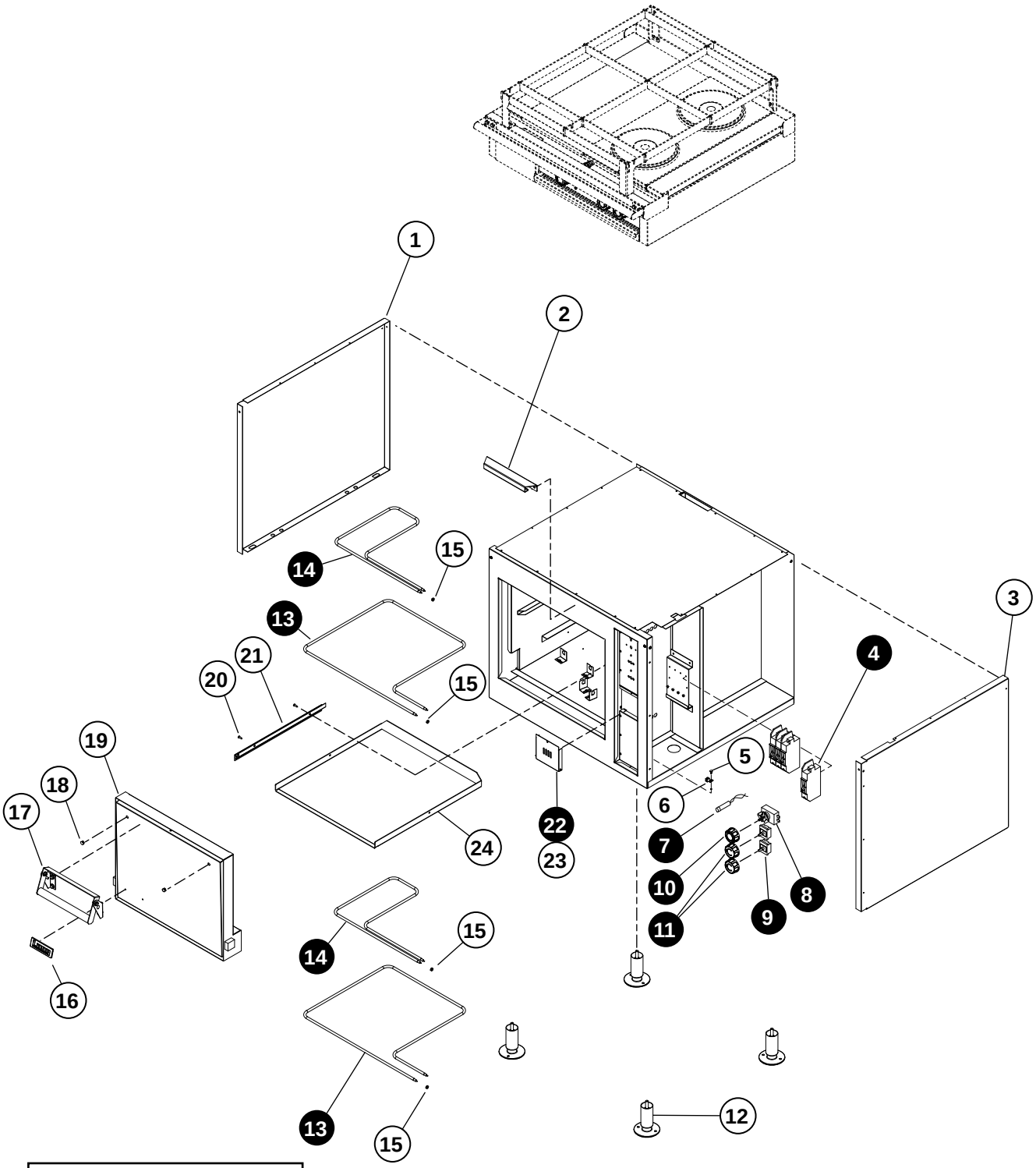

4 7 8 9 10
11 13 14 22
Suggested Parts Stocking

Model:
R30S-Marine Range Oven Assy

Lang®

SK2356 Rev. - 3/6/07

PARTS LIST

October 4, 2012 Rev -

Model No: R30S-ATA, R30S-ATB, R30S-ATC, R30S-ATD, R30S-ATE, R30S-ATF, Marine 30” Electric Range Oven Assy				
Fig No	Part No	Qty	Description	Application
1	N9-32-143	1	BODY SIDE LOWER L/H - 2	ALL
2	Y9-50300-14	1	MARINE HANDLE CHANNEL	ALL
	2C-20101-10	2	SCREW THD MS 1/4-20X2 1/4 PL	MARINE HANDEL MOUNTING
	2C-20204-02		WASHER SS 1/4 SPLIT LOCK	MARINE HANDEL MOUNTING
	2C-20301-29		NUT HEX ACORN 1/4-20 SS	MARINE HANDEL MOUNTING
3	N9-32-142	1	BODY SIDE LOWER R/H - 2	ALL
4	2E-31601-02	1	CB 480V 50A 3 POLE	380V
	2E-31800-01	4	CB 250V50A 1 POLE CRLNGSW	208,240V
	2E-31800-04	1	CB 480V 50A 3 POLE	440V, 480V
5	2E-31200-02	1	LUG GROUNDING UL APPROVED	ALL
6	Y9-31200-02-1	1	GROUNDING LUG/+LABEL	ALL
7	2J-31601-01	1	PILOT LT 250V 6LEAD BLK	208/240V
	2J-31601-02	1	PILOT LT 480V 6LEAD BLK	380V, 440V, 480V
8	2T-30402-08	1	STAT ADJ 450o 72 C/T	ALL
9	2E-30304-35	2	SWTROT3HT 240/480VAC20AMP	ALL
10	Y9-70701-16	1	KNOB ASSY 450°F, BLACK	
	Y9-70701-16-2	1	KNOB ASSY 450°F, RED	
11	Y9-70701-10	2	KNOB 3-HEAT 208-240V, BLACK	
	Y9-70701-10-2		KNOB 3-HEAT 208-240V, RED	
12	2A-72500-05	4	LEG 4 W/BOLT DOWN ADJ	ALL
13	2N-11040-02	2	ELE 32OVN 208/240V OS 1KW	208/240V
	2N-11040-08		ELMNT 32OVEN 480V O/S 1KW	440V, 480V
	2N-11040-18		ELMNT 32OVEN 380V O/S 1KW	380V
14	2N-11040-01	2	ELE 32OVN 208/240V IS 1KW	208/240V
	2N-11040-07		ELMNT 32OVEN 480V I/S 1KW	440V, 480V
	2N-11040-17		ELMNT 32OVEN 380V I/S 1KW	380V
15	2C-20301-15	8	NUT HEX 10-32 PLTD	ALL
16	K9-60301-43-1	1	DIE CAST LOG + TINNERMAN	ALL
17	Y9-50300-11	1	MARINE HANDLE	ALL
18	2P-70903-01	4	PLG BTN PLTD MTL 3/8	ALL
19	N9-32-229	1	DOOR ASSEMBLY WITH A/L IS	ALL
20	2C-20102-04	4	SCRW PHD ST 8-32X.5 PLTD	ALL
21	N9-LA36-109-1	1	CAPILLARY SHIELD	ALL
22	N9-32-131	1	SWITCH DOOR ASSY	ALL
23	2A-32-124	1	SWITCH DOOR HINGE ROD	ALL
24	N9-32-437	1	OVEN DECK WELD	ALL

Lang®

	Part No.	Qty	Description
	50302-304-1	**SEARAIL ASSY 1’ RT30 SK**	
A	50302-307	1	SEARAIL LH SIDE RT30
B	50302-308	1	SEARAIL RH SIDE RT30
C	50302-317	5	SEARAIL SIDE TO SIDE 12”
	20109-04	6	SCREW THD MS SS 10-32X 3/8

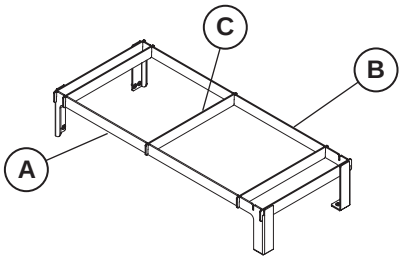

	Part No.	Qty	Description
	50302-302-1	**SEARAIL ASSY 2’ RT30/32 SK**	
A	50302-307	1	SEARAIL LH SIDE RT30
B	50302-308	1	SEARAIL RH SIDE RT30
C	50302-317	6	SEARAIL SIDE TO SIDE 12”
D	50302-316	1	SEARAIL FR TO BK RT30
E	50302-311	2	SEARAIL FR & RR 2’
	20109-04	6	SCREW THD MS SS 10-32X 3/8
	20301-34	2	NUT HEX ACORN 10-32 S/S

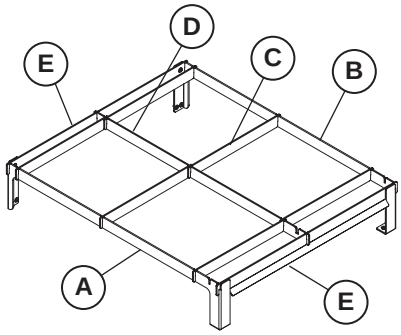

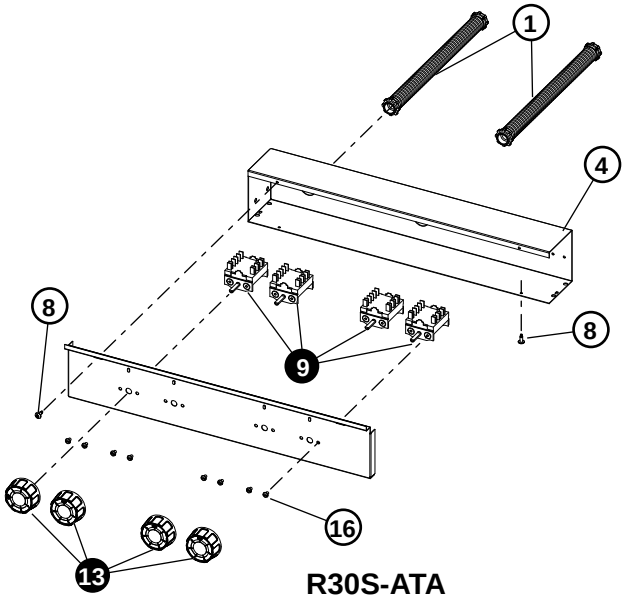

R30S-ATA

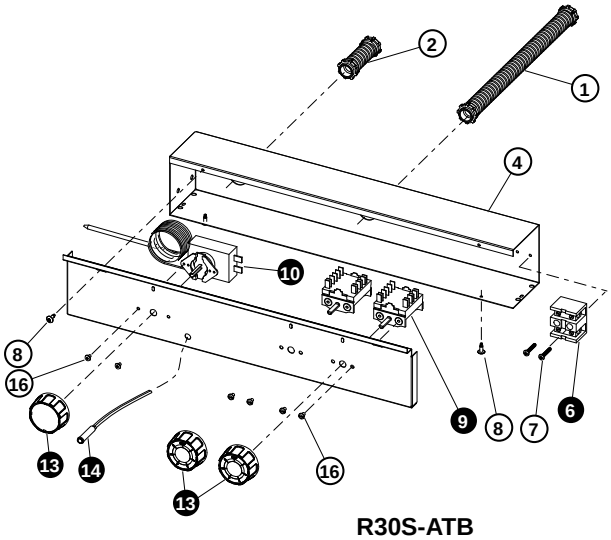

R30S-ATB

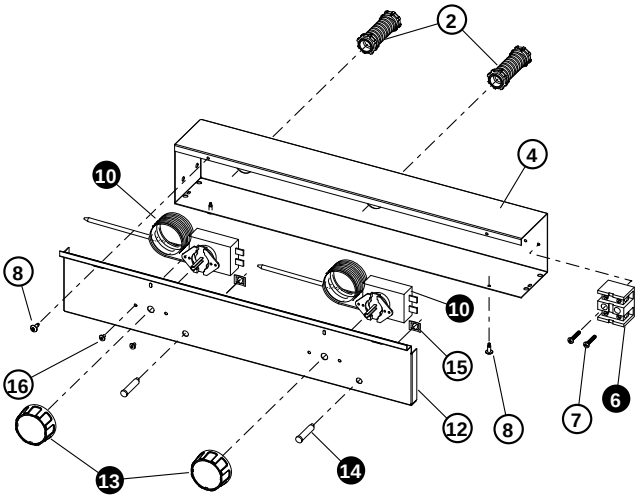

R30S-ATC

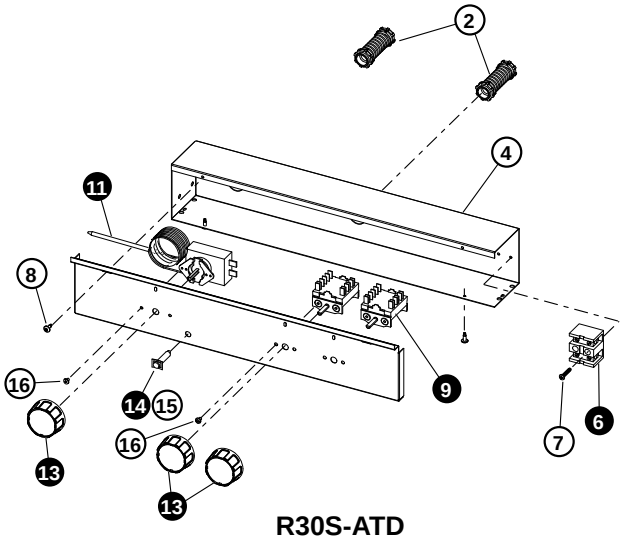

R30S-ATD

Suggested Parts Stocking

6 10 11 13 14

Model:
R30S Marine Range Top Controls

SK2357 Rev. - 3/7/08

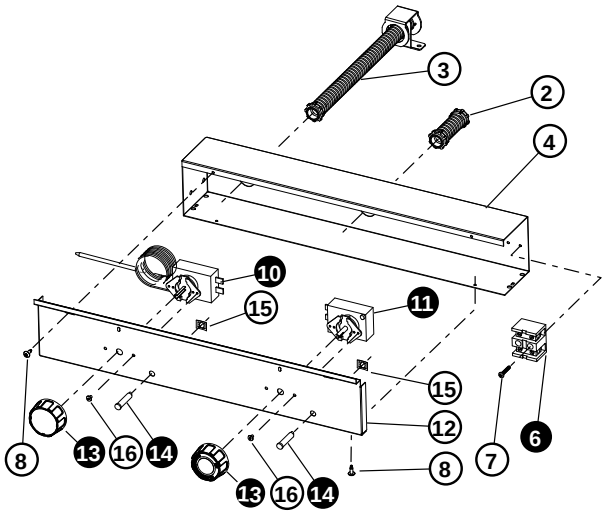

R30S-ATE

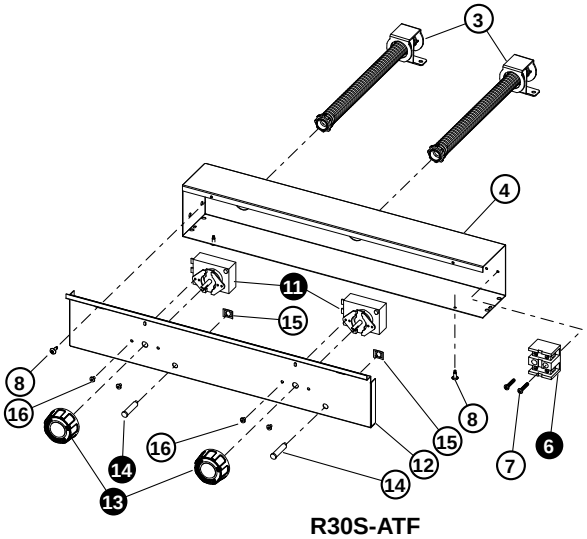

R30S-ATF

Suggested Parts Stocking

6 10 11 13 14

Model:
R30S Marine Range Top Controls

Lang®

SK2358 Rev. - 3/7/08

PARTS LIST

October 4, 2012 Rev -

Model No: R30S-ATA, -ATB, -ATC, -ATD, -ATE, -ATF, Marine 30” Range Control Top Panel Assy				
Fig No	Part No	Qty	Description	Application
1	P9-CR30-750	1	CONDUIT ASSY - SPEED UNIT	ATB, ATE
	P9-CR30-750	2	CONDUIT ASSY - SPEED UNIT	ATA
2	P9-CR30-752	1	CONDUIT ASSY - HOT TOP	ATB, ATE
	P9-CR30-752	2	CONDUIT ASSY - HOT TOP	ATC, ATD
3	P9-CR30-751	1	CONDUIT ASSY - GRIDDLE	ATE
	P9-CR30-751	2	CONDUIT ASSY - GRIDDLE	ATF
4	P9-CR30-222	1	CONTROL BACK	ATA, ATB, ATC, ATD, ATE, ATF
6	2E-30500-08	1	TRM BLOCK 2 POLE SMALL 95	ATB, ATC-480VM ATD, ATE, ATF
7	2C-20103-07	2	SCRW PHD SM 8X1 PHL TYP A	ATB, ATC, ATD, ATE, ATF, RT30G
8	2C-20115-06	4	SCRW S/S 8-32X1/2 T/H S/T	ATA, ATB, ATC, ATD, ATE, ATF
9	2E-30304-09	2	SWTROT 6 HEAT+OFF208/240V	ATB, ATD, RT30G
	2E-30304-09	4	SWTROT 6 HEAT+OFF208/240V	ATA
10	2T-30402-23	1	STAT ADJ 850o 48C/T NAK	ATB, ATE
	2T-30402-23	2	STAT ADJ 850o 48C/T NAK	ATC
11	2T-30402-08	1	STAT ADJ 450o 72 C/T	ATD, ATE
	2T-30402-08	2	STAT ADJ 450o 72 C/T	ATF
12	P9-CR30-311	1	CONTROL FRONT SS	ATA
	P9-CR30-312	1	CONTROL FRONT HS & GS	ATB, ATD
	P9-CR30-313	1	CONTROL FRONT HH	ATC, ATE, ATF
13	P9-70701-38	1	KNOB 850o D, BLACK	ATB, ATE
		2		ATC
	P9-70701-38-2	1	KNOB 850o D, RED	ATB, ATE
		2		ATC
	P9-70701-41	2	KNOB 6 HEAT EGOTK, BLACK	ATB, ATD
		4		ATA
	P9-70701-41-2	2	KNOB 6 HEAT EGOTK, RED	ATB, ATD
		4		ATA
	Y9-70701-19	1	KNOB 450o D, BLACK	ATD, ATE
		2		ATF
	Y9-70701-19-2	1	KNOB 450o D, RED	ATD, ATE
		2		ATF
14	2J-31601-01	1	PILOT LT 250V 6LEAD BLK	ATD-208V
	2J-31601-01	2	PILOT LT 250V 6LEAD BLK	ATC-208V, ATE-208M, ATF-208/240M
	2J-31601-02	1	PILOT LT 480V 6LEAD BLK	ATB-480M, ATD-440/480M
	2J-31601-02	2	PILOT LT 480V 6LEAD BLK	ATC-480M, ATF-440/480M
15	2C-20602-03	1	TINNERMAN 3SCLIP 5/16	ATB-480M, ATD-208M
	2C-20602-03	2	TINNERMAN 3SCLIP 5/16	ATC
16	2C-20101-64	4	SCRW PHD MS M4 X 6 PLTD	ATB, ATD
	2C-20101-64	8	SCRW PHD MS M4 X 6 PLTD	ATA
	2C-20109-09	2	SCRW THD MS SS 6-32X1/4	ATB, ATD
	2C-20109-09	4	SCRW THD MS SS 6-32X1/4	ATE
	2C-20109-09	4	SCRW THD MS SS 6-32X1/4	ATC, ATF

Lang®