Operator's Manual

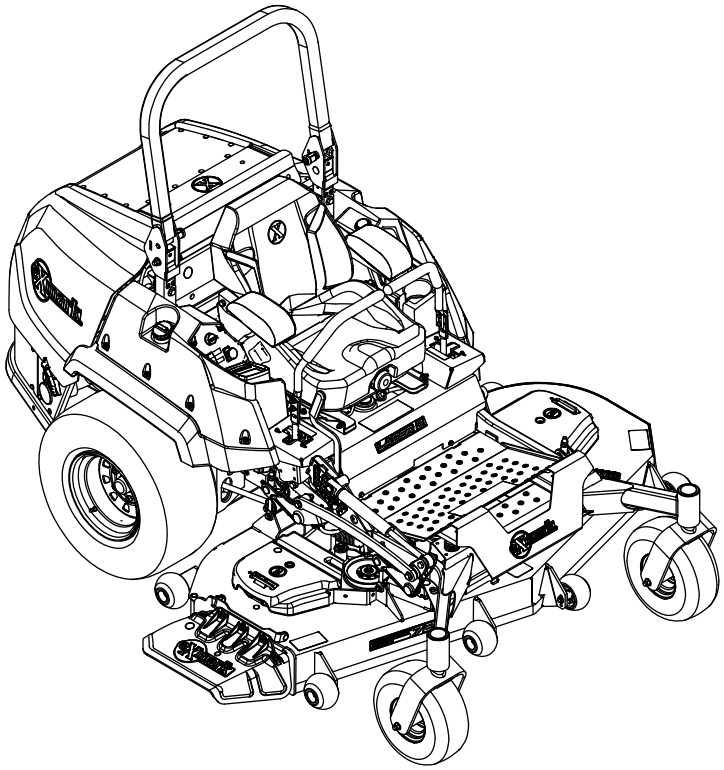

LAZER Z®
DIESEL

For Serial Nos.
417,930,746 & Higher
Part No. 4507-400 Rev. B

⚠ WARNING

CALIFORNIA
Proposition 65 Warning

Diesel engine exhaust and some of its constituents are known to the State of California to cause cancer, birth defects, and other reproductive harm.

Battery posts, terminals, and related accessories contain lead and lead compounds, chemicals known to the State of California to cause cancer and reproductive harm. Wash hands after handling.

Use of this product may cause exposure to chemicals known to the State of California to cause cancer, birth defects, or other reproductive harm.

Important: It is a violation of California Public Resource Code Section 4442 or 4443 to use or operate the engine on any forest-covered, brush-covered, or grass-covered land unless the engine is equipped with a spark arrester, as defined in Section 4442, maintained in effective working order or the engine is constructed, equipped, and maintained for the prevention of fire.

To acquire a spark arrester for your unit, see your Engine Service Dealer.

For all models that do not have Exmark engines, please refer to the engine manufacturer's information included with the machine.

For models with Exmark engines, refer to this manual for information.

The gross or net horsepower (or torque) of this engine was laboratory rated by the engine manufacturer in accordance with the Society of Automotive Engineers (SAE) J1940 or J2723. As configured to meet safety, emission, and operating requirements, the actual engine horsepower (or torque) on this class of mower will be significantly lower.

©2024 Exmark Mfg. Co., Inc.
415 Industrial Row
Beatrice, NE 68310

Contact us at www.Exmark.com.
Printed in the USA
All Rights Reserved

Introduction

CONGRATULATIONS on the purchase of your Exmark Mower. This product has been carefully designed and manufactured to give you a maximum amount of dependability and years of trouble-free operation.

This rotary-blade, riding lawnmower is intended to be used by professional, hired operators. It is designed primarily for cutting grass on well-maintained lawns on residential or commercial properties. Using this product for purposes other than its intended use could prove dangerous to you and bystanders.

This manual contains operating, maintenance, adjustment, and safety instructions for your Exmark mower.

BEFORE OPERATING YOUR MOWER, CAREFULLY READ THIS MANUAL IN ITS ENTIRETY.

By following the operating, maintenance, and safety instructions, you will prolong the life of your mower, maintain its maximum efficiency, and promote safe operation.

To maximize safety, performance, and proper operation of this machine, it is essential that all operators carefully read and fully understand the contents of the Operator's manual provided with the product. Failure to comply with the operating instructions or receive proper training may result in injury. Go to https://www.Exmark.com for additional safe operation information, such as safety tips, training materials, and Operator's manuals.

If additional information is needed, or should you require trained mechanic service, contact your authorized Exmark equipment dealer or distributor.

All Exmark equipment dealers and distributors are kept informed of the latest methods of servicing and are equipped to provide prompt and efficient service in the field or at their service stations. They carry ample stock of service parts or can secure them promptly for you from the factory.

All Exmark parts are thoroughly tested and inspected before leaving the factory, however, attention is required on your part if you are to obtain the fullest measure of satisfaction and performance.

Whenever you need service, genuine Exmark parts, or additional information, contact an Authorized Service Dealer or Exmark Customer Service and have the model and serial numbers of your product ready.

Figure 1 identifies the location of the model and serial numbers on the product. Write the numbers in the space provided.

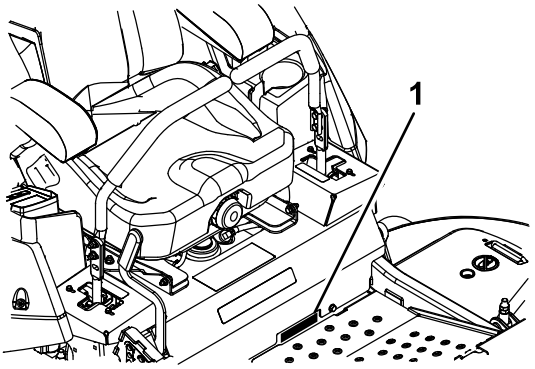

Figure 1

1. Model and serial number location

Model No. _____

Serial No. _____

For complete warranty details, see https://www.Exmark.com. You may also call us 402-223-6375 to request a written copy of the product's warranty.

Contents

Introduction 3
Safety 5
Safety Alert Symbol 5
General Safety 5
Safety and Instructional Decals 6
Specifications 18
Systems 18
Dimensions 20
Torque Requirements 22
Product Overview 22
Operation 24
Controls 24
Before Operation 30
Operating Instructions 31
During Operation Safety 31
After Operation 42
Transporting 42
Maintenance 45
Maintenance Safety 45
Recommended Maintenance Schedule(s) 46
Periodic Maintenance 47
Engine Maintenance 47
Engine Safety 47
Check Engine Oil Level 47
Check Battery Charge 47
Check Mower Blades 49
Check Safety Interlock System 51
Check Rollover Protections Systems (Roll Bar) Knobs 59
Check Wing Deck Bushings 59
Check Seat Belt 61
Check for Loose Hardware 61
Service Air Cleaner 61
Check Deck Gearbox Oil 61
Check Drive Wheel Gearbox Oil– (144 Inch Deck Models Only) 62
Check Hydraulic Fluid Level 62
Check Tire Pressures 63
Check Condition Of Belts 63
Lubricate Grease Fittings 63
Check Wheel Lug Nuts 65
Drain Fuel Filter/Water Separator 65
Change Fuel Filter/Water Separator 66
Change Deck Gearbox Oil 67
Change Engine Oil and Filter 67
Change Drive Wheel Gearbox Oil–144 Inch Deck Models Only 68
Change Hydraulic System Filter and Fluid 68
Check Engine Coolant Level 71
Change Engine Coolant 71
Thread Locking Adhesives 72
Mobil HTS Grease (Or Food-Grade Anti-seize) 72
Copper-Based Anti-seize 72
Dielectric Grease 72
Adjustments 73
Deck Leveling–60 and 72 Inch Models 73
Deck Leveling–96 and 144 Inch Models 75
Deck Belt Tension 77
Parking Brake Adjustment for All Except 144 Inch Deck Models 78
Motion Control Linkage Adjustment 79
Motion Control Damper Adjustment 80
Caster Pivot Bearings Pre-Load Adjustment 80
Cleaning 81
Cleaning and Storing Safety 81
Clean Engine and Exhaust System Area 81
Clean the Radiator 81
Clean Debris From Machine 81
Clean Hood Screen on Machine 81
Clean Grass Build-Up Under Deck 82
Inspect Engine Valve Clearance 82
Waste Disposal 82
Troubleshooting 83
Schematics 85
California Proposition 65 Warning Information 93

Safety

Safety Alert Symbol

This Safety Alert Symbol (Figure 2) is used both in this manual and on the machine to identify important safety messages which must be followed to avoid accidents.

This symbol means: **ATTENTION! BECOME ALERT! YOUR SAFETY IS INVOLVED!**



g000502

Figure 2
Safety Alert Symbol

The safety alert symbol appears above information which alerts you to unsafe actions or situations and will be followed by the word **DANGER**, **WARNING**, or **CAUTION**.

DANGER: Indicates an imminently hazardous situation which, if not avoided, **Will** result in death or serious injury.

WARNING: Indicates a potentially hazardous situation which, if not avoided, **Could** result in death or serious injury.

CAUTION: Indicates a potentially hazardous situation which, if not avoided, **May** result in minor or moderate injury.

This manual uses two other words to highlight information. **Important** calls attention to special mechanical information and **Note** emphasizes general information worthy of special attention.

General Safety

This machine is capable of amputating hands and feet and of throwing objects. Always follow all safety instructions to avoid serious personal injury or death.

- Read, understand, and follow all instructions and warnings in the Operator's Manual and on the machine, engine, and attachments. All operators and mechanics should be trained. If the operator(s) or mechanic(s) can not read this manual, it is the owner's responsibility to explain this material to them; other languages may be available on our website.
- Only allow trained, responsible, and physically capable operators that are familiar with the safe operation, operator controls, and safety signs and instructions to operate the machine. Never let children or untrained people operate or service the equipment. Local regulations may restrict the age of the operator.
- Always keep the roll bar in the fully raised and locked position and use the seat belt.
- Do Not operate the machine near drop-offs, ditches, embankments, water, or other hazards, or on slopes greater than 15 degrees.
- Keep bystanders and children out of the operating area.
- Do Not put your hands or feet near moving parts.
- Do Not operate the machine without all safety shields, guards, switches, and other devices in place and in proper working condition.
- Park machine on level ground, disengage drives, set parking brake, stop engine, and remove key. Wait for all moving parts to stop before leaving the operator's position. Allow the machine to cool before servicing, adjusting, fueling, cleaning, or storing.

Safety and Instructional Decals

- Keep all safety signs legible. Remove all grease, dirt and debris from safety signs and instructional labels.
- Replace all worn, damaged, or missing safety signs.
- When replacement components are installed, be sure that current safety signs are affixed to the replaced components.
- If an attachment or accessory has been installed, make sure current safety signs are visible.
- New safety signs may be obtained from your authorized Exmark equipment dealer or distributor or from Exmark Mfg. Co. Inc.
- Safety signs may be affixed by peeling off the backing to expose the adhesive surface. Apply only to a clean, dry surface. Smooth to remove any air bubbles.
- Familiarize yourself with the following safety signs and instruction labels. They are critical to the safe operation of your Exmark commercial mower.



decal93-6687

93-6687

Wing Deck Models Only

1. Do not step here.

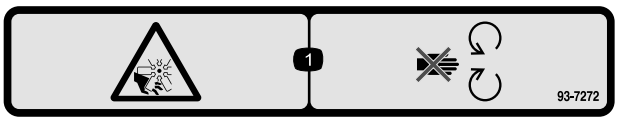

decal93-7272

93-7272

1. Cutting/dismemberment hazard; fan—stay away from moving parts.

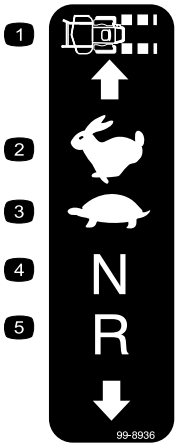

decal99-8936

99-8936

All Models Except 144 Inch Decks

1. Machine speed
2. Fast
3. Slow
4. Neutral
5. Reverse



decal106-5517

106-5517

1. Warning—do not touch the hot surface.

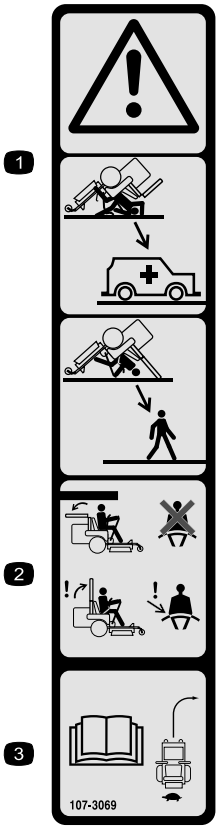

decal107-3069

107-3069

1. Warning-there is no rollover protection when the roll bar is down.
2. To avoid injury or death from a rollover accident, keep the roll bar in the fully raised and locked position and wear the seat belt. Lower the roll bar only when absolutely necessary; do not wear the seat belt when the roll bar is down.
3. Read the Operator's manual; drive slowly and carefully.

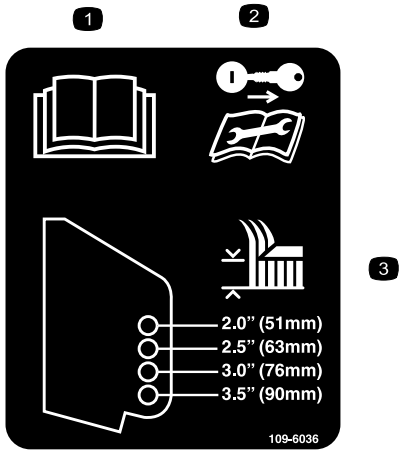

decal109-6036

109-6036

1. Read the Operator's manual
2. Remove the ignition key and read the instructions before servicing or performing maintenance.
3. Height of cut

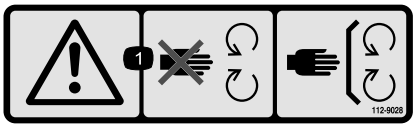

decal112-9028

112-9028

1. Warning—stay away from moving parts; keep all guards in place.

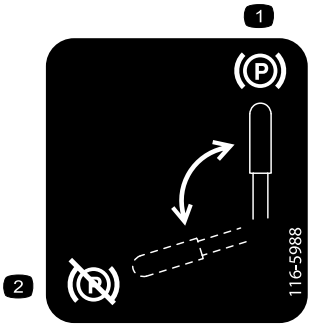

decal116-5988

116-5988

1. Parking brake—engaged
2. Parking brake—disengaged

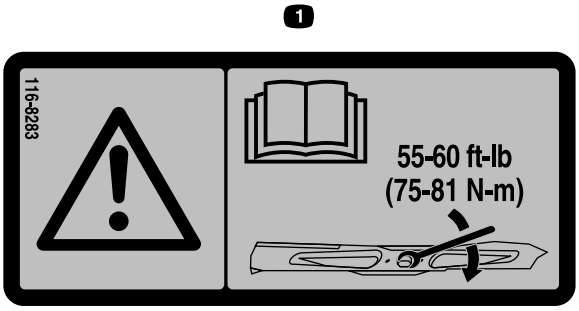

decal116-8283

116-8283

1. Warning—read the Operator's Manual for instructions on torquing the blade bolt/nut to 55-60 ft-lb (75-81 N-m).



decal117-3276

117-3276

1. Engine coolant under pressure
2. Explosion hazard—read the *Operator's Manual*.
3. Warning—do not touch the hot surface.
4. Warning—read the *Operator's Manual*.

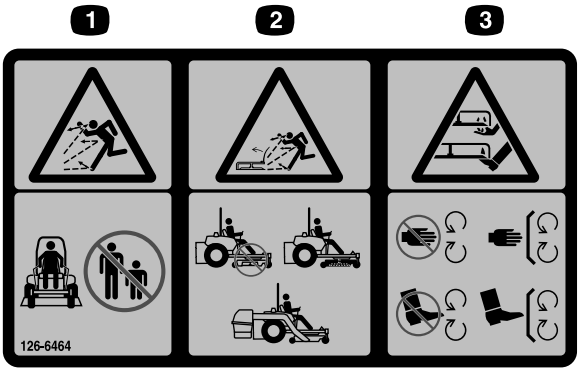

decal126-6464

126-6464

Side Discharge Models

1. Thrown object hazard—keep bystanders away.
2. Thrown object hazard, mower—do not operate without the deflector, discharge cover, or grass collection system in place.
3. Cutting/dismemberment of hand or foot—stay away from moving parts; keep all guards and shields in place.

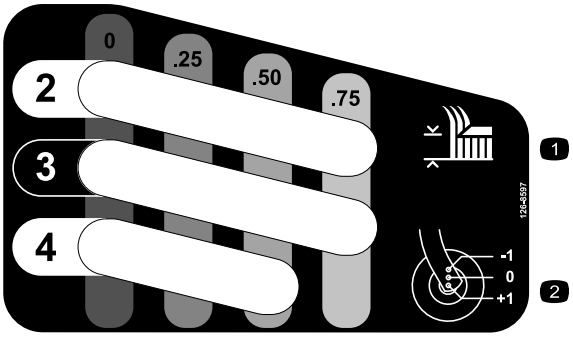

decal126-8597

126-8597

Wing Deck Models Only

1. Height of cut
2. Range adjustment

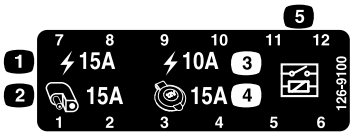

decal126-9100

126-9100

3TNV80FT Models

1. Chassis, 15A
2. Accessory, 15A
3. Main, 10A
4. Power port, 15A
5. Main relay

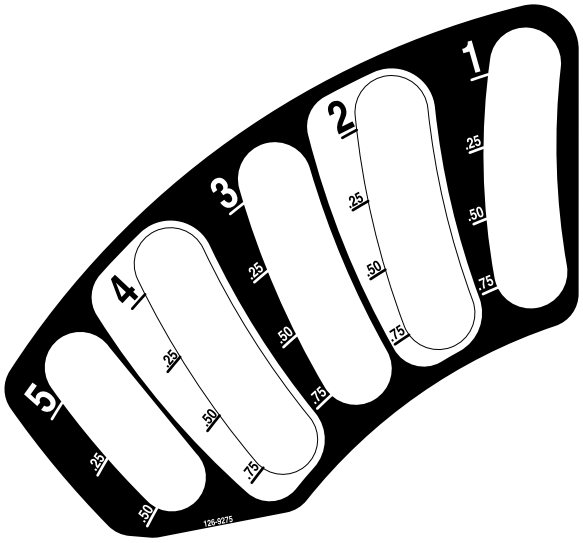

decal126-9275

126-9275

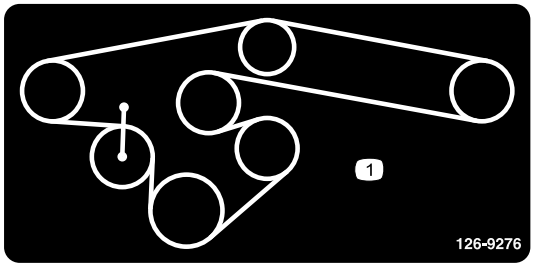

decal126-9276

126-9276

1. Belt routing

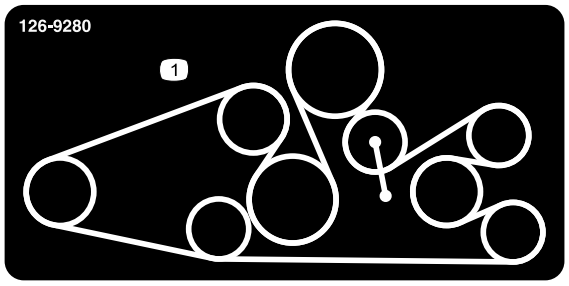

decal126-9280

126-9280

72 Inch Rear Discharge Deck

1. Belt routing

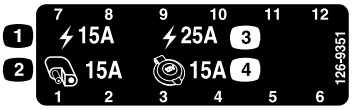

decal126-9351

126-9351

3TNV88C Models

1. Chassis, 15A
2. Accessory, 15A
3. Main, 25A
4. Power port, 15A

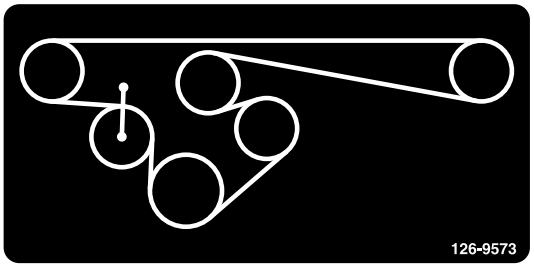

decal126-9573

126-9573

60 Inch Side Discharge Deck



decal133-8062

133-8062

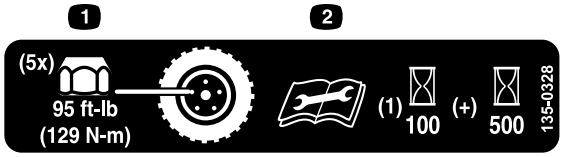

decal135-0328

135-0328

All Models Except 144 Inch Deck Models

1. Wheel lug nut torque 95 ft-lb (129 N-m) (5x)
2. Read and understand the Operator's manual before performing any maintenance, check torque after first 100 hours then every 500 hours thereafter.

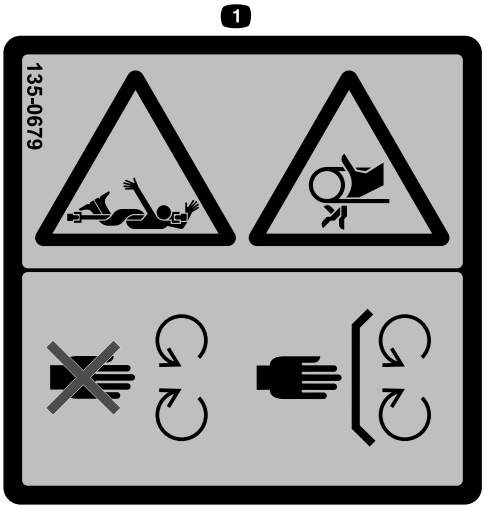

decal135-0679

135-0679

1. Rotating driveline hazard/entanglement hazard; belt—stay away from moving parts; keep all guards and shields in place.



decal135-0664

135-0664

Rear Discharge Models Only

1. Thrown object hazard—keep bystanders away.
2. Cutting/dismemberment of hand and feet—stay away from moving parts; keep all guards and shields in place.

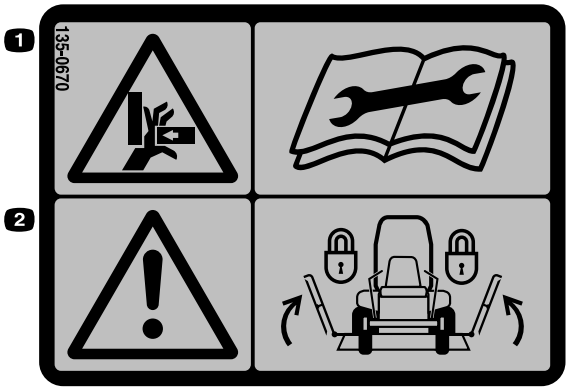

decal135-0670

135-0670

Wing Deck Models Only

1. Crushing hazard, hand - read instructions before servicing or performing maintenance.
2. Warning - Lock the deck wings and read the instructions before servicing or performing maintenance.

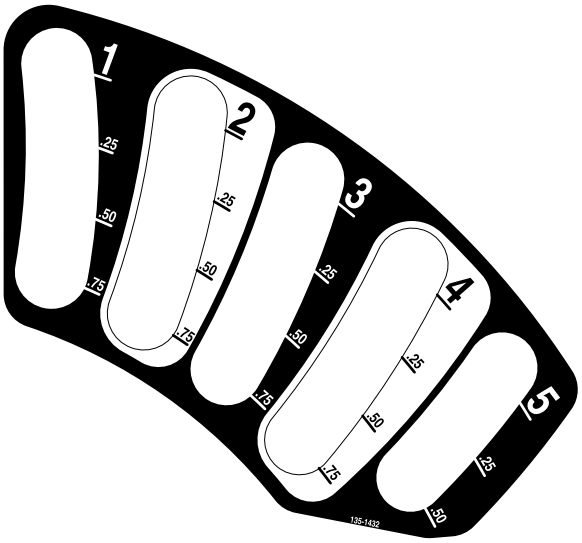

decal135-1432

135-1432



decal135-2838

135-2838

1. Read the Operator's manual for more information. Only use Exmark red-colored wet clutch transmission fluid P/N 135-2834. Do Not use green-colored hydraulic fluid.

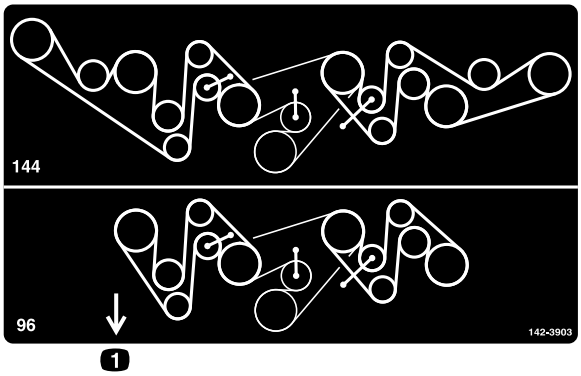

decal142-3903

142-3903

96 and 144 Inch Deck Models

1. Front of the mower deck

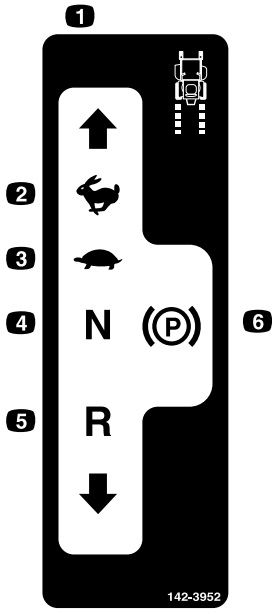

decal142-3952

142-3952

144 Inch Deck Models Only

1. Machine speed
2. Fast
3. Slow
4. Neutral
5. Reverse
6. Parking brake—engaged

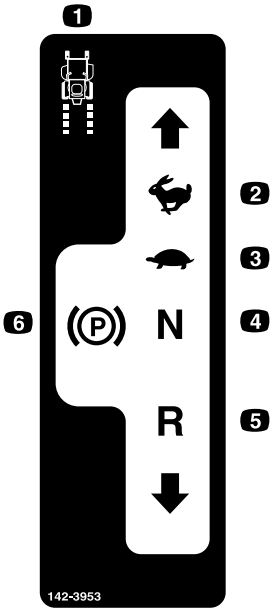

decal142-3953

142-3953

144 Inch Deck Models Only

1. Machine speed
2. Fast
3. Slow
4. Neutral
5. Reverse
6. Parking brake—engaged

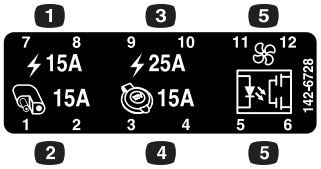

decal142-6728

142-6728

144 Inch Deck Models Only

1. Chassis, 15A
2. Accessory, 15A
3. Main, 25A
4. Power port, 15A
5. Fan, photo relay

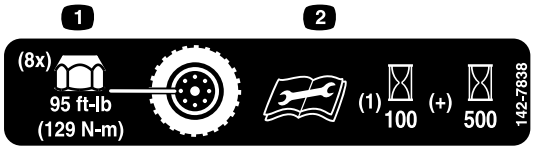

decal142-7838

142-7838

144 Inch Deck Models Only

1. Torque the wheel lug nuts to 95 ft-lb (129 N·m) (8x)
2. Read and understand the *Operator's Manual* before performing any maintenance; check the torque after the first 100 hours, then every 500 hours, thereafter.

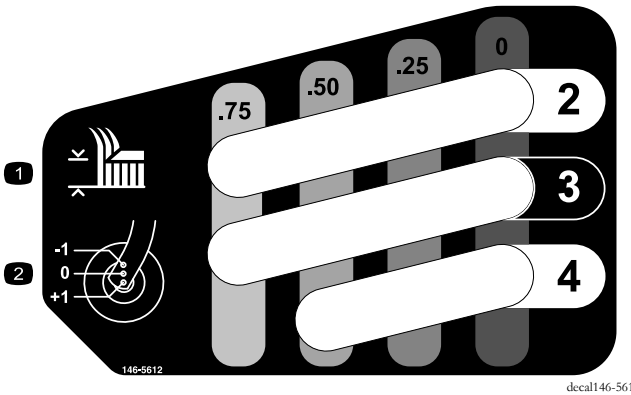

decal146-5612

146-5612

Wing Deck Models Only

1. Height of cut
2. Range adjustment



decalhydro-oilsymbol

Hydraulic Oil Symbol

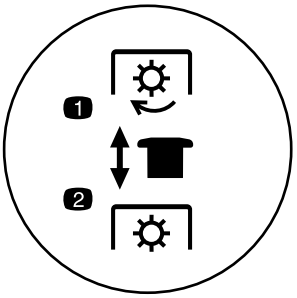

decalptoswitch

PTO Switch Symbols

1. PTO Engaged
2. PTO Disengaged

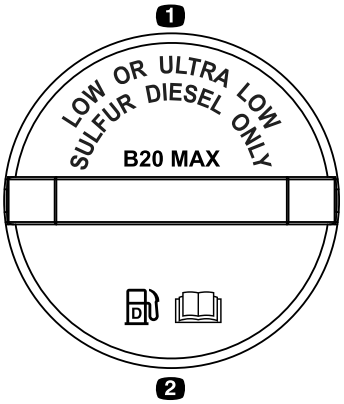

decaldieselloworultra

Fuel Cap

3TNV80FT Engines

1. Low or Ultra Low Sulfur Diesel Only
2. Diesel Only—Read the *Operator's Manual*.

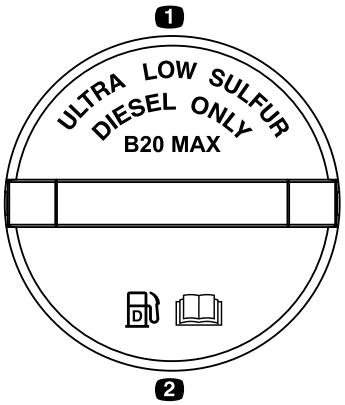

decaldieselultralow

Fuel Cap

3TNV86CT and 3TNV88C Engine

1. Ultra Low Sulfur Diesel Only B20 Max
2. Diesel Only—Read the *Operator's Manual*.

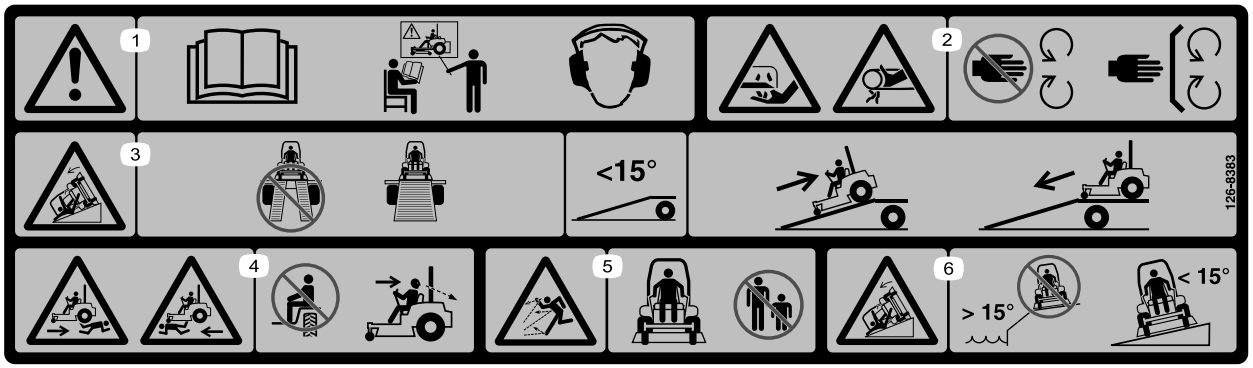

decal126-8383

126-8383

This machine complies with the industry standard stability test in the static lateral and longitudinal tests with the maximum recommended slope indicated on the decal. It is important that each operator review the slope operation instructions in the operator's manual and review the conditions in which the machine is being operated to determine if the machine may be operated in the conditions that day and on that site. Changes to terrain can result in a change in slope operation for any machine.

1. Warning-Read the Operator's Manual. Do Not operate this machine unless you are trained. Wear hearing protection.
2. Cutting and pinching hazard - keep hands and feet away from moving parts; keep all guards and shields in place.
3. Ramp hazard - when loading onto a trailer, do not use dual ramps; only use a singular ramp wide enough for the machine and that has an incline less than 15 degrees; back up the ramp (in reverse) and drive forward off the ramp.
4. Bodily harm hazard - Do Not carry passengers. Look behind you and down when mowing in reverse.
5. Thrown object hazard - keep bystanders away.
6. Tipping hazard on slopes - do not use on slopes near open water; do not use on slopes greater than 15 degrees.

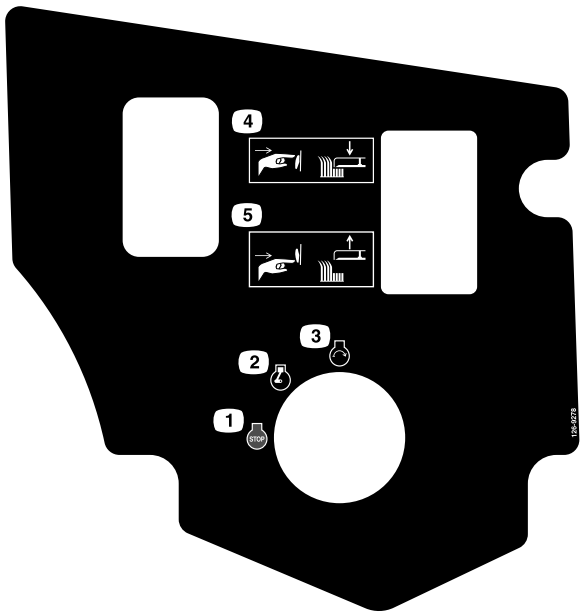

decal126-9278

126-9278

Models with 60 or 72 Inch Decks

1. Engine—Off
2. Engine—On
3. Engine—Start
4. Push the bottom of the button to lower the deck.
5. Push the top of the button to raise the deck.

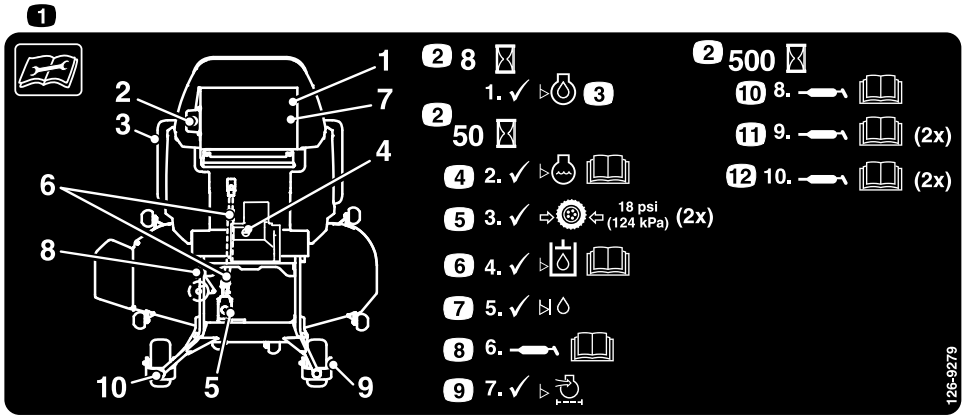

decal126-9279

126-9279

Models with 60 or 72 Inch Deck Models

1. Read the instructions before servicing or performing maintenance
2. Time interval
3. Check engine oil level
4. Check coolant level; refer to the Operator's manual for further instructions
5. Check tire pressure (2 locations)
6. Check hydraulic oil level; refer to the Operator's manual for further instructions
7. Check oil level in gearbox
8. Grease deck drive PTO; refer to the Operator's manual for instructions
9. Check the air cleaner
10. Grease idler pivot; refer to the Operator's manual for further instructions
11. Grease front caster wheel bearings; refer to the Operator's manual for further instructions (2 locations)
12. Grease front caster pivots; refer to the Operator's manual for further instructions (2 locations)

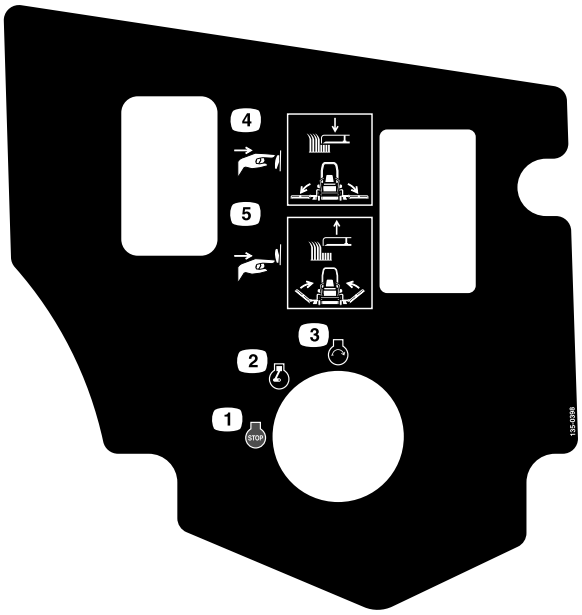

decal135-0398

135-0398

96 Inch Deck Models Only

1. Engine—Off
2. Engine—On
3. Engine—Start
4. Push bottom of button to lower center deck and outer wings
5. Push top of button to raise center deck and fold up outer wings

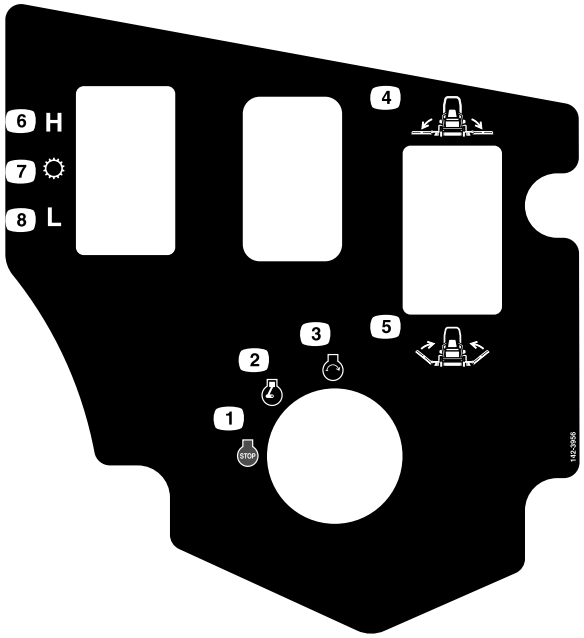

decal142-3956

142-3956

144 Inch Deck Models Only

1. Engine—Off
2. Engine—On
3. Engine—Start
4. Lower the center deck and wings
5. Raise the center deck and wings
6. High range
7. Transmission
8. Low range

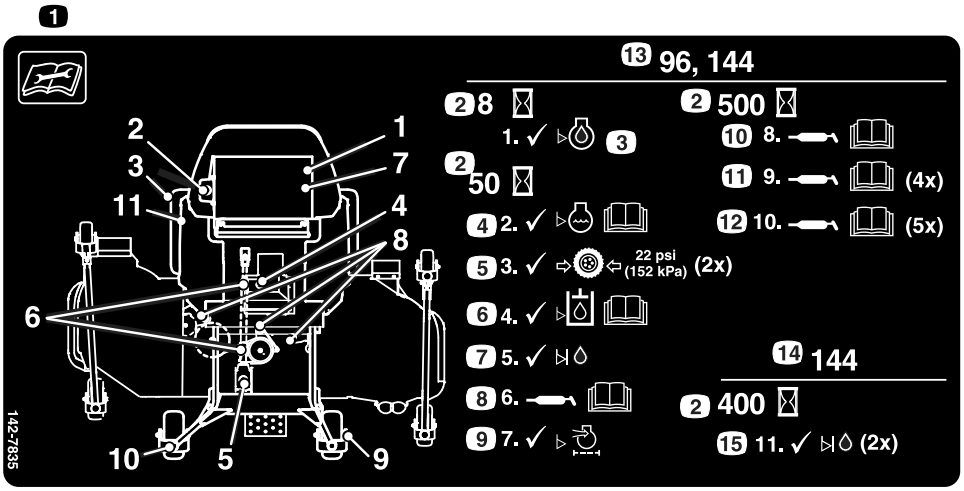

decal142-7835

142-7835

96 and 144 Inch Deck Models Only

1. Read the instructions before servicing or performing maintenance.
2. Time interval
3. Check the engine-oil level.
4. Check the coolant level; refer to the *Operator's Manual* for further instructions.
5. Check the tire pressure (2 locations)
6. Check the hydraulic-fluid level; refer to the *Operator's Manual* for further instructions.
7. Check the oil level in jackshaft.
8. Grease the deck-drive PTO; refer to the *Operator's Manual* for further instructions.
9. Check the air cleaner
10. Grease the idler pivots; refer to the *Operator's Manual* for further instructions (3 locations)
11. Grease the front caster wheel bearings; refer to the *Operator's Manual* for further instructions (4 locations)
12. Grease the front caster pivots; refer to the *Operator's Manual* for further instructions (5 locations)
13. 96 and 144-inch Models
14. 144-inch models only
15. Check the oil level in the wheel drive gearbox (2 locations)

Specifications

Systems

Engine

- Engine Specifications: See your Engine Owner's Manual
- Engine Oil Type: Exmark Premium Engine Oil is recommended.

  If using an alternative, use high-quality, low-ash engine oil that meets or exceeds the following specifications:

  – API service category CJ-4 or higher

  – ACEA service category E6

  – JASO service category DH-2

  Important: Using engine oil other than API CJ-4 or higher, ACEA E6, or JASO DH-2 may cause the diesel particulate filter to plug or cause engine damage.

  Use the following engine oil viscosity grade:

  – SAE 10W-30 or 5W-30 (all temperatures)

  – SAE 15W-40 (only temperatures above 0°F)
- RPM:

  – 3TNV80FT: 2600 ±50 RPM (PTO not engaged) Idle: 1400 ±50 RPM

  – 3TNV88C: 3000 ±50 RPM (PTO not engaged) Idle: 1400 ±50 RPM

  – 3TNV86CT: 3000 ±50 RPM (PTO not engaged) Idle: 1400 ±50 RPM

Fuel System

- Capacity: 12 gal. (45.4 L)
- Fuel Recommendations:

  – General Notes:

  ◊ Never use kerosene or gasoline instead of diesel fuel.

  ◊ Never mix kerosene or used engine oil with the diesel fuel.

  ◊ Never keep fuel in containers with zinc plating on the inside.

  ◊ Do not use fuel additives.

  ◊ Use only clean, fresh diesel fuel or biodiesel fuels.

  ◊ Purchase fuel in quantities that can be used within 180 days to ensure fuel freshness.

  – **Petroleum Diesel**

  Cetane rating: 45 or higher

  Sulfur content: Ultra-low sulfur (<15 ppm)

  Diesel Fuel Specification:

  ◊ ASTM D975

  ◊ No. 1-D S15

  ◊ No. 2-D S15

  Use summer-grade diesel fuel (No. 2-D) at temperatures above -7°C (20°F) and winter-grade fuel (No. 1-D or No. 1-D/2-D blend) below that temperature.

  Note: Use of winter-grade fuel at lower temperatures provides lower flash point and cold flow characteristics which eases starting and reduces fuel filter plugging.

  Using summer-grade fuel above -7°C (20°F) contributes toward longer fuel pump life and increased power compared to winter-grade fuel.

  – **Biodiesel**

  This machine can also use a biodiesel blended fuel of up to B20 (20% biodiesel, 80% petroleum diesel).

  Sulfur content: Ultra-low sulfur (<15 ppm)

  Biodiesel fuel specification: ASTM D6751 or EN14214

  Blended fuel specification: ASTM D975, EN590, or JIS K2204

  Important: The petroleum diesel portion must be ultra-low sulfur.

  Observe the following precautions:

  ◊ Biodiesel blends may damage painted surfaces.

  ◊ Use B5 (biodiesel content of 5%) or lesser blends in cold weather.

  ◊ Monitor seals, hoses, gaskets in contact with fuel as they may be degraded over time.

  ◊ Fuel filter plugging may be expected for a time after converting to biodiesel blends.

◊ Contact your Authorized Exmark Distributor if you wish for more information on biodiesel.

Electrical System

- Charging System: External Alternator
- Charging Capacity:
  - All Except 144 Inch Deck Models: 55 amps
  - 144 Inch Deck Models: 140 amps
- Battery Type: BCI Group 26
- Recommended Minimum Battery CCA: 540 CCA
- Battery Voltage: 12 Volt
- Polarity: Negative Ground
- Fuses:
  - 3TNV80FT: Three 15 amp blade type; one 10 amp blade type
  - 3TNV88C: Three 15 amp blade type; one 25 amp blade type
  - 3TNV86CT: Three 15 amp blade type; one 25 amp blade type; two 60 amp blade type

Safety Interlock System

- Brake must be engaged, and motion control levers out (neutral lock) to start engine. (It is not necessary for the operator to be in the seat to start the engine.)
- Operator must be in seat when PTO is engaged, brake is disengaged, or motion control levers are moved in or engine will stop.
- Engine will stop if either the left, the right, or both levers are moved from neutral lock position while brake is engaged.

Engine Overheat Protection System

PTO will disengage, an alarm will sound, and a bar graph will display the engine temperature when it reaches an overheat condition. The PTO will not re-engage until the engine has cooled and the PTO switch is manually shut-off and re-engaged.

Note: If the engine coolant level is below the indicator line on the overflow bottle when the engine is cold, the coolant temperature gauge may not register correctly during operation and/or the warning buzzer may not sound if the engine overheats. Refer to **Check Engine Coolant Level** in Maintenance.

Cooling System

- Fan: Belt driven
- Twin Fan (144 Inch Deck Models Only): Electric driven, variable speed, and reversing.
- Coolant Liquid: 50/50 solution of water and permanent ethylene glycol antifreeze. The use of Havoline® Xtended Life coolant is recommended.
- Coolant Capacity: 10 quarts (9.5 L)

Operator Controls

- Steering and Motion Control:

  Note: Motion control levers are adjustable to two heights.

  - Separate levers, on each side of the console, control speed and direction of travel of the respective drive wheels.
  - Steering is controlled by varying the position of the levers relative to each other.
  - Moving motion control levers outward (in slots) locks the drive system in neutral.
- PTO Engagement Switch: Engages wet clutch (to drive belt) which engages mower blades.
- Parking Brake Lever (For All Except 144 Inch Deck Models): Engages parking brake.
- Deck Lift Switch (Hydraulic Cylinder):
  - 60 and 72 Inch Decks: Raises/lowers the deck to set cutting height.
  - 96 and 144 Inch Deck Models: Raises/lowers the center deck to set cutting height and folds/unfolds the wings.

Seat

- Type: Deluxe suspension (adjustable spring suspension) seat with high back, padded flip-up armrests, and integral safety switch. Seat height remains the same. Seat Isolation System for reduced vibration, to enhance ride of standard seat.
- Mounting: Hinged to tilt up for access to hydraulic reservoir and other components. Held in tilted position with prop rod. Adjustable fore and aft seat track.
- Armrests: Molded adjustable flip-up armrests.
- Seat Safety Switch: Integrated seat switch. Time delay seat switch eliminates rough ground cut-outs.

Hydrostatic Ground Drive System

- Hydrostatic Transmission: Kanzaki. KPS18T
- Wheel Motors: Two Hydro-Gear "H" Motors (All Models Except 144 Inch Deck Models)
- Wheel Motors: Two Danfoss Motors with Omni gearbox (144 Inch Deck Models Only)
- Hydraulic Oil Type: Exmark Ruby Tran™ oil.

  Part No. 135-2834
- Hydraulic Oil Capacity:
  - All Models Except 144 Inch Deck: 15 qt. (14.2 L)
  - 144 Inch Deck Models: 14 qt. (13.3 L)
- Hydraulic Filter: Replaceable cartridge type.

  P/N 135-2252: 10 microns
- Drive Wheel Gear Box Oil Type: SAE 75W-90 Synthetic gear lube (144 Inch Deck Models Only)
- Speeds:
  - 3TNV80FT:
    - ◊ 0-11.0 mph (17.7 km/hr) forward.
    - ◊ 0-6.0 mph (9.7 km/hr) reverse
  - 3TNV88C:
    - ◊ 0-12.5 mph (20.1 km/hr) forward
    - ◊ 0-7.0 mph (11.3 km/hr) reverse
  - 3TNV86CT:
    - ◊ In Low:
      - ◊ 0-10 mph (16.1 km/hr) forward
      - ◊ 0-6.0 mph (9.7 km/hr) reverse
    - ◊ In High:
      - ◊ 0-17 mph (27.4 km/hr) forward.
      - ◊ 0-9.0 mph (14.5 km/hr) reverse
- Drive wheel release valves allow machine to be moved when engine is not running.

Deck Gear Box

Oil Type: SAE 75W-90 Synthetic gear lube

Capacity: 14 oz (420 ml)

Dimensions

Overall Width:

Side Discharge 60 and 72 Inch Models:

	60 inch Deck	72 inch Deck
Without Deck	55.6 inches (141.2 cm)	60.0 inches (152.4 cm)
Deflector Up	61.4 inches (156.0 cm)	73.4 inches (186.4 cm)
Deflector Down	72.8 inches (184.9 cm)	84.9 inches (215.6 cm)

Rear Discharge 72 and 96 Inch Models:

72 inch Deck	96 inch Deck (Working width)	96 inch Deck (Transport width set at 3 inch height of cut)
78.2 inches (198.7 cm)	101.3 inches (257.3 cm)	72.5 inches (184.2 cm)

Rear Discharge 144 Inch Models:

144 inch Deck (Working width)	144 inch Deck (Transport width set at 3 inch height of cut)
144.9 inches (368.1 cm)	83 inches (210.8 cm)

Overall Length:

Side Discharge Models:

	60 inch Deck	72 inch Deck
Roll Bar - Up or down	96.4 inches (244.9 cm)	99.6 inches (253.0 cm)

Rear Discharge Models:

	60 and 72 inch Decks	96 inch Deck	144 inch Deck
Roll Bar - Up or down	100.6 inches (255.5 cm)	97.3 inches (247.1 cm)	101.3 inches (257.3 cm)

Overall Height:

60, 72, and 96 Inch Deck Models:

Roll Bar - Up	Roll Bar - Down
71.8 inches (182.4 cm)	51.0 inches (129.5 cm)

144 Units :

Roll Bar - Up	Roll Bar - Down
72.0 inches (182.9 cm)	51.2 inches (130.0 cm)

Tread Width: (Center to Center of Tires, Widthwise)

Drive Wheels

60 and 72 inch Decks	96 inch Deck	144 inch Deck
44.1 inches (112.0 cm)	46.1 inches (117.1 cm)	51.5 inches (130.8 cm)

Caster Wheels

Discharge	60 inch Deck	72 inch Decks	96 and 144 inch Decks
Side	39.9 inches (101.3 cm)	47.5 inches (120.7 cm)	—
Rear	33.1 inches (84.0 cm)	33.1 inches (84.0 cm)	47.5 inches (120.7 cm)

Wheel Base: (Center of Caster Tire to Center of Drive Tire)

Side Discharge

60 inch Deck	72 inch Deck
57.6 inches (146.3 cm)	60.9 inches (154.7 cm)

Rear Discharge

60 inch Deck	72 inch Deck	96 inch Deck	144 inch Deck
61.9 inches (157.2 cm)	61.9 inches (157.2 cm)	56.3 inches (143.0 cm)	57.7 inches (146.6 cm)

Curb Weight

3TNV80FT Models:

Discharge	60 inch Deck	72 inch Deck
Side	1915 lb (869 kg)	1930 lb (875 kg)
Rear	—	2041 lb (926 kg)

3TNV88C Models:

Discharge	96 inch Deck
Rear	2584 lb (1172 kg)

3TNV86CT Models:

Discharge	144 inch Deck
Rear	3218 lb (1459 kg)

Torque Requirements

Bolt Location	Torque
Blade Drive Sheave Mounting Nut	130-160 ft-lb (176-217 N-m)
Blade Mounting Bolt (lubricate with anti-seize)	55-60 ft-lb (75-81 N-m)
Anti-Scalp Roller Nyloc Nut — Side Discharge Units Only (See Figure 24)	50-55 ft-lb (68-75 N-m)
Anti-Scalp Roller Nyloc Nut — Rear Discharge Units Only (See Figure 25)	30-35 ft-lb 41-47 N-m)
Engine Mount Bracket Bolts	30-36 ft-lb (41-49 N-m)
Wheel Lug Nuts	85-105 ft-lb 115-142 N-m)
Wheel Motor Mounting Bolts	72-77 ft-lb (98-104 N-m)
Wheel Hub Slotted Nut	275-425 ft-lb (373-576 N-m)
Rollover Protection System (Roll Bar) Mounting Bolts	100–110 ft-lb (136-149 N-m)
Front Frame to Rear Frame	238–292 ft-lb (323-396 N-m)

Product Overview

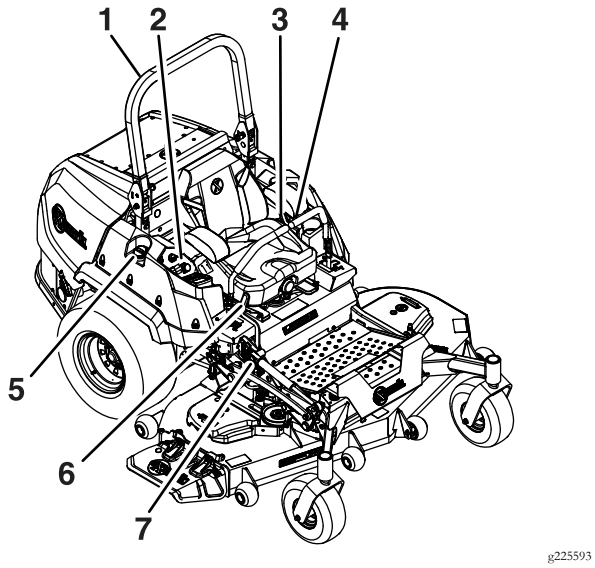

Figure 3

Model with 60 or 72 Inch Side Discharge Deck

1. Rollover Protection System (ROPS)
2. Engine Controls (right console)
3. Seat belt
4. Motion control levers
5. Fuel cap (both sides)
6. Parking brake
7. Height of cut

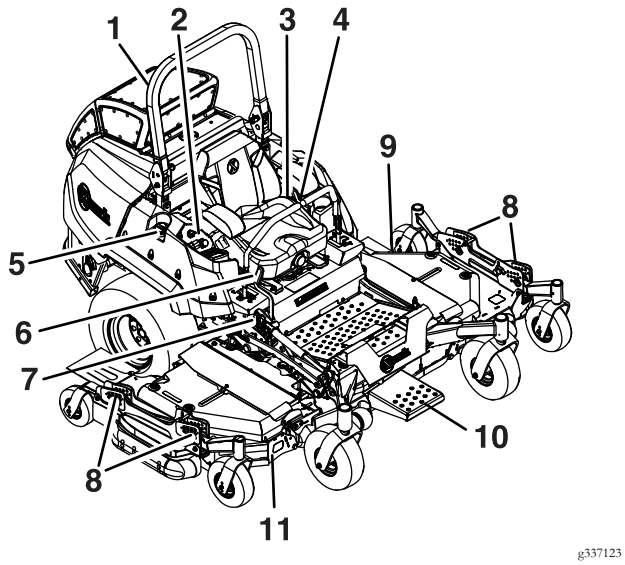

g337123

Figure 4

Model with 96 Inch Deck

1. Rollover Protection System (ROPS)
2. Engine Controls (right console)
3. Seat belt
4. Motion control levers
5. Fuel cap (both sides)
6. Parking brake
7. Center deck height of cut
8. Wing deck height of cut
9. Left wing deck
10. Step
11. Right wing deck

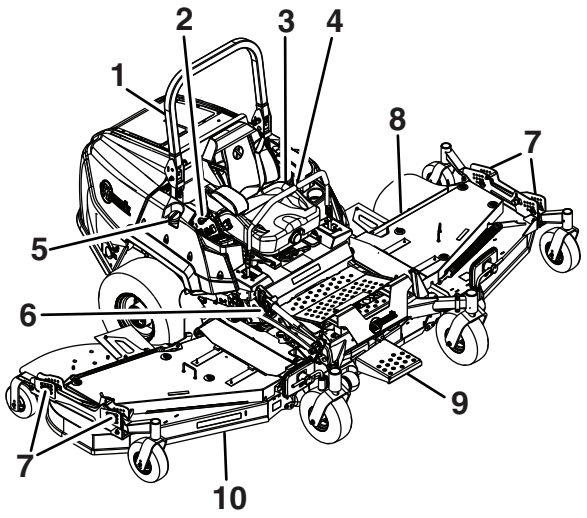

g362078

Figure 5

Model with 144 Inch Deck

1. Rollover Protection System (ROPS)
2. Engine Controls (right console)
3. Seat belt
4. Motion control levers (park brake)
5. Fuel cap (both sides)
6. Center deck height of cut
7. Wing deck height of cut
8. Left wing deck
9. Step
10. Right wing deck

Operation

Note: Determine the left and right sides of the machine from the normal operating position.

Controls

Become familiar with all the controls before starting the engine and operating the machine.

Motion Control Levers

The motion control levers located on each side of the console control the forward and reverse motion of the machine.

Moving the levers forward or backward turns the wheel on the same side forward or reverse respectively. Wheel speed is proportional to the amount the lever is moved.

Moving the levers outward from the center position into the T-slot locks them in the neutral position (Figure 6).

Note: When the motion control levers are in the neutral position, a LCD indicator displays on the message display.

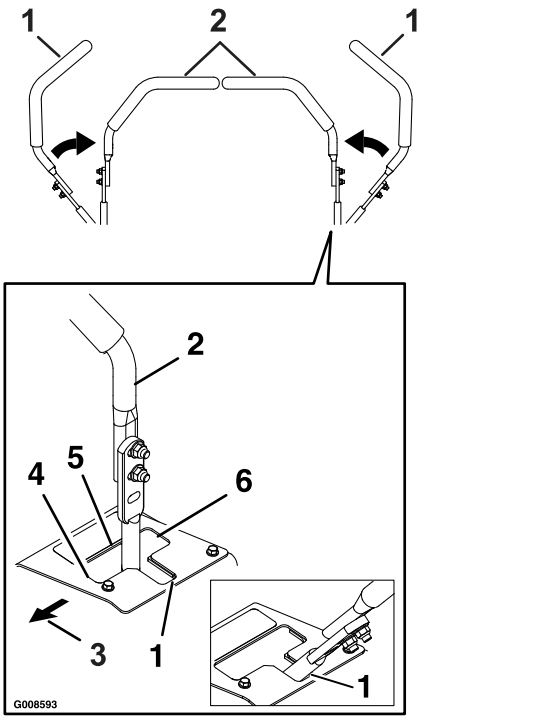

g008593

Figure 6

1. All Models Except 144 Inch Deck: Neutral lock position (handles out). 144 Inch Deck Models: Neutral lock position and park brake (handles out).
2. Neutral operate position (handles in)
3. Front of Unit
4. Forward
5. Neutral (operate)
6. Reverse

RED Equipped Logic Display Unit (LDU)

Located on the right console.

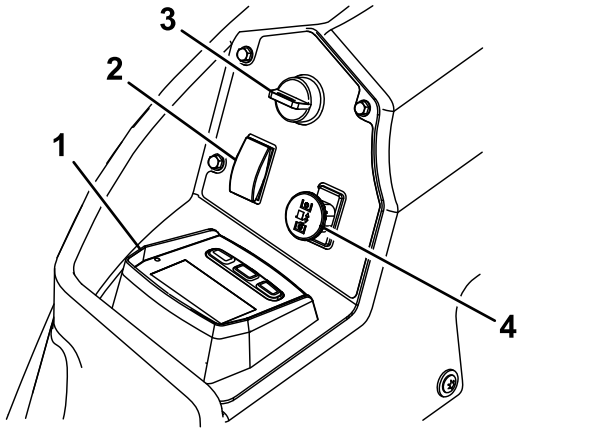

Figure 7

1. RED Equipped Logic Display Unit (LDU)
2. Deck lift switch (also folds wings on 96 inch deck)
3. Ignition switch
4. PTO engagement switch

The RED Equipped Logic Display Unit (LDU) monitors and displays machine system information.

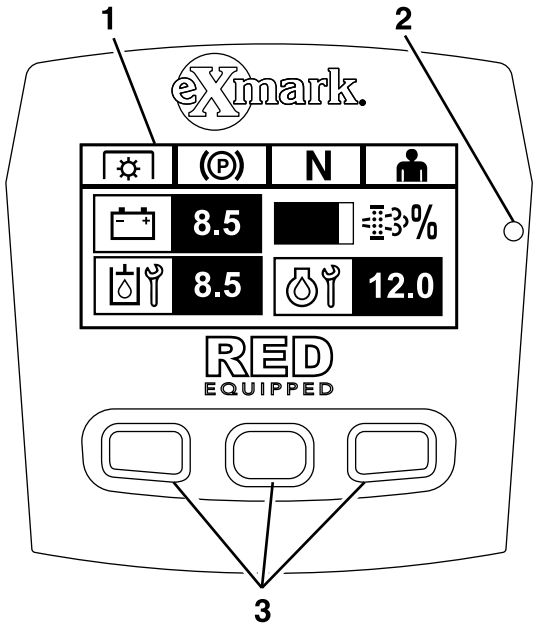

Figure 8

LDU (Logic Display Unit)

1. Information screen
2. LED status light
3. Push buttons

Refer to the **RED Equipped User's Guide-Diesel Models** for detailed information explaining the Operator interface allowing users to access information, reset counters, modify system settings, and troubleshoot the equipment.

RED Equipped Logic Display Unit (LDU) For 144 Inch Deck Models Only

Located on the right console.

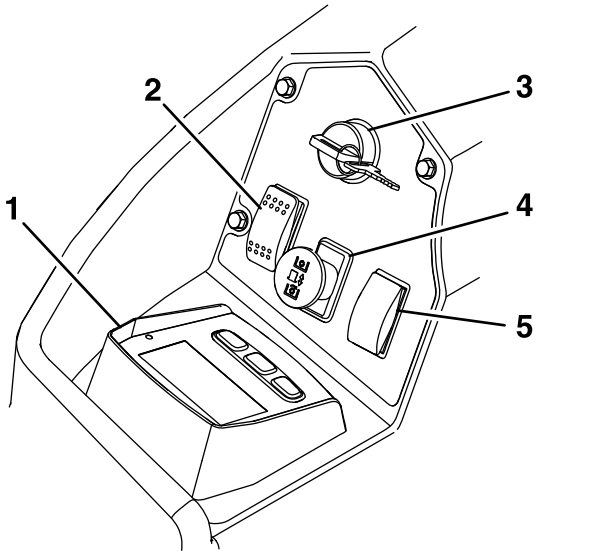

Figure 9

1. RED Equipped Logic Display Unit (LDU)
2. Deck lift and fold switch
3. Ignition switch
4. PTO engagement switch
5. Ground drive speed switch

The RED Equipped Logic Display Unit (LDU) monitors and displays machine system information.

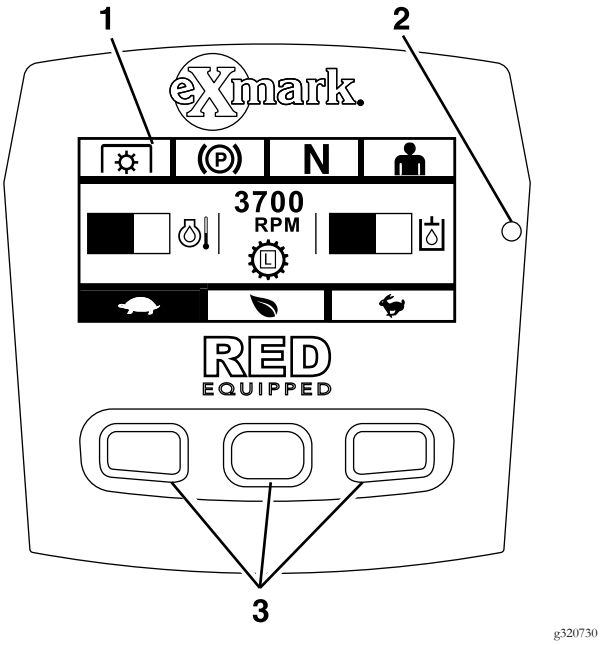

Figure 10
LDU (Logic Display Unit)

Refer to the **RED Equipped User's Guide** for detailed information explaining the Operator interface allowing users to access information, reset counters, modify system settings, and troubleshoot the equipment.

RED Equipped Information Screen

Located at the top of the LDU, above the push buttons (see Figure 7).

The information screen displays information relative to machine operation and is backlit for viewing in low light situations.

Refer to the **RED Equipped User's Guide-Diesel Models** for more information.

RED Equipped Push Buttons

Located at the bottom of the LDU, below the information screen.

The icons displayed on the information screen above the buttons indicate the current function. The push buttons allow the user to select the engine speed as well as navigate through system menus.

Refer to the **RED Equipped User's Guide-Diesel Models** for more information.

RED Equipped LED Status Light

Located on the right side of the LDU.

The LED is multi-colored to indicate the system status. During startup, the LED will illuminate red, then orange, then green to verify functionality.

- **Solid Green** — indicates normal operating activity
- **Blinking Red** — indicates a fault is active
- **Blinking Green and Orange**— indicates a clutch reset is required

Refer to the **RED Equipped User's Guide-Diesel Models** for more information.

RED Equipped Audible Alarm

Located behind the seat and to the left of the lower ROPS leg.

The audible alarm will sound if an error occurs to indicate the issue to the operator. During startup, the alarm will sound briefly to verify functionality.

When the alarm sounds, the error message will display and the LED will turn red.

- Continuous sound indicates critical errors.
- Chirping sound indicates less critical errors, such as required maintenance or service intervals.

Refer to the **RED Equipped User's Guide-Diesel Models** for more information.

Brake Lever (All Except 144 Inch Deck Models)

Located on right side of unit, just to the front of the RH motion control lever.

The brake lever engages a parking brake on the drive wheels.

Note: The LCD indicator appears in the message display on the RH console when the park brake is engaged (see Figure 7).

Pull the lever up and rearward to engage the brake.

Push the lever forward and down to disengage the brake.

The unit must be tied down and brake engaged when transporting.

Neutral Park Brake for 144 Inch Deck Models Only

Moving the levers outward from the center position into the T-slot locks them in the neutral position and sets the parking brake (see Figure 6).

When the lever are in the neutral position, the park brake is activated.

Note: The LCD indicator appears in the message display on the RH console when the park brake is engaged (see Figure 7).

Ignition Switch

Located on right fuel tank.

The ignition switch is used to start and stop the engine. The switch has three positions "OFF", "ON" and "START". Insert key into switch and rotate clockwise to the "ON" position. Rotate clockwise to the next position to engage the starter (key must be held against spring pressure in this position).

Note: Brake must be engaged and the motion control levers out (neutral lock position) to start engine. (It is not necessary for the operator to be in the seat to start the engine.)

Note: The LCD indicators appear when each control meets the "safe to start" mode (e.g. the indicator turns on when the operator is in the seat.)

Note: The engine ECU controls the glow plugs during cold starts. If the coolant is at a low enough temperature, the glow symbol will be displayed on the RED LDU and the starter will not begin cranking the engine when the key is turned to the "START" position. The glow plugs will be activated in the "ON" or "START" position. Once the glow has been on long enough for the current temperature, the glow symbol on the RED LDU will disappear and the engine will crank when turned to "START".

Note: The system will allow the unit to start with the PTO switch in the pulled out (up) position, but will not engage the blades. The PTO engagement switch must be reset to engage the PTO.

Hour Meter

Located on the information screen of the RED Equipped LDU of the RH console.

The hour meter records the number of hours that the engine has run.

Hours are displayed in Engine-Off screen or in the Engine Hour Counter menu (refer to the **RED Equipped User's Guide-Diesel Models** for more information).

Drive Wheel Release Valves (All Except 144 Inch Deck Models)

⚠ WARNING

Hands may become entangled in the rotating drive components below the engine deck, which could result in serious injury or death.

Stop engine, remove key, allow all the moving parts to stop before accessing the drive wheel release valves.

⚠ WARNING

The engine and hydraulic drive units can become very hot. Touching a hot engine or hydraulic drive components can cause severe burns.

Allow the engine and hydraulic drive components to cool completely before accessing the drive wheel release valves.

Located on each side of the hydrostatic pump.

Drive wheel release valves are used to release the hydrostatic drive system to allow the machine to be pushed without the engine running.

Rotate each bypass valve counterclockwise one turn to release; rotate clockwise to reset system. **Do Not overtighten. Do Not tow machine.**

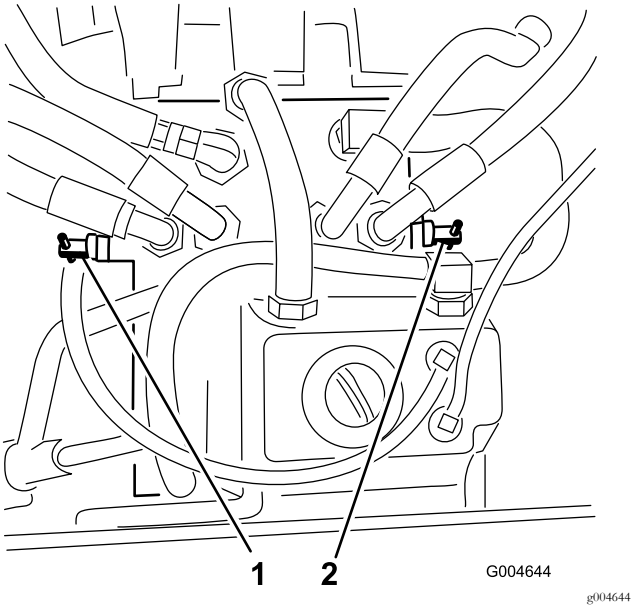

Figure 11

1. Right bypass valve
2. Left bypass valve

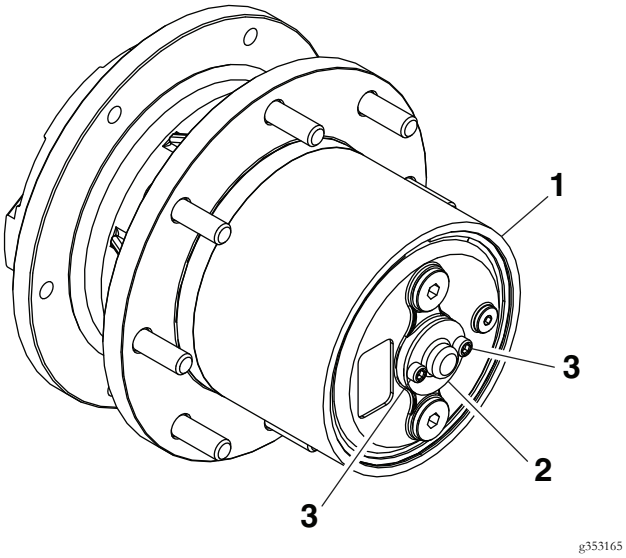

Figure 12

1. Wheel motor gearbox
2. Cap
3. Bolts

Motor Brake Release for 144 Inch Deck Models Only

Located on each of the wheel motor gearboxes. Releasing the motor brake is used to allow the machine to be moved without the engine running.

1. Before releasing the motor brakes, the wheels must be chocked or blocked and the machine needs to be parked on a level surface.
2. Remove and retain the bolts from the wheel motor (Figure 12).
3. Flip the cap inward to the wheel motor.
4. Use the retained bolts and tighten down the flipped cap until the brake releases.
5. Reverse the process to reapply the brake.

Wing Deck Fold Release Valve

If the engine loses power, the wings can be folded or unfolded manually.

⚠ WARNING

The wing decks are very heavy. Lifting the wing decks by hand, could result in serious injury or death.

Use lifting equipment to raise or lower the deck manually.

- **To fold the wings:**
  1. Hold set screws with 1/8 inch allen wrench, loosen sealing nuts with 1/2 inch wrench until nut is flush with the lifting end of the set screw (approximately six turns)–reference Figure 13.

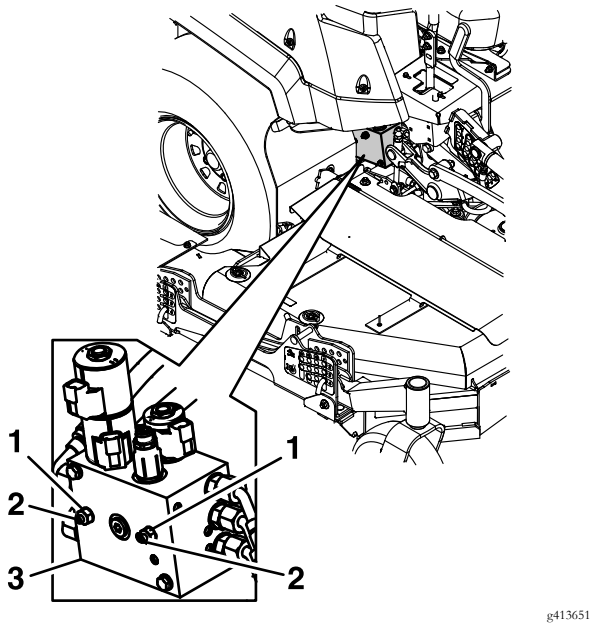

Figure 13

1. Sealing nuts
2. Set screw
3. Manifold

2. Remove wrenches and tighten the set screw BY HAND approximately four turns until a slight resistance is felt. Continue to turn by hand 1 1/2 more turns to unseat the load holding check valves.

   Important: Do Not tighten the set screws beyond this point, damage may result.

3. Hold set screws with 1/8 inch allen wrench, snug sealing nuts with 1/2 inch wrench to the manifold body.
4. Using lifting equipment with at least a 227 kg (500 lb) lifting capacity, carefully pull one wing deck outward, then upward to fold. Secure the wing with the transport lock pin. Repeat for other wing.

- **To unfold the wings and reset the wing fold valve:**

1. Using lifting equipment with at least a 227 kg (500 lb) lifting capacity, remove the transport lock pin and carefully lower the wing to the ground.
2. Hold set screws with 1/8 inch allen wrench, loosen sealing nut with 1/2 inch wrench (reference Figure 13).
3. Loosen the set screw and turn approximately 6 turns.
4. Holding the set screws with 1/8 inch allen wrench, snug the sealing nuts to 8 ft-lb (10 N-m) with 1/2 inch wrench to the manifold body.

PTO Engagement Switch

Located behind the RED Equipped LDU on the RH console (see Figure 7).

Switch must be "ON" (pulled up) to engage the blades. Switch is "OFF" (pushed down) to disengage the blades.

The LCD indicator will appear on the information screen of the RED Equipped LDU when the PTO switch is disengaged.

Note: Engaging and disengaging the PTO switch changes the engine throttle between "mow" and "transport" mode.

Note: The starter will crank with the PTO switch in the "ON" (pulled up) position; however, the system will disengage the PTO and a PTO reset error will occur. Engaging the PTO will require the operator to reset the PTO switch by turning it "OFF" (pushed down) and then turning it "ON".

Important: On 96 and 144 inch Decks: The wings must be unfolded before the PTO can be engaged.

Deck Lift Switch

Located on the back panel of the RH console (see Figure 7).

- 60 and 72 inch Decks:
  - Push the top of the switch to raise the deck.
  - Push the bottom of the switch to lower the deck.
- 96 and 144 inch Decks:
  - Push the top of switch to raise the center deck and fold up the outer wings.
  - Push the bottom of switch to lower the center deck and outer wings.

Ground Drive Speed Switch for 144 Inch Deck Models Only

Located on the back panel of the RH console to the left of the PTO switch (see Figure 9)

- Push the top of switch to place the transmission in high range.
- Push the bottom of switch to place the transmission in low range.

Refer to the **RED Equipped User's Guide-Diesel Models** for more information.

Before Operation

Before Operation Safety

- Evaluate the terrain to determine what accessories and attachments are needed to properly and safely perform the job. Only use accessories and attachments approved by Exmark.
- Inspect the area where the machine is to be used and remove all rocks, toys, sticks, wires, bones, and other foreign objects. These can be thrown or interfere with the operation of the machine and may cause personal injury to the operator or bystanders.
- This mower was designed for one operator only. Do not carry passengers.
- Wear appropriate personal protective equipment such as safety glasses, long pants, substantial slip-resistant footwear, and hearing protection. Tie back long hair and avoid loose clothing and loose jewelry which may get tangled in moving parts.
- This machine produces sound levels in excess of 85 dBA at the operator's ear and can cause hearing loss through extended periods of exposure. Wear hearing protection when operating this machine.
- Check that the following items are in place and in proper working condition: the operator presence controls, safety switches, guards, shields, discharge deflector and/or the entire grass catcher system. Do not operate the machine unless they are in proper working condition. Replace worn or deteriorated parts with genuine Exmark parts when necessary.

⚠ DANGER

It is essential that operator safety mechanisms be connected and in proper operating condition prior to use. Contacting the blade will result in serious personal injury.

Shut off the engine, remove the key, and wait for all moving parts to stop before leaving the operating position. When the key is turned to the "OFF" position, the engine should shut off and the blade should stop. If not, stop using the machine immediately and contact an Authorized Service Dealer.

- Do Not operate the mower when people, especially children, or pets are in the area. Shut off the machine and attachment(s) if anyone enters the area.
- Do Not operate the machine without the entire grass collection system, discharge deflector, or other safety devices in place and in proper working condition. Grass catcher components are subject to wear, damage and deterioration, which could expose moving parts or allow objects to be thrown. Frequently check for worn or deteriorating components and replace them with the manufacturer's recommended parts when necessary.

Fuel Safety

⚠ DANGER

In certain conditions diesel fuel is extremely flammable and vapors are explosive.

A fire or explosion from diesel fuel can burn you, others, and cause property damage.

- **Fill the fuel tank outdoors on level ground, in an open area, when the engine is cold. If fuel is spilled, Do Not attempt to start the engine. Move away from the area of the spill and avoid creating any source of ignition until fuel vapors have dissipated.**
- **Do Not refill the fuel tank or drain the machine indoors or inside an enclosed trailer.**
- **Never smoke when handling diesel fuel, and stay away from an open flame or where diesel fuel fumes may be ignited by spark.**
- **Add fuel before starting the engine. Never remove the cap of the fuel tank or add fuel when engine is running or when the engine is hot.**
- **Store diesel fuel in an approved container and keep it out of the reach of children.**
- **Do Not operate without entire exhaust system in place and in proper working condition.**

- In certain conditions during fueling, static electricity can be released causing a spark which can ignite fuel vapors.
  - Do not fill containers inside a vehicle or on a truck or trailer bed with a plastic liner. Always place containers on the ground and away from your vehicle before filling.
  - When practical, remove fuel-powered equipment from the truck or trailer and refuel the equipment with its wheels on the ground. If this is not possible, then refuel such equipment on a truck or trailer from a portable container, rather than from a fuel dispenser nozzle.
  - If a fuel dispenser nozzle is used, keep the nozzle in contact with the rim of the fuel tank or container opening at all times until fueling is complete. Do Not use a nozzle lock open device.
- Do Not overfill the fuel tank. Fill the fuel tank to the bottom of the filler neck. The empty space in the tank allows diesel fuel to expand. Overfilling may result in fuel leakage or damage to the engine or emission system.
- Diesel fuel is harmful or fatal if swallowed. Long-term exposure to vapors may cause serious injury and illness.
  - Avoid prolonged breathing of vapors.
  - Keep face away from nozzle and fuel tank/container opening.
  - Keep away from eyes and skin.

⚠ WARNING

Fuel system components are under high pressure. The use of improper components can result in system failure, fuel leakage and possible explosion.

Use only approved fuel lines and fuel filters for high pressure systems.

To help prevent fires:

- Keep engine and engine area free from accumulation of grass, leaves, excessive grease or oil, and other debris which can accumulate in these areas.
- Clean up oil and fuel spills and remove fuel soaked debris.
- Allow the machine to cool before storing the machine in any enclosure. Do not store the machine or fuel container, or refuel, where there is an open flame, spark, or pilot light such as on a water heater or other appliance.

Operating Instructions

During Operation Safety

General Safety

The operator must use their full attention when operating the machine. **Do Not** engage in any activity that causes distractions; otherwise, injury or property damage may occur.

⚠ WARNING

Operating engine parts, especially the muffler, become extremely hot. Severe burns can occur on contact and debris, such as leaves, grass, brush, etc. can catch fire.

Clean the machine as stated in the Maintenance section. Keep engine and engine area free from accumulation of grass, leaves, excessive grease or oil, and other debris which can accumulate in these areas.

- Operate the engine only in well-ventilated areas. Exhaust gases contain carbon monoxide, which is an odorless deadly poison.
- Do not operate the machine while ill, tired, or under the influence of alcohol or drugs.
- Operate the machine only in good visibility and appropriate weather conditions. Do not operate the machine when there is the risk of lightning.
- Keep away from holes, ruts, bumps, rocks, and other hidden hazards. Use care when approaching blind corners, shrubs, trees, tall grass or other objects that may hide obstacles or obscure vision. Uneven terrain could overturn the machine.
- Start the engine with your feet well away from the blades.
- Do not operate the machine without all safety shields, guards, switches, and other devices in place and in proper working condition.
- Keep your hands and feet away from the moving parts. Keep clear of the discharge opening.
- Do not mow with the discharge deflector raised, removed, or altered unless there is a grass-collection system or mulch kit in place and working properly.
- Be aware of the mower discharge path and direct discharge away from others. Avoid discharging material against a wall or obstruction as the material may ricochet back toward the operator. Stop the blades, slow down, and use caution when crossing surfaces other than grass and when transporting the mower to and from the area to be mowed.
- Be alert, slow down and use caution when making turns. Do not mow in reverse unless it is absolutely necessary. Always look down and behind you before moving the machine in reverse.
- Park the machine on level ground. Stop engine, wait for all moving parts to stop, and remove key.
  - Before checking, cleaning or working on the mower.
  - After striking a foreign object or abnormal vibration occurs (inspect the mower for damage and make repairs before restarting and operating the mower).
  - Before clearing blockages.
  - Whenever you leave the mower. Do Not leave a running machine unattended.
- Stop engine, wait for all moving parts to stop:
  - Before refueling.
  - Before dumping the grass catcher.
  - Before making height adjustments.
- Tragic accidents can occur if the operator is not alert to the presence of children. Children are often attracted to the machine and the mowing activity. Never assume that children will remain where you last saw them.
  - Keep children out of the mowing area and under the watchful care of another responsible adult, not the operator.
  - Be alert and turn the machine off if children enter the area.
  - Before and while backing or changing direction, look behind, down, and side-to-side for small children.
  - Never allow children to operate the machine.
  - Do Not carry children, even with the blades shut off. Children could fall off and be seriously injured or interfere with the safe operation of the machine. Children that have been given rides in the past could suddenly appear in the working area for another ride and be run over or backed over by the machine.
- Do not use the machine as a towing vehicle unless it has a hitch installed. Attach towed equipment to the machine only at the hitch point.

Slope Safety

- Slopes are a major factor related to loss of control and rollover accidents, which can result in severe injury or death. The operator is responsible for

safe slope operation. Operating the machine on any slope requires extra caution. Before using the machine on a slope, the operator must:

- Review and understand the slope instructions in the manual and on the machine.
- Use an angle indicator to determine the approximate slope angle of the area.
- Never operate on slopes greater than 15 degrees.
- Evaluate the site conditions of the day to determine if the slope is safe for machine operation. Use common sense and good judgment when performing this evaluation. Changes in the terrain, such as moisture, can quickly affect the operation of the machine on a slope.

- Identify hazards at the base of the slope. Do Not operate the machine near drop offs, ditches, embankments, water or other hazards. The machine could suddenly roll over if a wheel goes over the edge or the edge collapses. Keep a safe distance (twice the width of the machine) between the machine and any hazard. Use a walk behind machine or a hand trimmer to mow the grass in these areas.

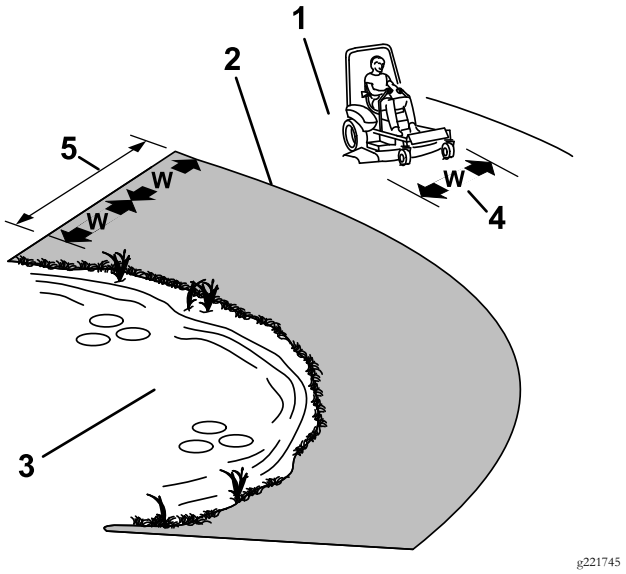

Figure 14

1. Safe Zone-Use the mower here on slopes less than 15 degrees
2. Danger Zone-Use a walk-behind mower and/or hand trimmer on slopes greater than 15 degrees
3. Water
4. W=width of the machine
5. Keep a safe distance (twice the width of the machine) between the machine and any hazard.

- Avoid starting, stopping or turning the machine on slopes. Avoid making sudden changes in speed or direction; turn slowly and gradually.
- Do Not operate a machine under any conditions where traction, steering or stability is in question. Be aware that operating the machine on wet grass, across slopes or downhill may cause the machine to lose traction. Loss of traction to the drive wheels may result in sliding and a loss of braking and steering. The machine can slide even if the drive wheels are stopped.
- Remove or mark obstacles such as ditches, holes, ruts, bumps, rocks or other hidden hazards. Tall grass can hide obstacles. Uneven terrain could overturn the machine.
- Use extra care while operating with accessories or attachments, such as grass collection systems. These can change the stability of the machine and cause a loss of control. Follow directions for counter weights.
- If possible, keep the deck lowered to the ground while operating on slopes. Raising the deck while operating on slopes can cause the machine to become unstable.

Rollover Protection System (ROPS) Safety

⚠ WARNING

There is no rollover protection when the ROPS (roll bar) is down. Wheels dropping over edges, ditches, steep banks, or water can cause rollovers, which may result in serious injury, death or drowning.

- **Do Not remove the ROPS.**
- **Keep the roll bar in the fully raised and locked position and always wear your seat belt whenever the roll bar is up.**
- **Lower the roll bar only when absolutely necessary.**
- **Do Not wear seat belt when the roll bar is down.**
- **Drive slowly and carefully.**
- **Raise the roll bar as soon as clearance permits.**

- Be certain that the seat belt can be released quickly in the event of an emergency.
- Check carefully for overhead clearances (i.e. branches, doorways, and electrical wires) before driving under any objects and Do Not contact them.
- In the event of a rollover, take the machine to an Authorized Service Dealer to have the ROPS inspected. Replace damaged ROPS components. Do not repair or alter them.
- Only Exmark approved accessories or attachments may be added to the ROPS.

Adjusting the Mirrors–144 Inch Deck Models Only

With the operator in the seated position, the mirrors should provide a wide-angle view to help with blind spots.

Adjust the left and right mirror for each operator to ensure optimal viewing angle.

Starting the Engine

1. Move the motion control levers out to the neutral lock position.
2. Engage the parking brake. For all models except 144 inch deck models, pull the lever up and back to engage the parking brake. For 144 inch deck models, the motion control levers placed in the neutral position engages the park brake.
3. Push down on the PTO switch to the "disengage" position.

   Note: It is not necessary for the operator to be in the seat to start the engine.
4. Turn ignition switch to the "START" position. Release the switch as soon as the engine starts.

   Important: Do Not crank the engine continuously for more than ten seconds at a time. If the engine does not start, allow a 60 second cool-down period between starting attempts. Failure to follow these guidelines can burn out the starter motor.

Raising and Locking the Outer Wings– 96 and 144 Inch Decks

1. Be sure that all persons are clear of the deck wings. Press and hold the top of the deck control switch; the center deck will raise first and then the wings.
2. Stop engine, wait for all moving parts to stop, engage the parking brake and remove the key.
3. Remove the clevis pin and hairpin from the storage location and secure each wing in the up position..

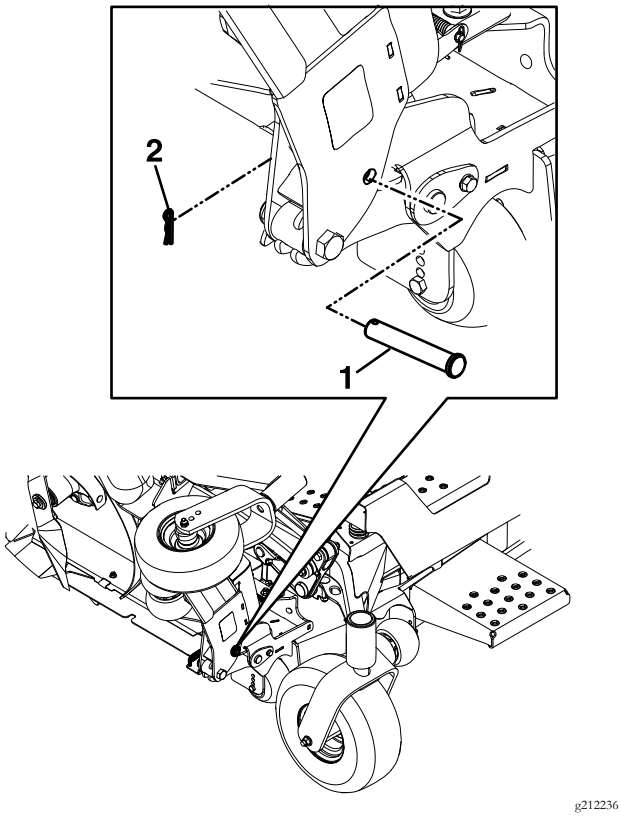

Figure 15
96 Inch Deck Pin Lock

1. Clevis pin
2. Hairpin

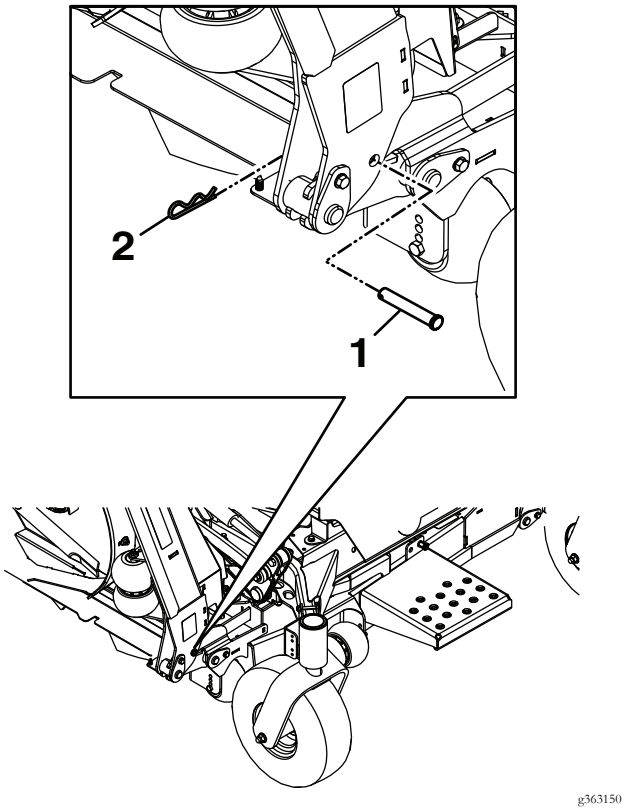

Figure 16
144 Inch Deck Pin Lock

1. Clevis pin
2. Hairpin

Unlocking and Lowering the Outer Wings– 96 and 144 Inch Decks

Important: The outer deck wings need to be lowered into the mowing position before the PTO will engage.

1. Remove the clevis pin and hairpin that secures each wing in the up position. Place them in the storage position.

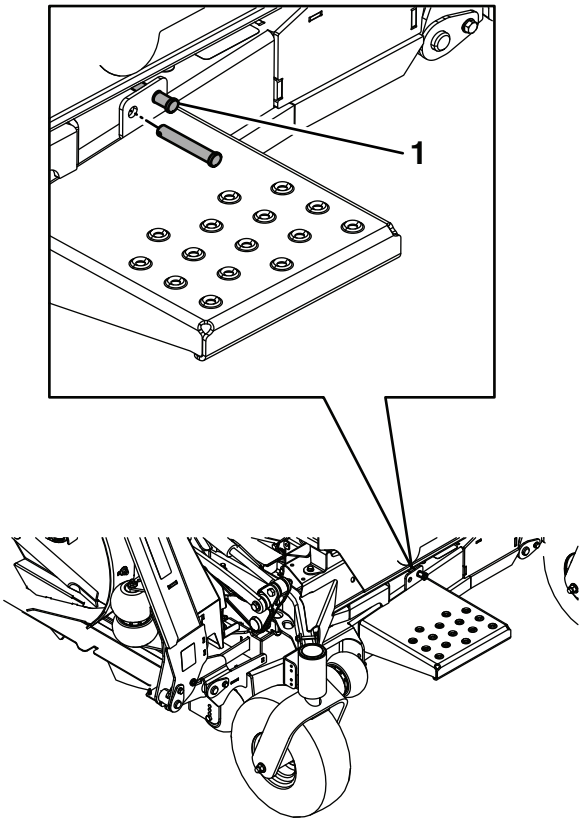

Figure 17

1. Pin storage location

2. Be sure that all persons are clear of the deck wings. Press and hold the bottom of the deck control switch; the center deck will lower first, then the outer wings.

Engaging the PTO

⚠ DANGER

The rotating blades under the mower deck are dangerous. Blade contact can cause serious injury or death.

Do Not put hands or feet under the mower or mower deck when the blades are engaged.

⚠ DANGER

An uncovered discharge opening will allow objects to be thrown in an operator's or bystander's direction. Also, contact with the blade could occur. Thrown objects or blade contact can cause serious injury or death.

Never operate the mower with the discharge deflector raised, removed, or altered unless there is a grass collection system or mulch kit in place and working properly.

The PTO push-pull switch engages the cutting blades. Be sure that all persons are clear of the mower deck and discharge area before engaging PTO.

Important: Operator must be in seat before the PTO can operate.

Important: 96 and 144 Inch Deck Only: Operator must be in seat and the outer deck wings need to be lowered into the mowing position before the PTO will engage.

To engage the PTO, pull the switch outward to engage the blades.

Note: The clutch saver feature allows the PTO to be engaged at any speed.

Disengaging the PTO

Push the PTO switch in to disengage the blades.

Stopping the Engine

1. Bring the unit to a full stop.
2. Move the motion control levers out to the neutral lock position.
3. Engage the parking brake.
4. Disengage the PTO.
5. Allow the engine to run for a minimum of 15 seconds, then turn the ignition switch to the "OFF" position to stop the engine.
6. Remove the key to prevent children or other unauthorized persons from starting engine.

Driving the Machine

⚠ CAUTION

Machine can spin very rapidly by positioning one lever too much ahead of the other. Operator may lose control of the machine, which may cause damage to the machine or injury.

- **Use caution when making turns.**
- **Slow the machine down before making sharp turns.**

Important: To begin movement (forward or backward) the operator must be in the seat, the brake lever must be disengaged (pushed down, except 144 inch deck models) before the motion control levers can be moved in or the engine will stop.

When the motion control levers are positioned fully outward (apart) in the T-slot, the drive system is in the neutral lock position (Figure 18).

Note: The "N" LCD indicator appears when both levers are in the neutral lock position.

When the motion control levers are moved directly inward (together) the drive system is in the neutral operate position.

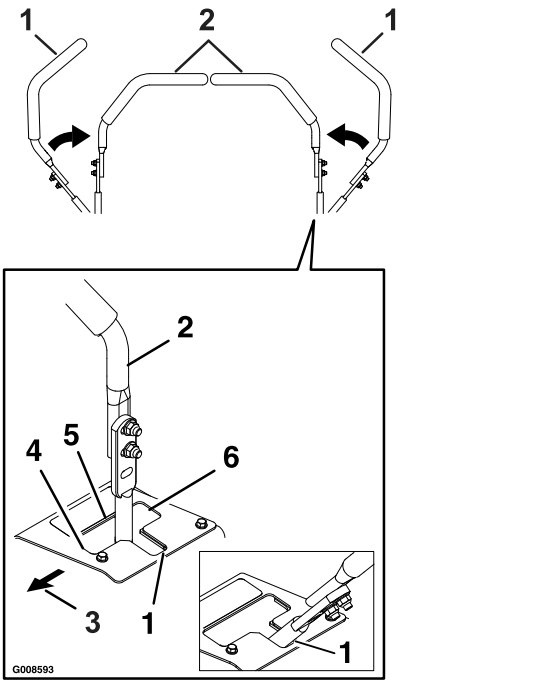

Figure 18

1. All Models Except 144 Inch Deck: Neutral lock position (handles out).
   144 Inch Deck Models: Neutral lock position and park brake (handles out).
2. Neutral operate position (handles in)
3. Front of Unit
4. Forward
5. Neutral (operate)
6. Reverse

Driving Forward

1. Release the parking brake.
2. Move the motion control levers inward to the center to the neutral position.
3. To move forward in a straight line, move both levers forward with equal pressure.

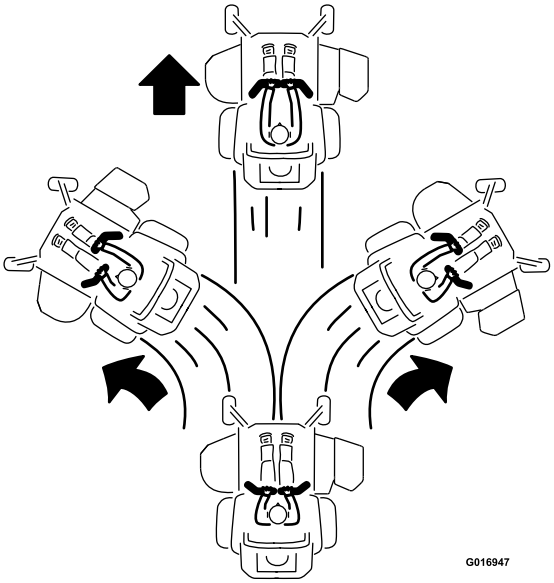

g016947

Figure 19

To turn left or right, pull the motion control lever back toward neutral in the desired turn direction.

The machine will move faster the farther the motion control levers are moved from the neutral position.

4. To stop, position both motion control levers in the neutral operate position.

Driving in Reverse

1. Move the motion control levers inward to the neutral operate position.
2. To move rearward in a straight line, move both levers rearward with equal pressure.

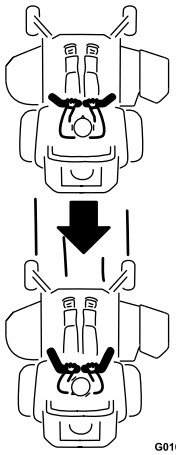

g016948

Figure 20

To turn right, release pressure on the RH motion control lever and the rear of the machine will move towards the rear and to the right.

To turn left, release pressure on the LH motion control lever and the rear of the machine will move towards the rear and to the left.

3. To stop, position both motion control levers in the neutral operate position.

Adjusting the Cutting Height– 60 and 72 Inch Decks

The cutting height of the mower deck is adjusted from 1 to 5 1/2 inches (2.54 cm to 14 cm) in 1/4 inch (6.4 mm) increments.

1. Stop the machine and move the motion control levers outward to the neutral locked position.
2. Disengage the PTO.

   Note: When changing the cutting height positions, always come to a complete stop and disengage the PTO.
3. Press the top of deck lift switch, on the panel control, to raise the deck. Push the bottom of the switch to lower the deck.
4. Insert the height adjustment pin into the hole corresponding to the desired cutting height.

   See the decal on the side of the deck lift plate for cut heights.

Adjusting the Cutting Height– 96 and 144 Inch Decks

The cutting height of the mower deck can be adjusted from 1 to 5 1/2 inches (2.54 cm to 14 cm) in 1/4 inch (6.4 mm) increments.

1. Position the mower on a flat surface.
2. Disengage the PTO.
3. Press the top of deck lift switch, on the panel control, to raise the center deck and the outer wings.
4. Stop engine, wait for all moving parts to stop and engage the parking brake.
5. Adjust the center deck:
   A. Remove the height adjustment pin from the deck lift plate on the right side of the center deck.

B. Insert the height adjustment pin into the hole corresponding to the desired cutting height.

See the decal on the side of the deck lift plate for cut heights.

6. Adjust the side wing decks:

A. Make sure the engine is off, the key has been removed, and the deck wings are locked in place.

B. Unlock the cam locks located on the height of cut channel on the wing deck (see Figure 21).

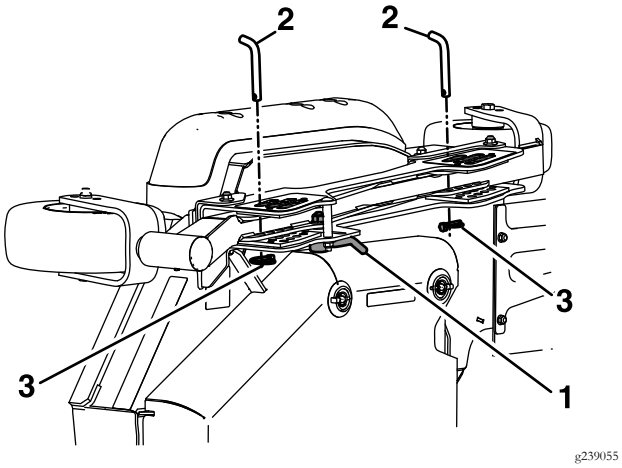

Figure 21

1. Unlock cam lock
2. Height of cut pin
3. Lynch pin

C. Remove the lynch pin from the height of cut pin on both the front and rear channels.

D. Move the wing deck to the appropriate height and reinstall the height of cut pins and lynch pins as shown in Figure 21.

E. Lock the cam lock.

F. Repeat for other wing deck.

7. If additional height of cut range is desired, adjust the front and rear gauge wheels on the wing deck:

A. Remove the mounting hardware from the gauge wheel.

B. Adjust the front and rear gauge wheels to the appropriate hole location (see the chart below and Figure 22) and reinstall the mounting hardware.

Hole Location	Height of Cut Range
Top hole (-1 on decal)	1–3.5 inches (25–89 mm)
Middle hole (0 on decal)	2–4.5 inches (51–114 mm)
Bottom hole (+1 on decal)	3–5.5 inches (76–140 mm)

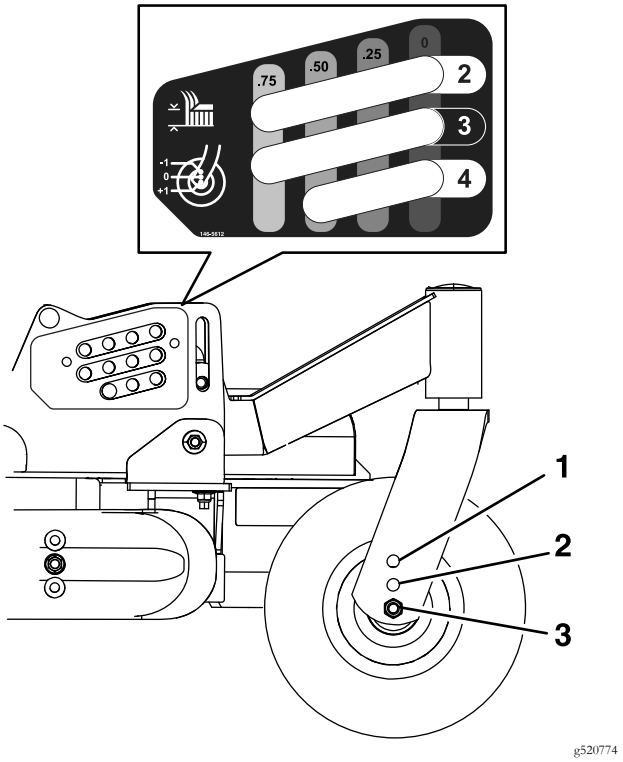

Figure 22
Height of Cut Range

1. Top hole (-1 on decal)
2. Middle hole (0 on decal)
3. Bottom hole (+1 on decal)

C. Repeat for other wing deck.

Adjusting the Anti-Scalp Rollers

It is recommended to change the anti-scalp roller position when the height of cut has changed.

1. Stop the machine and move the motion control levers outward to the neutral locked position.
2. Disengage the PTO.
3. Engage the park brake.
4. Stop the engine, remove the key and wait for all moving parts to stop.
5. After adjusting the height of cut, adjust the anti-scalp rollers by removing the mounting hardware.

6. Place the rollers in one of the positions shown (Figure 23). Rollers will maintain 3/4 inch (19 mm) clearance to the ground to minimize gouging and roller wear or damage.

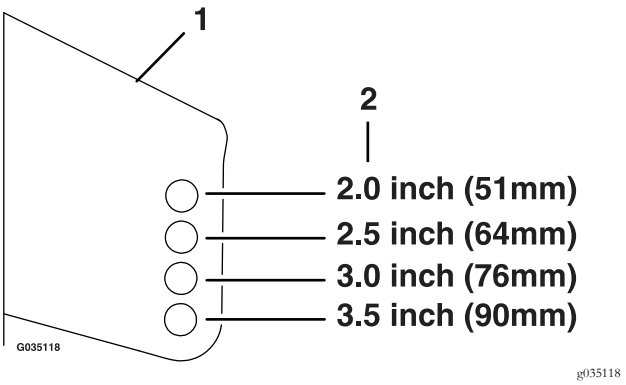

Figure 23

For cutting heights above 3.5 inches (90 mm) use the bottom hole. The rollers will still be effective against scalping.

1. Anti-scalp roller mounting bracket
2. Cutting height

For Maximum Deck Flotation, place the rollers one hole position lower. Rollers should maintain 1/4 inch (6.4 mm) clearance to the ground. **Do Not** adjust the rollers to support the deck.

7. Reinstall the mounting hardware:
   - Side Discharge Models:
     A. Be sure the roller bolts are installed with the spring disc washer between the head of the bolt and the mounting bracket (see Figure 24).
     B. Torque the 3/8 nyloc nut to 50–55 ft-lb (68-75 N-m).

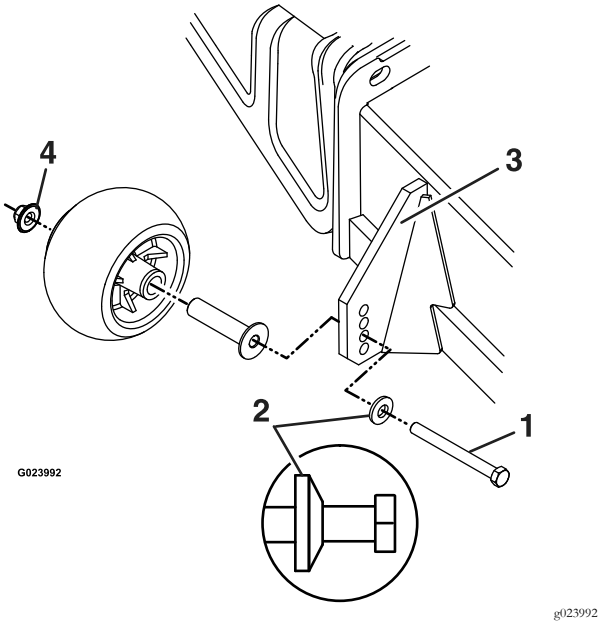

Figure 24

1. 3/8-16 X 3 3/4 Grade 8 bolt
2. Spring disc washer (cone towards bolt head)
3. Front right anti-scalp bracket shown
4. 3/8 nyloc-torque to 50-55 ft-lb (68-75 N-m)

   - Rear Discharge Models:

     Torque the 3/8 nyloc nut to 30-35 ft-lb (41-47 N-m) (see Figure 25).

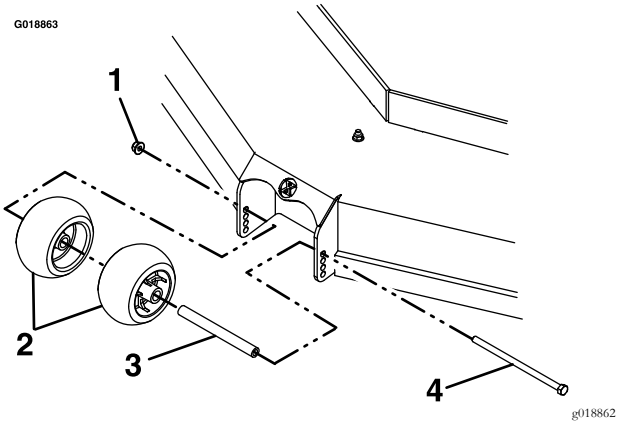

Figure 25

1. 3/8 nyloc-torque to 30-35 ft-lb (41-47 N-m)
2. Anti-scalp rollers
3. Spacer
4. Bolt

The 96 inch deck has 13 anti-scalp roller locations to adjust see Figure 26.

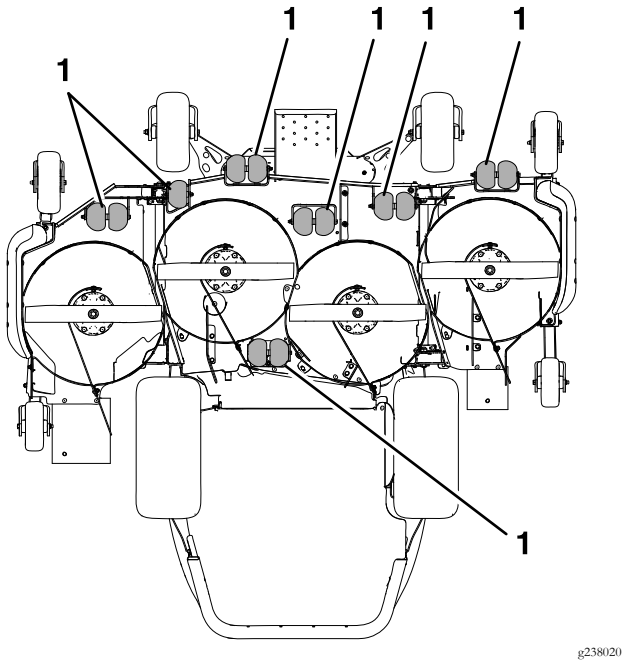

Figure 26
Underside of 96 Inch Deck

1. Anti-scalp roller

The 144 inch deck has 21 anti-scalp roller locations to adjust see Figure 27.

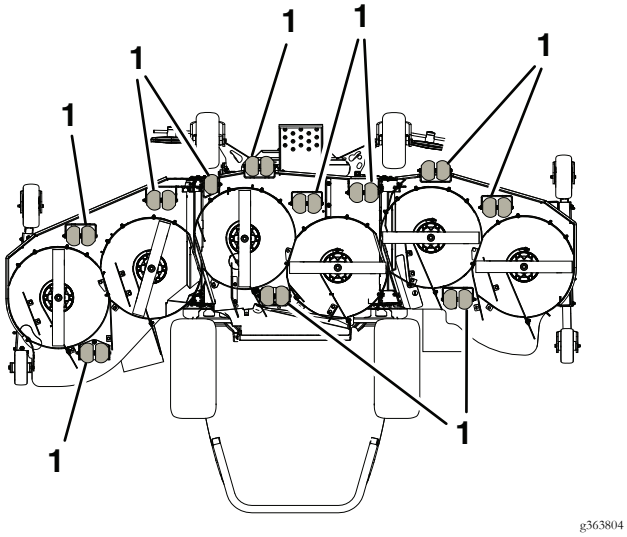

Figure 27
Underside of 144 Inch Deck

1. Anti-scalp roller

Adjusting the Side Bumpers (Rear Discharge Units Only Except 144 Inch Deck Models)

Mount the side bumpers in the top holes when operating in height of cuts higher than 2 1/2 inches (64 mm) and in the center holes when operating in height of cuts lower than 2 1/2 inches (64 mm).

Note: When bumpers become worn, switch the bumpers to the opposite sides of the mower, flipping them over. This allows the bumpers to be used longer before replacing them.

1. Stop the machine and move the motion control levers outward to the neutral locked position.
2. Disengage the PTO.
3. Engage the park brake.
4. Stop the engine, remove the key and wait for all moving parts to stop.
5. Raise the deck to the transport position.
6. Remove the bolts and nuts from each bumper.

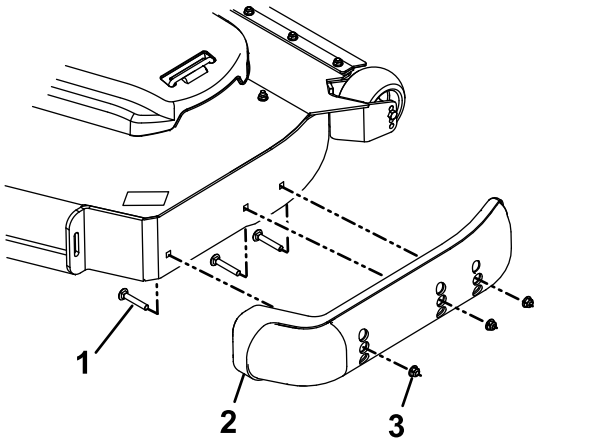

Figure 28

1. Bolt
2. Bumper
3. Nut

7. Move each bumper to the desired position and secure them with the bolts and nuts.

   Note: Only use the top or center sets of holes to adjust the bumpers. The bottom holes are used when switching sides, at which time they become the top holes on the other side of the mower.

After Operation

General Safety

- Park machine on level ground, disengage drives, set parking brake, stop engine, and remove key. Wait for all moving parts to stop before leaving the operator's position. Allow the machine to cool before servicing, adjusting, fueling, cleaning, or storing.
- Clean grass, leaves, excessive grease or oil, and other debris from the mower deck, muffler, drives, grass catcher, and engine area to help prevent fires.

Transporting

Transporting the Machine

Use a heavy-duty trailer or truck to transport the machine. Ensure that the trailer or truck has all necessary lighting and marking as required by law. Thoroughly read all of the safety instructions. Knowing this information could help you, your family, pets, or bystanders avoid injury.

To transport the machine:

- Lock the brake and block the wheels.
- Securely fasten the machine to the trailer or truck with straps, chains, cable, or ropes. Only use the designated tie-down locations on the mower (see Figure 29 and Figure 30). Use these locations even when transporting the mower with an attached accessory. Using non-designated locations may cause damage to the mower and/or attachment.

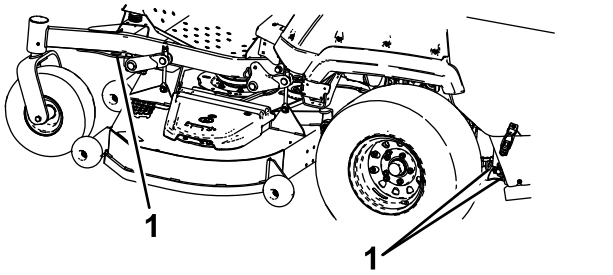

g225819

Figure 29

60 and 72 Inch Deck Models
(Six locations-three on left, three on right)

1. Tie-down location

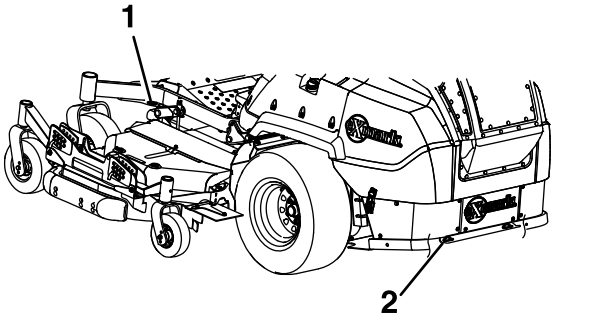

g337199

Figure 30

96 and 144 Inch Deck Models
(Four locations-two on left, two on right)

1. Front tie-down location
2. Rear tie-down location (rear bumper partially removed for clarity)

- On 96 and 144 inch decks, raise and lock the outer wing decks (see **Raising and Locking the Outer Wing Decks–96 and 144 Inch Deck Only** section.
- Secure a trailer to the towing vehicle with safety chains.

⚠ WARNING

Driving on the street or roadway without turn signals, lights, reflective markings, or a slow moving vehicle emblem is dangerous and can lead to accidents causing personal injury.

Do not drive machine on a public street or roadway.

Loading the Machine

Use extreme caution when loading or unloading machines onto a trailer or a truck. Use a full-width ramp that is wider than the machine for this procedure. Back up ramps and drive forward down ramps (Figure 31).

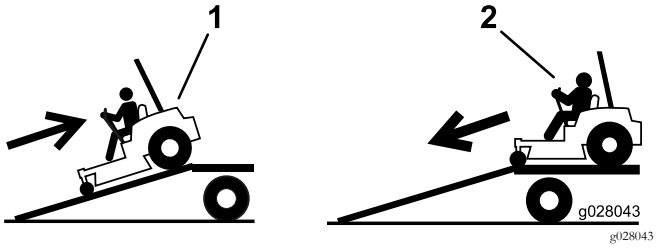

g028043

Figure 31

1. Back up ramps
2. Drive forward down ramps

Important: Do not use narrow individual ramps for each side of the machine.

Ensure the ramp is long enough so that the angle with the ground does not exceed 15 degrees (Figure 32). On flat ground, this requires a ramp to be at least four times (4X) as long as the height of the trailer or truck bed to the ground. A steeper angle may cause mower components to get caught as the unit moves from the ramp to the trailer or truck. Steeper angles may also cause the machine to tip or lose control. If loading on or near a slope, position the trailer or truck so that it is on the down side of the slope and the ramp extends up the slope. This will minimize the ramp angle.

⚠ WARNING

Loading a machine onto a trailer or truck increases the possibility of tip-over and could cause serious injury or death.

- **Use extreme caution when operating a machine on a ramp.**
- **Ensure that the ROPS is in the up position and use the seat belt when loading or unloading the machine. Ensure that the ROPS will clear the top of an enclosed trailer.**
- **Use only a full-width ramp; do not use individual ramps for each side of the machine.**
- **Do not exceed a 15-degree angle between the ramp and the ground or between the ramp and the trailer or truck.**
- **Ensure the length of ramp is at least four times (4X) as long as the height of the trailer or truck bed to the ground. This will ensure that ramp angle does not exceed 15 degrees on flat ground.**
- **Back up ramps and drive forward down ramps.**
- **Avoid sudden acceleration or deceleration while driving the machine on a ramp as this could cause a loss of control or a tip-over situation.**

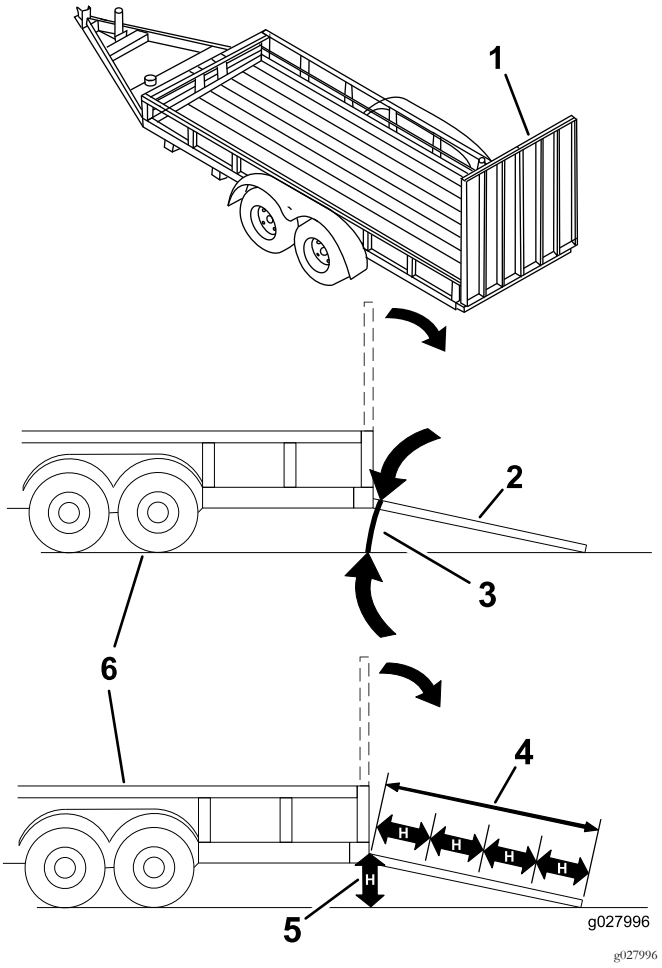

Figure 32

1. Full-width ramp in stowed position
2. Side view of full-width ramp in loading position
3. Not greater than 15 degrees
4. Ramp is at least four times (4X) as long as the height of the trailer or truck bed to the ground
5. H= height of the trailer or truck bed to the ground
6. Trailer

Towing Safety

- Do not attach towed equipment except at the hitch point.
- Follow the attachment manufacturer's recommendation for weight limits for towed equipment and towing on slopes. Towed weight must not exceed the weight of the machine, operator, and ballast; otherwise hydrostatic transmission failure may occur. Use counterweights or wheel weights as described in the attachment manufacturer's manual.
- Never allow children or others in or on towed equipment.
- On slopes, the weight of the towed equipment may cause loss of traction, increased risk of rollover, and loss of control. Reduce the towed weight and slow down.
- Stopping distance increases with the weight of the towed load. Travel slowly and allow extra distance to stop.
- Make wide turns to keep the attachment clear of the machine.

Maintenance

Note: Determine the left and right sides of the machine from the normal operating position.

Maintenance Safety

- Park machine on level ground, disengage drives, set parking brake, stop engine, and remove key. Wait for all moving parts to stop before leaving the operator's position. Allow the machine to cool before servicing, adjusting, fueling, cleaning, or storing.
- If you leave the key in the switch, someone could accidently start the engine and seriously injure you or other bystanders. Remove the key from the switch before you perform any maintenance.
- Never allow untrained personnel to service machine.
- Disconnect battery before making any repairs. Disconnect the negative terminal first and the positive last. Reconnect positive first and negative last.
- Keep all guards, shields, switches, and all safety devices in place and in proper working condition. Frequently check for worn or deteriorating components and replace them with genuine Exmark parts when necessary.

⚠ WARNING

Removal or modification of original equipment, parts and/or accessories may alter the warranty, controllability, and safety of the machine. Unauthorized modifications to the original equipment or failure to use original Exmark parts could lead to serious injury or death. Unauthorized changes to the machine, engine, fuel or venting system, may violate applicable safety standards such as: ANSI, OSHA and NFPA and/or government regulations such as EPA and CARB.

⚠ WARNING

Hydraulic fluid escaping under pressure can penetrate skin and cause injury. Fluid accidentally injected into the skin must be surgically removed within a few hours by a doctor familiar with this form of injury or gangrene may result.

- **If equipped, make sure all hydraulic fluid hoses and lines are in good condition and all hydraulic connections and fittings are tight before applying pressure to hydraulic system.**
- **Keep body and hands away from pinhole leaks or nozzles that eject high pressure hydraulic fluid.**
- **Use cardboard or paper, not your hands, to find hydraulic leaks.**
- **Safely relieve all pressure in the hydraulic system by placing the motion control levers in neutral and shutting off the engine before performing any work on the hydraulic system.**

⚠ WARNING

Fuel system components are under high pressure. The use of improper components can result in system failure, fuel leakage and possible explosion.

Use only approved fuel lines and fuel filters for high pressure systems.

- Use care when checking blades. Wrap the blade(s) or wear gloves, and use caution when servicing them. Only replace damaged blades. Never straighten or weld them.
- Do not rely solely on mechanical or hydraulic jacks for support. Use adequate jack stands.
- Carefully release pressure from components with stored energy

- Keep your hands and feet away from moving parts or hot surfaces. If possible, do not make adjustments with the engine running.
- Keep all parts in good working condition and all hardware tightened, especially the blade-attachment hardware.

Recommended Maintenance Schedule(s)

Maintenance Service Interval	Maintenance Procedure
After the first 50 hours	• Change the drive wheel gearbox oil (144 inch deck models only).
After the first 100 hours	• Check the wheel lug nuts. • Check the park brake adjustment.
After the first 200 hours	• Change the deck gearbox oil. • Change the engine oil and filter. • Change the hydraulic filter and fluid.
Before each use or daily	• Check the engine oil level. • Check the mower blades. • Check the safety interlock system. • Check the rollover protections systems (roll bar) knobs. • Check the seat belt. • Check for loose hardware. • Check hydraulic reservoir level. • Check fuel filter/water separator. Drain water if present. • Check engine coolant level. • Clean the engine and exhaust system area. • Clean the grass and debris build-up from the machine and cutting deck. • Clean the grass build-up from under the cutting deck.
Every 50 hours	• Check the deck gearbox oil. • Check the tire pressures. • Check the condition and tension of the alternator belts. • Check the condition of the belts. • Grease deck drive PTO. • Grease drive U-joints and splined slip joint. • Drain fuel filter/water separator. Drain water if present. • Clean the engine cooling system. • Clean the hood screen.
Every 200 hours	• Change the engine oil and filter if not using Exmark Premium Engine Oil but any oil meeting API CJ-4 or higher or as stated in the Specifications Section.
Every 400 hours	• Check wing deck bushings. • Replace the air cleaner elements. (May need more often under severe conditions. See the Engine Owner's Manual for additional information.) • Check the drive wheel gearbox oil (144 inch deck models only). • Grease idler pivot. • Grease caster wheel spindles. • Replace the fuel filter/water separator (more often in dirty or dusty conditions). • Change the deck gearbox oil. • Change the engine oil and filter if using Exmark Premium Engine Oil (API CK-4 or higher) (May need more often under severe conditions.) • Change the hydraulic filter and fluid if using Mobilfluid™ 424. • Check the park brake adjustment.

Maintenance Service Interval	Maintenance Procedure
Every 800 hours	• Change the wheel gearbox oil (144 inch deck models only). • Change the hydraulic filter and fluid if using Exmark Ruby Tran™ Fluid. • Inspect the engine valve clearance.
Every 2,000 hours	• Change engine coolant.
Monthly	• Check the battery charge.
Yearly	• Grease the front caster wheel hubs. • Change the engine oil and filter if operated less than 200 hours.

Periodic Maintenance

Engine Maintenance

Important: Refer to the Engine Owner's Manual for additional maintenance procedures.

Engine Safety

⚠ WARNING

The engine can become very hot, especially the muffler and exhaust components. Touching a hot engine can cause severe burns.

Allow the engine to cool completely before service or making repairs around the engine area.

Do Not change the engine governor setting or overspeed the engine.

Check Engine Oil Level

Service Interval: Before each use or daily

1. Stop engine and wait for all moving parts to stop. Make sure unit is on a level surface.
2. Check with engine cold.
3. Raise hood to gain access to dipstick.
4. Clean area around dipstick. Remove dipstick and wipe oil off. Reinsert the dipstick and push it all the way down into the tube. Remove the dipstick and read the oil level.
5. If the oil level is low, wipe off the area around the oil fill cap, remove cap and fill to the "FULL" mark on the dipstick. Exmark 4-Cycle Premium Engine Oil is recommended; refer to the Engine Owner's manual for an appropriate API rating and viscosity. **Do Not** overfill.

Important: Do Not operate the engine with the oil level below the "LOW" (or "ADD") mark on the dipstick, or over the "FULL" mark.

Check Battery Charge

Service Interval: Monthly

Allowing batteries to stand for an extended period of time without recharging them will result in reduced performance and service life. To preserve optimum battery performance and life, recharge batteries in storage when the open circuit voltage drops to 12.4 volts.

Note: To prevent damage due to freezing, battery should be fully charged before putting away for winter storage.

⚠ DANGER

Charging or jump starting the battery may produce explosive gases. Battery gases can explode causing serious injury.

- **Keep sparks, flames, or cigarettes away from battery.**
- **Ventilate when charging or using battery in an enclosed space.**
- **Make sure venting path of battery is always open once battery is filled with acid.**
- **Always shield eyes and face from battery.**

⚠ DANGER

Battery electrolyte contains sulfuric acid, which is poisonous and can cause severe burns. Swallowing electrolyte can be fatal or if it touches skin can cause severe burns.

- **Wear safety glasses to shield eyes, and rubber gloves to protect skin and clothing when handling electrolyte.**
- **Do Not swallow electrolyte.**
- **In the event of an accident, flush with water and call a doctor immediately.**

⚠ CAUTION

If the ignition is in the "ON" position there is potential for sparks and engagement of components. Sparks could cause an explosion or moving parts could accidentally engage causing personal injury.

Be sure ignition switch is in the "OFF" position before charging the battery.

Check the voltage of the battery with a digital voltmeter. Locate the voltage reading of the battery in the table and charge the battery for the recommended time interval to bring the charge up to a full charge of 12.6 volts or greater.

Important: Make sure the negative battery cable is disconnected and the battery charger used for charging the battery has an output of 16 volts and 7 amps or less to avoid damaging the battery (see chart for recommended charger settings).

Voltage Reading	Percent Charge	Maximum Charger Settings	Charging Interval
12.6 or greater	100%	16 volts/7 amps	No Charging Required
12.4 – 12.6	75–100%	16 volts/7 amps	30 Minutes
12.2 – 12.4	50–75%	16 volts/7 amps	1 Hour
12.0–12.2	25–50%	14.4 volts/4 amps	2 Hours
11.7–12.0	0–25%	14.4 volts/4 amps	3 Hours
11.7 or less	0%	14.4 volts/2 amps	6 Hours or More

Recommended Jump Starting Procedure

Service Interval: As required

1. Check the weak battery for terminal corrosion (white, green, or blue "snow"), it must be cleaned off prior to jump starting. Clean and tighten connections as necessary.

⚠ CAUTION

Corrosion or loose connections can cause unwanted electrical voltage spikes at anytime during the jump starting procedure.

Do Not attempt to jump start with loose or corroded battery terminals or damage to the engine may occur.

⚠ DANGER

Jump starting a weak battery that is cracked, frozen, has low electrolyte level, or an open/shorted battery cell, can cause an explosion resulting in serious personal injury.

Do Not jump start a weak battery if these conditions exist.

2. Make sure the booster is a good and fully charged lead acid battery at 12.6 volts or greater. Use properly sized jumper cables (4 to 6 AWG) with short lengths to reduce voltage drop between systems. Make sure the cables are color coded or labeled for the correct polarity.

⚠ CAUTION

Connecting the jumper cables incorrectly (wrong polarity) can immediately damage the electrical system.

Be certain of battery terminal polarity and jumper cable polarity when hooking up batteries.

Note: The following instructions are adapted from the SAE J1494 Rev. Dec. 2001 – Battery Booster Cables – Surface Vehicle Recommended Practice (SAE – Society of Automotive Engineers).

⚠ WARNING

Batteries contain acid and produce explosive gases.

- **Shield the eyes and face from the batteries at all times.**
- **Do Not lean over the batteries.**

Note: Be sure the vent caps are tight and level. Place a damp cloth, if available, over any vent caps on both batteries. Be sure the vehicles do not touch and that both electrical systems are off and at the same rated system voltage. These instructions are for negative ground systems only.

3. Connect the positive (+) cable to the positive (+) terminal of the discharged battery that is wired to the starter or solenoid as shown in Figure 33.

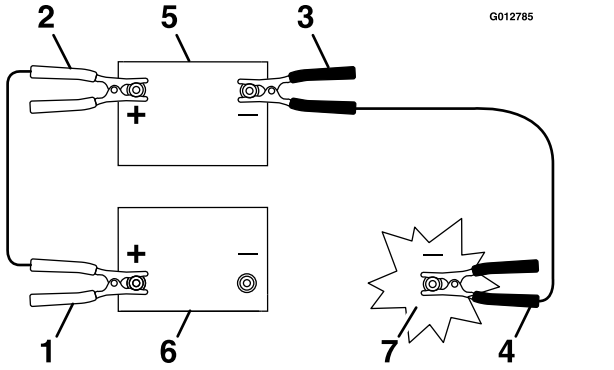

Figure 33

1. Positive (+) cable on discharged battery
2. Positive (+) cable on booster battery
3. Negative (–) cable on the booster battery
4. Negative (–) cable on the engine block
5. Booster battery
6. Discharged battery
7. Engine block

4. Connect the other end of the positive cable to the positive terminal of the booster battery.
5. Connect the black negative (–) cable to the other terminal (negative) of the booster battery.
6. MAKE THE FINAL CONNECTION ON THE ENGINE BLOCK OF THE STALLED VEHICLE (NOT TO THE NEGATIVE POST) AWAY FROM THE BATTERY. STAND BACK.
7. Start the vehicle and remove the cables in the reverse order of connection (the engine block (black) connection is the first to disconnect).

Check Mower Blades

Service Interval: Before each use or daily

1. Stop engine, wait for all moving parts to stop, and remove key. Engage parking brake.
2. Lift deck and secure in raised position as stated in the **Clean Grass Build-Up Under Deck** procedure.
3. Inspect blades and sharpen or replace as required.
4. Reinstall the blades (if they were removed) in the following order:

   A. Install bushing through blade with bushing flange on bottom (grass) side of blade.

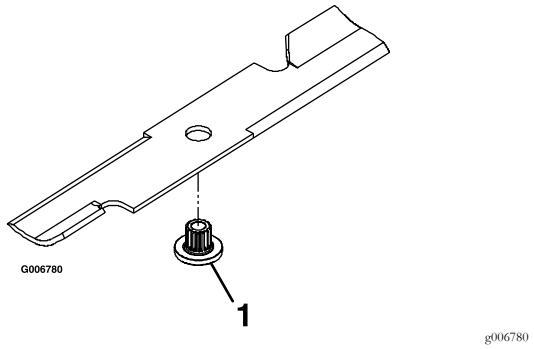

Figure 34

1. Install bushing in blade prior to installing bushing in spindle.

   B. Install bushing/blade assembly into spindle.

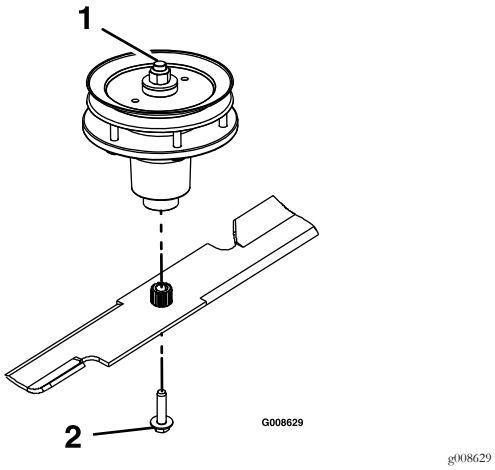

g008629

Figure 35

1. Use wrench here for blade installation. This nut has been torqued to 130-160 ft-lb (176-217 N-m)
2. Torque to 55-60 ft-lb (75-81 N-m) Apply lubricant to threads as needed to prevent seizing. Copper-based anti-seize preferable. Grease acceptable substitute.

C. Apply lubricant to threads of blade bolt as needed to prevent seizing. Copper-based anti-seize preferable. Grease acceptable substitute. Install blade bolt finger tight. Place wrench on the top spindle nut then torque the blade bolts to 55-60 ft-lb (75-81 N-m).

Important: On rear discharge decks, the RH blade rotates counterclockwise. Be sure to reinstall that blade onto the RH spindle only.

⚠ WARNING

Incorrect installation of the blade or components used to retain the blade can be dangerous. Failure to use all original components and assembled as shown could allow a blade or blade component to be thrown out from under the deck resulting in serious personal injury or death.

Always install the original Exmark blades, blade bushings, and blade bolts as shown.

Check Safety Interlock System

Service Interval: Before each use or daily

Important: It is essential that operator safety mechanisms be connected and in proper operating condition prior to use.

Note: If machine does not pass any of these tests, **Do Not** operate. Contact an Authorized Service Dealer.

Note: To prevent engine cut-outs on rough terrain, the seat has a 1/2 second time delay before the engine begins to shutdown.

Check the Normal Engine Starting Chart for All Except 144 Inch Deck Models

	System				
	Parking Brake	**PTO**	**Motion Control Levers**	**Operator**	**Outcome**
State of System	Engaged 	Disengaged (Blades) 	Both levers out (neutral lock) 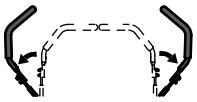	In seat or out of the seat 	Starter should crank 
	Engaged 	Up position, but blades disengaged* 	Both levers out (neutral lock) 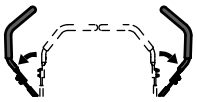	In seat or out of seat 	Starter should crank 

***Note:** The starter will crank with the PTO switch in the "ON" (pulled up) position; however, the system will disengage the PTO and a reset PTO error will occur. Engaging the PTO will require the operator to reset the PTO switch by turning it "OFF" (pushed down) and then turning it "ON".

Check the Normal Engine Starting Chart for 144 Inch Deck Models

	System			
	Motion Control Levers/Parking Brake	**PTO**	**Operator**	**Outcome**
State of System	Both Levers Out=Parking Brake Engaged 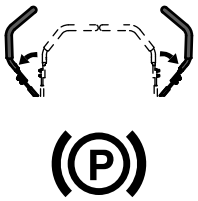	Disengaged (Blades) 	In seat or out of the seat 	Starter should crank 
	Both Levers Out=Parking Brake Engaged 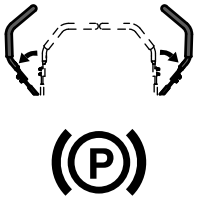	Up position, but blades disengaged* 	In seat or out of seat 	Starter should crank 

***Note:** The starter will crank with the PTO switch in the "ON" (pulled up) position; however, the system will disengage the PTO and a reset PTO error will occur. Engaging the PTO will require the operator to reset the PTO switch by turning it "OFF" (pushed down) and then turning it "ON".

Check Engine Starting Circuit Chart for All Except 144 Inch Deck Models

Note: In the **Check Engine Starting Circuit Chart**, the state of system item that is bold is being checked in each scenario.

	System				
	Parking Brake	**PTO (Blades)**	**Motion Control Levers**	**Operator**	**Outcome**
State of System	Engaged 	Disengaged 	**Both levers moved in.** **Right lever moved in.** **Left lever moved in.** 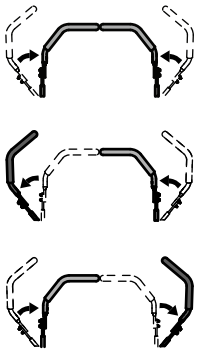	Operator in seat 	Starter must not crank 
	Disengaged 	Disengaged 	Both levers out (neutral lock) 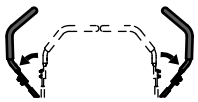	Operator in seat 	Starter must not crank 

Check Engine Starting Circuit Chart for 144 Inch Deck Models

Note: In the **Check Engine Starting Circuit Chart**, the state of system item that is bold is being checked in each scenario.

	System			
	Motion Control Levers/Parking Brake	**PTO (Blades)**	**Operator**	**Outcome**
State of System	**Both levers moved in. Right lever moved in. Left lever moved in =Parking Brake Disengaged** 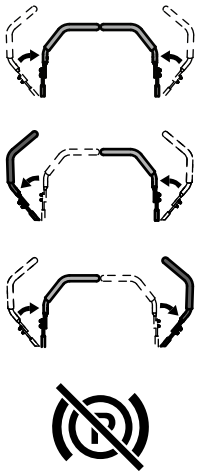	Disengaged 	Operator in seat 	Starter must not crank 

Check Shutdown Circuit Chart for All Except 144 Inch Deck Models

Note: The state of system item(s) that is bold is being checked in each scenario.

	System					
	Engine	**Parking Brake**	**PTO (Blades)**	**Motion Control Levers**	**Operator**	**Outcome**
State of System	Running idle (1/3 throttle or efficient mode)	**Disengaged**	Disengaged	**Both levers moved out (neutral lock). Both levers moved in. Right lever moved in. Left lever moved in.**	Raise off of seat (but don't get off)	Engine must begin shutdown within 1 second
				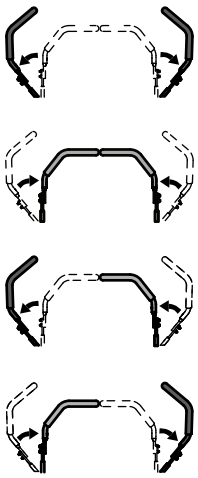		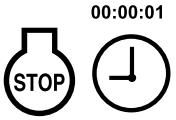
	Running idle (1/3 throttle or efficient mode)	**Disengaged**	Engaged	Both levers moved in	**Raise off of seat (but don't get off)**	Engine must begin shutdown within 1 second
				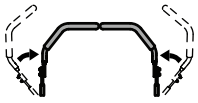		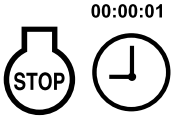

Check Shutdown Circuit Chart for All Except 144 Inch Deck Models-continued

	System					
	Engine	**Parking Brake**	**PTO (Blades)**	**Motion Control Levers**	**Operator**	**Outcome**
State of System	Running idle (1/3 throttle or efficient mode) 	**Engaged** 	Disengaged 	**Both levers moved in. Right lever moved in. Left lever moved in.** 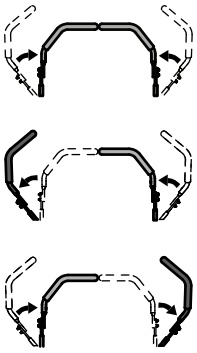	Operator in seat 	Engine must begin shutdown within 1 second 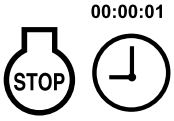
	Running idle (1/3 throttle or efficient mode) 	Engaged 	**Engaged** 	Both levers moved out (neutral lock) 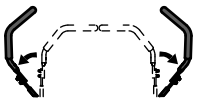	**Raise off of seat (but don't get off)** 	**PTO** must begin shutdown within 1 second; engine stays running. 
	Running idle (1/3 throttle or efficient mode) 	Disengaged 	**Engaged and Deck wings up** 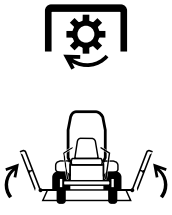	Both levers moved out (neutral lock) 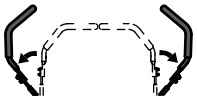	Operator in seat 	**PTO** must begin shutdown within 1 second; engine stays running. 

Check Shutdown Circuit Chart for 144 Inch Deck Models

Note: The state of system item(s) that is bold is being checked in each scenario.

	System				
	Engine	**Motion Control Levers/Parking Brake**	**PTO (Blades)**	**Operator**	**Outcome**
State of System	Running idle (1/3 throttle or efficient mode) 	**Both levers moved in. Right lever moved in. Left lever moved in =Parking Brake Disengaged** 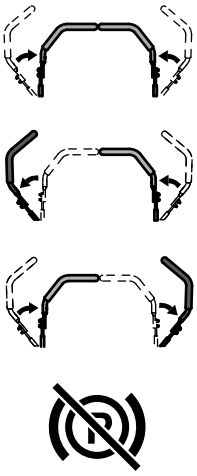	Disengaged 	**Raise off of seat (but don't get off)** 	Engine must begin shutdown within 1 second 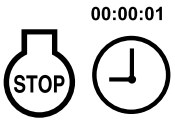
	Running idle (1/3 throttle or efficient mode) 	Both Levers Out=Parking Brake Engaged 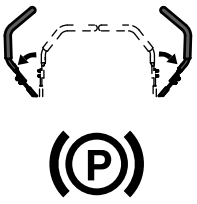	**Engaged** 	**Raise off of seat (but don't get off)** 	**PTO** must begin shutdown within 1 second; engine stays running. 

Check Shutdown Circuit Chart for 144 Inch Deck Models–Continued

	System				
	Engine	**Motion Control Levers/Parking Brake**	**PTO (Blades)**	**Operator**	**Outcome**
State of System	Running idle (1/3 throttle or efficient mode) 	Both levers moved in. Right lever moved in. Left lever moved in. =Parking Brake Disengaged 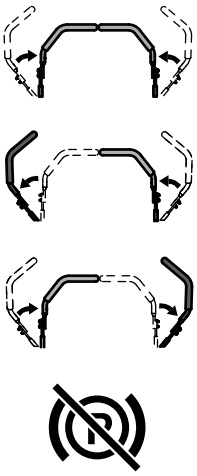	**Engaged and Deck wings up** 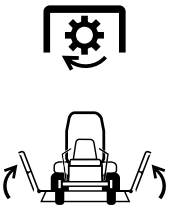	Operator in seat 	**PTO** must begin shutdown within 1 second; engine stays running. 

Check Rollover Protections Systems (Roll Bar) Knobs

Service Interval: Before each use or daily

Check that both the mounting hardware and the knobs are in good working condition. Make sure the knobs are fully engaged with the ROPS in the raised position. The upper hoop of the roll bar may need to be pushed forward or pulled rearward to get both knobs fully engaged.

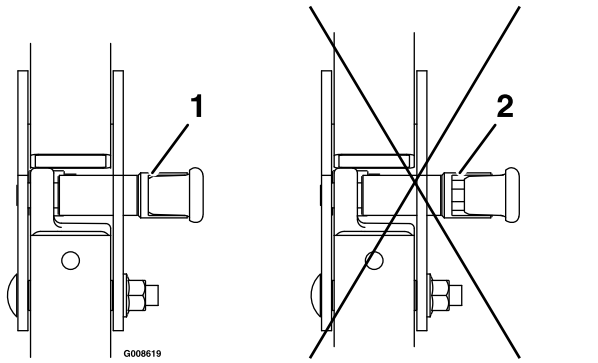

Figure 36

1. Engaged
2. Partially engaged — Do Not operate with ROPS in this condition.

Check Wing Deck Bushings

Service Interval: Every 400 hours

1. Position the machine on a flat surface.
2. Shut off the engine, wait for all moving parts to stop, and engage the parking brake.
3. Raise the center deck and fold the wings by pressing down at the rear of the deck lift rocker switch. Hold the switch down until both wings are completely folded.
4. Push on the front corners of the deck near the lower bushings. If the there is more than 1/8 inch (3 mm) of movement, then the bushings need to be replaced.

Change Wing Deck Pivot Bushings

Service Interval: As required

1. Position the mower on a flat surface.
2. Disengage the PTO and shut off the engine.
3. Remove and retain the clevis pins and hairpins from each wing deck storage location.
4. Be sure that all persons are clear of the deck wings. Press and hold the top of the deck control switch; the center deck will raise first and then the wings.
5. Secure each wing in the up position with the clevis pins and hairpins.
6. Loosen the bolts that secure the upper pivot pins to the deck but Do Not remove.

   For 144 Inch Deck Models Only: Remove and retain the large wing springs.

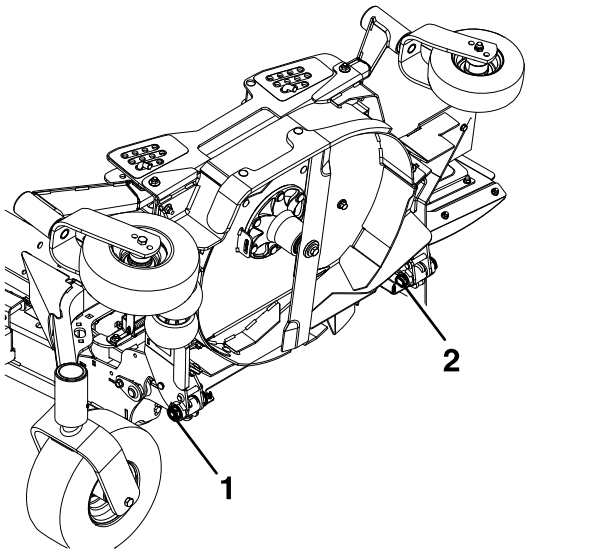

Figure 37

1. Front pivot pin
2. Rear pivot pin

7. Remove and retain the clevis pins and hairpins from each wing deck cylinder. Remove the height adjustment pin from the deck lift plate on the right side of the center deck.
8. Lower the wing decks, but Do Not draw them into the operating position.
9. Remove and retain the left and right wing belt shield lynch pins, belt shield, and the wing deck belts.
10. Remove and retain the locking cotter pins and the cylinder pins that attach to the rod end of the deck fold cylinders and to the wing decks.

Note: The wing decks must not be pulled into the operating position in order to remove the cylinder pins.

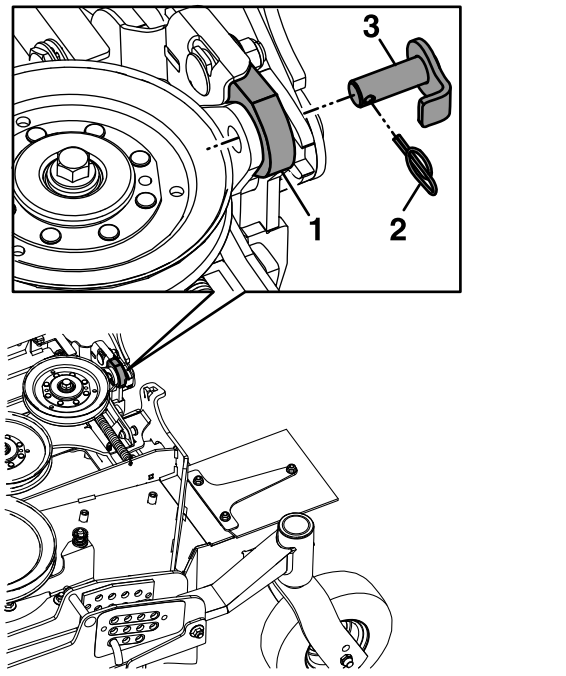

g350948

Figure 38

1. Cylinder rod end
2. Cotter pin
3. Cylinder pin

11. Remove and retain the bolts that secure the upper pivot pins to the deck and then remove the pivot pins.

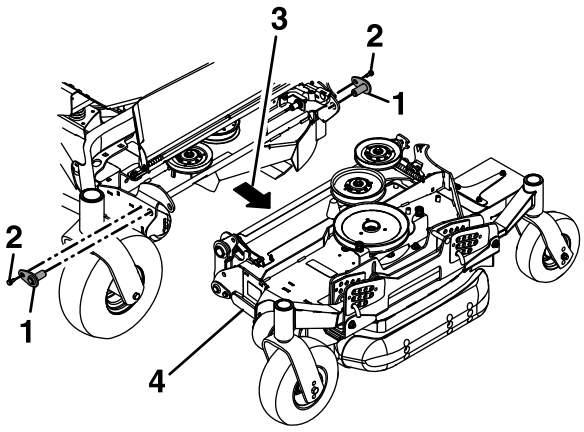

g351309

Figure 39

1. Upper pivot pins
2. Bolt
3. Pull outward
4. Left wing deck

12. Pull the wing deck outward to separate it from the center deck section.
13. Remove the flanged bushings from the upper pivot points and clean the bore.

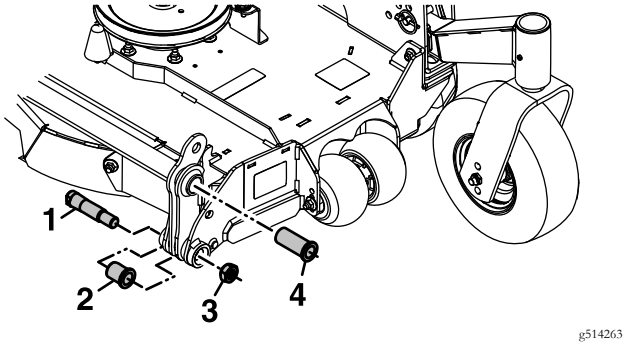

g514263

Figure 40

1. Pivot pin bolt
2. Lower flanged bushing
3. Lug nut
4. Upper flanged bushing

14. Apply a thin bead of Loctite® 680 to the entire circumference of the rear edge of the new bushings.
15. Insert and gently tap the new bushings into the opening and properly seat them into place.
16. Place a block of wood under the inside edge of the center deck to make it easier to work on the lower pivot point bushings.
17. Remove and retain the lower pivot point bolts (reference Figure 37 and Figure 40).
18. Remove and discard the flanged bushing from the front and rear of the wing deck and clean the bore.
19. Apply a thin bead of Loctite® 680 to the entire circumference of the rear edge of the new bushings.
20. Insert and gently tap the new bushings into the opening and properly seat them into place.
21. Reinstall the lower pivot point bolts into the lower deck pivot points with the new lug nut and torque to 75 ft-lb (120 N-m).
22. To aid in the ease of reinstalling the wing deck sections, carefully remove the exposed end of the spring that applies pressure to the rear of the wing deck cover.

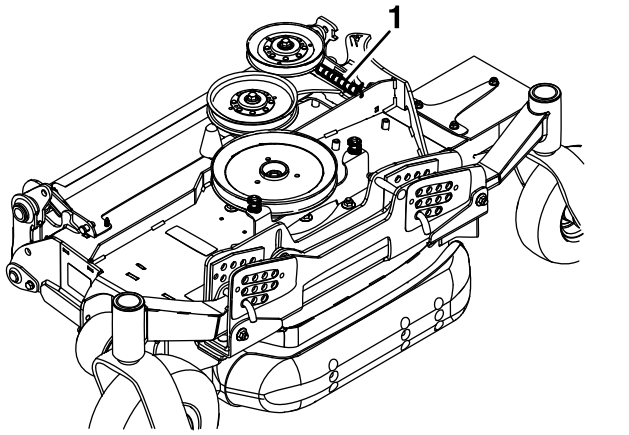

Figure 41

1. Spring

23. Push the left wing deck back to the center deck. Align and install the upper pivot deck pins in the front and rear of the deck and secure with the bolts that were removed previously (reference Figure 39).
24. Align the lift cylinder arm and reinstall the pin, making sure that the locking tab is aligned with the associated opening in the mount. Reinstall the locking cotter pin to secure.
25. Reattach the spring that was removed in Step 22 that applies pressure to the rear of the wing deck cover.
26. Reinstall the wing deck belts.
27. Reinstall the wing deck belt shields and secure with the lynch pins.
28. Raise the wings to the transport position and secure them in place with the clevis pins and hairpins.

    For 144 Inch Deck Models Only: Reinstall the large wing springs.
29. Reinstall the height of cut pin.

Check Seat Belt

Service Interval: Before each use or daily

Visually inspect seat belt for wear, cuts, and proper operation of retractor and buckle. Replace before operating if damaged.

Check for Loose Hardware

Service Interval: Before each use or daily

1. Stop engine, wait for all moving parts to stop, and remove key. Engage parking brake.
2. Visually inspect machine for any loose hardware or any other possible problem. Tighten hardware or correct the problem before operating.

Service Air Cleaner

Service Interval: Every 400 hours—Replace the air cleaner elements. (May need more often under severe conditions. See the Engine Owner's Manual for additional information.)

1. Stop engine, wait for all moving parts to stop, and remove key. Engage parking brake.
2. Unhook two air filter canister latches to gain access to the air cleaner element.
3. Remove air cleaner canister cover and remove outer element.
4. Check the condition of the paper element. Replace if dirty, bent or damaged.
5. Check the condition of the inner element. Replace whenever it appears dirty, typically every other time the paper element is replaced. Clean the base around the inner element before removing, so dirt does not get into the engine.
6. **Do Not** wash or use pressurized air to clean paper element or inner element.
7. Reinstall elements. Position the cover so that the rubber dust ejector is pointing downward and secure with retaining clips.

Check Deck Gearbox Oil

Service Interval: Every 50 hours

1. Position the machine and mower deck on a level surface.
2. Lower the mower deck to the 1 inch (2.5 cm) height of cut.
3. Disengage the PTO, move the motion-control levers to the neutral-lock position, and engage the parking brake.
4. Stop engine, wait for all moving parts to stop, and remove key.

5. Lift the footrest, exposing the top of the mower deck.
6. Remove the dipstick/fill plug from the top of the gearbox and make sure that the lubricant is between the marks on the dipstick (Figure 42).

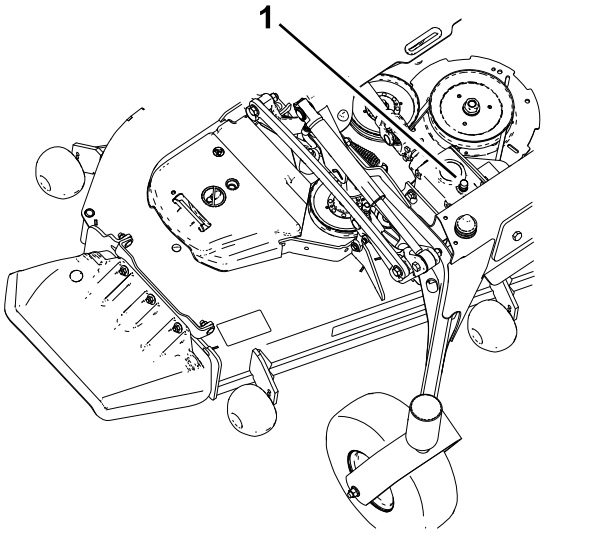

Figure 42

1. Fill plug and dipstick

7. If the lubricant level is low, add lubricant. Screw the dipstick all the way back in; remove and check if the lubricant level is between the marks on the dipstick.

   Important: Do not overfill the gearbox; overfilling the gearbox may damage it.

Check Drive Wheel Gearbox Oil– (144 Inch Deck Models Only)

Service Interval: Every 400 hours

1. Position the machine and mower deck on a level surface.
2. Stop engine and wait for all moving parts to stop. Engage parking brake.
3. Orient gearbox check plug to the right with fill port on the top (as shown in Figure 43).

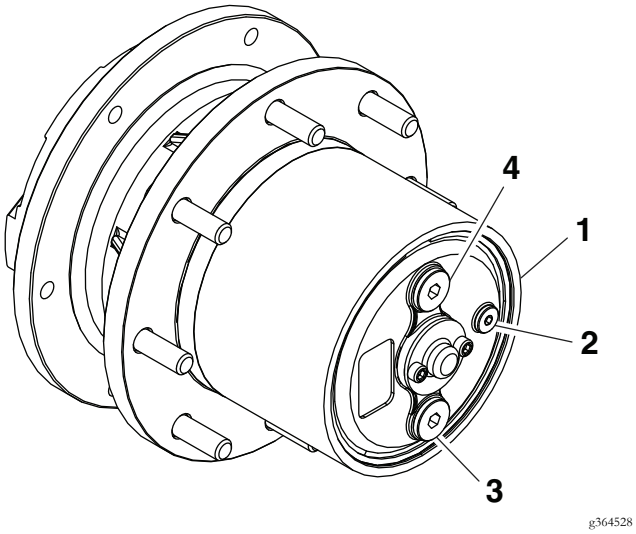

Figure 43

1. Wheel gear box
2. Check plug
3. Drain plug
4. Fill plug

4. Remove and retain check plug. Check oil level is up to check port. Reinstall check plug when complete.
5. Repeat on opposite side.

Important: Do not overfill the gearbox; overfilling the gearbox may damage it.

Check Hydraulic Fluid Level

Service Interval: Before each use or daily

1. Position the machine and mower deck on a level surface.
2. Stop engine and wait for all moving parts to stop. Engage parking brake.
3. Raise the deck to extend the lift cylinders, shut off the engine, and remove the key.
4. Raise the seat to access the hydraulic fluid tank.
5. Remove the hydraulic fill cap from the filler neck.
6. Remove the dipstick and wipe it with a clean rag.
7. Place the dipstick into the filler neck; then remove it and check the level of fluid.

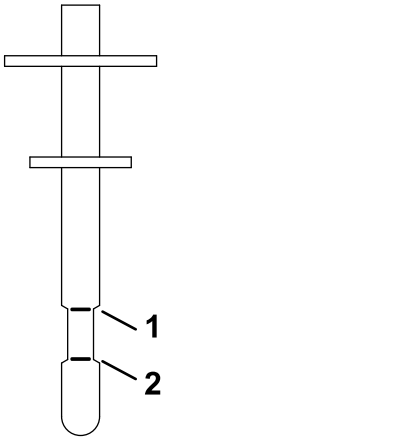

Figure 44

1. Full
2. Add

If fluid is needed add enough oil to put the level in between the two marks on the dipstick.

Important: Do Not overfill.

8. Replace the dipstick and fill cap; finger-tighten only.
9. Check all hoses and fittings for leaks.

Check Tire Pressures

Service Interval: Every 50 hours

1. Stop engine, wait for all moving parts to stop, and remove key. Engage parking brake.
2. Check tire pressure in drive tires.
3. Inflate drive tires to:
   - 18 psi (124 kPa) for 60 and 72 inch deck models.
   - 22 psi (152 kPa) for 96 and 144 inch deck models.
4. Semi-pneumatic caster tires do not need to be inflated.

Note: Do Not add any type of tire liner or foam fill material to the tires. Excessive loads created by foam filled tires may cause failures to the hydro drive system, frame, and other components. Foam filling tires will void the warranty.

Check Condition Of Belts

Service Interval: Every 50 hours

1. Stop engine, wait for all moving parts to stop, and remove key. Engage parking brake.
2. Remove left and right belt shields on deck and lift up floor pan to inspect belts.

Lubricate Grease Fittings

Note: See chart for service intervals.

1. Stop engine, wait for all moving parts to stop, and remove key. Engage parking brake.
2. Lubricate fittings with one to two pumps of NLGI grade #2 multi-purpose gun grease.

   Refer to the following chart for fitting locations and lubrication schedule.

60 and 72 Inch Models

Lubrication Chart			
Fitting Locations	**Initial Pumps**	**Number of Places**	**Service Interval**
1. Deck drive PTO	1	3	50 hrs
2. Deck idler pivot	1	1	Every 400 hrs or Yearly
3. Caster wheel bearings	*0	2	*Yearly
4. Caster pivots	*0	2	Every 400 hrs or Yearly

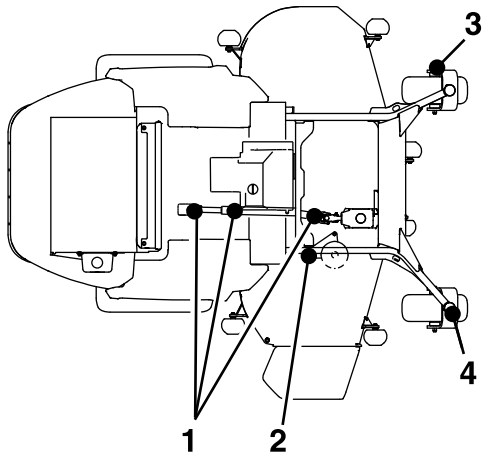

96 and 144 Inch Model

Lubrication Chart			
Fitting Locations	**Initial Pumps**	**Number of Places**	**Service Interval**
1. Deck drive PTO	1	3	50 hrs
2. Deck idler pivot	1	3	Every 400 hrs or Yearly
3. Caster wheel bearings	*0	4	*Yearly
4. Caster pivots	*0	5	Every 400 hrs or Yearly

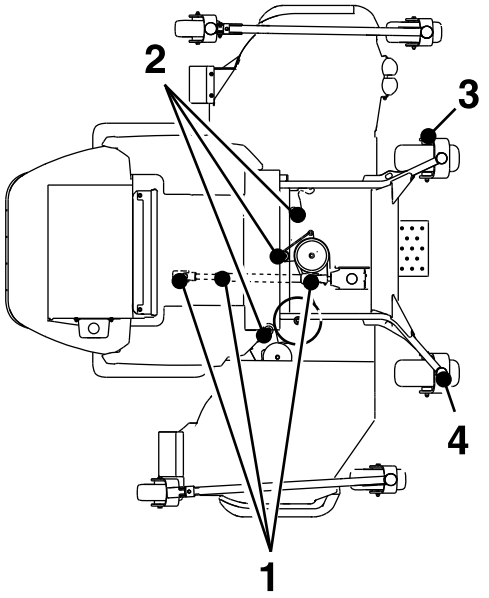

* See step 3 for special lubrication instructions on the front caster pivots and the **Lubricate Caster Wheel Hubs** section for special lubrication instructions on the front casters wheel hubs.

3. Lubricate front caster pivots once a year. Remove hex plug and cap. Thread grease zerk in hole and pump with grease until it oozes out around top bearing. Remove grease zerk and thread plug back in. Place cap back on.

Check Wheel Lug Nuts

Service Interval: After the first 100 hours

1. Stop engine, wait for all moving parts to stop, and remove key. Engage parking brake.
2. Torque to 85-105 ft-lb (115-142 N-m).

Lubricate Caster Wheel Hubs

Service Interval: As required

1. Stop engine, wait for all moving parts to stop, and remove key. Engage parking brake.

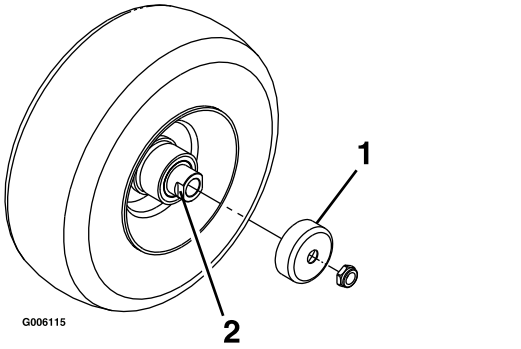

g006115

Figure 45

1. Seal guard
2. Spacer nut with wrench flats

2. Remove caster wheel from caster forks.
3. Remove seal guards from the wheel hub.
4. Remove one of the spacer nuts from the axle assembly in the caster wheel. Note that thread locking adhesive has been applied to lock the spacer nuts to the axle. Remove the axle (with the other spacer nut still assembled to it) from the wheel assembly.
5. Pry out seals, and inspect bearings for wear or damage and replace if necessary.
6. Pack the bearings with a NLGI grade #1 multi-purpose grease.
7. Insert one bearing, one new seal into the wheel.

   Note: Seals (Exmark P/N 103-0063) must be replaced.
8. If the axle assembly has had both spacer nuts removed (or broken loose), apply a thread locking adhesive to one spacer nut and thread onto the axle with the wrench flats facing outward. Do Not thread spacer nut all of the way onto the end of the axle. Leave approximately 1/8 inch (3 mm) from the outer surface of the spacer nut to the end of the axle inside the nut.
9. Insert the assembled nut and axle into the wheel on the side of the wheel with the new seal and bearing.
10. With the open end of the wheel facing up, fill the area inside the wheel around the axle full of NLGI grade #1 multi-purpose grease.
11. Insert the second bearing and new seal into the wheel.
12. Apply a thread locking adhesive to the 2nd spacer nut and thread onto the axle with the wrench flats facing outward.
13. Torque the nut to 75-80 in-lb (8-9 N-m), loosen, then re-torque to 20-25 in-lb (2-3 N-m). Make sure axle does not extend beyond either nut.
14. Reinstall the seal guards over the wheel hub and insert wheel into caster fork. Reinstall caster bolt and tighten nut fully.

Important: To prevent seal and bearing damage, check the bearing adjustment often. Spin the caster tire. The tire should not spin freely (more than 1 or 2 revolutions) or have any side play. If the wheel spins freely, adjust torque on spacer nut until there is a slight amount of drag. Reapply thread locking adhesive.

Drain Fuel Filter/Water Separator

Service Interval: Before each use or daily
Every 50 hours

1. Stop engine, wait for all moving parts to stop, and remove key. Engage parking brake.
2. Place a drain pan under the fuel filter and loosen the drain plug approximately 1 turn.

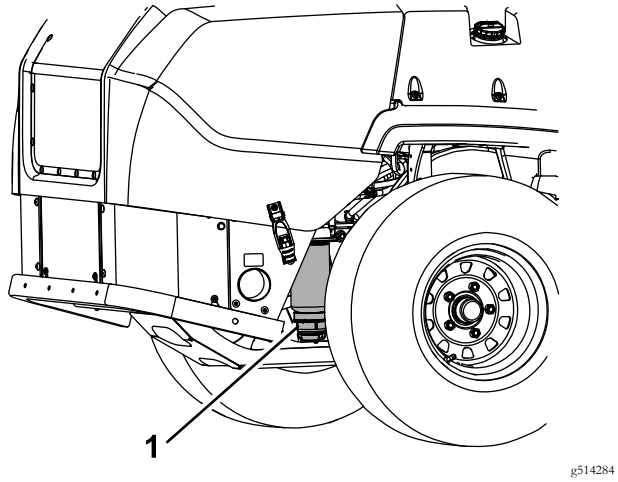

Figure 46

1. Filter

3. Water should drain.
4. When fuel begins to flow from the filter, tighten the drain plug.

Important: Water or other contaminants in fuel can severely damage fuel pump and/or the other engine components.

Change Fuel Filter/Water Separator

Service Interval: Every 400 hours/Yearly (whichever comes first) (more often in dirty or dusty conditions).

⚠ DANGER

Use of improper components can result in system failure, fuel leakage and possible explosion.

- **Ensure that an Authorized Service Dealer replace the fuel filter and any components for the fuel system.**
- **Use only approved fuel lines, hose clamps and fuel filters for high pressure systems.**

1. Stop engine, wait for all moving parts to stop, and remove key. Engage parking brake.
2. Place a drain pan under the fuel filter and loosen the drain plug approximately 1 turn.
3. Fuel should drain.
4. Clean around filter and unscrew it to remove.
5. Separate and retain the water separator bowl from the filter.
6. Install the water separator bowl onto the new filter. Apply a thin coating of Exmark 4-Cycle Premium Engine Oil on the surface of the rubber seal. Turn filter clockwise until rubber seal contacts the separator head then tighten filter an additional 3/4 turn.

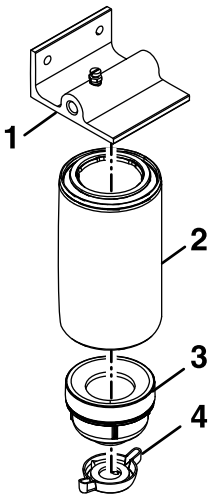

Figure 47

1. Separator head
2. Filter
3. Water separator bowl
4. Drain plug

7. Reinstall the drain plug.

The 3TNV88C and 3TNV86CT engines have two fuel filters; see Figure 48 for locations.

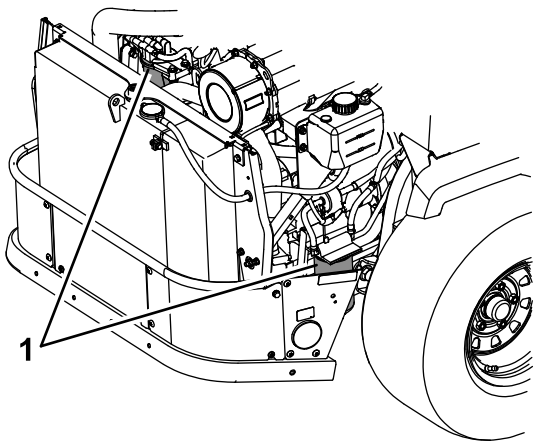

Figure 48

1. Location

Change Deck Gearbox Oil

Service Interval: After the first 200 hours

Every 400 hours thereafter.

1. Position the machine and cutting unit on a level surface.
2. Lower the mower deck to the 1 inch (2.5 cm) height of cut.
3. Disengage the PTO, move the motion control levers to the neutral-lock position, and engage the parking brake.
4. Shut off the engine, remove the key, and wait for all moving parts to stop before leaving the operating position.
5. Lift the footrest, exposing the top of the mower deck.
6. Remove the dipstick/fill plug from the top of the gearbox (reference Figure 42).
7. Extract oil through the fill port using a vacuum devise or remove the gearbox from the deck and pour the oil out.
8. Reinstall the gearbox if it was removed to drain.
9. Add enough lubricant, approximately 14 oz (420 ml), until the level is between the marks on the dipstick.

Important: Do Not overfill the gearbox; overfilling the gearbox may damage it.

Change Engine Oil and Filter

Service Interval: After the first 200 hours

Every 400 hours—Change the engine oil and filter if using Exmark Premium Engine Oil (API CK-4 or higher) (May need more often under severe conditions.)

Every 200 hours— Change the engine oil and filter if not using Exmark Premium Engine Oil but any oil meeting API CJ-4 or higher or as stated in the Specifications Section.

Yearly if operated less than 200 hours.

1. Stop engine, wait for all moving parts to stop, and remove key. Engage parking brake.
2. Drain oil while engine is warm from operation.
3. Place pan under machine to catch oil. Remove the oil drain plug. Allow oil to drain and replace oil drain plug.
4. Replace the oil filter every oil change. Clean around oil filter and unscrew filter to remove. Before reinstalling new filter, apply a thin coating of Exmark 4-Cycle Premium Engine Oil on the surface of the rubber seal. Turn filter clockwise until rubber seal contacts the filter adapter then tighten filter an additional 1 full turn.
5. Unlatch the hood and lift it up to access oil fill. Clean around oil fill cap and remove cap. Fill to specified capacity and replace cap. Use oil recommended in the **Check Engine Oil Level** section. **Do Not** overfill. Start the engine and check for leaks.
6. Start the engine at idle for 5 minutes. Stop engine and wait three minutes, then check the oil level. If required, add oil to bring level to the "FULL" mark on the dipstick. **Do Not** overfill.
7. Check for leaks, including around the oil filter.
8. Wipe up any spilled oil.

Change Drive Wheel Gearbox Oil–144 Inch Deck Models Only

Service Interval: After the first 50 hours

Every 800 hours

1. Position the machine and mower deck on a level surface.
2. Stop engine and wait for all moving parts to stop. Engage parking brake.
3. Raise the rear of machine up and support with jack stands (or equivalent support) just high enough to allow drive wheels to turn freely once the motor brake is released.
4. Remove wheel and orient gearbox with drain port on the bottom with fill port on the top.

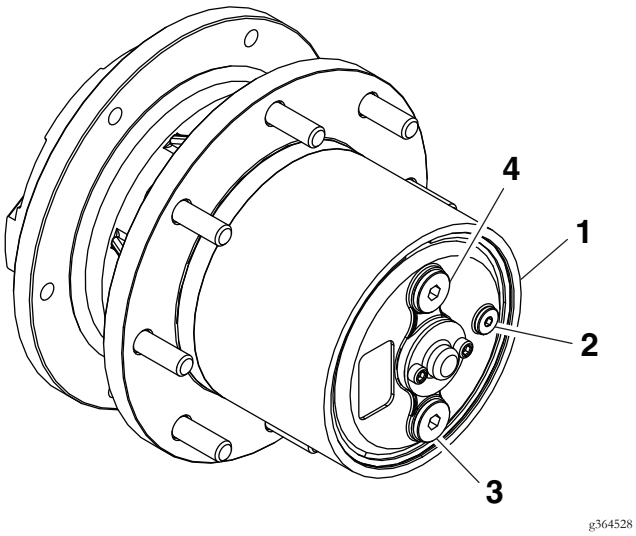

Figure 49

1. Wheel gear box
2. Check plug
3. Drain plug
4. Fill plug

5. Place a pan under each drain port. Remove, retain, and wipe clean the drain plug, check plug, and fill plug to allow the fluid drain.
6. Reinstall the drain plug and add oil (approximately 18 oz) until it runs out the check port. Install check plug and fill plug back in their respective ports.
7. Repeat on opposite side.

Important: Do Not overfill the gearbox; overfilling the gearbox may damage it.

Change Hydraulic System Filter and Fluid

Service Interval: After the first 200 hours—Change the hydraulic filter and fluid.

Every 400 hours—Change the hydraulic filter and fluid if using Mobilfluid™ 424.

Every 800 hours—Change the hydraulic filter and fluid if using Exmark Ruby Tran™ Fluid.

60, 72, and 96 Inch Models

Hydro Oil	Change Interval
Exmark Ruby Transmission Fluid.	After first 200 hours *Every 800 hours thereafter
Mobilfluid 424	After first 200 hours *Every 400 hours thereafter

*May need more often under severe conditions.

Note: Exmark Ruby Transmission Fluid is recommended. Refer to the chart for an acceptable alternative.

1. Stop engine, wait for all moving parts to stop, and remove key. Engage parking brake.
2. Raise seat.
3. There are four drain plugs that need to be removed to do a complete fluid change. Place a pan under each drain plug from the following components: hydraulic reservoir, transmission case, and the left and right wheel motors (see Figure 50).

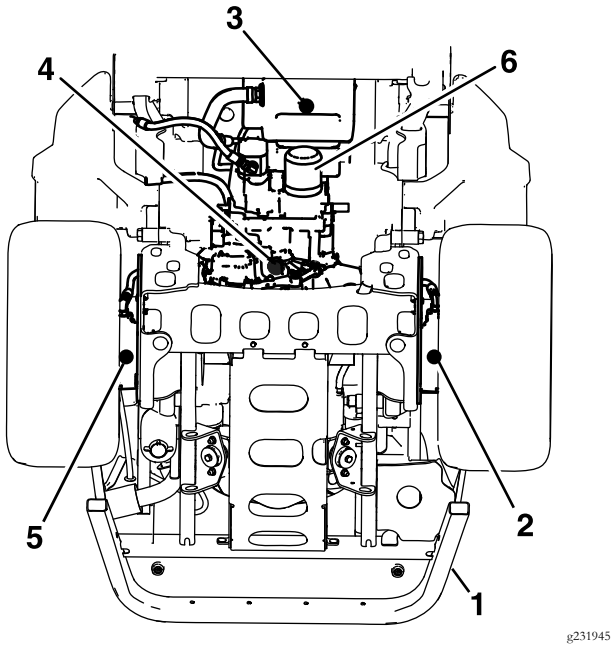

Figure 50

Underside of 60, 72 and 96 Inch Deck Models

1. Rear frame
2. LH wheel motor drain plug
3. Hydraulic reservoir drain plug
4. Transmission case drain plug
5. RH wheel motor drain plug
6. Filter

4. Unscrew the filter to remove and allow fluid to drain from reservoir.

   Important: Before reinstalling new filter, apply a thin coat of Exmark Ruby Transmission Fluid on the surface of the rubber seal.

   Install a new filter and turn the filter clockwise until the rubber seal contacts the filter adapter, then tighten the filter an additional 2/3 to 3/4 turn.

5. Reinstall all four plugs. The wheel motor drain plugs are magnetic; wipe clean before reinstalling.

6. Remove the fill port plug on the top of each wheel motor.

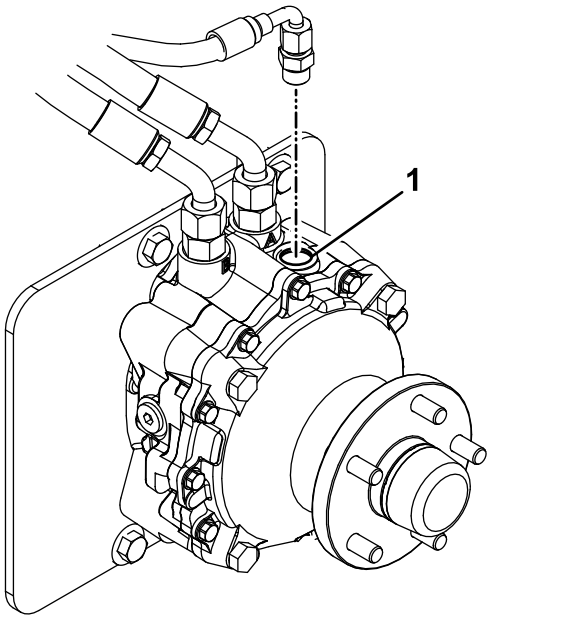

Figure 51

1. Fill port

A. Fill each motor with approximately 1.5 qt (1.4 L) Exmark Ruby Transmission Fluid.

B. Replace the plugs.

C. Remove the reservoir cap and dipstick from the fluid tank.

D. Add 8 qt (7.6 L) of oil in the reservoir.

   Note: The reservoir will be overfull at this point the level will quickly go down once the machine is started and cooling loop oil fills the transmission case.

Important: Exmark will not assume responsibility for damage caused by improper substitutions.

7. Raise the rear of machine up and support with jack stands (or equivalent support) just high enough to allow drive wheels to turn freely.

8. Allow the engine to run about one minute and then shut it off.

9. Start the engine and check for oil leaks. Move the speed control levers to the full speed and run for several minutes. Shut down machine and recheck fluid level.

10. Check the level of the hydraulic fluid; refer to **Check Hydraulic Fluid Level** section.

    Add enough oil to put the level between the two marks on the dipstick. it may take 4-5 qt (3.8-4.7

L) depending how much oil stayed in the cooling loop while draining.

11. Replace the dipstick and reinstall the cap.

144 Inch Models

Hydro Oil	Change Interval
Exmark Ruby Tran Fluid.	After first 200 hours *Every 800 hours thereafter
Mobilfluid 424	After first 200 hours *Every 400 hours thereafter

*May need more often under severe conditions.

Note: Exmark Ruby Transmission Fluid is recommended. Refer to the chart for an acceptable alternative.

1. Stop engine, wait for all moving parts to stop, and remove key. Engage parking brake.
2. Raise seat.
3. There are two drain plugs that need to be removed to do a complete fluid change. Place a pan under each drain plug from the following components: hydraulic reservoir, and transmission case (see Figure 52).

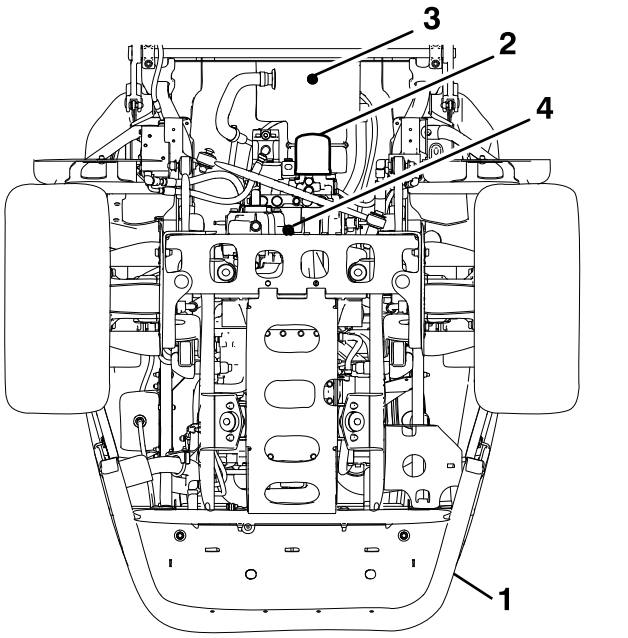

Figure 52
Underside of 144 Inch Deck Model

1. Rear frame
2. Filter
3. Hydraulic reservoir drain plug
4. Transmission case drain plug

4. Unscrew the filter to remove and allow fluid to drain from reservoir.

   Important: Before reinstalling new filter, apply a thin coat of Exmark Ruby Transmission Fluid on the surface of the rubber seal.

   Install a new filter and turn the filter clockwise until the rubber seal contacts the filter adapter, then tighten the filter an additional 2/3 to 3/4 turn.

5. Reinstall all plugs. Wipe clean before reinstalling.
6. Raise the rear of machine up and support with jack stands (or equivalent support) just high enough to allow drive wheels to turn freely.
   A. Remove the reservoir cap and dipstick from the fluid tank.
   B. Add 8 qt (7.6 L) of oil in the reservoir.

   The reservoir will be overfull at this point the level will quickly go down once the machine is started and cooling loop oil fills the transmission case.
7. Allow the engine to run about one minute and then shut it off.

8. Start the engine and check for oil leaks. Move the speed control levers to the full speed and run for several minutes. Shut down machine and recheck fluid level.
9. Check the level of the hydraulic fluid; refer to **Check Hydraulic Fluid Level** section.

   Add enough oil to put the level between the two marks on the dipstick. it may take 4-5 qt (3.8-4.7 L) depending how much oil stayed in the cooling loop while draining.
10. Replace the dipstick and reinstall the cap.

Check Engine Coolant Level

Service Interval: Before each use or daily

Note: If the engine coolant level is below the indicator line on the overflow bottle when the engine is cold, the coolant temperature gauge may not register correctly during operation and/or the warning buzzer may not sound if the engine overheats.

1. Position the mower on a flat surface.
2. Stop engine and wait for all moving parts to stop.
3. Check with engine cold.
4. Open the hood and check the coolant level in the expansion tank on the right side of the machine. The coolant level should be between the marks on the overflow bottle.

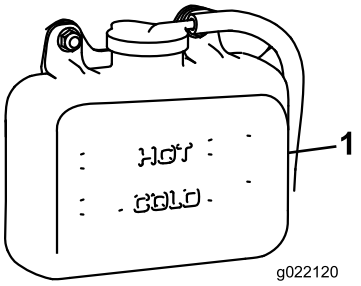

g022120

Figure 53

1. Expansion tank

5. If the coolant level is low, remove the cap to the overflow bottle and fill to the indicator line. Machines should only be filled a 50/50 mix of water and ethylene glycol.

   Note: The use of Havoline® Xtended Life coolant is recommended. Havoline® can be identified by its orange color.

⚠ WARNING

Engine coolant is hot and pressurized and radiator and surrounding parts are hot. Spray or steam from hot, pressurized liquid in the engine cooling system and touching a hot radiator may cause severe burns.

Allow the engine to cool completely before removing the radiator cap or servicing any component of the cooling system.

⚠ CAUTION

Engine coolant is toxic. Swallowing coolant can cause poisoning.

- **Do Not swallow.**
- **Keep out of reach of children and pets.**

Change Engine Coolant

Service Interval: Every 2,000 hours/Every 2 years (whichever comes first)

1. Position the mower on a flat surface.
2. Stop engine, wait for all moving parts to stop, and remove key. Engage parking brake.
3. Tilt hood forward to gain access to the cooling area.

⚠ WARNING

Engine coolant is hot and pressurized and radiator and surrounding parts are hot. Spray or steam from hot, pressurized liquid in the engine cooling system and touching a hot radiator may cause severe burns.

Allow the engine to cool completely before removing the radiator cap or servicing any component of the cooling system.

⚠ CAUTION

Engine coolant is toxic. Swallowing coolant can cause poisoning.

- **Do Not swallow.**
- **Keep out of reach of children and pets.**

4. Drain coolant when engine is cool. Remove the radiator cap, place a pan under the radiator,

and remove the drain plug at the bottom of the radiator.

5. Remove the coolant hose from the oil cooler and drain the coolant from the engine block (reference Figure 54).

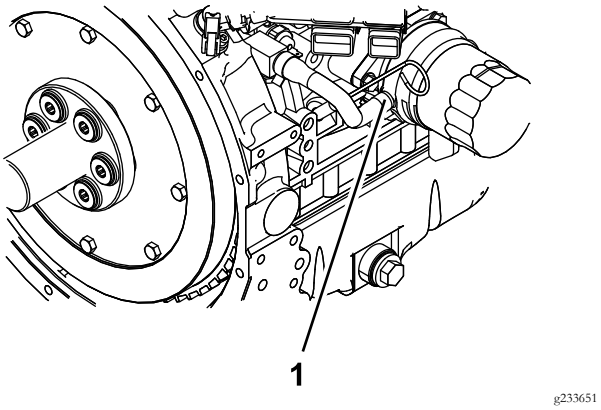

Figure 54

1. Coolant hose

6. Reinstall all drain plugs and hoses.
7. Fill radiator with a 50/50 mix of water and ethylene glycol.

   Note: The use of Havoline® Xtended Life coolant is recommended.

   Allow some room (approximately 1/2 inch (12.7 mm)) for expansion. Add 50/50 coolant mix to overflow bottle on the left side of the engine as required to bring the level up to the indicator line on the bottle.

⚠ WARNING

Engine compartment contains open belt drives, fans, and other rotating components that can cause injury. Fingers, hands, loose clothing, or jewelry can get caught by the rotating fan and drive shaft.

- **Do Not operate machine without the covers in place.**
- **Keep fingers, hands, and clothing clear of rotating components.**
- **Shut off engine, wait for moving parts to stop, engage parking brake and remove key, before performing maintenance.**

8. Operate engine until the engine thermostat opens and coolant is circulating through the radiator core. As air is purged from the engine block and the coolant level drops, add additional coolant to the radiator.
9. When the radiator is completely full and no additional coolant can be added, continue running and install the radiator cap. Make sure that the cap is completely seated by pressing down firmly while turning until the cap stops. Once the cap is installed, the engine may be stopped.

Thread Locking Adhesives

Thread locking adhesives such as "Loctite 242" or "Fel-Pro, Pro-Lock Nut Type" are used on the following fasteners:

Caster wheel spacer nuts.

Mobil HTS Grease (Or Food-Grade Anti-seize)

Mobil HTS grease (or food-grade anti-seize) is used in the following locations:

- Between the cutter housing spindle and bearings.
- Between the cutter housing spindle and sheave.

Copper-Based Anti-seize

Copper-based anti-seize is used in the following location:

On threads of Blade Bolts. See **Check Mower Blades** section.

Dielectric Grease

Dielectric grease is used on all blade type electrical connections to prevent corrosion and loss of contact. Dielectric grease should not be applied to sealed connectors.

Adjustments

Note: Disengage PTO, shut off engine, wait for all moving parts to stop, engage parking brake, and remove key before servicing, cleaning, or making any adjustments to the unit.

⚠ CAUTION

Raising the mower deck for service or maintenance relying solely on mechanical or hydraulic jacks could be dangerous. The mechanical or hydraulic jacks may not be enough support or may malfunction allowing the unit to fall, which could cause injury.

Do Not rely solely on mechanical or hydraulic jacks for support. Use adequate jack stands or equivalent support.

Deck Leveling– 60 and 72 Inch Models

1. Position the machine on a flat surface.
2. Shut off the engine, wait for all moving parts to stop, remove the key, and engage the parking brake.
3. Check the tire pressure in drive tires and pneumatic front caster tires (if equipped). Proper inflation pressure for tires is 18 psi (124 kPa). Adjust if necessary.
4. Using the deck-lift switch, move the deck height out of the transport position (or 5 1/2 inches (140 mm) cutting height).

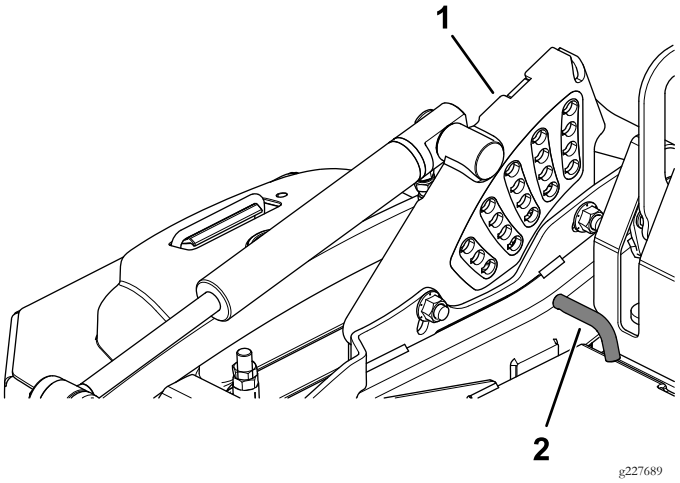

Figure 55

1. Height of cut bracket
2. Height of cut pin

5. Insert the height adjustment pin into the 3 inches (76 mm) cutting height location.
6. Release the transport lock and allow the deck to lower to the cutting height.
7. Raise the discharge deflector (side discharge units only).
8. Measure from the level surface to the front tip of the center blade. The measurement should read 3 inches (76 mm).

Note: In most conditions, the back tips on the side blades should be adjusted:

Side Discharge Units: 1/4 inch (6.4 mm) higher than the front.

Rear Discharge Units: to be level with the front.

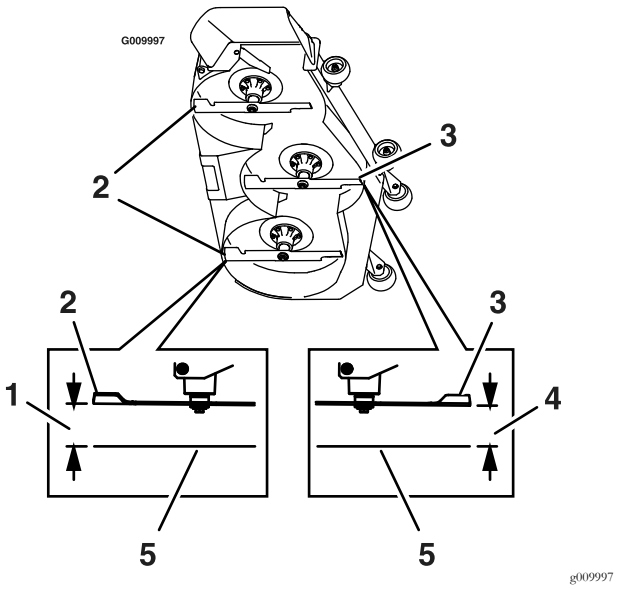

Figure 56

1. Side Discharge: 3 1/4 inches (8.3 cm)
   Rear Discharge: 3 inches (7.6 cm)
2. Back blade tip
3. Front blade tip
4. 3 inches (7.6 cm)
5. Level surface

9. Adjust the height — to increase, turn the adjuster screw clockwise; to decrease, turn counterclockwise.

   Loosen the jam nuts on the top of each deck adjuster. Fine tune the adjuster on the front deck lift assembly by turning it to get 3 inch (7.6 cm) height (see Figure 57).

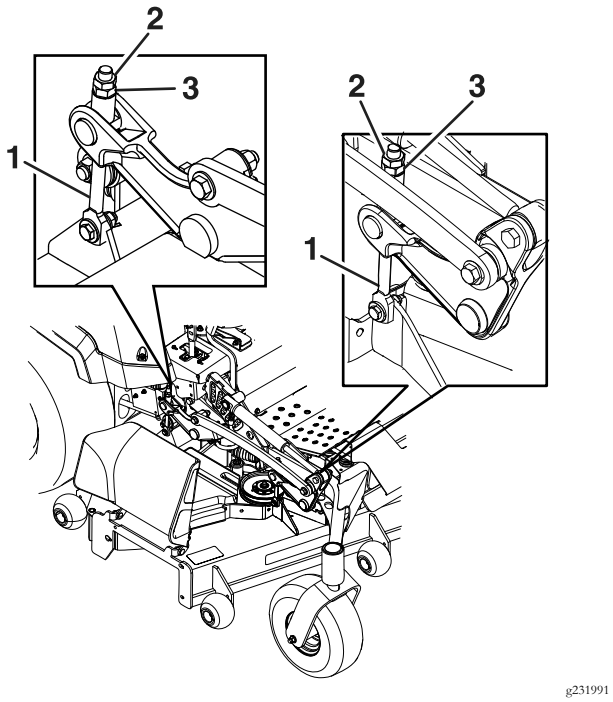

Figure 57

1. Adjuster link
2. Jam nut
3. Adjuster

10. Measure the back tip height. Fine tune rear adjusters as required; the single point adjustment can be utilized to gain more adjustment.
    - Side Discharge Units: The back tips of the side blades should measure 3 1/4 inches (8.3 cm).
    - Rear Discharge Units: The back tips of the side blades should measure 3 inches (7.6 cm).
11. Re-measure until all four sides are the correct height. Tighten all the nuts on the deck lift arm assemblies.
12. Lower discharge deflector (side discharge units only).
13. If the four deck adjusters do not have enough adjustment to achieve accurate cut height with the desired rake, the single point adjustment can be utilized to gain more adjustment (see Figure 58).

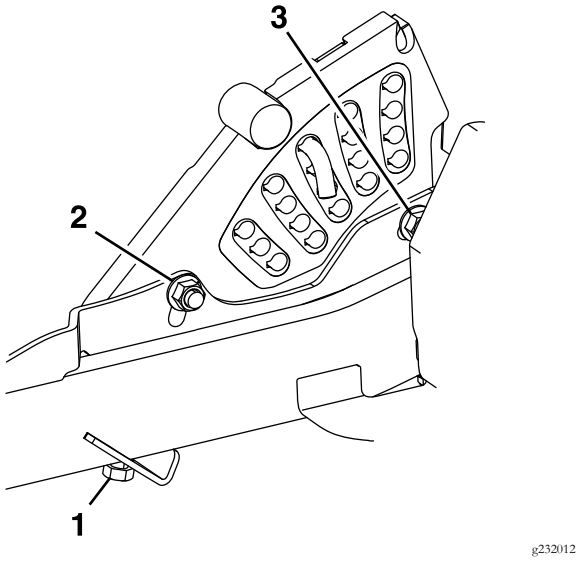

Figure 58

1. Single point height adjustment bolt
2. Front height of cut plate mounting bolt
3. Rear height of cut plate mounting bolt

14. To adjust the single point system, first loosen the front and rear height of cut plate mounting bolts.

    Note: On Rear Discharge Units: The mower deck is attached in the front holes at the factory (see Figure 59). If needed, use the back holes for further adjustment when leveling the mower deck.

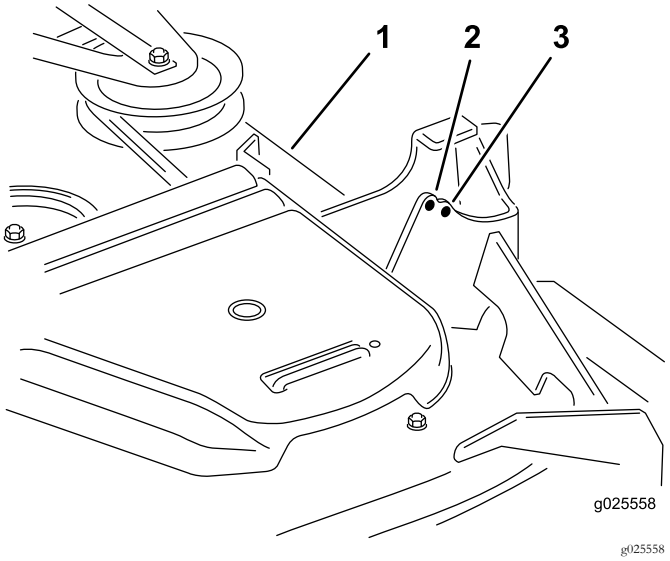

Figure 59

1. Mower deck
2. Front hole
3. Back hole

15. If the deck is too low, tighten the single point adjustment bolt by rotating it clockwise. If

the deck is too high, loosen the single point adjustment bolt by rotating it counterclockwise.

Note: Loosen or tighten the single point adjustment bolt enough to move the height of cut plate mounting bolts at least 1/3 the length of the available travel in their slots. This will regain some up and down adjustment on each of the four deck links.

16. Re-tighten front and rear height of cut plate mounting bolts.

Important: Torque the front and rear height of cut plate mounting bolts to 67-83 ft-lb (91-113 N-m).

17. Repeat steps 8 through 12.

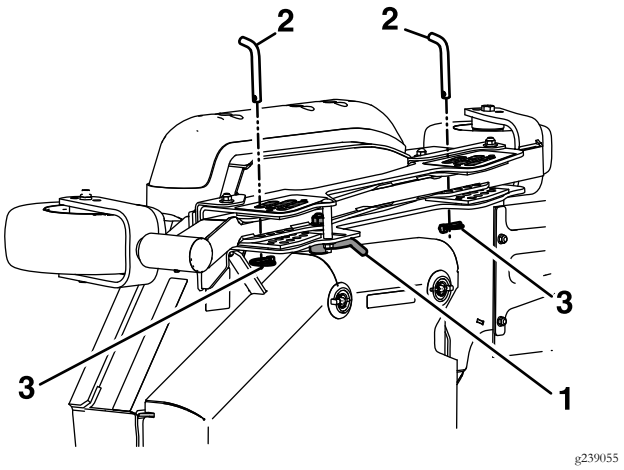

Figure 60

1. Unlock cam lock
2. Clevis pin
3. Lanyard

Deck Leveling– 96 and 144 Inch Models

Leveling the Center and Wing Decks

1. Position the machine on a flat surface.
2. Shut off the engine, wait for all moving parts to stop, remove the key, and engage the parking brake.
3. Check the tire pressure in drive tires and pneumatic front caster tires (if equipped). Proper inflation pressure for tires is 22 psi (152 kPa). Adjust if necessary.
4. Raise the center deck and fold the wings by pressing down at the rear of the deck lift rocker switch. Hold the switch down until both wings are completely folded.
5. Insert the center height adjustment pin into the 4 inches (102 mm) cutting height location.
6. Unlock the left and right wing deck cam locks.
7. Remove and retain the wing deck height of cut lanyard.
8. Insert the height adjustment pin into the 4 inch (102 mm) cutting height location and reinstall the lanyard.
9. Lock the left and right wing deck cam locks.
10. Start engine. **Brake must be engaged and motion control levers out to start engine. Operator does not have to be in the seat.** Be sure that all persons are clear of the deck wings. Press and hold the front of the deck control switch until the center deck lowers and both wings are completely unfolded to the cutting height.
11. Stop engine, wait for all moving parts to stop, engage the parking brake and remove the key.
12. Measure from the level surface to the front tip of the LH and RH center deck blades. The measurement should read 4 inches (102 mm).

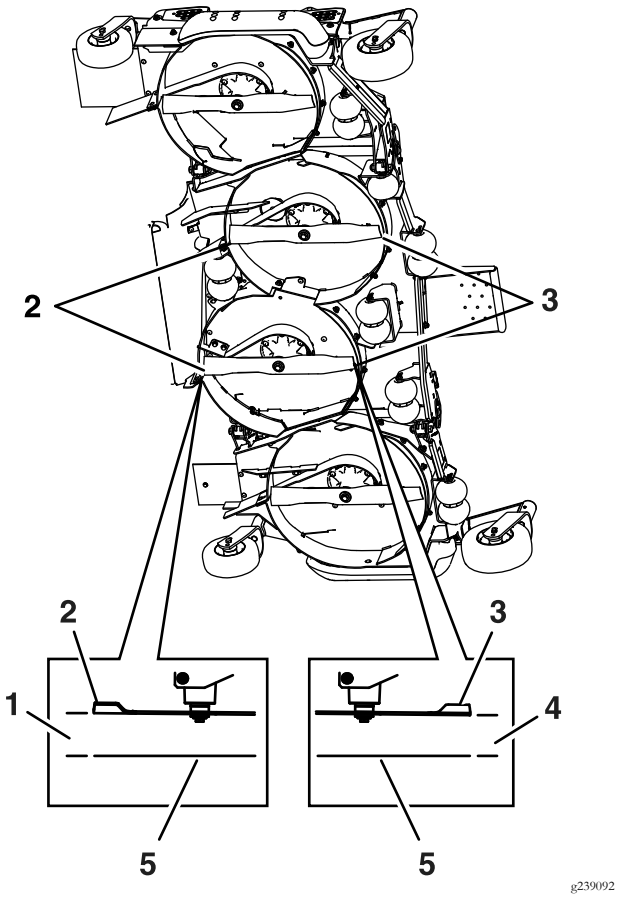

Figure 61

1. 4 1/16–4 3/8 inches (103–111 mm)
2. Back blade tip
3. Front blade tip
4. 4 inches (102 mm)
5. Level surface

Adjusting the Center Deck

1. Adjust the height — to increase, turn the adjuster screw clockwise; to decrease, turn counterclockwise.

   Loosen the jam nuts on the top of each deck adjuster. Fine tune the adjuster on the front deck lift assembly by turning it to get the correct height for the center deck left and right front blade tips (see Figure 62).

2. Measure the back tip height. Fine tune rear adjusters as required; the single point adjustment can be utilized to gain more adjustment.

   In most conditions, the rake (or difference between the back tips and front tips of the blades) should be adjusted 1/4 inch (6.4 mm) higher than the front with a minimum of 1/16 inch (3 mm) and a maximum of 3/8 inch (9.5 mm).

3. Re-measure until all four sides are the correct height. Tighten all the nuts on the deck lift arm assemblies.

4. If the four deck adjusters do not have enough adjustment to achieve accurate cut height with the desired rake, the single point adjustment can be utilized to gain more adjustment.

5. To adjust the single point system, first loosen the front and rear height of cut plate mounting bolts. Fine tune the rear adjusters as required; the single point adjustment can be utilized to gain more adjustment.

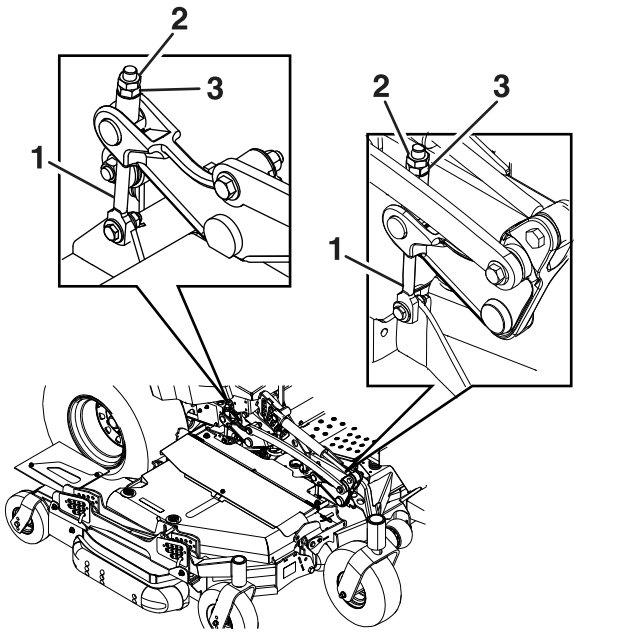

Figure 62

1. Adjuster link
2. Jam nut
3. Adjuster

6. If the deck is too low, tighten the single point adjustment bolt by rotating it clockwise. If the deck is too high, loosen the single point adjustment bolt by rotating it counterclockwise. Loosen the front and rear height of cut plate mounting bolts. Fine tune the rear adjusters as required; the single point adjustment can be utilized to gain more adjustment.

   Note: Loosen or tighten the single point adjustment bolt enough to move the height of cut plate mounting bolts at least 1/3 the length of

the available travel in their slots. This will regain some up and down adjustment on each of the four deck links.

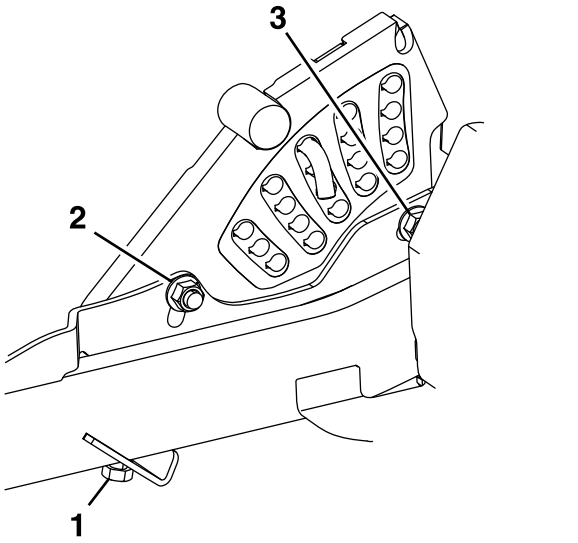

Figure 63

1. Single point height adjustment bolt
2. Front height of cut plate mounting bolt
3. Rear height of cut plate mounting bolt

7. Re-tighten front and rear height of cut plate mounting bolts.

   Important: Torque the front and rear height of cut plate mounting bolts to 27-33 ft-lb (37-45 N-m).

Adjusting the Wing Decks

1. Measure from the level surface to the front tip of the LH wing outside deck blade. The measurement should read 4 inches (102 mm).
2. Measure from the level surface to the front tip of the RH wing outside deck blade. The measurement should read 4 inches (102 mm).

   Note: As with the center deck, in most conditions, the rake or the back tips on the wing blades should be adjusted 1/4 inch (6.4 mm) higher than the front with a minimum of 1/16 inch (3 mm) and a maximum of 3/8 inch (9.5 mm).
3. The left and right wing decks have blade height adjustments with front and rear adjust points. To adjust the wing blade height, first loosen the front and rear height of cut hanger mounting nuts (items 1 and 4) as shown in Figure 64. There are four locations — two on each side of the channel.

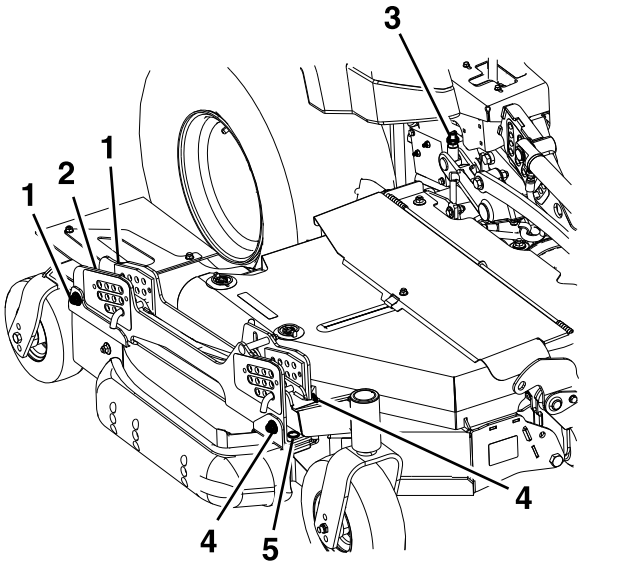

Figure 64
RH Wing Deck Shown

1. Rear hanger mounting nuts
2. Rear height adjustment hardware location
3. Single point rear adjustment
4. Front hanger mounting nuts
5. Front height adjustment hardware location

   - If the deck is too low, tighten the front height adjustment bolt (item 5, Figure 64) by rotating the bottom nut clockwise.
   - If the deck is too high, loosen the front height adjustment bolt (item 5, Figure 64) by rotating the bottom nut counterclockwise. Fine tune the rear adjusters as required.
4. Measure the back of the wing blades. If either has less than 1/16 inch (1.5 mm) rake, raise the back of the deck by tightening the LH and RH rear adjustments (item 2, Figure 64) until all four blades have a minimum of 1/16 inch rake (1.5 mm). Readjust the wing rear wheels so they lightly touch the ground with minimal pressure. Tighten all four rear hanger mount points (item 1, Figure 64).
5. Retighten the front and rear height of cut hanger jam nuts.

Deck Belt Tension

Self-tensioning - No adjustment necessary.

Parking Brake Adjustment for All Except 144 Inch Deck Models

Service Interval: After the first 100 hours
Every 400 hours thereafter

Check to make sure brake is adjusted properly. This procedure must be followed after the first 100 hours or when a brake component has been removed or replaced.

⚠ CAUTION

Raising the mower deck for service or maintenance relying solely on mechanical or hydraulic jacks could be dangerous. The mechanical or hydraulic jacks may not be enough support or may malfunction allowing the unit to fall, which could cause injury.

Do Not rely solely on mechanical or hydraulic jacks for support. Use adequate jack stands or equivalent support.

1. Drive the machine onto a level surface.
2. Disengage the blade control switch (PTO), move the motion control levers to the neutral locked position and engage the parking brake (lever is in the "up" position).
3. Stop the engine, wait for all moving parts to stop, and remove the key.
4. Raise the back of the machine up and support the machine with jack stands.
5. Remove the rear tires from the machine.
6. Remove any debris from the brake area.
7. Rotate the drive wheel release handle to the "released" position. Refer to the **Drive Wheel Release Valves** section in Operation.
8. If the link assembly is attached (see Figure 65)
   - in the front position, the length=8.63 inches (21.9 cm).
   - in the rear position, the length=9.15 inches (23.2 cm).
9. The length of the spring should measure 3 3/4 inches (8.9 cm).
10. Once the spring length is achieved, check to see if there is a visible gap between the trunion and the shoulder.

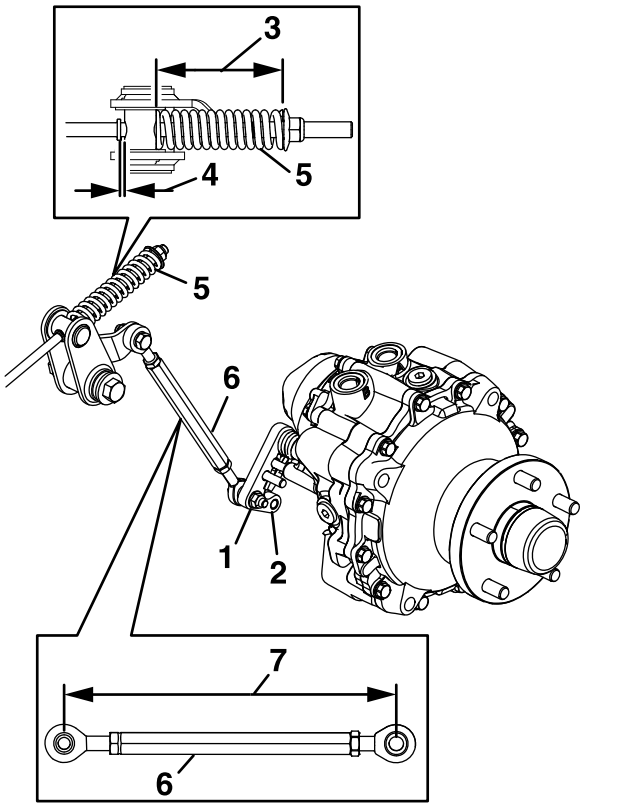

Figure 65

1. Front location
2. Rear location
3. 3 3/4 inches (8.9 cm)
4. Gap
5. Spring
6. Link assembly
7. Length

11. Disengage the park brake, the lever should be in the down position. Turn the wheel hub by hand in both directions relative to the caliper; the wheel hub should move freely.
12. If a gap is needed or the wheel hub does not move freely:
    A. Disengage the park brake.
    B. Disconnect and fine-tune the rear linkage assembly:
       - Shorten the link to create a gap.
       - Lengthen the link to allow wheel hub movement.
    C. Reconnect the rear linkage assembly.
13. Engage the parking brake and check the gap.
14. Repeat steps 11 through 14 until a visible gap is achieved and the wheel hub rotates freely. Repeat for the brake on the right side.

Note: The brake should fully disengage when the brake is in the "released" position.

15. Rotate the drive wheel release handle to the "operating" position. Refer to the **Drive Wheel Release Valves** section in Operation.
16. Install the rear tires and torque lug nuts to 85-105 ft-lb (115-142 N-m).
17. Remove jack stands.

Motion Control Linkage Adjustment

⚠ WARNING

Engine must be running and drive wheels must be turning so motion control adjustment can be performed. Contact with moving parts or hot surfaces may cause personal injury.

Keep fingers, hands, and clothing clear of rotating components and hot surfaces.

⚠ CAUTION

Raising the mower deck for service or maintenance relying solely on mechanical or hydraulic jacks could be dangerous. The mechanical or hydraulic jacks may not be enough support or may malfunction allowing the unit to fall, which could cause injury.

Do Not rely solely on mechanical or hydraulic jacks for support. Use adequate jack stands or equivalent support.

1. This adjustment must be made with the drive wheels turning. First raise the rear of machine up and support with jack stands (or equivalent support) just high enough to allow the drive wheels to rotate freely.
2. Unhook seat latch and tilt seat forward.
3. Remove the electrical connection from the seat safety switch, located directly to the left of the seat switch assembly beside the hydraulic oil reservoir.

   Temporarily install a jumper wire across the terminals in the connector of the main wiring harness.
4. Run the unit at least 5 minutes with the drive levers at full forward speed to bring hydraulic system oil up to operating temperature.
5. Loosen lock nuts from the ball joints at each end of the pump control linkage (Figure 66).

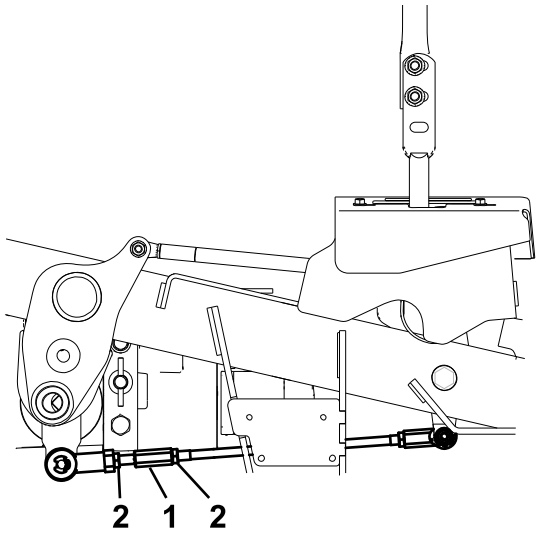

Figure 66
Right-Hand Side of Unit

1. Turn here to adjust
2. Loosen here (right-hand thread)

6. Start engine. **Brake must be engaged and motion control levers out to start engine. Operator does not have to be in the seat because of the jumper wire being used.** Run engine at full throttle and release brake.

   Note: The motion control lever needs to be in neutral while making any necessary adjustments.

   The left rod assembly controls the left wheel and the right rod assembly controls the right wheel.
7. Bring the motion control lever into the neutral position. Adjust RH pump control rod length by rotating the double nuts on the rod in the appropriate direction until the wheels slightly creep in reverse. Move the motion control lever to the reverse position and while applying slight pressure to the lever allow the reverse indicator spring to bring the levers back to neutral. The wheel must stop turning or slightly creep in reverse. When adjustment is complete, tighten lock nuts onto ball joints. Repeat for LH motion control lever.
8. Shut off unit. Remove jumper wire from wire harness connector and plug connector into seat switch.

Motion Control Damper Adjustment

The top damper mounting bolt can be adjusted to obtain a more desired motion control lever resistance. See Figure 67 for mounting options.

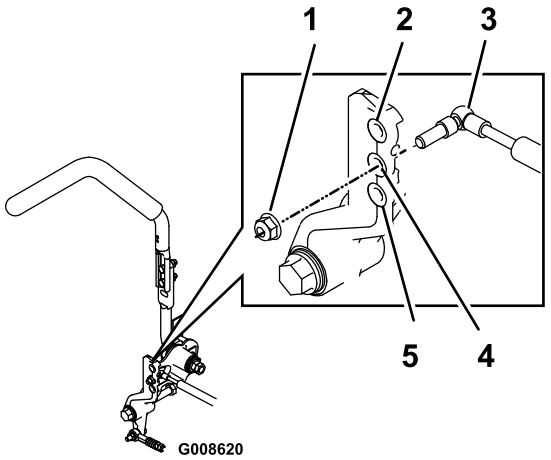

g008620

Figure 67

RH Motion Control Shown

1. Torque nyloc nut to 200 in-lb (16.7 ft-lb). Bolt must protrude past end of nyloc nut after torque. A T-40 Torx bit will be necessary to hold the stud from turning.
2. Most resistance (firmest feel)
3. Damper
4. Medium resistance (medium feel)
5. Least resistance (softest feel)

Caster Pivot Bearings Pre-Load Adjustment

Remove dust cap from caster and tighten nyloc nut until washers are flat and back off 1/4 of a turn to properly set the pre-load on the bearings. If disassembled, make sure the spring disc washers are reinstalled as shown in Figure 68.

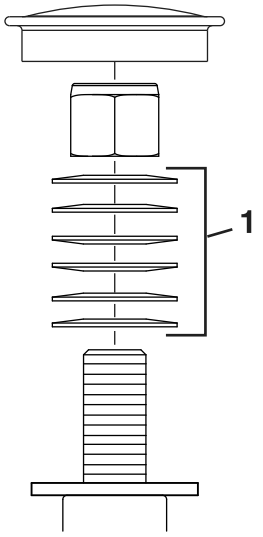

g228558

Figure 68

1. Spring disc washers

Cleaning

Cleaning and Storing Safety

- Park machine on level ground, disengage drives, set parking brake, stop engine, and remove key. Wait for all moving parts to stop before leaving the operator's position. Allow the machine to cool before servicing, adjusting, fueling, cleaning, or storing.
- Clean grass and debris from the cutting unit, muffler, drives, grass catcher, and engine compartment to prevent fires.
- Allow the machine to cool before storing the machine in any enclosure. Do Not store the machine or fuel container, or refuel, where there is an open flame, spark, or pilot light such as on a water heater or other appliance.

Clean Engine and Exhaust System Area

Service Interval: Before each use or daily (May be required more often in dry or dirty conditions.)

⚠ CAUTION

Excessive debris around engine and exhaust system area can cause engine, exhaust area, and hydraulic system to overheat which can create a fire hazard.

Clean all debris from engine and exhaust system area.

1. Stop engine, wait for all moving parts to stop, and remove key. Engage parking brake.
2. Clean around flywheel, cylinder head, injectors, and injector pump.
3. Clean all debris from the exhaust system area.
4. Wipe up any excessive grease or oil around the engine and exhaust area.

Important: Do Not use water to clean engine. Use low pressure compressed air. See Engine Owner's Manual.

Clean the Radiator

Service Interval: Every 50 hours (May be required more often in dry or dirty conditions.)

1. Stop engine, wait for all rotating parts to stop and remove key. Engage parking brake.
2. Allow engine to cool.
3. Rotate hood forward
4. Using compressed air, blow out debris stuck between the fins of the entire radiator, both from the top down and from the bottom up.
5. If debris remains, it may be necessary to use water from a low pressure hose. If the radiator is clean, proceed to step 7.
6. Cover the engine with a piece of cardboard, or a plastic sheet. Squirt water through the fins. Blow through with low pressure air from both directions. If debris remains, repeat until clean.
7. Lower hood.
8. Start the engine to ensure the fan is functioning properly.

Clean Debris From Machine

Service Interval: Before each use or daily

1. Stop engine, wait for all moving parts to stop, and remove key. Engage parking brake.
2. Clean off any oil, debris, or grass build-up on the machine and cutting deck, especially under deck belt shields, around the fuel tank, around engine and exhaust area.

Important: You can wash the machine with mild detergent and water. Do not pressure wash the machine. Avoid excessive use of water, especially near the control panel, under the seat, around the engine, hydraulic pumps, and motors.

Clean Hood Screen on Machine

Service Interval: Every 50 hours (May be required more often in dry or dirty conditions.)

1. Stop engine, wait for all moving parts to stop, and remove key. Engage parking brake.
2. Clean off any debris, or grass build-up on the machine hood screen, hood and around engine and exhaust area.

   Important: You can wash the machine with mild detergent and water. Do not pressure wash the machine. Avoid excessive use of water, especially near the control panel, under the seat, around the engine, hydraulic pumps, and motors.

Clean Grass Build-Up Under Deck

Service Interval: Before each use or daily

1. Stop engine, wait for all moving parts to stop, and remove key. Engage parking brake.
2. Raise deck to the transport position.

   For 96 inch models, raise the center deck and outer wings. Lock each wing in the up position.
3. Lift the front of machine and support it using jack stands or equivalent support.
4. Clean out any grass build-up from underside of deck and in discharge deflector.

Inspect Engine Valve Clearance

Service Interval: Every 800 hours

Inspect the engine-valve clearance. Refer to the engine owner's manual.

Waste Disposal

Motor Oil Disposal

Engine oil and hydraulic oil are both pollutants to the environment. Dispose of used oil at a certified recycling center or according to your state and local regulations.

Battery Disposal

⚠ DANGER

Battery electrolyte contains sulfuric acid, which is poisonous and can cause severe burns. Swallowing electrolyte can be fatal or if it touches skin can cause severe burns.

- **Wear safety glasses to shield eyes, and rubber gloves to protect skin and clothing when handling electrolyte.**
- **Do Not swallow electrolyte.**
- **In the event of an accident, flush with water and call a doctor immediately.**

Federal law states that batteries should not be placed in the garbage. Management and disposal practices must be within relevant federal, state, or local laws.

If a battery is being replaced or if the unit containing the battery is no longer operating and is being scrapped, take the battery to a local certified recycling center. If no local recycling is available return the battery to any certified battery reseller.

Troubleshooting

Important: It is essential that all operator safety mechanisms be connected and in proper operating condition prior to mower use.

When a problem occurs, do not overlook the simple causes. For example: starting problems could be caused by an empty fuel tank.

The following table lists some of the common causes of trouble. Do not attempt to service or replace major items or any items that call for special timing of adjustment procedures (such as valves, governor, etc.). Have this work done by your **Engine Service Dealer**.

Note: When disconnecting electrical connectors DO NOT pull on the wires to separate the connectors.

Problem	Possible Cause	Corrective Action
Starter does not crank	1. Parking brake is not engaged.	1. Set the parking brake.
	2. Drive levers are not in neutral lock position.	2. Ensure the drive levers are in the neutral lock position.
	3. Battery does not have a full charge.	3. Charge the battery. See **Check Battery Charge** and **Recommended Jump Starting Procedure** sections in Maintenance.
	4. Electrical connections are corroded, loose or faulty.	4. Check the electrical connections for good contact. Clean connector terminals thoroughly with electrical contact cleaner, apply dielectric grease and reconnect.
	5. Fuse is blown.	5. Replace the blown fuse.
	6. Relay or switch is defective.	6. Contact an Authorized Service Dealer.
Engine will not start, starts hard, or fails to keep running	1. Fuel tank is empty.	1. Fill the fuel tank.
	2. Oil level in the crankcase is low.	2. Add oil to the crankcase.
	3. Dirt in fuel filter.	3. Replace the fuel filter.
	4. Dirt, water, or stale fuel is in the fuel system.	4. Contact an Authorized Service Dealer.
	5. Air cleaner is dirty.	5. Clean or replace the air cleaner element.
	6. Seat switch is not functioning properly.	6. Check the seat switch indicator. Replace seat if needed.
	7. Electrical connections are corroded, loose or faulty.	7. Check the electrical connections for good contact. Clean connector terminals thoroughly with electrical contact cleaner, apply dielectric grease and reconnect.
	8. Relay or switch is defective.	8. Contact an Authorized Service Dealer.
Engine loses power	1. Engine load is excessive	1. Reduce the ground speed.
	2. Air cleaner is dirty.	2. Clean or replace the air cleaner element.
	3. Oil level in the crankcase is low.	3. Add oil to the crankcase.
	4. Dirt in fuel filter.	4. Replace the fuel filter.
	5. Dirt, water, or stale fuel is in the fuel system.	5. Contact an Authorized Service Dealer.
Engine overheats.	1. Engine load is excessive.	1. Reduce the ground speed.
	2. Oil level in the crankcase is low.	2. Add oil to the crankcase.
	3. Dirty air filter.	3. Clean or replace the air cleaner element.
	4. Coolant level is low.	4. Add coolant.
	5. Debris on or around radiator.	5. Remove debris (see **Clean the Radiator** section in Maintenance).
	6. Water pump or alternator belt is worn, loose, or broken.	6. Contact an Authorized Service Dealer.

Troubleshooting

Problem	Possible Cause	Corrective Action
Mower pulls left or right (with levers fully forward)	1. Tracking needs adjustment. 2. Tire pressure in drive tires not correct. 3. Reverse indicator and motion control linkage need adjustment.	1. Adjust the tracking. 2. Adjust tire pressure in the drive tires. 3. Adjust the reverse indicator and the motion control linkage.
Machine does not drive	1. By pass valve is not closed tight. 2. Hydraulic fluid level is low or too hot.	1. Tighten the by pass valve. 2. Add hydraulic fluid to reservoir or let it cool down.
Uneven cutting height.	1. Blade(s) not sharp. 2. Cutting blade(s) is/are bent. 3. Mower deck is not level. 4. Underside of mower is dirty. 5. Tire pressure in drive tires not correct. 6. Blade spindle bent. 7. Tips of adjacent blades are at an uneven cutting height. Blades tips should be even within 3/16 inch which is approximately one blade thickness.	1. Sharpen the blade(s). 2. Install new cutting blade(s). 3. Level mower deck from side-to-side and front-to-rear. 4. Clean the underside of the mower. 5. Adjust tire pressure in the drive tires. 6. Contact an Authorized Service Dealer. 7. Replace blades, spindles and (or) check for damage to mower deck.
Abnormal vibration	1. Cutting blade(s) is/are bent or unbalanced. 2. Blade mounting bolt is loose. 3. Engine mounting bolts are loose. 4. Loose engine pulley, idler pulley, or blade pulley. 5. Engine pulley is damaged. 6. Blade spindle is bent. 7. Belt is damaged.	1. Install new cutting blade(s). 2. Tighten the blade mounting bolt. 3. Tighten the engine mounting bolts. 4. Tighten the appropriate pulley. 5. Contact an Authorized Service Dealer. 6. Contact an Authorized Service Dealer. 7. Install new belt.
Blades do not rotate.	1. Drive belt is worn, loose or broken. 2. Drive belt is off pulley. 3. Deck belt is worn, loose or broken. 4. Deck belt is off pulley. 5. Broken or missing idler spring. 6. Clutch has disengaged. 7. Wings are not fully lowered.	1. Check the belt tension. 2. Check belt for damage; replace if necessary. Install drive belt and check belt guide for correct position. 3. Install new deck belt. 4. Install deck pulley and check the idler pulley, idler arm and spring for correct position and function. 5. Replace the spring. 6. Engine has overheated; determine cause of overheat (see Engine overheats). 7. Lower the wings.
Clutch will not engage.	1. Fuse is blown. 2. Low voltage supply at the clutch. 3. Inadequate current supply. 4. Engine has overheated. 5. Wings are not fully lowered.	1. Replace fuse. Check coil resistance, battery charge, charging system, and wiring connections and replace if necessary. 2. Check coil resistance, battery charge, charging system, and wiring connections and replace if necessary. 3. Repair or replace clutch lead wire or electrical system. Clean connector contacts. 4. Determine cause of overheat (see Engine overheats). 5. Lower the wings.

Schematics

Electrical Logic Schematic—Yanmar Engine 3TNV80FT

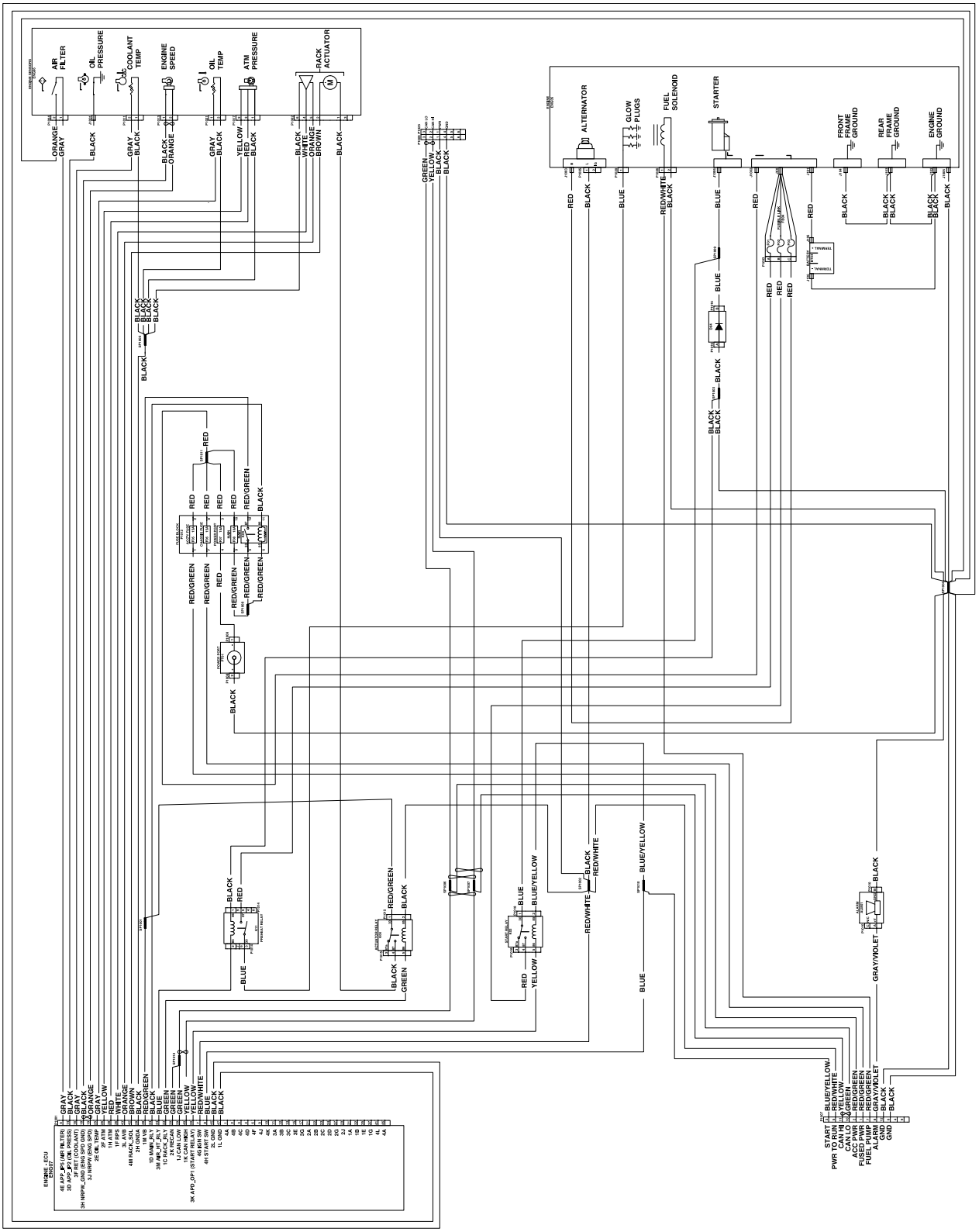

g532021

Electrical Logic Schematic—Yanmar Engine 3TNV88C

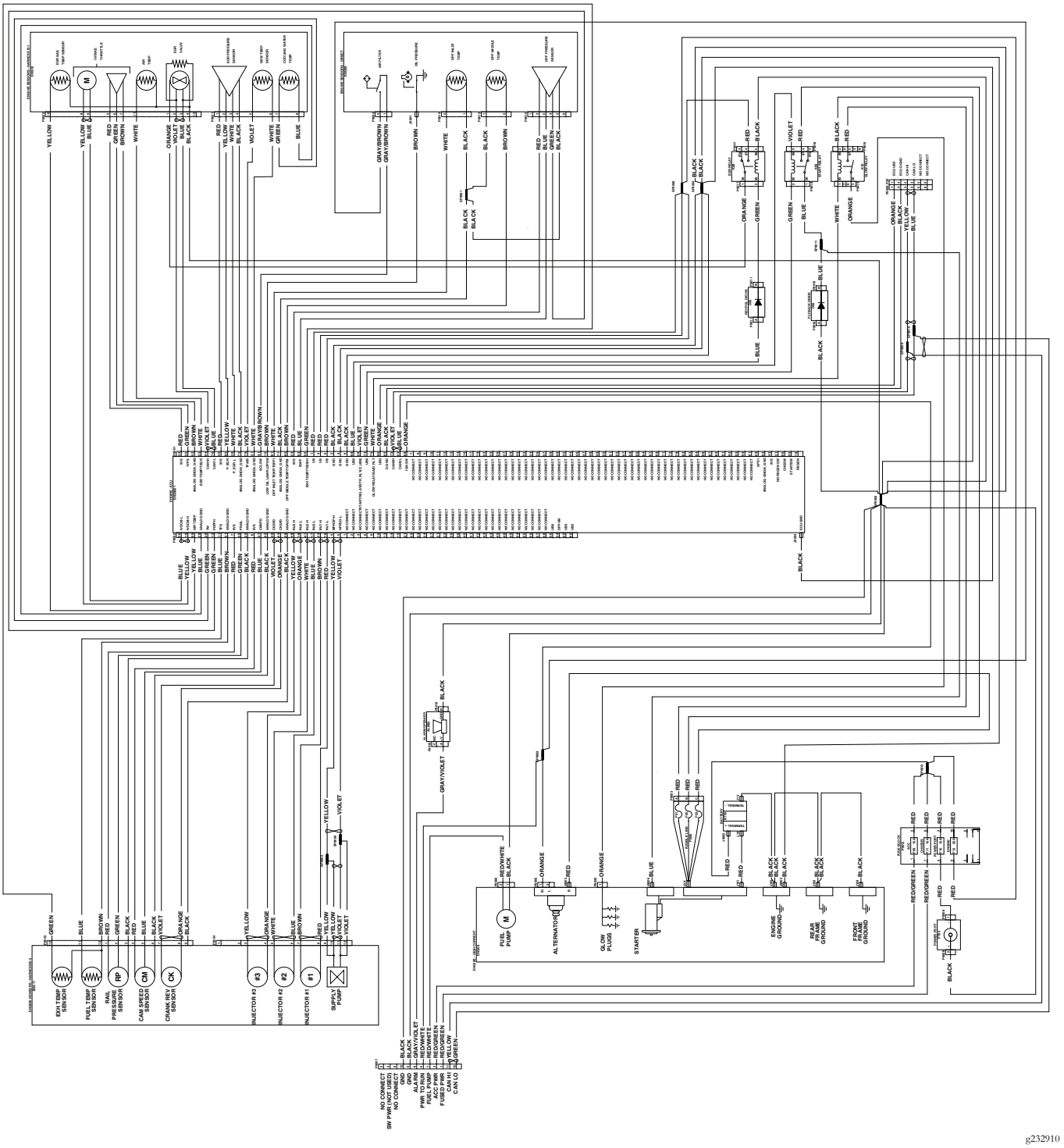

Electrical Logic Schematic—Yanmar Engine 3TNV86CT and Tractor (RED) 144 Inch Models

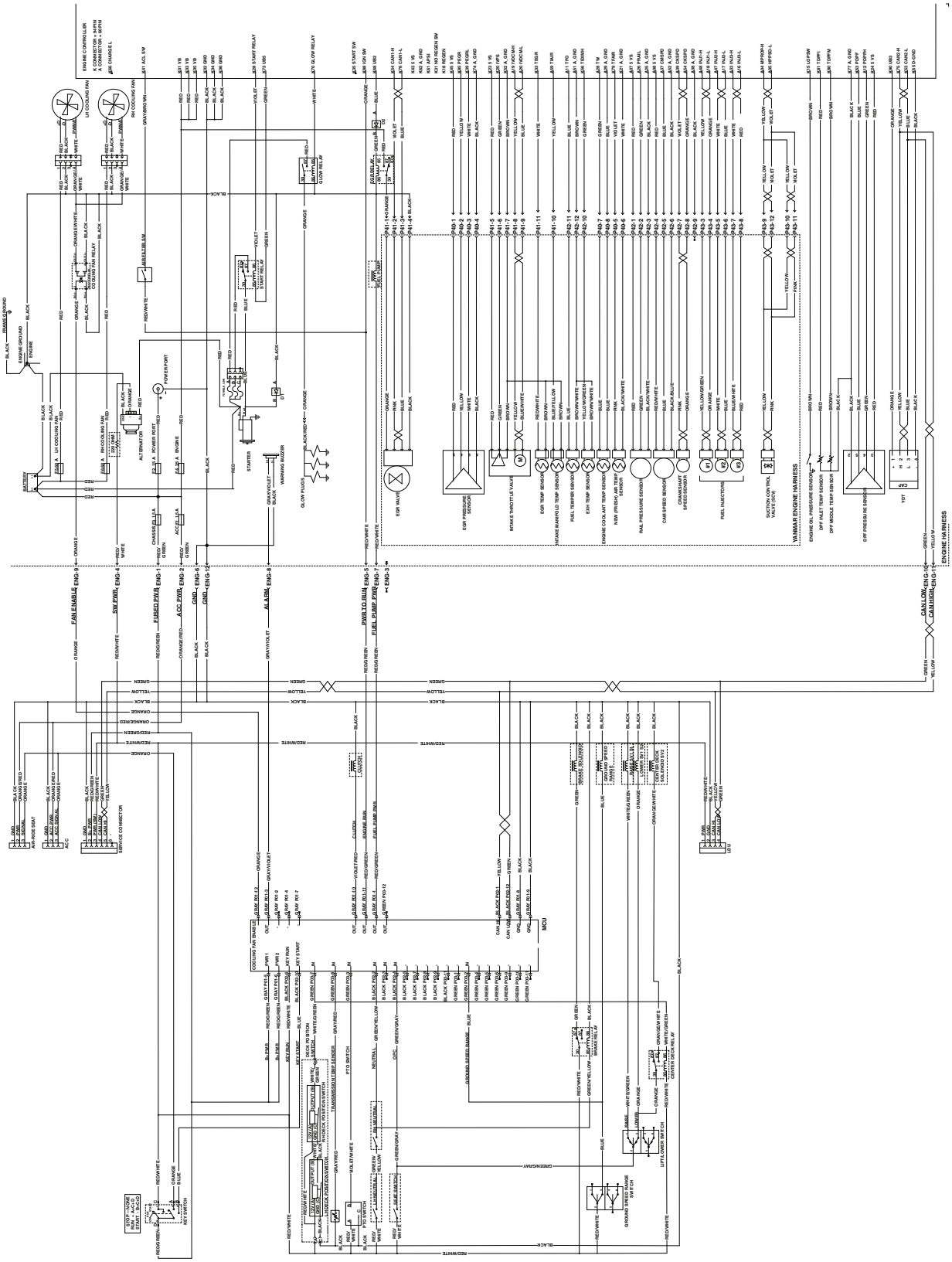

g441456

Electrical Logic Schematic—Tractor (RED) 60 and 72 Inch Models

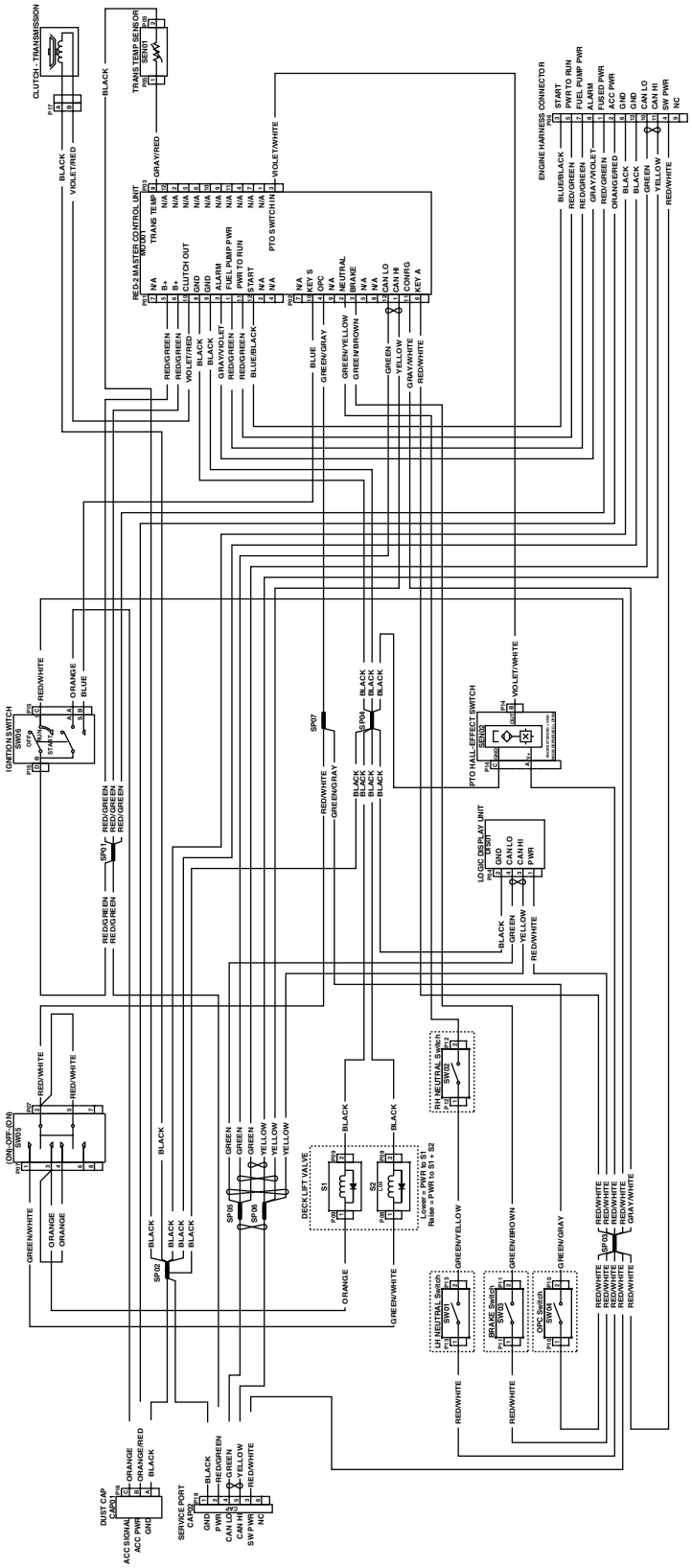
CLUTCH - TRANSMISSION
TRANS TEMP SENSOR
RED-2 MASTER CONTROL UNIT
ENGINE HARNESS CONNECTOR
IGNITION SWITCH
SW06
PTO HALL-EFFECT SWITCH
LOGIC DISPLAY UNIT
(ON-OFF-ON)
SW05
DECK LIFT VALVE
RH NEUTRAL Switch
SW02
LH NEUTRAL Switch
SW01
BRAKE Switch
SW03
OPC Switch
SW04
DUST CAP
SERVICE PORT
BLACK
VIOLET/RED
GRAY/RED
VIOLET/WHITE
BLUE/BLACK
RED/GREEN
GRAY/VIOLET
RED/GREEN
ORANGE/RED
BLACK
BLACK
GREEN
YELLOW
RED/WHITE
ORANGE
BLUE
RED/WHITE
RED/GREEN
RED/GREEN
RED/GREEN
BLACK
BLACK
BLACK
BLACK
BLACK
BLACK
BLACK
BLACK
GREEN
GREEN
YELLOW
YELLOW
YELLOW
YELLOW
GREEN/WHITE
ORANGE
ORANGE
ORANGE
BLUE
GREEN/GRAY
GREEN/YELLOW
GREEN/BROWN
GREEN/GRAY
RED/WHITE
RED/WHITE
RED/WHITE

Electrical Logic Schematic—Tractor (RED) 96 Inch Models

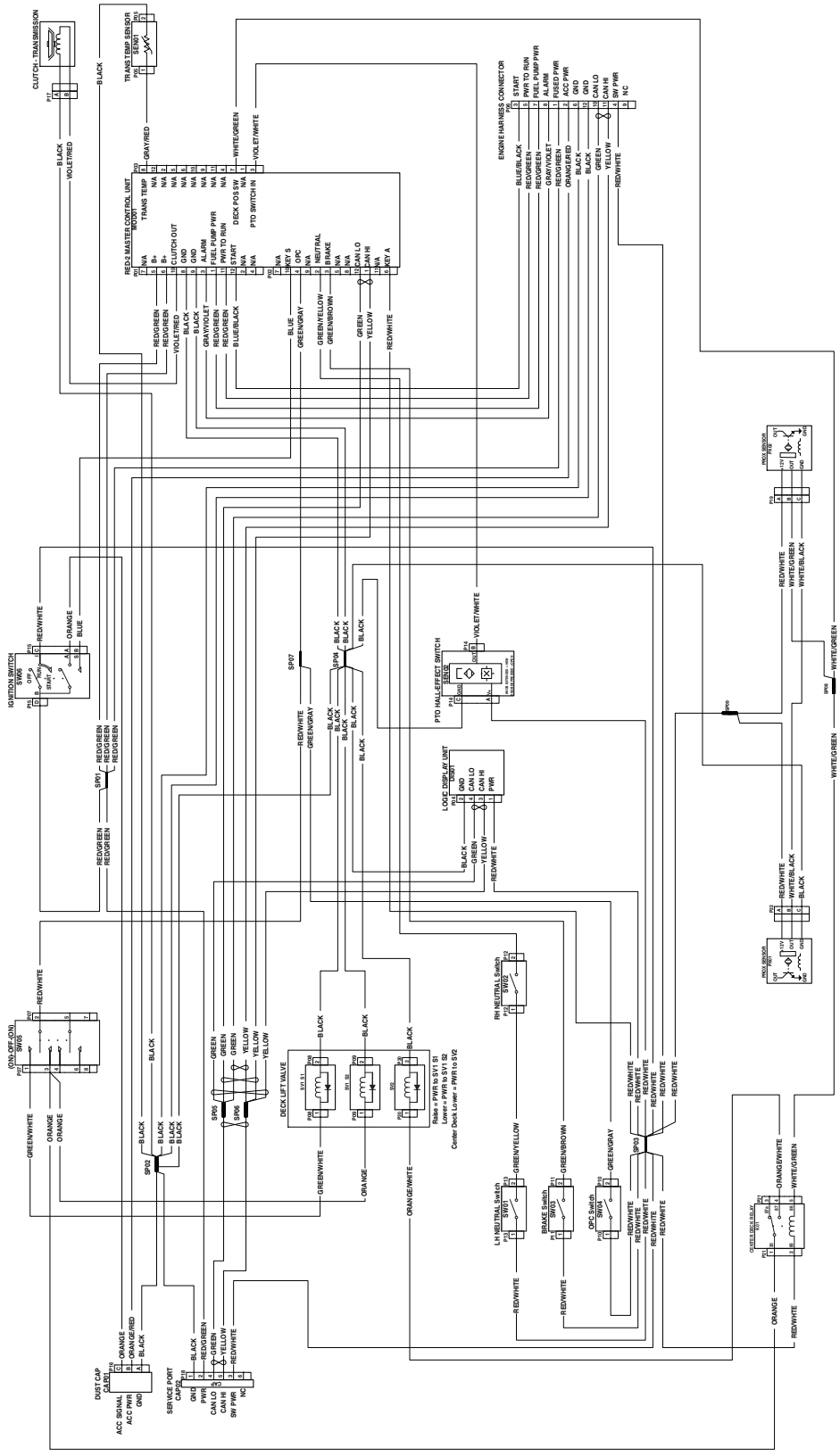

g441918

Hydraulic Diagram—60 and 72 Inch Models

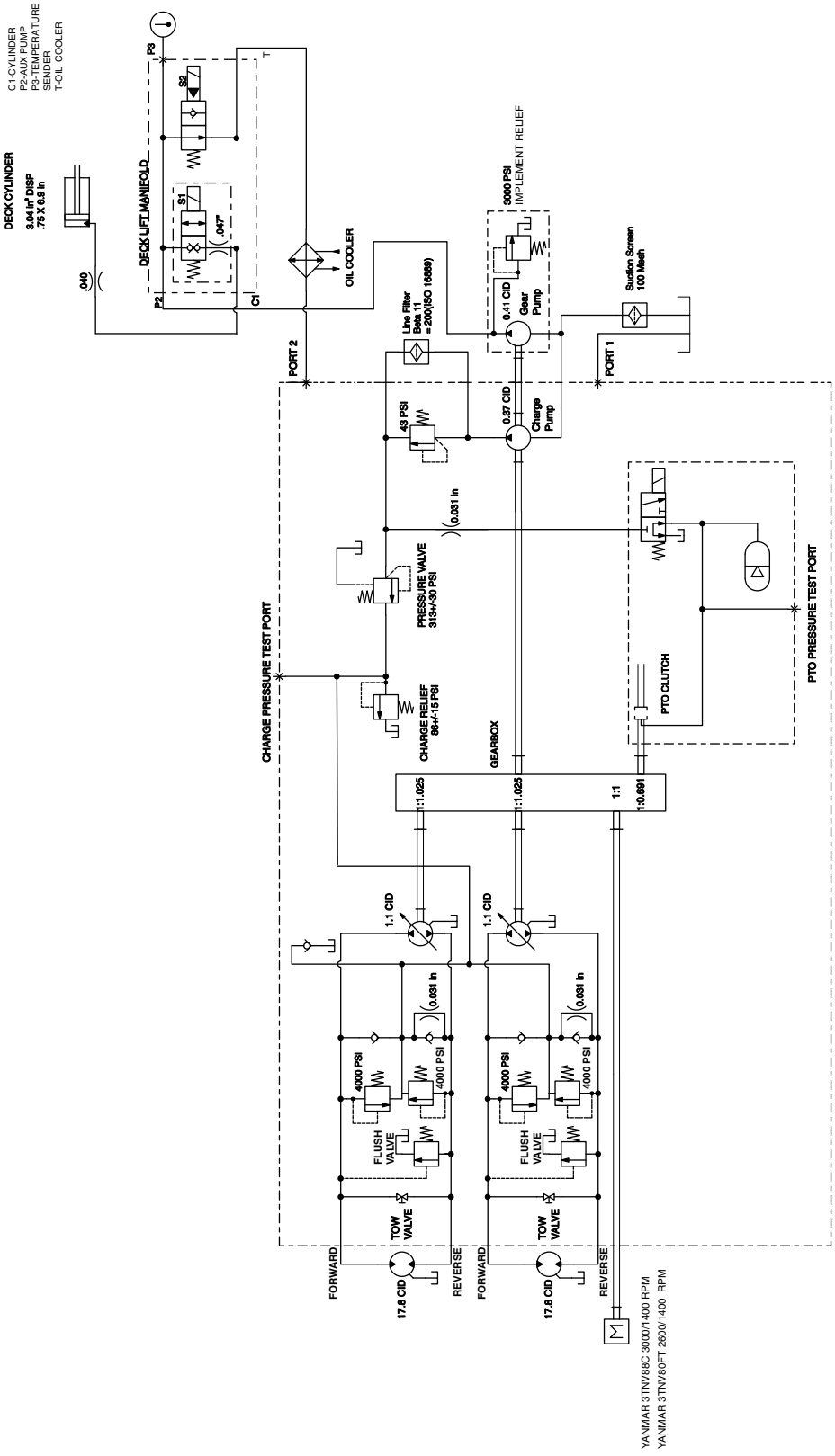

g413629

Hydraulic Diagram—96 Inch Models

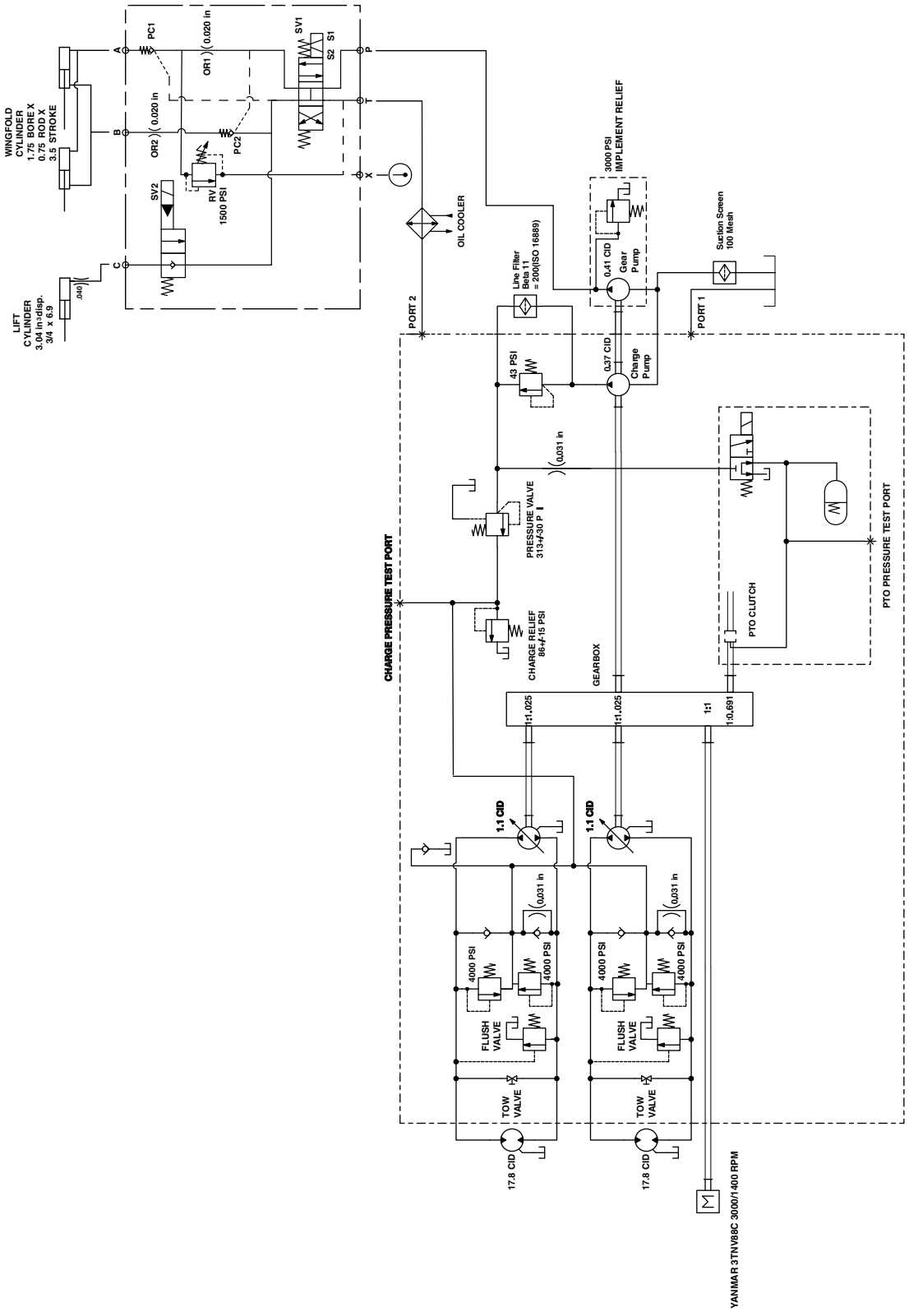

g441919

Hydraulic Diagram—144 Inch Models

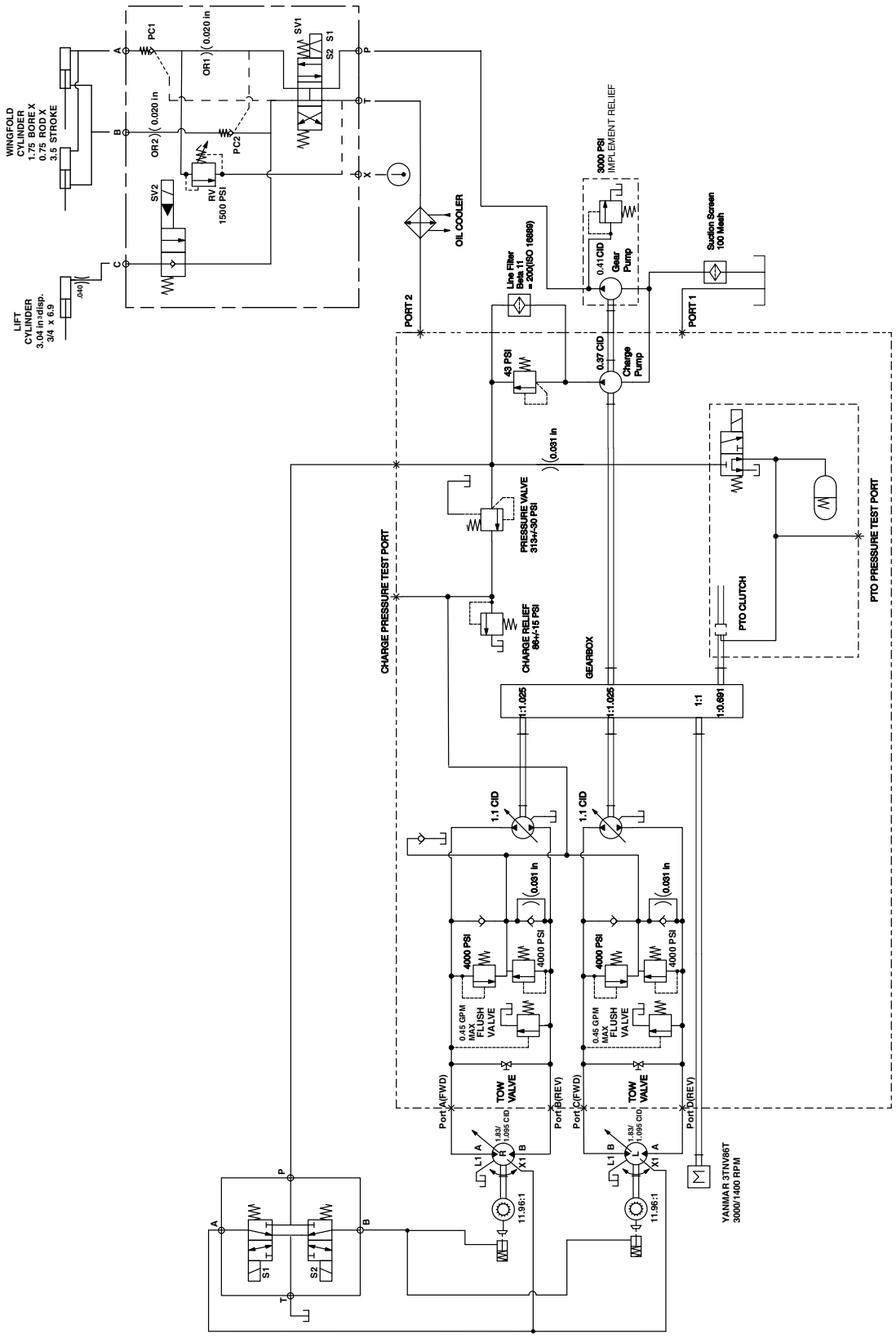

g441457

California Proposition 65 Warning Information

What is this warning?

You may see a product for sale that has a warning label like the following:



WARNING: Cancer and Reproductive Harm—www.p65Warnings.ca.gov.

What is Prop 65?

Prop 65 applies to any company operating in California, selling products in California, or manufacturing products that may be sold in or brought into California. It mandates that the Governor of California maintain and publish a list of chemicals known to cause cancer, birth defects, and/or other reproductive harm. The list, which is updated annually, includes hundreds of chemicals found in many everyday items. The purpose of Prop 65 is to inform the public about exposure to these chemicals.

Prop 65 does not ban the sale of products containing these chemicals but instead requires warnings on any product, product packaging, or literature with the product. Moreover, a Prop 65 warning does not mean that a product is in violation of any product safety standards or requirements. In fact, the California government has clarified that a Prop 65 warning "is not the same as a regulatory decision that a product is 'safe' or 'unsafe.'" Many of these chemicals have been used in everyday products for years without documented harm. For more information, go to https://oag.ca.gov/prop65/faqs-view-all.

A Prop 65 warning means that a company has either (1) evaluated the exposure and has concluded that it exceeds the "no significant risk level"; or (2) has chosen to provide a warning based on its understanding about the presence of a listed chemical without attempting to evaluate the exposure.

Does this law apply everywhere?

Prop 65 warnings are required under California law only. These warnings are seen throughout California in a wide range of settings, including but not limited to restaurants, grocery stores, hotels, schools, and hospitals, and on a wide variety of products. Additionally, some online and mail order retailers provide Prop 65 warnings on their websites or in catalogs.

How do the California warnings compare to federal limits?

Prop 65 standards are often more stringent than federal and international standards. There are various substances that require a Prop 65 warning at levels that are far lower than federal action limits. For example, the Prop 65 standard for warnings for lead is 0.5 µg/day, which is well below the federal and international standards.

Why don't all similar products carry the warning?

- Products sold in California require Prop 65 labelling while similar products sold elsewhere do not.
- A company involved in a Prop 65 lawsuit reaching a settlement may be required to use Prop 65 warnings for its products, but other companies making similar products may have no such requirement.
- The enforcement of Prop 65 is inconsistent.
- Companies may elect not to provide warnings because they conclude that they are not required to do so under Prop 65; a lack of warnings for a product does not mean that the product is free of listed chemicals at similar levels.

Why does Exmark include this warning?

Exmark has chosen to provide consumers with as much information as possible so that they can make informed decisions about the products they buy and use. Exmark provides warnings in certain cases based on its knowledge of the presence of one or more listed chemicals without evaluating the level of exposure, as not all the listed chemicals provide exposure limit requirements. While the exposure from Exmark products may be negligible or well within the "no significant risk" range, out of an abundance of caution, Exmark has elected to provide the Prop 65 warnings. Moreover, if Exmark does not provide these warnings, it could be sued by the State of California or by private parties seeking to enforce Prop 65 and subject to substantial penalties.

MAXIMIZE THE PERFORMANCE OF YOUR EXMARK MACHINE.



EXMARK® PREMIUM ENGINE OIL

Exmark now offers a family of engine oil viscosities to perform well in any environment. Each viscosity has the same synthetic formulation to give you what you need in punishing conditions. We designed each grade to the highest quality, making it ideal even for diesel applications. Coupled with Exmark Premium Fuel Treatment, we have the performance products to make your machine hum.

EXMARK PREMIUM ENGINE OIL SAE 30/10W-30

- Meets zero shear requirements of a straight grade SAE 30 as well as the cold temp properties of a 10W-30.
- Most versatile oil in the industry.
- Superior corrosion protection over conventional oil - even in corrosive, humid environments.

EXMARK PREMIUM ENGINE OIL SAE 10W-50

- Full synthetic formulation gives you peak performance. Don't settle for less.
- Wide span multi-grade combines easy starting in cold weather with maximum protection in high temperature operation.
- Reduce friction & wear over standard mineral formulations.

EXMARK PREMIUM ENGINE OIL UTV FORMULATION

- 4-cycle high-temp formulation.
- Heavier viscosity, full synthetic, perfect for your UTV.

EXMARK PREMIUM ENGINE OIL SAE 20W-50

- Perfect for your big block engine, or any application in severe service.
- Same full synthetic formulation as all other Exmark Premium viscosities.
- Also effective for use in severe service small block engines.

EXMARK PREMIUM ENGINE OIL SAE 0W-40

- The perfect choice for when the weather turns cold or unpredictable, and your Exmark UTV has to perform.
- Commercial quality for severe service.
- Advanced additive package helps prevent corrosion from long-term storage.

EXMARK PREMIUM UTV EXTREME CONDITIONS GEAR OIL

- SAE 80W-90, designed to keep your UTV performing at its peak.
- Shear stable, hypoid gear lube.
- Includes a premium additive system to combat wear, oxidation, rust & corrosion.

Available from your local Exmark dealer. Find your closest dealer at exmark.com

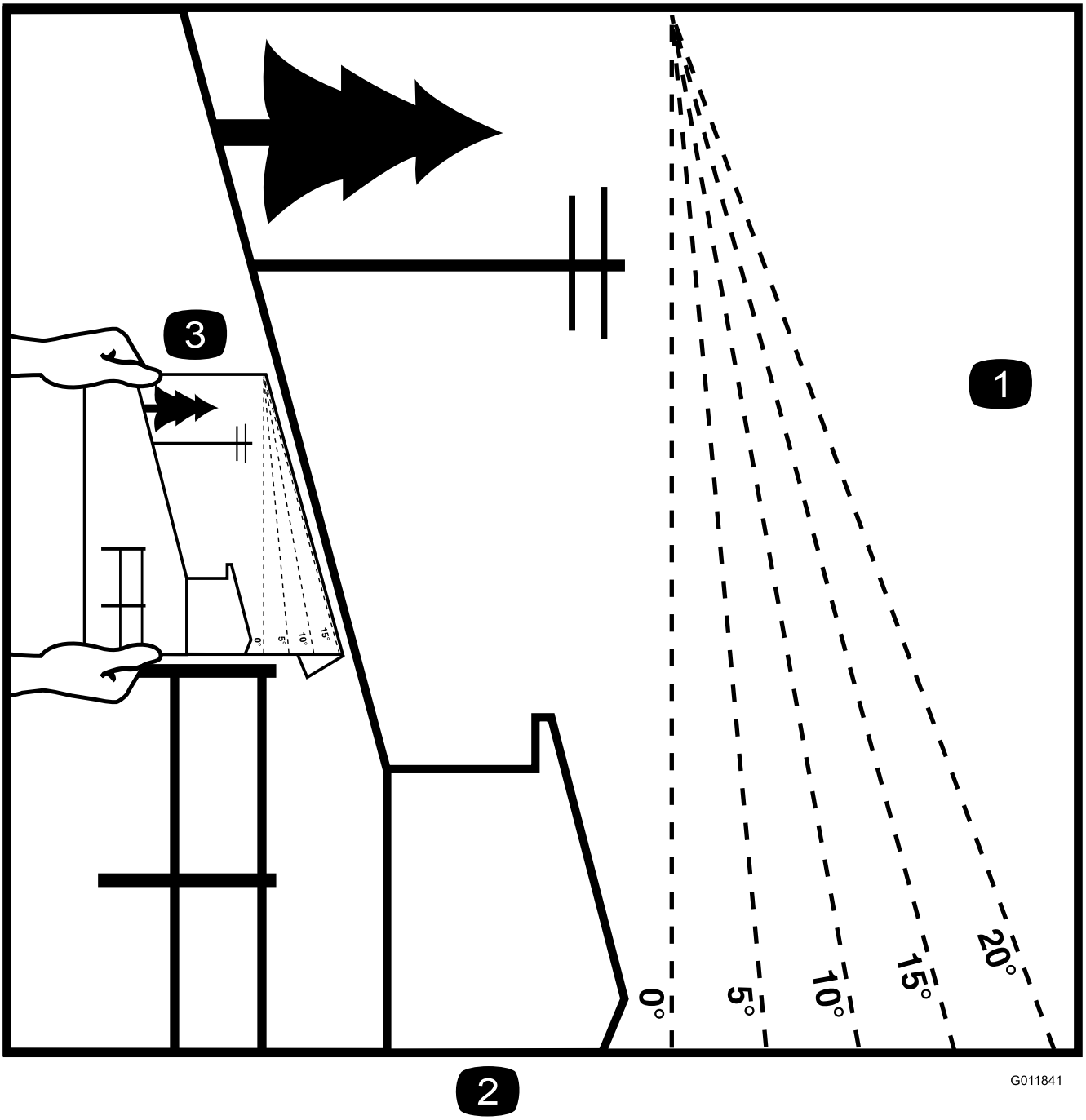

Figure 69

This page may be copied for personal use.

1. The maximum slope you can operate the machine on is **15 degrees**. Use the slope indicator to determine the degree of slope of hills before operating. **Do Not operate this machine on a slope greater than 15 degrees.** Fold along the appropriate line to match the recommended slope.
2. Align this edge with a vertical surface, a tree, building, fence pole, etc.
3. Example of how to compare slope with folded edge.

EXMARK ACCESSORIES AND OPTIONS*

MID-MOUNT RIDING ACCESSORIES AND OPTIONS

CUSTOM RIDE SEAT SUSPENSION SYSTEM
FULL SUSPENSION SEAT
DECK LIFT ASSIST KIT
HITCH KIT
LIGHT KIT
12V POWER PORT
MICRO-MULCH SYSTEM
OPERATOR CONTROLLED DISCHARGE
SUN SHADE
TRASH CONTAINER
TURF STRIPER
ULTRA VAC COLLECTION SYSTEM
ULTRA VAC QUICK DISPOSAL SYSTEM

OUT-FRONT RIDING ACCESSORIES AND OPTIONS

CUSTOM RIDE SEAT SUSPENSION SYSTEM
DUAL-TAIL WHEEL
FLOOR PAN EXTENDER
HITCH KIT
LIGHT KIT
MICRO-MULCH SYSTEM
ROLL OVER PROTECTION SYSTEM (ROPS)
SNOW BLADE
SNOWBLOWER
SUN SHADE
TRASH CONTAINER
ULTRA VAC COLLECTION SYSTEM
ULTRA VAC QUICK DISPOSAL SYSTEM
WEATHER CAB

WALK-BEHIND ACCESSORIES AND OPTIONS

GRASS CATCHER
MICRO-MULCH SYSTEM
TURF STRIPER
STANDON

*Some accessories and options not available for some models.

Place Model No. and Serial No. Label Here (Included in the Literature Pack) or Fill in Below

Model No. _____

Serial No. _____

Date Purchased _____

Engine Model No. and Spec. No. _____

Engine Serial No. (E/No) _____

©2024 Exmark Mfg. Co., Inc.
All Rights Reserved

415 Industrial Row
Beatrice, NE 68310
(402) 223-6300

Part No. 4507-400 Rev. B
Printed in the USA



www.exmark.com