PROPANE TANK TOP CONSTRUCTION HEATER

USER'S MANUAL AND OPERATING INSTRUCTIONS

MODELS: **TT15CL, TT30CL, TT15CDGP, TT30CDGP, TT15CPDG, TT30CPDG, TT1-15C, TT2-30C, TT15000M, TT30000M**

C US

ANS Z83.7-2017 CSA 2.14-2017

Adequate ventilation must be provided.

GHP Group, Inc.
6440 W Howard St
Niles, IL 60714-3302

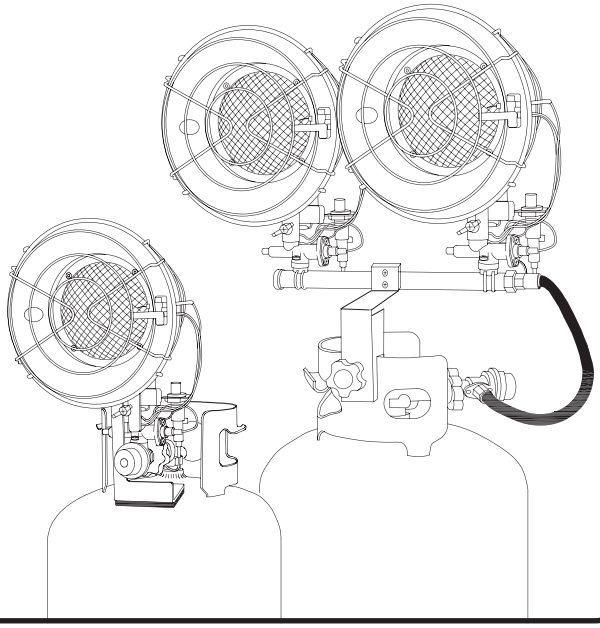

GENERAL HAZARD WARNING

FAILURE TO COMPLY WITH THE PRECAUTIONS AND INSTRUCTIONS PROVIDED WITH THIS HEATER, CAN RESULT IN DEATH, SERIOUS BODILY INJURY AND PROPERTY LOSS, OR DAMAGE FROM THE HAZARDS OF FIRE, EXPLOSION, BURN. ASPHYXIATION, CARBON MONOXIDE POISONING, AND/OR ELECTRICAL SHOCK.

ONLY PERSONS WHO CAN UNDERSTAND AND FOLLOW THE INSTRUCTIONS SHOULD USE OR SERVICE THIS HEATER.

IF YOU NEED ASSISTANCE OR HEATER INFORMATION SUCH AS AN INSTRUCTION MANUAL, LABELS, ETCETERA, CONTACT THE MANUFACTURER.

CONSUMER: Retain this manual for future reference.

Questions, problems, missing parts? Before returning to your retailer, call our customer service department at 877-447-4768 8:30 a.m. – 4:30 pm CST, Monday – Friday or email us at customerservice@ghpgroupinc.com
www.ghpgroupinc.com

Printed in China IMTTDG - MEG

TABLE OF CONTENTS

Propane Tank Top Construction Heater 3
Specifications 3
General Safety Instructions 4
Important Safety Information 4
Product Features 4
Ventilation 5
Air Quality Hazard 5
TT30 Series Heater Assembly 6
Wiring Diagram 7
Propane Supply 8
Refilling the Propane Gas Tank 8
Connecting Heater to Propane Tank 9-10
Checking for Leaks 11
Operation – Lighting Instructions when Using Match 11-12
Turning Off the Heater 13
Operation Lighting Instructions for Piezo Ignition Models 13-14
Turning Off the Heater 14
Lighting Under Wind Conditions 15
Storage 15
Maintenance Instructions 15
Troubleshooting 16
Replacement Parts 16-17
Warranty 19-20

WARNING: FIRE, BURN, INHALATION, AND EXPLOSION HAZARD, KEEP SOLID COMBUSTIBLES, SUCH AS BUILDING MATERIALS, PAPER OR CARDBOARD, A SAFE DISTANCE AWAY FROM THE HEATER AS RECOMMENDED BY THE INSTRUCTIONS.

NEVER USE THE HEATER IN SPACES WHICH DO OR MAY CONTAIN VOLATILE OR AIRBORNE COMBUSTIBLES, OR PRODUCTS SUCH AS GASOLINE, SOLVENTS, PAINT THINNERS, DUST PARTICLES OR UNKNOWN CHEMICALS.

WARNING

This product and the fuels used to operate this product (liquid propane), and the products of combustion of such fuels, can expose you to chemicals including benzene, which is known to the State of California to cause cancer and reproductive harm.
For more information go to www.p65Warnings.ca.gov

WARNING!
NOT FOR HOME OR RECREATIONAL VEHICLE USE.

NEVER LEAVE THE HEATER UNATTENDED WHILE BURNING!

PROPANE TANK TOP CONSTRUCTION HEATERS

The heater is designed and approved for use as a construction heater under ANSI Z83.7, CSA 2.14. It is hard to anticipate every use which may be made of this heater. **CHECK WITH YOUR LOCAL FIRE SAFETY AUTHORITY IF YOU HAVE QUESTIONS ABOUT APPLICATIONS.**

Other standards govern the use of fuel gases and heat producing products in specific applications. Your local authority can advise you about these.

IMPORTANT: READ THIS USER'S MANUAL CAREFULLY AND COMPLETELY BEFORE TRYING TO OPERATE OR SERVICE THIS HEATER. IMPROPER USE OF THIS HEATER CAN CAUSE SERIOUS INJURY OR DEATH FROM FIRE, EXPLOSION AND CARBON MONOXIDE POISONING.

This is a direct-fired tank top construction heater for either indoor construction or outdoor use. Its intended use is primarily the temporary heating of buildings or structures under construction, alteration or repair. All the products of combustion generated by the heater are forced through the heater and released into the area being heated. This heater operates at approximately 98%+ combustion efficiency but still produces a small amount of carbon monoxide. Humans can tolerate small amounts of carbon monoxide for short periods. Carbon monoxide can build up in a heated space and failure to provide adequate ventilation could result in poisoning or death.

SPECIFICATIONS

MODEL	BTU OUTPUT (high)	IGNITION TYPE	OPERATING TIME (20 lb. cylinder)
TT15CL	15,000	Match	28 Hrs. (high)
TT15CDGP	15,000	Match	28 Hrs. (high)
TT15CPDG	15,000	Piezo	28 Hrs. (high)
TT30CL	30,000	Match	14 Hrs. (high)
TT30CDGP	30,000	Match	14 Hrs. (high)
TT30CPDG	30,000	Piezo	14 Hrs. (high)

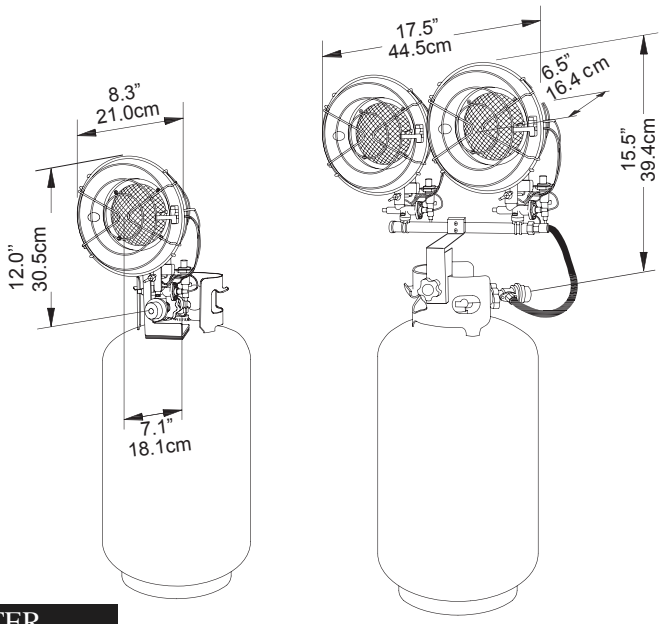

NEVER LEAVE THE HEATER UNATTENDED WHILE BURNING!

PROPANE TANK TOP HEATER

GENERAL SAFETY INSTRUCTIONS

Accidents are always tragic especially because so many of them could have been prevented with little care and judgment. There are some basic good practices, we hope you will follow for safe use of your heater.

IMPORTANT SAFETY INFORMATION

- Children should be carefully supervised, when they are in the area.
- Always maintain proper clearance from combustible materials. Minimum clearance from combustibles. Side & Rear: 36” (91cm); Top: 36” (91cm); Front: 60” (152cm); Floor: 0” when installed on 20lb cylinder.

Note: Not for use on finished floor.

- Heater must be placed on level and stable surface.
- Never place anything including clothes or other flammable items on the heater.
- The appliance area shall be kept clear and free from combustible materials, gasoline and other flammable vapours and liquids.
- Do not modify or operate a heater which has been modified.
- Adequate clearance for accessibility and for combustion & ventilation air supply must be maintained at all times when the heater is operating.
- Service and repair should be done by a qualified service person. The heater should be inspected before each use and at least annually by a qualified person. More frequent cleaning may be required as necessary. Do not service while hot or operating.
- Never connect heater to an unregulated gas supply.
- The heater is shipped from the factory for LP(Propane) gas. This heater is for use with propane gas only, do not convert heater to any other gas. Installation must conform to local codes or, in the absence of local codes, with the standard for the Storage and Handling of Liquefied Petroleum Gases ANSI/NFPA 58 and the Natural Gas and Propane Installation Code CSA B149.1.
- The minimum and maximum inlet pressures to the regulator from the gas tank are 17.5 psi and bottle pressure, respectively. Use only the regulator & hose assembly provided with the heater. Inspect the regulator/hose assembly prior to each use of the heater. If there is excessive abrasion or wear, or hose is cut, replace with regulator/hose assembly listed on the parts list prior to using this heater.
- Gas supply connections should be checked using a 50/50 solution of liquid dish soap and never use a flame to check for gas leaks.
- Do not restrict inlet or outlet by any means. The flow of combustion and ventilation air is not to be obstructed.
- This heater should not be directed toward any propane-gas container within 20 ft (6M). The heater must be located at least 6 ft. (1.83 m) in the U.S.; or (ii) 10 ft. (3 m) in Canada, from any other propane gas container.
- The propane cylinder supply system must be arranged to provide for vapour withdrawal from the operating cylinder.
- Installation of this Appliance at altitudes above 2000 ft. (610 m) shall be in accordance with local codes, or in the absence of local codes the, National Fuel Gas Code, ANSI Z223.1 / NFPA 54, or National Standard of Canada, Natural Gas and Propane Installation Code, CSA B149.1.

PRODUCT FEATURES

- Portable & Stable
- Wind Resistant & Rain Protected
- Match or Piezo Electric Spark Ignition
- 100% Safety Shutoff System
- Adjustable Input Ratings

NEVER LEAVE THE HEATER UNATTENDED WHILE BURNING!

PROPANE TANK TOP HEATER

VENTILATION

For either indoor or outdoor use. Adequate ventilation shall be provided in accordance with OSHA 29 CFR 1926.154, Safety Requirements for Temporary and Portable Space Heating Devices and Equipment ANSI A10.10, ANSI 223.1 / NFPA 54, Liquified Petroleum Gas Code, NFPA 58 or the National Gas and Propane Installation Code, CAN B149.1 as appropriate.

AIR QUALITY HAZARD

• Do not use this heater for heating human living quarters.
• Use of direct-fired heaters in the construction environment can result in exposure to levels of CO, CO2, and NO2 considered to be hazardous to health and potentially life threatening.
• Do not use in unventilated areas
• Know the signs of CO and CO2 poisoning
  - Headaches, stinging eyes
  - Dizziness, disorientation
  - Difficulty breathing, feels of being suffocated
• Proper ventilation air exchange (OSHA 29 CFR 1926.57) to support combustion and maintain acceptable air quality shall be provided in accordance with OSHA 29 CFR Part 1926.154, ANSI A10.10 Safety Requirements for Temporary and Portable Space Heating Devices and Equipment used in the Construction Industry or the Natural Gas and Propane Installation Codes CSA B149.1
  - Periodically monitor levels of CO, CO2 and NO2 existing at the construction site – at the minimum at the start of the shift and after 4 hours.
  - Provide ventilation air exchange, either natural or mechanical, as required to maintain acceptable indoor air quality

	USA 8-Hr Time weighted average (OSHA 29 CFR 1926.55 App A)	Canada 8-hr time weighted average WorkSafe BC OHS Guidelines Part 5.1 and Ontario Workplaces Reg 833
CO	50 ppm	25 ppm
CO_2	5000 ppm	5000 ppm
NO_2		3 ppm (Reg 833)

	USA – Ceiling Limit (Short Term Exposure Limit = 15 minutes)	Canada STEL (15 minutes Reg 833/1 hour WSBC) WorkSafe BC OHS Guidelines Part 5.1 and Ontario Workplaces Reg 833
CO		100 ppm
CO_2		15000 ppm (WSBC) 30000 ppm (Reg 833)
NO_2	5 ppm	1.0 ppm (WorkSafeBC) 5.0 ppm (Reg 833)

- Ensure that the flow of combustion and ventilation air exchange cannot become obstructed.
- As the building 'tightens up' during the construction phases ventilation may need to be increased.

NEVER LEAVE THE HEATER UNATTENDED WHILE BURNING!

PROPANE TANK TOP HEATER

TT30 SERIES HEATER ASSEMBLY

Tools Required:
Phillips head screwdriver

Estimated Assembly Time:
5 minutes

Contents:
Tank Top Heater (1)
Tank Collar Bracket (1)
M4x12 Machine Screws (2)

DUAL BURNER MODEL

The tank collar bracket must be assembled before the heaters can be attached to the propane tank.

1. Align bolt holes in tank collar bracket and piezo bracket with bolt holes in center plate on manifold.
2. Drive-in two machine screws (supplied) into the bolt holes attaching tank collar bracket to center plate on manifold. (Fig. 1)

FIGURE 1

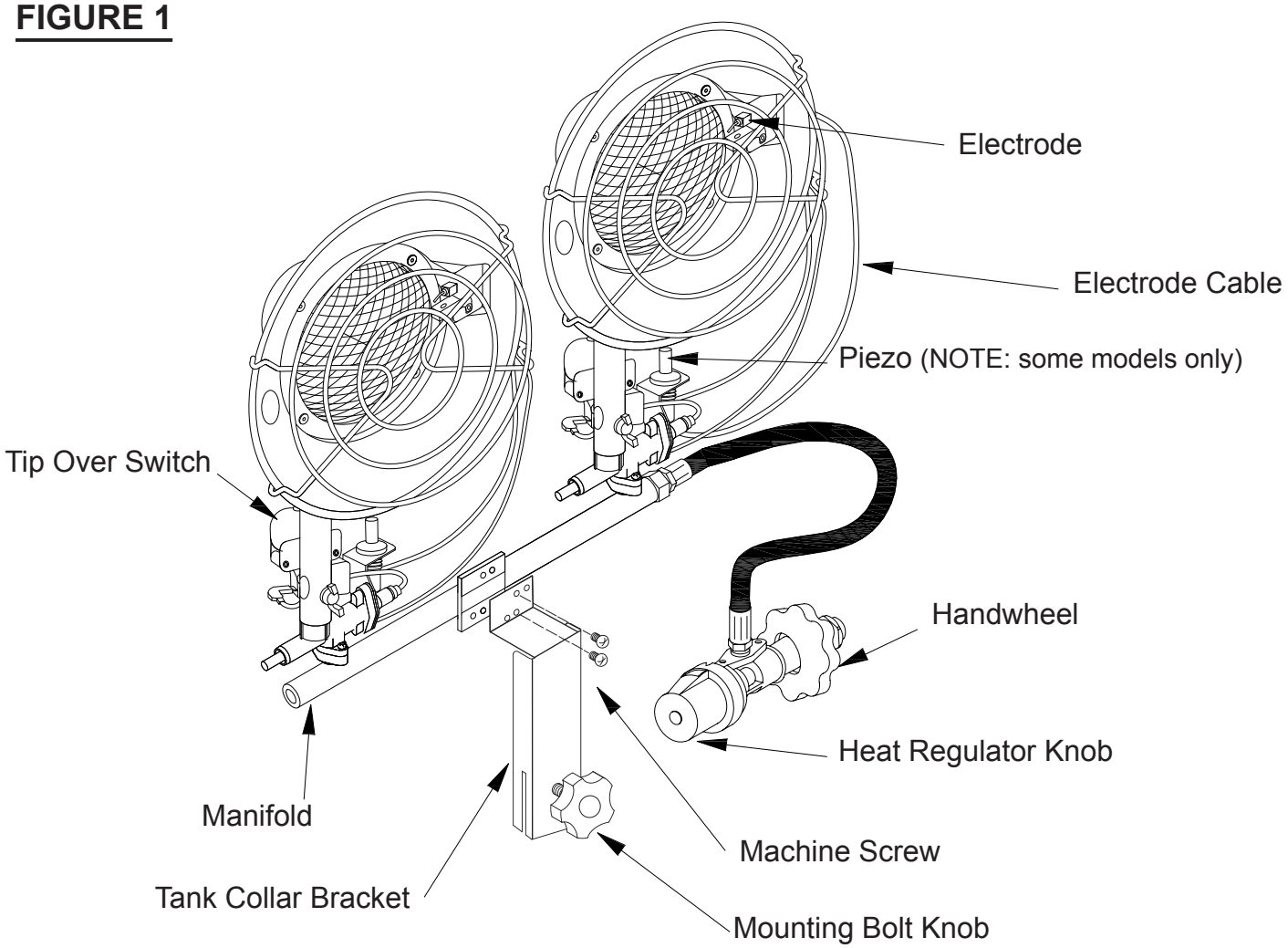

NEVER LEAVE THE HEATER UNATTENDED WHILE BURNING!

PROPANE TANK TOP HEATER

WIRING DIAGRAM

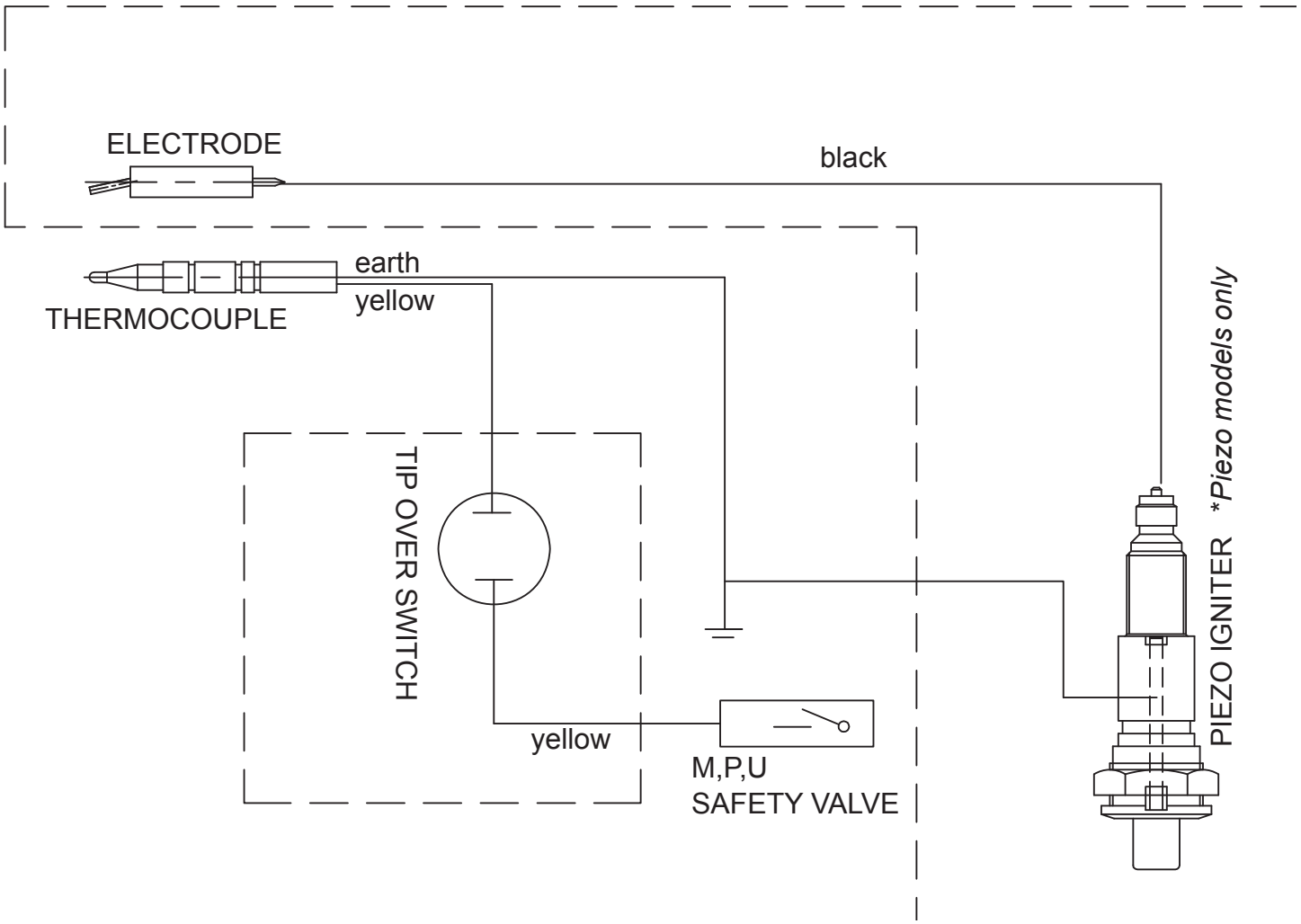

NEVER LEAVE THE HEATER
UNATTENDED WHILE BURNING!

PROPANE TANK TOP HEATER

PROPANE SUPPLY

This heater requires a 20 lb propane cylinder for operation. (Not included).

The propane (LP) gas tank must also be equipped with the following:

- A collar to protect the propane gas valve.
- A shutoff valve terminating a Propane gas cylinder valve outlet as specified in the American National Standard for Compressed Gas Cylinder Valve Outlet and Inlet Connections.
- A safety relief valve having direct communications with the vapor space of the tank.
- An arrangement of vapor withdrawal.

The propane (LP) gas pressure regulator and hose assembly of 30K BTU models supplied with the heater must be used without alteration.

The hose assembly shall be visually inspected prior to each use of the heater. If it is evident that there is excessive abrasion or wear, or the hose is cut, it must be replaced prior to the heater being put into operation. The replacement hose assembly shall be that specified by the manufacturer.

REFILLING THE PROPANE GAS TANK

ALL NEW CYLINDERS MUST BE PURGED BEFORE THE FIRST FILLING.

- Turn heater gas valve knob and gas tank valve to OFF position.
- Propane tank valve equipped with the old style fitting has LEFT HANDED THREADS. Turn POL fitting CLOCKWISE to loosen. Protect POL fitting when disconnected from tank.
- Have tank filled by your local Propane gas supplier.
- Some propane tanks have a bleed-off valve. This valve should be inspected for leaks after each filling of the tank. Turn clockwise to close the valve.
- Fasten full Propane tank and connect POL fitting to tank valve by turning COUNTERCLOCKWISE.
- With heater gas valve knob still in the OFF position, turn ON tank valve and check for leaks with soap solution.

Propane is safe to use when properly handled. Careless handling of the Propane gas tank could result in fire and/or an explosion. Therefore:

- Always keep tank/cylinder securely fastened in an upright position.
- Avoid tipping tank on its side when connected to a regulator since this may cause damage to diaphragm in regulator.
- Handle valves with care.
- Never connect an unregulated Propane tank to construction heater.
- Do not subject Propane tank to excessive heat.
- Tightly close the gas shutoff valve on the Propane tank after each use.
- The POL fitting must be protected when disconnected from the propane tank.
- Never store a Propane gas tank inside a building or in the vicinity of any gas burning appliance.

THE DISCONNECTED TANK MUST NEVER BE STORED IN A BUILDING, GARAGE OR ANY OTHER ENCLOSED AREA.

NEVER LEAVE THE HEATER UNATTENDED WHILE BURNING!

PROPANE TANK TOP HEATER

CONNECTING HEATER TO PROPANE TANK

Read and understand all safety information before connecting heater to propane tank.

1. (Applies to dual burner models only). Place heater onto tank with tank collar bracket over tank collar (Fig. 1) Mounting bolt knob should be positioned to the outside of tank collar and be positioned as closely as possible directly opposite to the cylinder valve outlet. See Figures 1 and 2.

2. (Applies to dual burner models only). Firmly secure to tank by hand-tightening mountingbolt knob. Do not overtighten mounting bolt knob.

3. Make sure heater regulator knob is in the OFF ◯ position.

4. Insert regulator's connector into tank's valve outlet fitting and turn left (counterclock-wise) until fully tightened. Threads are left-handed. (Figure 3.)

NOTE: Heater features a hand wheel that can be used to tighten the fitting to the cylinder. No wrench required.

NOTE: The vertical stem of this heater must be installed in the vertical position. This heater is equipped with a safety shutoff switch in the event that the heater is tipped over during operation. The heater may fail to remain lit if the vertical stem is not installed vertically.

5. For single burner models loosen the wing bolt securing the support leg and position it firmly on the surface of the cylinder. Tighten wing bolt firmly.

6. Open propane tank valve slowly by turning counterclockwise ↶.

7. Check all fittings for leaks. Apply a 50/50 mixture of liquid soap and water to all joints. Bubbles forming show a leak. Correct all leaks at once.

⚠ **WARNING:** NEVER USE AN OPEN FLAME TO CHECK FOR LEAKS.

8. Always remove propane tank from heater after each use. Do not store heater while attached to propane tank.

NEVER LEAVE THE HEATER UNATTENDED WHILE BURNING!

PROPANE TANK TOP HEATER

CONNECTING HEATER TO PROPANE TANK

FIGURE 2

TT30 SERIES

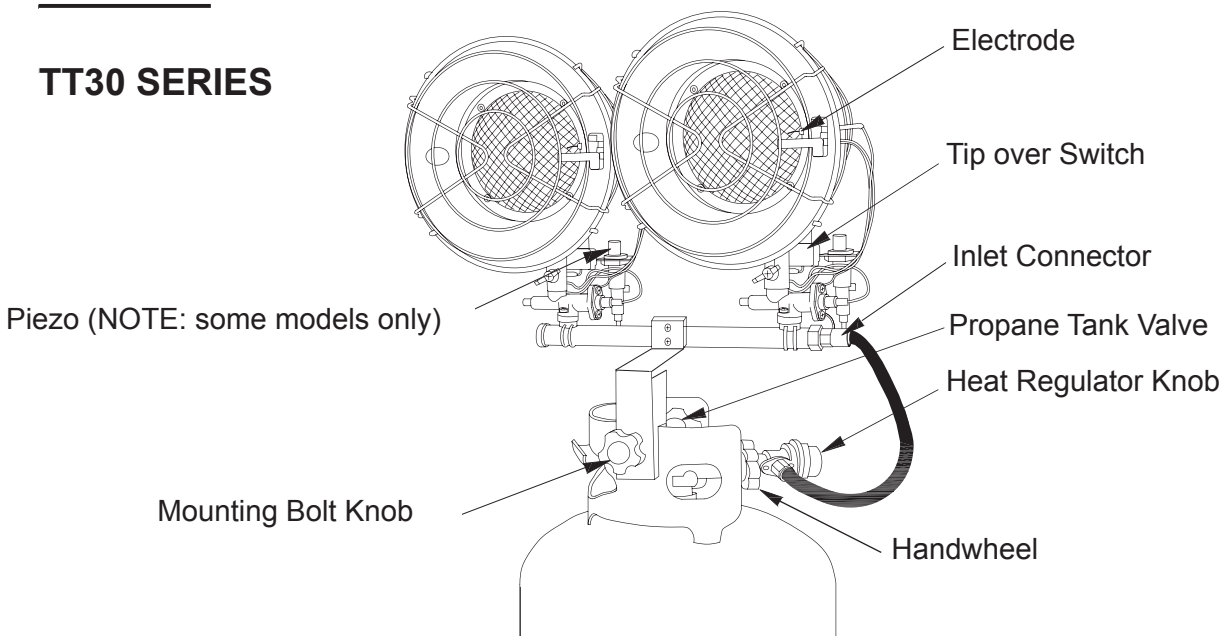

FIGURE 3

TT15 SERIES

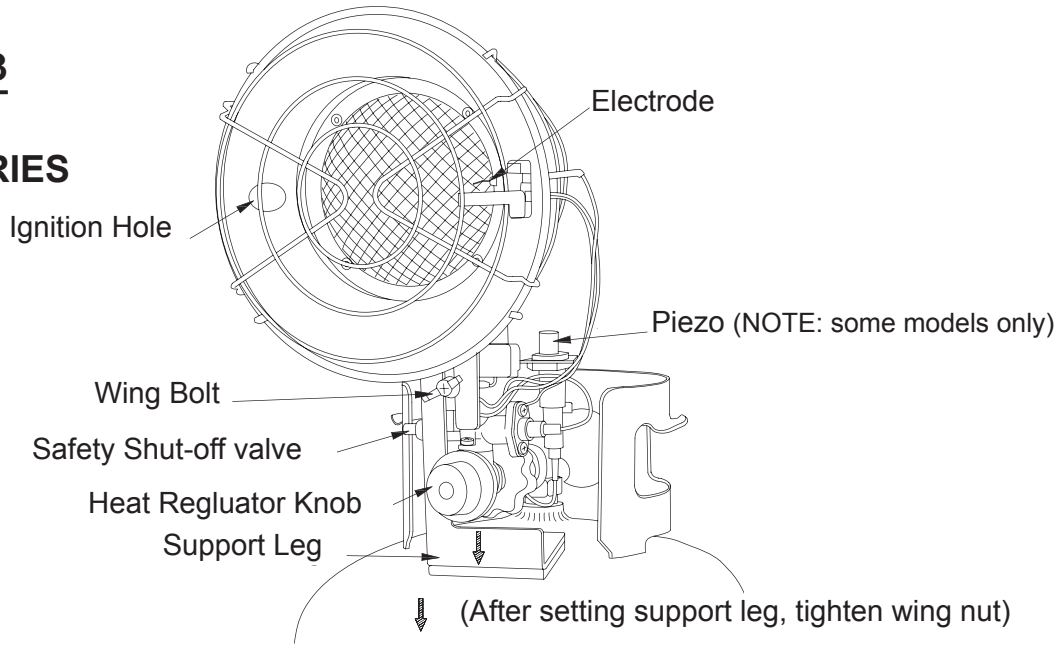

NEVER LEAVE THE HEATER UNATTENDED WHILE BURNING!

PROPANE TANK TOP HEATER

CHECKING FOR LEAKS

Check all gas connections with a 50/50 soap and water solution to be sure they are tight and leak proof. The formation of bubbles indicate a gas leak. Correct all leaks before using the heater.

- The installation of your heater must meet all local codes and/or gas utility requirements or, in the absence of local codes, with the Storage and Handling of Liquefied Petroleum Gases, ANSI/NFPA 58 and the Natural and Propane Installation Code, CSA B149.1.
- The minimum clearances to combustible construction: Side and Rear- 36” (91cm); Top - 36” (91cm); Front - 60” (150cm); Floor - combustible, must be maintained at all times. Not for use on finished floors.
- The hose assembly should be visually inspected prior to each use of the heater. If it is evident that there is excessive abrasion or wear, or the hose is cut, it must be replaced prior to the heater being put into operation.
- The replacement hose assembly shall be that specified by the manufacturer.

WARNING: Never use an open flame to check for leaks.

OPERATION - LIGHTING INSTRUCTIONS WHEN USING MATCH

Read and understand all safety information before operating heater.

WARNING: Burner and Burner Guard should always face away from propane tank shut-off and regulator.

WARNING: Improper installation, alteration, service or maintenance can cause property damage, injury or death.Read the installation, operating and maintenance instructions thoroughly before installing or servicing this equipment.

WARNING: Do not cover air inlet holes in mixing tube.

WARNING: Make sure there is no open flame in the area. Fully open the propane tank valve.

NEVER LEAVE THE HEATER UNATTENDED WHILE BURNING!

LIGHTING INSTRUCTIONS WHEN USING MATCH (CONTINUED)

1. Open Cylinder valve by turning counterclockwise ↶.

2. Turn heater regulator knob clockwise ↷ to the "High" (●●●) position. (Fig. 4)

WARNING: Stand to the side of unit while lighting. Do not stand or have any part of your body over or in front of heater while lighting.

3. Do not attempt to light one burner off of the other. Use one match per burner. Locate ignition hole in side of burner. (Fig. 5) Insert a lit match through ignition hole.

CAUTION: Do not insert match into air inlet holes in mixing tube.

4. Push in the safety shut-off valve plunger (Fig. 5)

WARNING: Do not push in safety shut-off valve plunger before inserting lit match.

5. **Once the burner is lit, continue to depress the valve plunger for <u>30 seconds</u> and then release. <u>Be careful not to shake the heater when releasing the plunger.</u>**

6. If the burner does not light within 10 seconds, turn regulator knob to the "OFF" (◯) position. Wait at least five (5) minutes for the gas to dissipate before relighting.

7. If heater will not light after repeated tries, do not attempt to repair heater. Return heater to nearest authorized service center or to the address on back of this manual, freight prepaid.

FIGURE 4

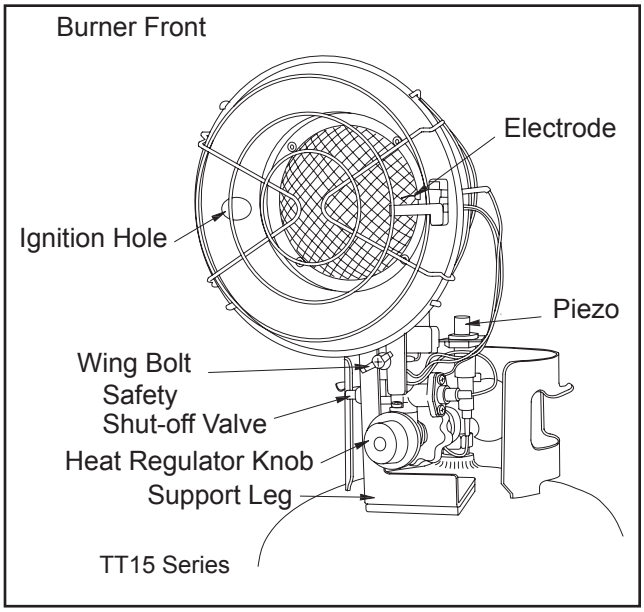

FIGURE 5

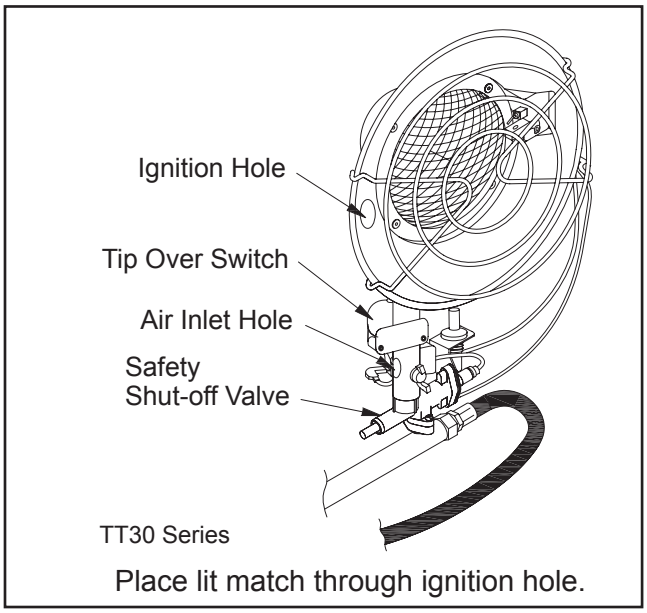

Place lit match through ignition hole.

8. After burner lights, turn the heater regulator knob to the desired heat setting "LOW" (●), "MED" (●●), or "HIGH" (●●●).

9. For dual burner models only : Light both burners when maximum heat is needed. Use one burner to conserve fuel. Repeat steps to light second burner.

NEVER LEAVE THE HEATER UNATTENDED WHILE BURNING!

PROPANE TANK TOP HEATER

TURNING OFF THE HEATER

1. Tightly close propane tank valve by turning fully clockwise ↷.

2. Turn the heater regulator knob to the “OFF” (○) position. Wait at least 30 minutes for the heater to cool before handling heater.

3. Always remove the heater from the propane tank after each use and store indoors. Do not store heater while attached to propane tank. Do not store propane cylinders in a building, garage or any other enclosed area.

VENTILATION
Always be sure to supply proper ventilation while operating this heater.
Provide a minimum of 1/2 square foot opening for fresh air supply for 15,000 BTU’s of heat and one square foot opening for 30,000 BTU’s of heat.

OPERATION - LIGHTING INSTRUCTIONS FOR PIEZO IGNITION MODELS

Read and understand all safety information before operating heater.

WARNING: Burner and Burner Guard should always face away from propane tank shut-off and regulator.

WARNING: Improper installation, alteration, service or maintenance can cause property damage, injury or death.Read the installation, operating and maintenance instructions thoroughly before installing or servicing this equipment.

WARNING: Do not cover air inlet holes in mixing tube.

WARNING: Make sure there is no open flame in the area.
Fully open the propane tank valve.

NEVER LEAVE THE HEATER UNATTENDED WHILE BURNING!

PROPANE TANK TOP HEATER

LIGHTING INSTRUCTIONS FOR PIEZO IGNITION MODELS (CONTINUED)

1. Stop! Read all safety information first.

2. Open cylinder valve by turning counterclockwise ↶.

WARNING: Stand to the side of unit while lighting. Do not stand or have any part of your body over or in front of heater while lighting.

3. Turn heater regulator knob counterclockwise ↶ to "OFF" (○) position.

4. Wait five (5) minutes to clear out any gas. Then smell for gas, including near the floor. If you smell gas, STOP! Follow the safety information on the tag attached to the heater. If you do not smell gas, go to the next step.

5. Turn heater regulator knob clockwise ↷ to "High" (●●●) position. Press in safety shut-off valve plunger. (Fig. 5)

6. With safety shut-off valve plunger pressed in, immediately push down and release piezo ignitor button repeatedly. This will light the burner.

7. **Once the burner is lit, continue to depress the valve plunger for <u>30 seconds</u> and then release. <u>Be careful not to shake the heater when releasing the plunger.</u>**

8. If burner goes out, repeat steps 5 through 7 or use a match. If heater will not light after repeated attempts do not attempt to repair heater.

9. When burner is lit, turn heater regulator knob to desired heat setting "LOW" (●), "MED" (●●), or "HIGH" (●●●).

10. On dual burner models light both burners when maximum heat is needed. Use one burner to conserve fuel.

TURNING OFF THE HEATER

1. Tightly close propane tank valve by fully turning clockwise ↷.

2. Turn the heater regulator knob to the "OFF" (○) position. Wait at least 30 minutes for the heater to cool before handling heater.

3. Always remove the heater from the propane tank after each use and store indoors. Do not store heater while attached to propane tank. Do not store propane cylinders in a building, garage or any other enclosed area.

VENTILATION
Always be sure to supply proper ventilation while operating this heater.
Provide a minimum of 1/2 square foot opening for fresh air supply for 15,000 BTU's of heat and one square foot opening for 30,000 BTU's of heat.

NEVER LEAVE THE HEATER UNATTENDED WHILE BURNING!

PROPANE TANK TOP HEATER

LIGHTING UNDER WIND CONDITIONS

When using this heater outdoors on a windy day, it will be necessary to use a match or long stem butane lighter to ignite the burner. It may be difficult to keep the match lit long enough under windy conditions. Follow the “Lighting instructions when Using a Match” procedure after doing the following:

1. Position the heater and cylinder such that the burner faces away from the wind.

2. Position your body behind the heater such that your body blocks the wind while you are following the instructions for lighting with a match.

STORAGE

Never store a Propane gas tank inside a building or in the vicinity of any gas or oil burning appliance. Always remove the heater from the propane tank after each use and store indoors. Do not store heater while attached to propane tank. Do not store propane cylinders in a building, garage or any other enclosed area. The tank must be disconnected and stored outdoors in a well ventilated area out of reach of children, in accordance with the standard for the the Storage and Handling of Liquefied Petroleum Gases, ANSI / NFPA 58 and CSA B149.1, Natural Gas and Propane Installation Code. The plastic tank valve plug supplied with your tank must be tightly installed when the tank is disconnected from the heater.

MAINTENANCE INSTRUCTIONS

1. Turn unit off, allow heater to fully cool and disconnect propane hose before performing any Maintenance functions.

2. Keep unit clean and keep the inside of the unit debris free.

3. Have unit checked by a qualified technician at least once a year, preferably prior to the heating season.

NEVER LEAVE THE HEATER UNATTENDED WHILE BURNING!

PROPANE TANK TOP HEATER

TROUBLESHOOTING

PROBLEM	POSSIBLE CAUSE	CORRECTIVE ACTION
1. Unit will not light.	1. Valve on propane cylinder not open. 2. Propane cylinder empty 3. Regulator not in "High" position 4. Excess flow device triggered. 5. Defective Regulator.	1. Open cylinder valve by turning counterclockwise. 2. Have cylinder refilled. 3. Turn regulator to "High" position. 4. Close cylider valve, wait 5 minutes and reopen slowly. 5. Replace Regulator assembly.
2. Burner will not stay lit when gas valve plunger released.	1. Tilt switch open 2. Wiring of thermocouple 3. Defective thermocouple 4. Defective tilt switch 5. Defective gas valve	1. Correct alignment of unit to ensure it is vertical. 2. Check wiring connections are properly engaged. 3. Replace thermocouple. 4. Replace tilt switch. 5. Replace gas valve assembly.
3. Excessive flames coming out of burner, not glowing red.	1. Debris or spider webs in mixing tube or burner. 2. Clogged orifice	1. Clean burner tube with bottle brush, rinse in water and drain thoroughly before reintsalling. 2. Remove and clean using compressed air.
4. Piezo won't spark. (Some models only)	1. Defective piezo 2. Ignitor misaligned with Thermocouple shield 3. Wire frayed or damaged.	1. Replace Piezo 2. Realign ignitor with thermocouple shield. 3. Replace wire.
5. Flames flashback/burn inside the mixing tube	1. Debris or spider webs in mixing tube. 2. Clogged orifice	1. Clean burner tube with bottle brush, rinse in water and drain thoroughly before reintsalling. 2. Remove and clean using compressed air.

REPLACEMENT PARTS LIST

ITEM	DESCRIPTION	Part Number			
		TT15CPDG	TT15CL/TT15CDGP TT1-15C, TT15000M	TT30CPDG	TT30CL/TT30CDGP TT2-30C, TT30000M
1	Regulator Assembly	GR-121	GR-121	GR-121	GR-121
2	Burner Assembly	TT15-00-01	TT15-00-01	TT15-00-01	TT15-00-01
3	Thermocouple Assembly	TT15C-11	TT15C-11	TT15C-11	TT15C-11
4	Guard Assembly	TT15C-03	TT15C-03	TT15C-03	TT15C-03
5	Rear Guard Assembly	TT15C-04	TT15C-04	TT15C-04	TT15C-04
6	Safety Shut-off Valve	GS13	GS13	GS13	GS13
7	Manifold	--	--	K-80D-A5-02	K-80D-A5-02
8	Piezo Assembly	GL-007	--	GL-007	--
9	Tank Collar Bracket	--	--	TT30C-02	TT30C-02
10	Mounting Bolt Knob	--	--	TT30C-3	TT30C-3
11	Gas Hose	--	--	GDH1	GDH1
12	Handwheel	QG-010-01	QG-010-01	QG-010-01	QG-010-01
13	Electrode	TT15C-14	--	TT15C-14	--
14	Tip Over Switch	KW-16B	KW-16B	KW-16B	KW-16B
15	Support Leg	TT15C-02	TT15C-02	--	--

NEVER LEAVE THE HEATER UNATTENDED WHILE BURNING!

PROPANE TANK TOP HEATER

REPLACEMENT PARTS ILLUSTRATION

TT15 SERIES

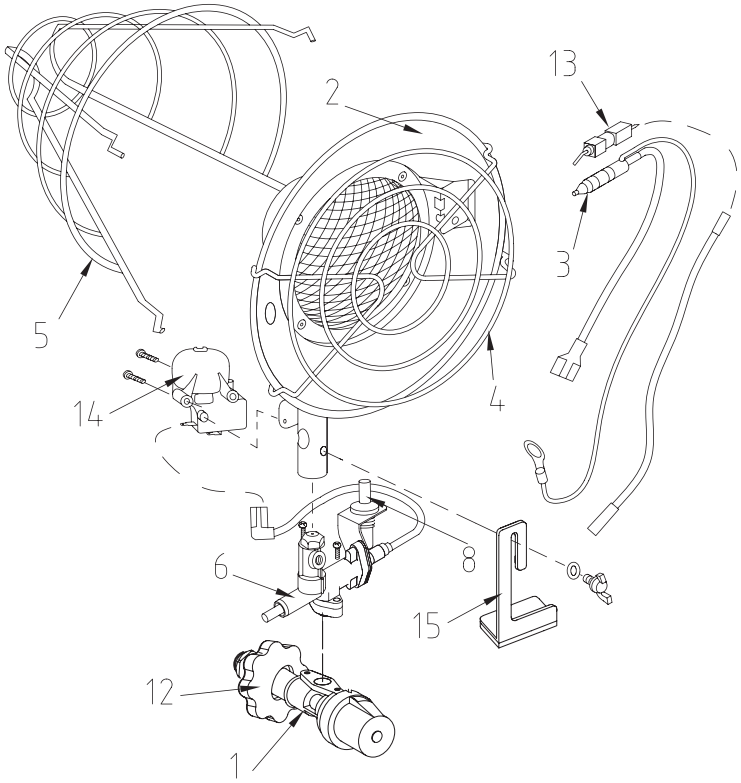

TT30 SERIES

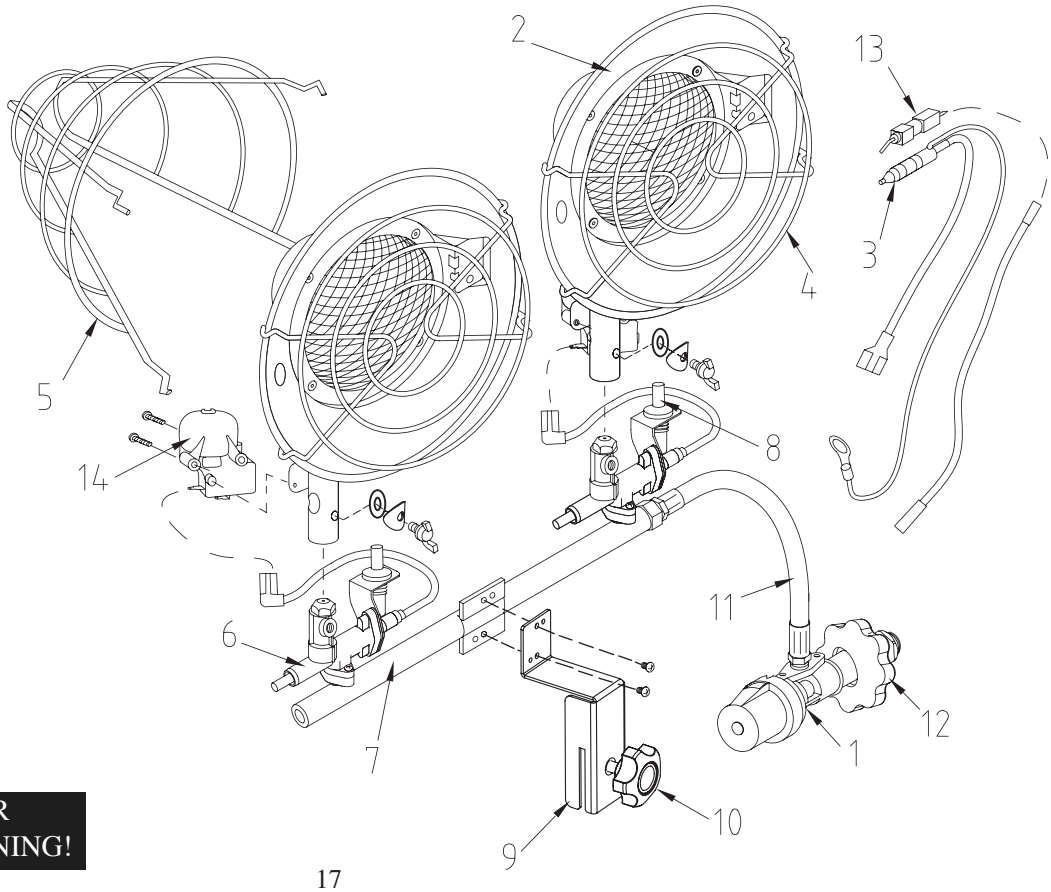

NEVER LEAVE THE HEATER UNATTENDED WHILE BURNING!

THIS PAGE INTENTIONALLY LEFT BLANK.

WARRANTY

LIMITED WARRANTY:

This limited warranty is extended to the original retail purchaser of this Forced Air/Convection/Radiant Heater and warrants against any defect in materials and workmanship for a period of one (1) year from the date of retail sale. GHP Group, Inc., at it's option, will either provide replacement parts or replace or repair the unit, when properly returned to the retailer where purchased or one of our service centers as directed by GHP Group, Inc., within one (1) year of retail purchase. (Shipping costs, labour costs, etc. are the responsibility of the purchaser.)

DUTIES OF THE OWNER:

This heating appliance must be operated in accordance with the written instructions furnished with this heater. This warranty shall not excuse the owner from properly maintaining this heater in accordance with the written instructions furnished with this heater. A bill of sale, canceled check or payment record must be kept to verify purchase date and establish warranty period. Original carton should be kept in case of warranty return of unit.

WHAT IS NOT COVERED:

1. Damage resulting from use of improper fuel.
2. Damage caused by misuse or use contrary to the owners manual and safety guidelines.
3. Damage caused by a lack of normal maintenance.
4. Fuses
5. Use of non-standard parts or accessories.
6. Damage caused in transit. Freight charges on warranty parts or heaters to and from the factory shall be the responsibility of the owner.

This warranty does not imply or assume any responsibility for consequential damages that may result from the use, misuse, or the lack of routine maintenance of this heating appliance. A cleaning fee and the cost of parts may be charged for appliance failures resulting from lack of maintenance. This warranty does not cover claims which do not involve defective workmanship or materials. **FAILURE TO PERFORM GENERAL MAINTENANCE (INCLUDING CLEANING) WILL VOID THIS WARRANTY.**

THIS LIMITED WARRANTY IS GIVEN TO THE PURCHASER IN LIEU OF ALL OTHER WARRANTIES, EXPRESSED OR IMPLIED, INCLUDING BUT NOT LIMITED TO THE WARRANTIES OF MERCHANTABILITY OF FITNESS FOR A PARTICULAR PURPOSE. THE REMEDY PROVIDED IN THIS WARRANTY IS EXCLUSIVE AND IS GRANTED IN LIEU OF ALL OTHER REMEDIES. IN NO EVENT WILL GHP GROUP, INC. BE LIABLE FOR INCIDENTAL OR CONSEQUENTIAL DAMAGES.

Some states do not allow limitations on how long an implied warranty lasts, so the above limitation may not apply to you. Some states do not allow the exclusion or limitation of incidental or consequential damages so the above limitation or exclusion may not apply to you.

CLAIMS HANDLED AS FOLLOWS:

1. Contact your retailer and explain the problem.
2. If the retailer is unable to resolve the problem, contact our Customer Service Dept. detailing the heater model, the problem, and proof of date of purchase.
3. A representative will contact you. DO NOT RETURN THE HEATER TO GHP GROUP,INC. unless instructed by our Representative. This warranty gives you specific legal rights and you may also have other rights which vary from state to state.

TO REGISTER THE WARRANTY ON YOUR HEATER, PLEASE FILL OUT THIS CARD COMPLETELY AND MAIL WITHIN 14 DAYS FROM DATE OF PURCHASE OR REGISTER ON-LINE AT www.ghpgroupinc.com

NAME: _____ PHONE: ( ) _____ EMAIL: _____
ADDRESS: _____ CITY: _____ STATE: _____ ZIP: _____
MODEL: _____ SERIAL #: _____ DATE PURCHASED: _____
DEALER PURCHASED FROM: _____ TYPE OF STORE: _____
CITY & STATE WHERE PURCHASED: _____ PRICE PAID: _____

Please Take a Minute To Give Us Your Answers To The Following Questions.

All Responses Are Used Solely For Market Research And Are Held In Strict Confidence.

Who primarily decided this purchase? ☐ Male ☐ Female ☐ 18-24 ☐ 25-39 ☐ 40-59 ☐ 60 and over
Purpose of Purchase? _____
Do you own any other portable heaters? ☐ Yes ☐ No If yes, type_____brand_____
How do you intend to use your new heater? ☐ Construction Site ☐ Farm ☐ Warehouse/Commercial ☐ Garage/Outbuilding ☐ Other
How did you become aware of this heater? ☐ In-Store Display ☐ Newspaper Ad ☐Magazine Ad ☐ Friend/Relative
☐ TV Commercial ☐ Store Salesperson ☐ Other _____
What made you select this heater? ☐ Style ☐ Size/Portability ☐ Price ☐ Package ☐ Brand ☐ Other _____
Do you: ☐ own ☐ rent Would you recommend this heater to a friend? ☐ Yes ☐ No
Please give us your comments:_____

THANK YOU FOR COMPLETING THIS FORM!
Information will be held confidential.

WARRANTY REGISTRATION

IMPORTANT: We urge you to fill out your warranty registration card within fourteen (14) days of date of purchase. You can also register your warranty on the internet at www.ghpgroupinc.com. Complete the entire serial number. Retain this portion of the card for your records.

GHP Group, Inc.
6440 W Howard St
Niles, IL 60714-3302

Tel: (877) 447-4768
www.ghpgroupinc.com

SAVE THIS CARD!

Place
Postage
Stamp
Here

GHP Group, Inc.
6440 W Howard St
Niles, IL 60714-3302