PRORUN®

60V MAXPOWER

Operator's Manual

CORDLESS LITHIUM-ION 42-INCH LAWN TRACTOR

MODEL: PLT60V42

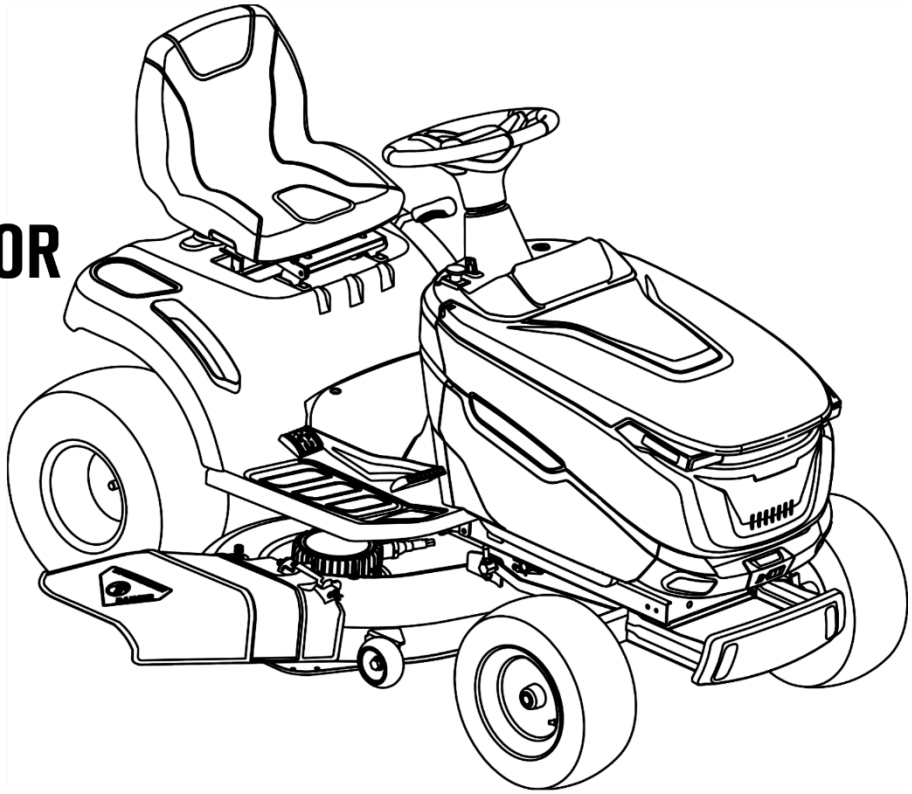

Everything PRORUN

Before charging, read the instructions.

⚠ **IMPORTANT - READ CAREFULLY BEFORE USE**

⚠ **IMPORTANT SAFETY INSTRUCTIONS – SAVE THESE INSTRUCTIONS**

WARNING: To reduce the risk of injury, the user must read and understand the Operator's Manual before using this product. Save these instructions for future reference.

Please let us know what you think.
To leave a review and see our full line of products, visit:

proruntools.com ★ ★ ★ ★ ★

1-844-905-0882, info@proruntech.com

Version: A - Issue Date: 2024/10/01

PRORUN

1. PRODUCT SPECIFICATIONS

Model	PLT60V42
Compatible Batteries	PB160100, PB16050
Battery Charger (Standard)	WTL6006PNG Input: 100-240V, 50/60Hz, Max. 5A Output: 60-85 V D.C., 1-6A, Max. 450W
Battery Charger (Rapid)	1200BG6018L Input: 120V, 50/60Hz, Max.7A Output: 60-72 V D.C., 1-12A, Max. 750W
Speed Forward (Max)	7.45 MPH (12 Km/h)
Cut Speed Forward (Max)	5.59 MPH (9 Km/h)
Speed Reverse	Up to 2.80 MPH (4.5 Km/h)
Tires Front/Tires pressure	17 PSI / 1.2 bars (15 x 6.0 - 6)
Tires Rear/Tires pressure	14.5 PSI / 1.0 bars (18 x 8.5 - 8)
Turning radius	19.68 inches (500 mm)
Length	66.7 inches (1695 mm)
Width	54.7 inches (1390mm)
Height	43.7 inches (1110 mm)
Weight	315 Lbs. (143 Kg)
Blade Rotation Speed	3200 min-1
Cutting Width	42.52 inches (1080 mm)
Mower Deck	Steel
Cutting Heights	1.18 to 3.54 inches (30 to 90 mm)
Blades (Qty)	2
Measured Sound Power Level LWA, dB(A)	94.75
Measured Sound Power Level KWA, dB(A)	0.99
Guaranteed sound power level LWA, dB(A)	100
Sound pressure level near ear LPA, dB(A)	82.1
Sound pressure level near ear KPA, dB(A)	3
Vibration – Handle (left / right), m/s2	1.89
Vibration – Main Body, m/s2	1.117
K, m/s2	1.5

- The declared vibration total value has been measured in accordance with a standard test method and may be used for comparing one machine with another.
- The declared vibration total value may also be used in a preliminary assessment of exposure.
- The vibration emission during actual use of the machine can differ from the declared total value depending on the ways in which the machine is used; and of the need to identify safety measures to protect the operator that are based on an estimation of exposure in the actual conditions of use (taking account of all parts of the operating cycle such as the times when the machine is switched off and when it is running idle in addition to the trigger time).

2. TABLE OF CONTENTS

1. PRODUCT SPECIFICATIONS.....2
2. TABLE OF CONTENTS.....3
3. GENERAL WARNINGS.....4
4. GENERAL SAFETY REGULATIONS.....5
5. SYMBOLS.....11
6. SET UP.....13
7. CONTROLS.....19
8. OPERATIONS.....24
9. MAINTENANCE.....32
10. STORAGE & TRANSPORT.....43
11. TROUBLESHOOTING.....45
12. PRODUCT DIMENSIONS.....50
13. WARRANTY AND COVERAGE.....51

3. GENERAL WARNINGS

⚠ WARNING! FOLLOW THESE INSTRUCTIONS CAREFULLY!

Before use, read and understand the installation and operation instructions in this manual to become familiar with how this lawn tractor works. Failure to follow all instructions listed below may result in electric shock, fire, and / or severe injury.

1. Always retain these operating instructions so that they can be consulted if you need any information about the machine.
2. Only pass the machine to other people together with these operating instructions.
3. Comply with the safety and warning information in these operating instructions.
4. The lawn tractors are supplied with various levels of equipment. Please note that the illustrations may differ from the original. Please contact PRORUN Customer Service if you encounter difficulties in following the descriptions.
5. Comply with the supplied assembly instructions.

⚠ DANGER! THIS MACHINE WAS BUILT TO BE OPERATED ACCORDING TO THE SAFE PRACTICES IN THIS MANUAL.

As with any type of power equipment, carelessness or error on the part of the operator can result in severe injury. This machine is capable of throwing objects and amputating fingers, hands, toes, and feet. Failure to observe the following safety instructions could result in severe injury or death. Non-observance will result in the risk of severe injury or death to oneself or others.

⚠ CAUTION! CAREFULLY READ THIS INSTRUCTION MANUAL COMPLETELY. ABIDE BY ALL THE "SAFETY REGULATIONS" BEFORE, DURING, AND AFTER USING THE MACHINE.

Keep this manual and all the attachments for any future consultation.

In case of any change in ownership, the manual must be handed over together with the machine.

HOW TO READ THE MANUAL

Some paragraphs in the manual containing valuable information regarding safety and operations are emphasized in the following ways.

⚠ DANGER! INDICATES A HAZARDOUS SITUATION WHICH, IF NOT AVOIDED, WILL RESULT IN DEATH OR SEVERE INJURY.

⚠ WARNING! INDICATES A HAZARDOUS SITUATION WHICH, IF NOT AVOIDED, COULD RESULT IN DEATH OR SEVERE INJURY.

⚠ CAUTION! INDICATES A HAZARDOUS SITUATION WHICH, IF NOT AVOIDED, COULD RESULT IN MINOR OR MODERATE INJURY.

NOTE ADDRESSES PRACTICES AND INFORMATION NOT RELATED TO PERSONAL INJURY

4. GENERAL SAFETY REGULATIONS

DESIGNATED USE

The tractor mower is intended for mowing in domestic gardens and properties with a Max Slope of 15°. Additional applications, such as for mulching, are only permitted if the original accessories are used and in compliance with the maximum load values. This appliance is intended solely for use in noncommercial applications. Any other uses (as well as unauthorized conversions or add-ons) are regarded as contrary to the intended use and will result in exclusion of the warranty. The manufacturer will thus decline any responsibility for damage and/or injury suffered by the user or third parties.

POSSIBLE MISUSE

The tractor mower is not designed for commercial use in public parks, sports grounds, agriculture, or forestry. Check the relevant road traffic regulations before driving the machine on a public road. When transporting the machine on another vehicle, always use approved cargo control tie downs and make sure that the machine is securely held.

⚠ WARNING! READ ALL SAFETY WARNINGS, INSTRUCTIONS, ILLUSTRATIONS, AND SPECIFICATIONS PROVIDED WITH THIS MACHINE.
Failure to follow all instructions listed below may result in electric shock, fire, and/or severe injury.

⚠ WARNING! WHEN USING ELECTRIC RIDING MOWERS, BASIC SAFETY PRECAUTIONS SHOULD ALWAYS BE FOLLOWED TO REDUCE THE RISK OF FIRE, ELECTRIC SHOCK, AND PERSONAL INJURIES.
Become familiar with the basic precautions outlined in the following pages.

1. **WORK AREA SAFETY**
- **Keep the work area clean and well-lit.** Cluttered or dark areas invite accidents.
- **Do not operate the machine in explosive atmospheres, such as in the presence of flammable liquids, gases, or dust.** The machine can create sparks which may ignite the dust or fumes.
- **Keep children and bystanders away while operating the machine.** Distractions can cause you to lose control.

2. **ELECTRICAL SAFETY**
- **Machine plugs must match the outlet. Never modify the plug in any way. Do not use any adapter plugs with grounded or earthed machines.** Unmodified plugs and matching outlets will reduce the risk of electric shock.
- **Avoid body contact with grounded or earthed surfaces, such as pipes, radiators, ranges, and refrigerators.** There is an increased risk of electric shock if your body is grounded or earthed.
- **Do not expose the machine to rain or wet conditions.** Water entering the machine will increase the risk of electric shock.
- **Do not abuse the cord. Never use the cord for carrying, pulling, or unplugging the machine. Keep all cords away from heat, oil, sharp edges, and moving parts.** Damaged or entangled cords increase the risk of electric shock.
- **When operating the machine outdoors, use an extension cord suitable for outdoor use.** The use of a cord suitable for outdoor applications reduces the risk of electric shock.
- **If operating the machine in a damp location is unavoidable, use a residual current device (RCD) protected supply.** Use of an RCD reduces the risk of electric shock.

3. **PERSONAL SAFETY**
- **Stay alert, watch what you are doing, and use common sense when operating the machine. Do not use the machine while you are tired or under the influence of drugs, alcohol, or medication.** A moment of inattention while operating machines may result in serious personal injury.
- **Use personal protective equipment. Always wear eye protection**. Protective equipment such as a dust mask, non-skid safety shoes, hard hat, or hearing protection used for appropriate conditions will reduce personal injuries.
- **Prevent unintentional starting. Ensure the switch is in the OFF position before transporting or connecting to any power source and / or battery pack.** Moving an energized machine or having your finger on the ON / OFF switch invites accidents and serious injuries.
- **Remove any tool, adjusting key, or wrench before turning the machine on**. A tool, wrench, or key left attached to a rotating part of the machine may result in personal injury.
- **Always keep proper sitting and balance.** This enables better control of the machine in unexpected situations.

- **Dress properly. Do not wear loose clothing or jewelry. Keep your hair and clothing away from moving parts.** Loose clothes, jewelry, or long hair can be caught in moving parts.
- **Do not let familiarity gained from frequent use of the machine allow you to become complacent and ignore correct safety principles.** A careless action can cause severe injury within a fraction of a second.

4. MACHINE USE AND CARE

- **Do not force the machine. Use the machine correctly for your applications.** The machine will do the job better and safer at the rate for which it was designed.
- **Do not use the machine if the switch does not turn it ON and OFF**. Any machine that cannot be controlled with the switch is dangerous and must be repaired.
- **Disconnect the plug from the power source and / or remove the battery packs from the machine before making any adjustments, changing accessories, or storing the machine.** Such preventive safety measures reduces the risk of starting the machine accidentally.
- **Store idle machines out of the reach of children, and do not allow people unfamiliar with the machine or these instructions to operate the machine.** Machines are dangerous in the hands of untrained users.
- **Maintain the machine and all accessories. Check for misalignment or binding of moving parts, breakage of parts, and any other condition that may affect the machine's operation. If damaged, have the machine repaired by a PRORUN-approved service center before use.** Many accidents are caused by poorly maintained machines.
- **Keep cutting tools sharp and clean.** Properly maintained cutting tools with sharp cutting edges are less likely to bind and are easier to control.
- **Use the machine, tool bits, and all accessories in accordance with these instructions, while considering the working conditions and the work application to be performed.** Use of the machine for operations different from those intended could result in a hazardous situation.
- **Keep handles and grasping surfaces dry, clean, and free from oil and grease.** Slippery handles, grasping, and standing surfaces do not allow for safe handling and control of the tool in unexpected situations.

5. BATTERY TOOL USE AND CARE

- **Recharge only with the manufactured specified charger.** A charger that is suitable for one type of battery pack may create a risk of fire when used with another battery pack.
- **Use the machine only with specifically designated battery packs.** Use of any other battery packs may create a risk of injury and fire.
- **When the battery pack is not in use, keep it away from other metal objects, such as paper clips, coins, keys, nails, screws, or other small metal objects that can make a connection from one terminal to another.** Shorting the battery terminals together may cause burns or a fire.
- **Under abusive conditions, liquid may be ejected from the battery. Avoid contact. If contact accidentally occurs, flush with water. If liquid contacts eyes immediately seek medical help.** Liquid ejected from the battery may cause irritation or burns.
- **Do not use a battery pack or tool that is damaged or modified.** Damaged or modified batteries may exhibit unpredictable behavior resulting in fire, explosion, or risk of injury.

- **Do not expose a battery pack or tool to fire or excessively high temperature.** Exposure to fire or temperatures above 266 °F (130 °C) may cause an explosion.
- **Follow all charging instructions and do not charge the battery pack or tool outside the temperature range specified in the instructions.** Charging improperly or at temperatures outside the specified range may damage the battery and increase the risk of fire.

6. SERVICE

- **Have your machine serviced by a PRORUN-approved repair person using only identical replacement parts**. This will ensure that the safety of the machine is maintained.
- **Never service damaged battery packs.** Service of battery packs should only be performed by the manufacturer or a PRORUN-approved service providers.

NOTE SAVE ALL WARNINGS AND INSTRUCTIONS FOR FUTURE REFERENCE.
The term "machine" in the warnings refers to your mains-operated (corded) machine or battery-operated (cordless) machine.

7. TRAINING

- Become acquainted with the controls and the proper use of the machine. Learn how to stop the machine quickly.
- Never allow the machine to be used by children or individuals who are not familiar with the instructions. Local laws may establish a minimum age for users.
- Do not allow children or other passengers to ride on the machine.
- Bear in mind that the user is responsible for accidents or unexpected events occurring to other people or their property. It is the user’s responsibility to assess the potential risk of the area where work is to be conducted and to take all the necessary precautions to ensure his own safety and that of others, particularly on slopes or rough, slippery, and unstable ground.
- This manual is an integral part of the machine, and therefore must always be accompanied by it, in the case of temporary or definitive transfer.

8. PRELIMINARY OPERATIONS
PERSONAL PROTECTIVE EQUIPMENT (PPE)

- Wear suitable clothing, strong work shoes with anti-slip soles, and long pants. Do not operate the machine barefoot or wear open sandals. Wear hearing protection devices.
- Use of hearing protection can reduce the ability to hear any warnings (shouting or alarms). Be careful of what occurs around you in the work area.
- Never wear scarves, necklaces, bracelets, loose flowing clothing, necklaces, ties, or any hanging or flapping accessory that could catch in the machine, or any element of the work area.
- Tie up long hair.

9. DURING OPERATION
WORK AREA

- Thoroughly inspect the entire work area and remove anything that could be thrown by the machine, or that could damage the cutting means / rotating units (stones, branches, iron wire, bones, etc.)

- Do not use the machine in environments that pose the risk of explosion, or in the presence of flammable liquids, gases, or powders. Electrical contact or mechanical rubbing can generate sparks that can ignite powder or vapor.
- Work only in daylight, or with good artificial light, in good visibility conditions.
- Keep people, children, and animals away from the work area. Another adult must supervise children.
- Avoid working with wet grass, in the rain, and when there is a risk of a thunderstorm or lightning.
- Pay careful attention to uneven ground (hills, dips), slopes, hidden hazards, and obstacles that could limit visibility.
- Be very careful near ravines, ditches, or embankments. The machine could overturn if a wheel slides over the edge or if the earth gives way.
- Pay close attention on sloping ground which requires special care to prevent overturning or loss of control of the machine. The main reasons for loss of control are:
  - Insufficient wheel grip.
  - Excessive speed.
  - Sharp changes of direction.
  - Inadequate braking.
  - Type of machine unsuitable for its task.
  - Lack of awareness of the effect of ground conditions.
  - Using the machine for towing.
  - Lack of awareness of traffic when using.

NOTE THE MACHINE DETAILED IN THIS MANUAL IS NOT DESIGNED FOR USE AS A TOWING VEHICLES.

10. CONDUCT

- When working behind the wheel, do not become distracted, and maintain the required level of concentration.
- Exercise caution when reversing or moving backwards. Look behind you to make sure there are no obstacles before and during operations in reverse travel.
- Pay careful attention when using the attachments that can alter the stability of the machine, especially on slopes.
- Always keep hands and feet away from the cutting blades, when starting and when using the machine.
- Keep hands and feet away from the seat support. There is the risk of crushing injuries

⚠ WARNING! THE CUTTING BLADES WILL CONTINUE TO ROTATE FOR A FEW SECONDS AFTER DISENGAGEMENT OR AFTER SWITCHING OFF THE MOTOR.

⚠ DANGER! IF SOMETHING BREAKS OR AN ACCIDENT OCCURS DURING WORK, TURN OFF THE MOTOR IMMEDIATELY AND MOVE THE MACHINE AWAY TO PREVENT FURTHER DAMAGE.
IF AN ACCIDENT OCCURS WITH INJURIES OR THIRD PARTIES ARE INJURED, CONDUCT THE FIRST AID MEASURES MOST SUITABLE FOR THE SITUATION IMMEDIATELY, AND CONTACT THE MEDICAL AUTHORITIES FOR ANY NECESSARY HEALTH CARE. Following the occurrence, be sure to carefully remove any debris which could cause damage or injury to persons or animals if ignored.

11. RESTRICTIONS OF USE

- NEVER use the machine with any damaged parts or accessories.
- NEVER disengage, deactivate, remove, or tamper with the safety systems or micro switches installed.
- DO NOT strain the machine too much and do not use the machine for inappropriate heavy-duty work. If you use the machine correctly, you will reduce the risk of hazards and improve the quality of your work.

⚠ WARNING! THE MACHINE HAS NOT BEEN TYPE-APPROVED FOR CIRCULATION ON PUBLIC ROADS. IT MUST BE USED (AS INDICATED BY THE HIGHWAY CODE) IN PRIVATE AREAS CLOSED TO TRAFFIC.

12. MAINTENANCE

Ensure regular maintenance and correct storage to maintain machine safety and high-performance levels.

- NEVER use the machine with worn or damaged parts. Faulty or worn-out parts must always be replaced and never repaired.
- Be careful during all adjustments of the machine to prevent entrapment of the fingers between moving cutting blades and fixed parts of the machine.
- Have your machine serviced by a PRORUN-approved service center using only identical replacement parts. This will ensure that the safety of the machine is maintained.
- Do not attempt to repair batteries. Repairs must be conducted by the manufacturer or by a PRORUN-approved service center.

⚠ CAUTION! THE NOISE AND VIBRATION LEVELS SHOWN IN THESE INSTRUCTIONS ARE THE MAXIMUM LEVELS WHEN USING THE MACHINE.
The use of an unbalanced cutting element, the excessive speed of movement, or the absence of maintenance has a considerable influence on noise emissions and vibrations. Consequently, it is necessary to take preventive steps to eliminate possible damage due to high levels of noise and stress from vibration; maintain the machine well, wear ear protection devices, and take breaks whilst working

13. STORAGE

- To reduce fire risks, do not leave containers with debris inside a room,

14. ENVIRONMENTAL PROTECTION

Protecting the environment must be a significant and top priority for machine use, to the benefit of civil co-habitation, and of the environment that we live in.

- Comply with local regulations for the disposal of packaging, deteriorated parts, or any elements with a strong environmental impact. This waste must not be disposed of with regular waste but must be separated and taken to collection centers for proper recycling.
- Comply with local regulations for the disposal of waste materials.
- When the machine is withdrawn from service, do not dispose of it in the environment, but take it to a waste disposal facility in accordance with local regulations.

5. SYMBOLS

This page depicts and describes safety symbols that may appear on this product. Read, understand, and follow all instructions on the machine before attempting to assemble and operate. The labels on the machine are to be considered an integral part of the machine. Should a label come off or become illegible, contact your dealer to replace it.

⚠ WARNING! YOUR RESPONSIBILITY - RESTRICT THE USE OF THIS POWER MACHINE TO PERSONS WHO READ, UNDERSTAND, AND FOLLOW THE WARNINGS AND INSTRUCTIONS IN THIS MANUAL AND ON THE MACHINE.

SAVE THESE INSTRUCTIONS!

SYMBOLS	MEANING
	**READ THE OPERATORS MANUAL(S)** Read, understand, and follow all instructions in the manual(s) before attempting to assemble and operate.
	**WARNING - ROTATING BLADES** Do not put hands or feet near rotating parts or under the cutting deck. Contact with the blade(s) can amputate hands and feet.
	**WARNING – EJECTED OBJECTS** This machine may pick up and throw objects which can cause personal injury.
	**WARNING - ELECTRIC SHOCK** Do not use the charger in the rain and do not run the mower with the charger plugged in. Do not operate the mower in rain or wet conditions.
	**BYSTANDERS** Keep bystanders, helpers, children, and pets at least 75 feet from the machine while it is in operation.
	**WARNING - SLOPE OPERATION** Do not operate this machine on a slope greater than 15 degrees. Do not trim horizontally on slopes greater than 10 degrees. Use extra caution on slopes. Do not use on slopes near open water

PRORUN

SYMBOLS	MEANING
	**DANGER - ROTATING BLADES** To reduce the risk of injury, keep hands and feet away. Do not operate unless discharge cover or grass catcher is in its proper place. If damaged, replace immediately.
	**DANGER - ROTATING BLADES** Never carry passengers. Never carry children, even with the blades off.
	**DANGER - ROTATING BLADES** To avoid a back-over accident, keep children away from the machine while it is in operation.
	**DANGER - ROTATING BLADES** Always look down and behind before and while backing up to avoid a back-over accident.
	**ATTENTION** Remove the key and read instructions before carrying out any maintenance or repair work
	**WARNING - FIRE HAZARD** Do not allow debris to accumulate as the buildup of the debris can lead to a fire.
	**WARNING - MOWERS STABILITY** The cargo box is not a seat. Do not allow anyone to sit or stand on the cargo box. The storage area has a maximum weight capacity of 20 pounds. Do not overload the cargo box as it may damage the machine and affect its stability.
	**WARNING - FIRE HAZARD** Never use pressure lances to wash the transmission system.

Any damaged or illegible decals must be replaced. Order replacement decals from a PRORUN-authorized service center.

Write the identification data of the machine on the back of the operator's manual for your records.

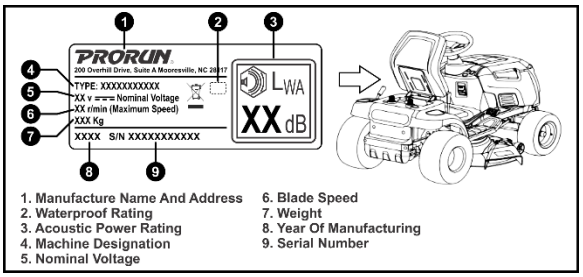

6. SET UP

UNPACKING AND ASSEMBLY

OPENING THE PACKAGING

1. The machine is shipped partially dismantled and packaged in a crate to protect it during transport. The packaged machine will appear as in Fig 1A.
2. Remove all shrink wrap and cut the plastic straps that surround the package.
3. Lift off the corrugated exterior cover assembly and discard the wooden support posts. Refer to Figure 1B.

Fig 1A

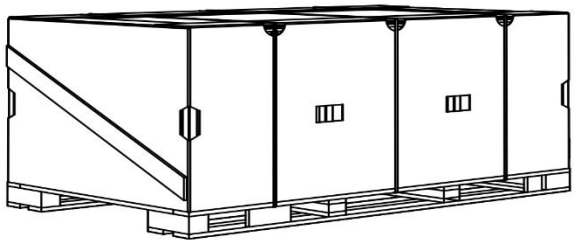

Fig 1B

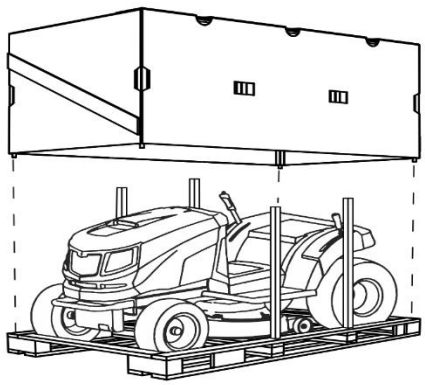

⚠ CAUTION! WEAR HEAVY GLOVES.

NOTE TO PREVENT DAMAGE TO THE CUTTING DECK, RAISE IT TO ITS MAXIMUM HEIGHT AND TAKE EXTREME CARE WHEN TAKING THE MACHINE OFF THE PALLET.

PACKAGE CONTENTS

When unpacking the machine, take care to gather all individual parts and fittings, and do not damage the cutting deck when taking the machine off the pallet.

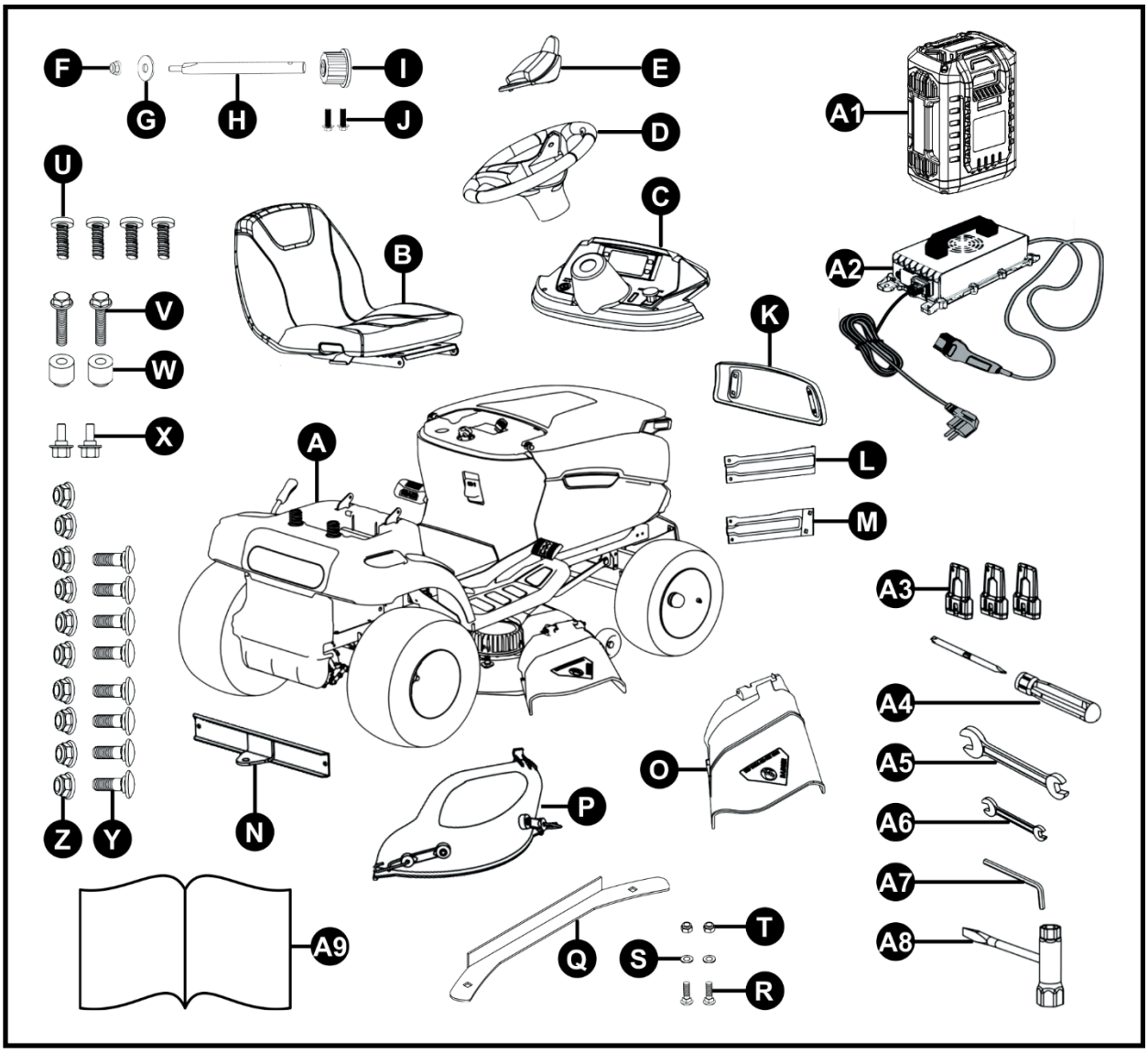

PART	DESCRIPTION
A	60V LAWN TRACTOR
B	SEAT
C	INSTRAMENT PANEL
D	STEERING WHEEL
E	STEERING WHEEL COVER
F	NUT (M8)
G	SPACER
H	STEERING SHAFT
I	SPLINED HUB
J	BOLTS (M8 X 25)
K	BUMPER
L	BUMPER BRACKET (LEFT)
M	BUMPER BRACKET (RIGHT)
N	REAR HITCH BRACKET
O	SIDE DEFLECTOR
P	MULCH KIT
Q	DECK REINFORCEMENTT PLATE
R	BOLT (M6 X 16)

PART	DESCRIPTION
S	WASHER (M6)
T	NUT (M6)
U	SELF-TAPPING SCREW (ST4.8 X 8)
V	BOLT (M8 X 40)
W	BEARING (ϕ20 X ϕ8.5 X 20.5)
X	SEAT SET BOLTS (M8)
Y	BOLTS (M8)
Z	NUTS (M8)
A1	60V BATTERY
A2	BATTERY CHARGER
A3	SAFETY KEYS
A4	SCREW DRIVER
A5	MULT-TOOL SCRENCH (13 – 19mm)
A6	OPEN-END WRENCH (13 - 15mm)
A7	ALLEN WRENCH
A8	OPEN-END WRENCH (8 – 10mm)
A9	OPERATOR'S MANUAL

STEERING SHAFT ASSEMBLY

1. Inset the Steering Shaft (1) into the tractor's Steering Coupler (2) and tighten the M8 X 25 screw (3).
2. Finalize assembly by tightening the other M8 X 25 screw (3).

Refer to Figure 2.

Fig 2

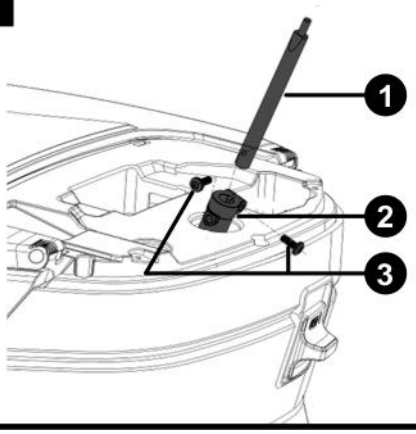

STEERING WHEEL ASSEMBLY

a. Connect the two Instrument Panel Connectors to each other (1).
b. Fit the Instrument Panel (3) over the Shaft (2). Tighten the two ST4.8 x 16 Screws (4).
c. Attach the Splined Hub (5) onto Shaft (2).
d. Mount the Steering Wheel (7), Spacer Washer (8), and tighten assembly with the M8 Nut (9).
(Use the enclosed open-end wrench)
e. Mount the Steering Wheel Cover (10) into the Steering Wheel (7) and tighten the assembly with the two ST4.8 x 16 Screws (6).
(Use the enclosed screwdriver)

Refer to Figure 3.

Fig 3

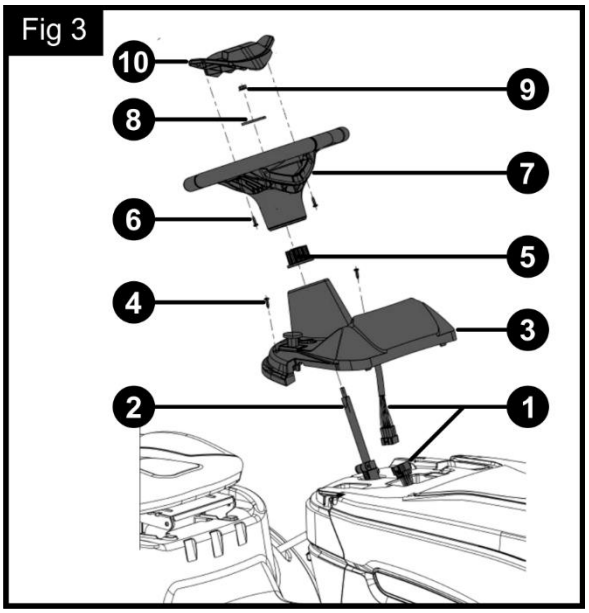

NOTE PAY ATTENTION TO THE DIRECTION OF THE FRONT WHEELS WHEN MOUNTING THE STEERING WHEEL.

SEAT ASSEMBLY

1. Insert the Seat (1) into the Seat Brackets (welded in the frame).
2. Insert and tighten the two sets of Seat Bolts (2) and M8 Nuts (3)
(Use the enclosed open-end wrench).

Refer to Figure 4.

Fig 4

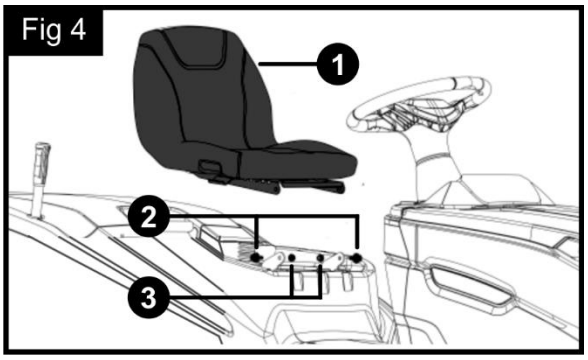

3. Connect the Electrical Wire Harness connector (4) to the Seat Switch connector (4) located under the seat.

Refer to figure 5.

Fig 5

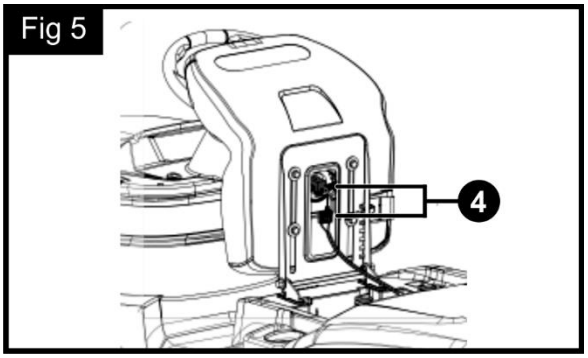

FRONT BUMPER ASSEMBLY

1. Mount the left Bumper Bracket and the right Bumper Bracket onto the Bumper utilizing the four M8 Nuts and Bolts. (Use the enclosed open-end wrench).

Refer to Figure 6.

Fig 6

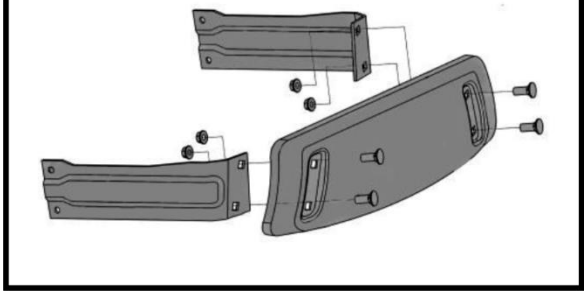

2. Mount the front Bumper Assembly onto the bottom of the frame using the four M8 Nuts and Bolts. (Use the enclosed open-end wrench).

Refer to Figure 7.

Fig 7

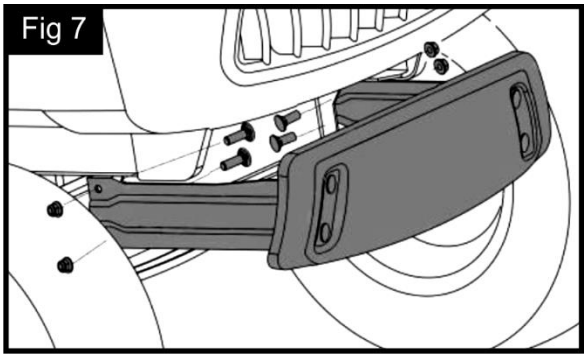

SIDE DEFLECTOR ASSEMBLY

1. Insert the Pin Clip (1) and Washer (2) onto the right end of the Pivot Rod (3).
2. Insert the Pivot Rod assembly into the Side Deflector's sockets (4), through the bracket on the Cutting Deck (6), and through the Torsion Spring (5) as illustrated in Figure 8.
3. Finalize the assembly by inserting the other Washer (2) and Pin Clip (1) at the opposite end.

Refer to Figure 8.

Fig 8

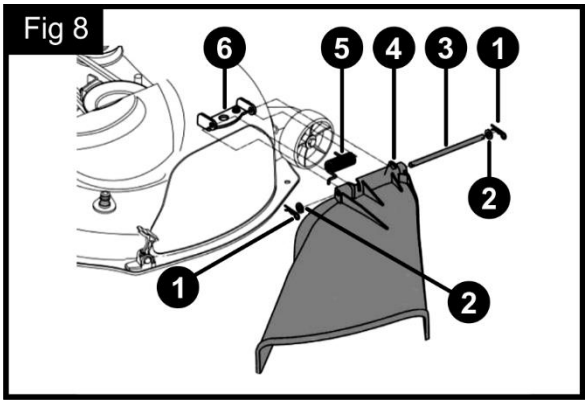

⚠ WARNING! TO PREVENT THE RISK OF INJURYDO NOT OPERATE OR MOW WHEN THE GUARD IS NOT INSTALLED.

MULCHING KIT ASSEMBLY

1. Open the Side Deflector (A).
2. Pass the Lug Boss (4) on the Mulching Kit (B) through the bottom of the Side Deflector's Pivot Rod (1).
3. Insert the lower right corner of the Mulching Kit (6) into the cutting deck's corresponding hole (3).
4. Insert the right Hook (5) into the Cutting Deck's corresponding hole (2).
5. Insert the left Hook (5) into the Cutting Deck's corresponding hole (2).

Refer to Figure 9.

Fig 9

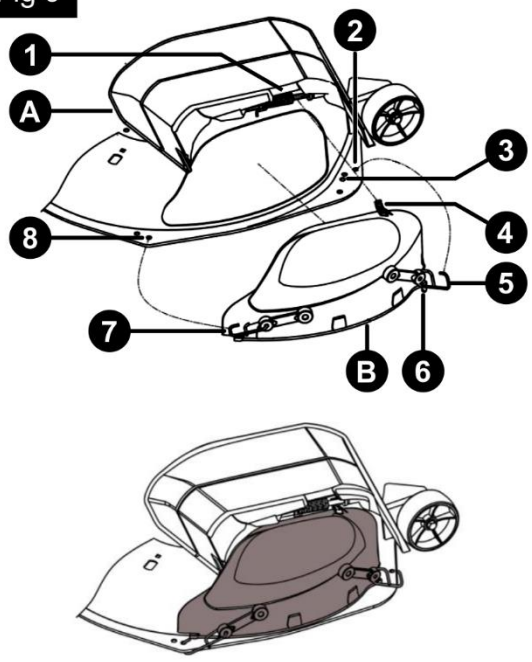

MOUNTING THE REAR TAILGATE

1. Remove the two M8 x 20 Bolts (3), the M8 Nuts (1), and the Tension Arm Bushing (2) that secured the gearbox cover (4).

Refer to Figure 10.

Fig 10

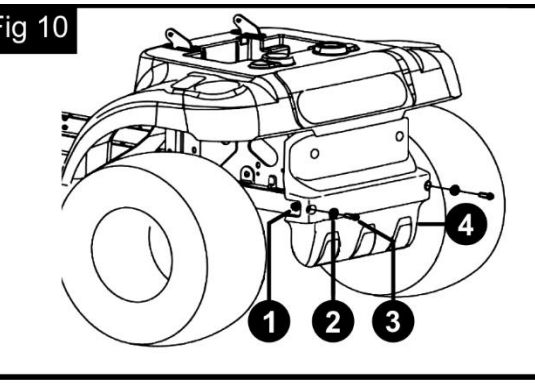

2. Remove the M8 x 40 Bolts (3) from the chassis and insert the Tension Arm Bushings (2) into the two holes where the bolts were stored.
3. Align the Rear Tailgate (5) and install the M8 x 40 Bolts (3) and the M8 Nuts (1). Tighten the assembly.

Refer to Figure 11.

Fig 11

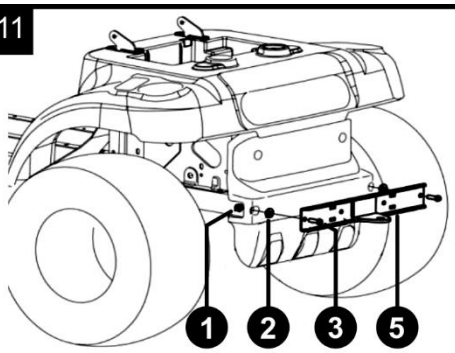

CUTTTING DECK REINFORCEMENT PLATE ASSEMBLY

1. Place the Cutting Deck Reinforcing Plate (4) at the bottom of the Cutting Deck (1).
2. Insert the M6 x 16 Bolts (5) and M6 Washers (3).
3. Attach and tighten with the M6 Nuts (2).

Refer to Figure 12,

Fig 12

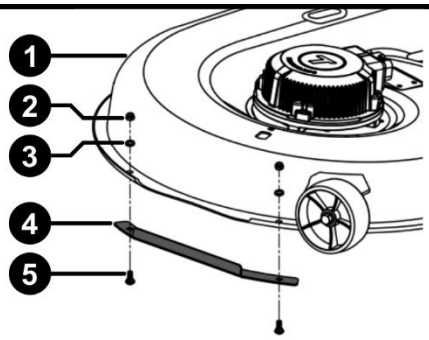

7. CONTROLS

CONTROLS & FEATURES

NOTE REFERENCES TO LEFT (L), RIGHT (R), FRONT (F), AND BACK / REAR (B) INDICATES THE POSITIONS ON THE MOWER WHEN THE OPERATORS IS FACING FORWARD WHILE SEATED IN THE SEAT.

Refer to Figure 13.

Fig 13

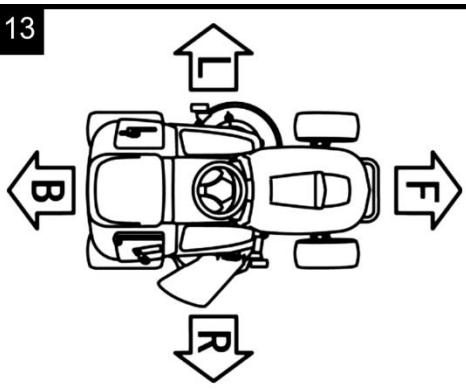

IDENTIFICATION OF MAIN COMPONENTS

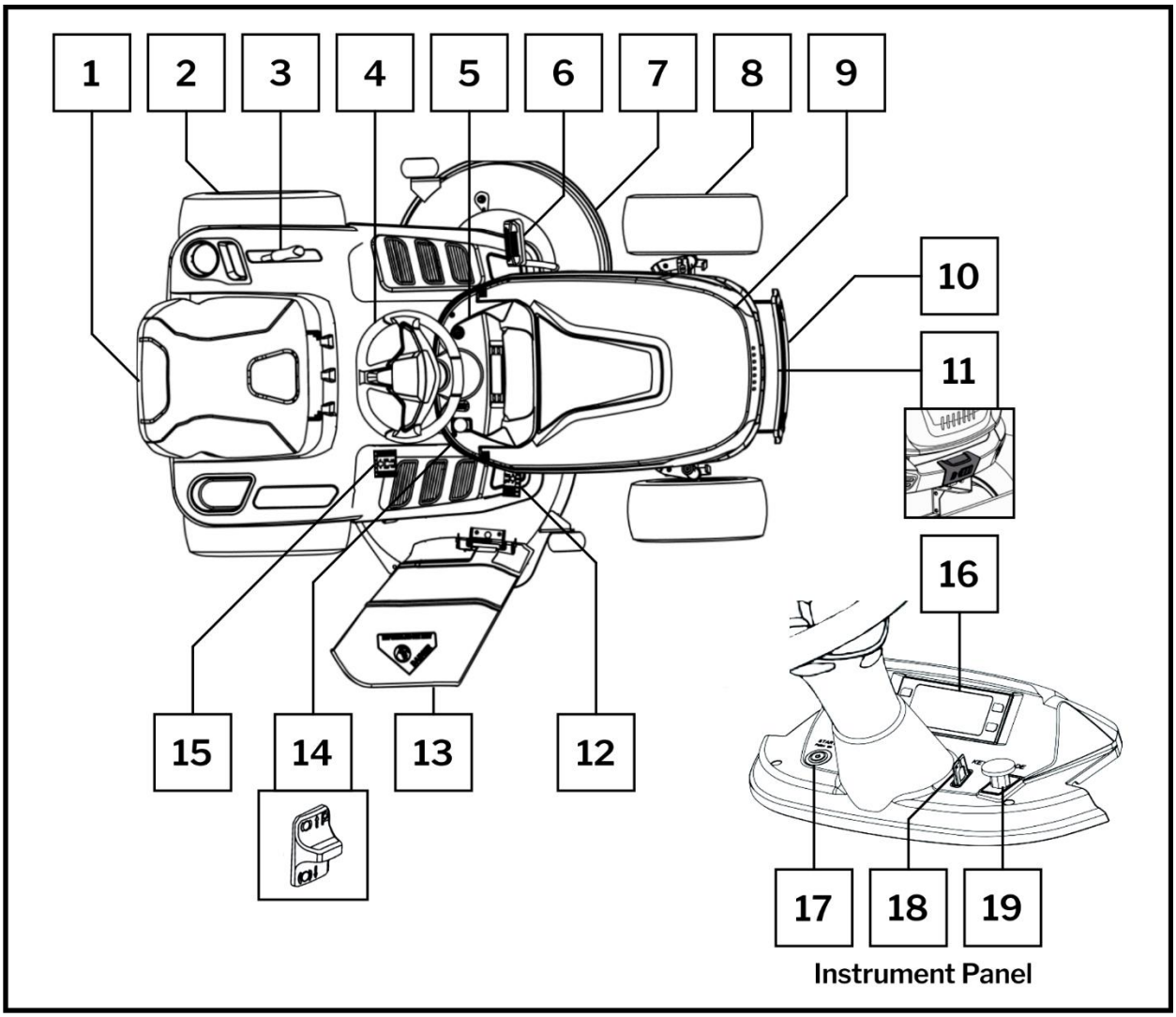

1. Seat
2. Rear Wheel
3. Cutting Deck Lift Handle
4. Steering Wheel
5. Instrument Panel
6. Brake Pedal
7. Cutting Deck
8. Front Wheel
9. Battery Holder Cover
10. Front Bumper
11. Battery Charging Input
12. Forward Drive Pedal
13. Side Deflector
14. Parking Brake ON / OFF Switch
15. Reverse Drive Pedal
16. Center Console
17. Start / Stop Button
18. Safety Key
19. Blade Start / Blade Stop Knob
    PTO (Power Take-Off)

SAFETY KEY

The Safety Key is an authorization device. It must be inserted before the Start / Stop button is pressed to start the mower. The safety key must be removed when the lawnmower is not used.

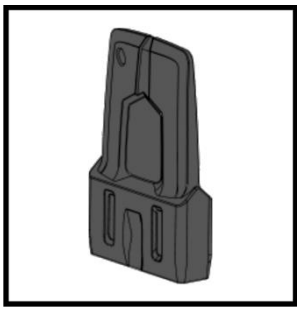

START / STOP BUTTON

The Start / Stop Button powers the machine after the safety key is correctly in place.

- To activate the machine, press the Start / Stop Button for five seconds, The button's indicator will light up as the power is engaged.
- When the button is pressed again, the button's indicator light will shut off, and the power function will shut off.

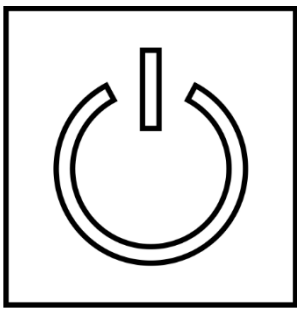

CUTTING HEIGHT ADJUSTMENT

The Lift Handle and Index Bracket raises or lowers the cutting blade deck to adjust the grass cutting height. There are seven positions on the index bracket (designated 1 to 7 on the label), which correspond to various heights between 1.18 to 3.5 inches (30 to 90 mm).

- Move the lift handle to the right and out of the index bracket. Lower or raise the cutting deck to the desired position.
- Return the lift handle to the left and into the desired slot to lock the deck in place before mowing.

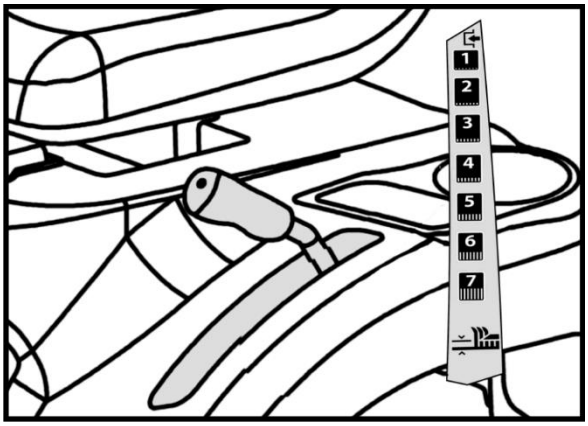

BLADE START / STOP KNOB - PTO (POWER TAKE-OFF)

The Blade Start / Stop Knob operates the electric motors on the deck to engage and stop the rotation of the cutting blades. The PTO switch is a critical safety device developed to prevent unintentional blade actuation of lawn equipment.

- Pull the knob upward to engage the blades or push the knob downward to disengage the blades.



DRIVE ENGAGEMENT PADAL (HYDROSTATIC TRANSMISSION)

This Pedal engages the wheel's directional drives as well as modulates the machine's forward and reverse speeds.

- To engage the Forward drive, press the pedal with the front of your foot toward "F." As you increase the pressure on the pedal, the speed of the machine increases.
- To engage the Reverse drive, press the pedal with the heel of your foot towards "R."
- The pedal automatically falls into Neutral "N" when released.

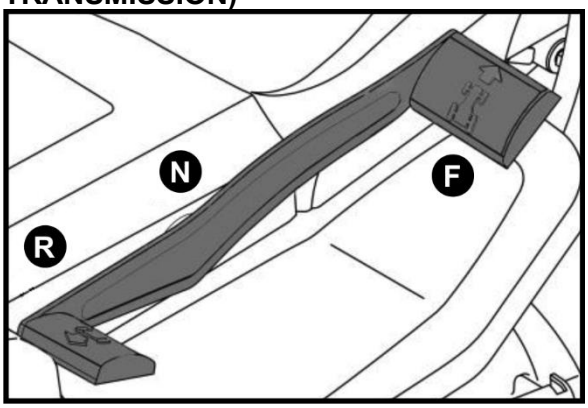

⚠ WARNING! REVERSE MUST ONLY BE ENGAGED WHEN THE MACHINE IS STOPPED.

NOTE THE DRIVES MUST BE DISENGAGED AND IN NEUTRAL TO ENGAGE THE PARKING BRAKE.

BRAKE PEDAL

The Brake Pedal is located on the front left side under the instrument panel.

- The brake pedal can be used for quick stops and for setting the parking brake.

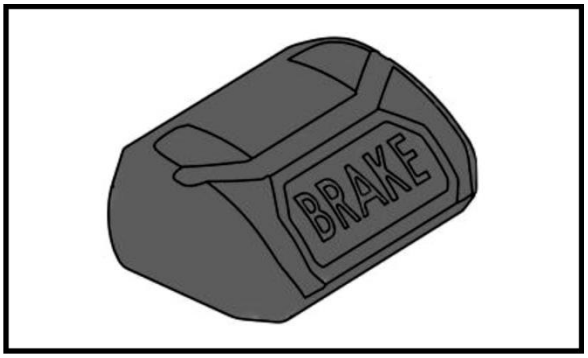

CENTER CONSOLE

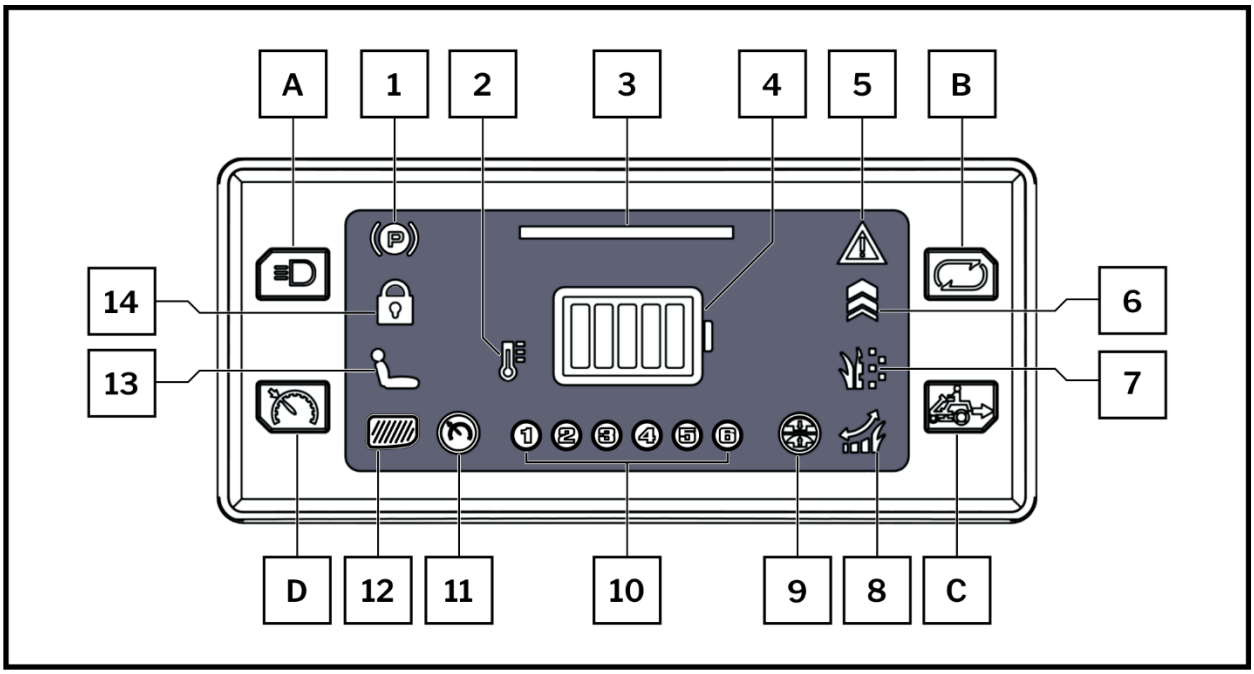

1. **BRAKE:** the icon lights continuously red when the brake is engaged. The icon is off when the brake is not engaged.

2. **BATTERY TEMPERATURE WARNING:** The icon continuously lights when the temperature of any battery pack is high.

3. **STATUS INDICATOR:** The icon lights continuously green when the machine is performing normally. The icon lights constantly red when a fault has occurred.

4. **BATTERY POWER:** Indicates the combined battery power and displays their current level in real time. Green bars indicate charge status. The red bar indicates low power rating.

5. **FAULT INDICATOR:** The icon lights continuously red when a fault has occurred. Refer to fault codes.

6. **BLADE SPEED HIGH:** The icon lights continuously green when blades are rotating in high-speed mode.

7. **BLADE SPEED MEDIUM:** The icon lights continuously green when blades are rotating in medium speed mode.

8. **BLADE SPEED LOW:** The icon lights continuously green when blades are rotating in low-speed mode.

9. **PTO:** The icon lights continuously when the PTO (Power Take-Off) function is engaged.

10. **BATTERY PACK INDICATOR:** When a battery is inserted into one of the six battery compartments, the compartment's icon (1-6) will continuously light.

11. **CRUISE CONTROL:** The icon continuously lights when the cruise control is engaged.

12. **GRASS COLLECTION (OPTIONAL):** The icon lights continuously red when the grass collector is full.

13. **SEAT:** The icon lights continuously red when the operator IS NOT sitting in the seat. The machine will power OFF when the operator IS NOT sitting in the seat.

14. **SAFETY KEY:** The icon lights continuously red when the safety key IS NOT inserted. The icon light is off when the safety key is correctly inserted.

A. **HEADLIGHT:** The icon lights continuously when the LED headlights are on. Press the headlight switch to turn the lights ON and press the switch again to turn the lights OFF.

B. **CHARGING:** Insert the charger into the charging port (refer to CHARGING THE BATTERY ON-BOARD). Following a self-diagnostic, the charging icon will flash to indicate the batteries are in charging mode. The icon will light continuously to indicate a full charge.

C. **CRUISE CONTROL:** The icon lights continuously green when the cruise control mode is engaged. Press the cruise control button to lock the driving speed and the indicator icon will light. To disengage the cruise control mode, press the button again and the indicator icon will turn off. When the cruise control mode is engaged, pressing the forward drive pedal, pressing the reverse drive pedal, or pressing the brake pedal will disengage this function.

D. **RMO (REVERSE MOWING OPTION):** The icon lights continuously when the RMO mode is engaged. Press the RMO button to engage the function and the indicator icon will light. To disengage RMO, press the button again and the indicator icon turns off. The PTO is disengaged when the operator leaves the seat or turns off the power. Once RMO is disengaged the icon will be off and the function will require to be re-engaged.

8. OPERATIONS

PRELIMINARY

Before starting to mow, it is necessary to conduct several checks and operations to ensure you can work efficiently and in maximum safety.

BATTERY CHECK

- Charge the batteries fully before using the machine for the first time after purchase.
- Always check the battery charge status before using the machine.

PARK BRAKE HANDLE

The Park Brake Handle is located at the front of the console under the steering wheel. It is used to engage the Parking Brake when the mower is at rest.
Refer to Figure 14.

Fig 14

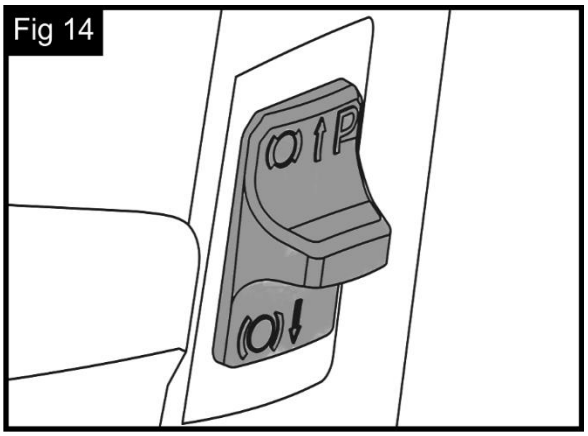

⚠ WARNING! NEVER LEAVE A POWERED MACHINE RUNNING AND UNATTENDED. ALWAYS DISENGAGE BLADE START / STOP KNOB, STOP THE MOWER, SET PARKING BRAKE AND REMOVE KEY TO PREVENT UNINTENDED STARTING.

NOTE THE PARK HANDLE MUST BE SET IF THE OPERATOR LEAVES THE SEAT.

TIRE PRESSURE

Having the right tire pressure is important for ensuring that the cutting deck and blades are horizontal and mows evenly.

1. Unscrew the protective caps.
2. Connect a compressed air line with a gauge to the valves.
3. Adjust the pressure according to the values indicated in the PRODUCT SPECIFICATIONS on page 2.

Refer to Figure 15.

Fig 15

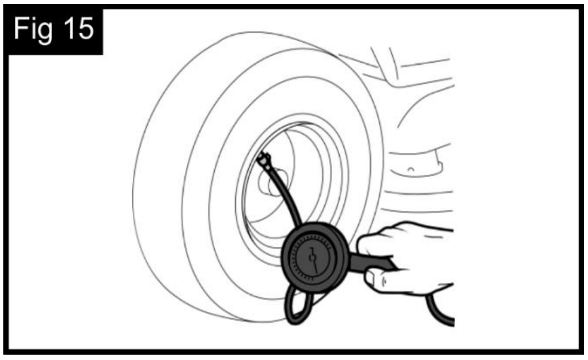

RECOMMENDED TIRE PRESSURES:
FRONT 17 PSI / 1.2 bar (15 x 6.0 - 6)
REAR 14.4 PSI / 1 bar (18 x 8.5 - 8)

SEAT ADJUSTMENT

1. Lift the seat adjustment lever (1) upwards.
2. Slide the seat (2) forward or backward to adjust to a comfortable position.

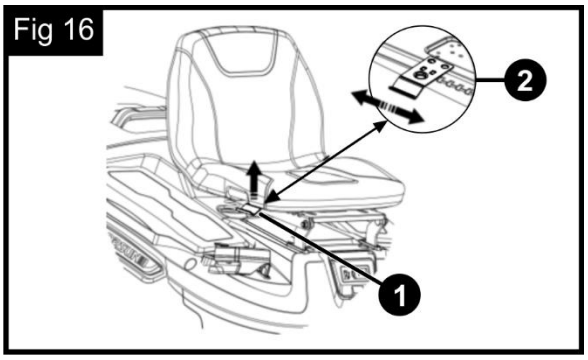

⚠ WARNING! BE SURE THE SEAT IS LOCKED INTO PLACE BEFORE OPERATING THE MOWER. A SEAT THAT IS NOT SECURE CAN CAUSE THE OPERATOR TO SHIFT AND LOSE CONTROL OF THE MOWER AND RESULT IN POSSIBLE DEATH OR SEVERE PERSONAL INJURY.

SAFETY CHECKS

Run the following safety checks and ensure that the results correspond to those outlined in the tables.

⚠ WARNING! ALWAYS PERFORM SAFETY CHECKS BEFORE USE.

GENERAL SAFETY CHECK

Object	Result
Batteries.	No damage to casing and cover.
Pushbutton panel controls and commands.	Good condition. No damage.
Rear unload guard, grass catcher.	Good condition. No damage. Professionally installed.
Electrical cables	All insulation intact. No mechanical damage.
Operate the machine forwards / reverse and release the drive pedal.	The machine slows down and stops.
Safety devices	Proceed as indicated in

CONTROL OF SAFETY DEVICES

STATUS	ACTION	RESULTS
Operator seated. Drive pedal in neutral position (pedal released).	Fully insert the key.	The machine is ready to be turned ON.
Machine on or in operation.	The operator stands up from the seat.	All services are deactivated. The Seat icon flashes, and the Status icon is illuminated.

STATUS	ACTION	RESULTS
Operator seated. Drive pedal in forward or reverse position.	Try to start the machine.	The Status icons in stops blinking and turns green.
Start PTO switch.	Try to start the blade motors.	Knife start. The PTO icon is illuminated.
Blades are engaged.	Reverse the mower without pressing the reverse mowing option button.	The blade rotations disengage.
Blades are engaged.	The grass collecting bag (optional) was removed.	The blade rotations disengage.
Machine ON and Operating.	Release the drive pedal.	The machine slows down and stops.
Machine ON and Operating.	Test drive.	No unusual vibrations, no unusual sound, and correct operation of the steering, controls, and pedals.

NOTE IF ANY RESULTS DO NOT MATCH THE INDICATIONS IN THE TABLES, DO NOT USE THE MACHINE! CONTACT A PRORUN-APPROVED SERVICE CENTER TO HAVE IT CHECKED AND REPAIRED IF NECESSARY.

DRIVING & TRANSPORT ON PUBLIC ROADS

Check the relevant road traffic regulations before driving the machine on a public road. When transporting the machine on another vehicle, always use approved security devices and make sure that the machine is secure.

OPERATION ON SLOPES

⚠ WARNING! ONLY MOW ON SLOPES WITH GRADIENTS UP TO THE MAXIMUM AS LISTED IN THIS OPERATOR'S MANUAL.



Slopes are a major factor related to loss of control and tip-over accidents, which can result in severe injury or death. All slopes require extra caution. If you cannot back up the slope, or if you feel uneasy on it, do not mow it.

PRORUN

For your safety, use the slope gauge included as part of this manual to measure slopes before operating this machine on a sloped or hilly area. If the slope is greater than 15-degrees as shown on the slope gauge, do not operate this machine in that area or a severe injury could result.

⚠ DANGER! RISK OF OVERTURNING ON STEEP GRADIENTS.

⚠ DANGER! REDUCE SPEED BEFORE ANY CHANGE OF DIRECTION ON SLOPES! USE THIS SLOPE GAUGE TO DETERMINE IF A SLOPE IS TOO STEEP FOR SAFE OPERATION!

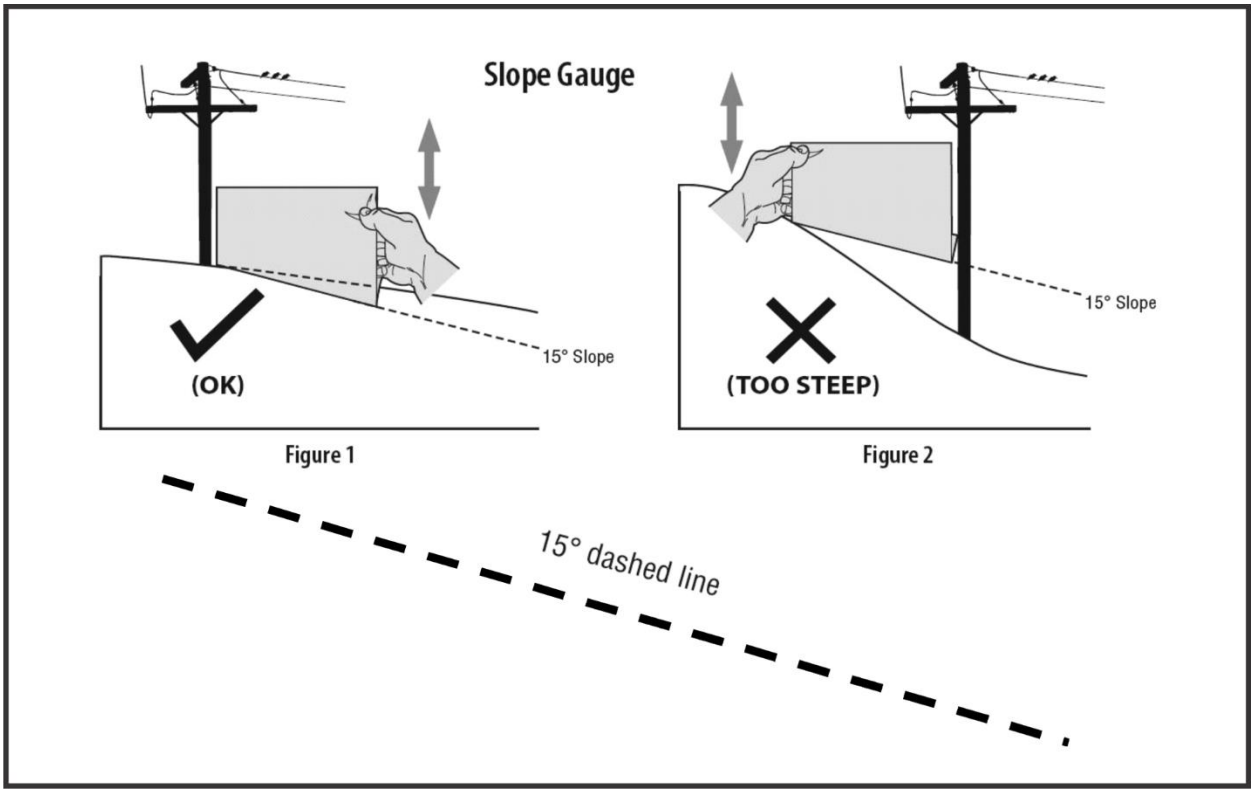

TO CHECK THE SLOPE, PROCEED AS FOLLOWS:

1. Remove this page and fold along the dashed line.
2. Locate a vertical object on or behind the slope (e.g., a pole, building, fence, tree, etc.).
3. Align either side of the slope gauge with the object (see Figure 1 and Figure 2).
4. Adjust gauge up or down until the left corner touches the slope (see Figure 1 and Figure 2).
5. If there is a gap below the gauge, the slope is too steep for safe operation (see Figure 2 above).

⚠ DANGER! SLOPES ARE A MAJOR FACTOR RELATED TO TIP-OVER AND ACCIDENTS WHICH CAN RESULT IN INJURY OR DEATH. DO NOT OPERATE THE MACHINE ON A SLOPE GREATER THAN 15°, ALL SLOPES REQUIRE EXTRA CAUTION.

DO:

- Mow either up or down on a diagonal to reduce the possibility of slipping and rolling. It is recommended to avoid mowing across the face of slopes.
- Exercise extreme caution when changing direction on slopes.
- Watch for holes, ruts, bumps, rocks, or other hidden objects. Uneven terrain could overturn the machine. Tall grass can hide obstacles.
- Use slow speed. If the Mower must be stopped on the slope, please choose a speed as low as possible. Avoid starting or stopping on the slope. If the tires are unable to maintain traction, disengage the blades and proceed slowly and carefully straight down the slope.
- Use extra care with any attachments. These can change the stability of the machine.
- Keep all movement on the slopes slow and gradual. Do not make sudden changes in speed or direction. Rapid acceleration or deceleration could cause the front of the machine to lift and rapidly flip over backwards, which could cause severe injury.
- Avoid stopping on a slope if possible. If stopping on a slope is unavoidable, make sure to engage parking brake. When restarting, use the lowest possible speed. If turning is necessary, exercise extreme caution when changing direction and always turn downhill

DO NOT:

- Turn on slopes unless necessary; then turn slowly uphill and use extra care while turning.
- Mow near drop-offs, ditches, or embankments. The mower could suddenly turn over if a wheel is over the edge of a cliff, ditch, or if an edge caves in.
- Try to stabilize the machine by putting your foot on the ground.
- Operate the mower in the rain or in wet areas.
- Mow on wet grass. Reduced traction could cause sliding.
- Tow heavy pull behind attachments (e.g., loaded dump cart, lawn roller, etc.) on slopes greater than 5 degrees. When going downhill, the extra weight tends to push the mower and may cause you to lose control (e.g., mower may speed up, the braking and steering ability can be reduced, or the attachment may jack-knife and cause mower to overturn).
- Do not turn the power and the key OFF and coast downhill.

⚠ DANGER! RISK OF OVERTURNING ON STEEP GRADIENTS.

⚠ DANGER! REDUCE SPEED BEFORE ANY CHANGE OF DIRECTION ON SLOPES! USE THIS SLOPE GAUGE TO DETERMINE IF A SLOPE IS TOO STEEP FOR SAFE OPERATION!

Comply with the limits indicated in the GENERAL SAFETY REGULATIONS / DESIGNATED regardless of the mowing direction.

- Remember there is no such thing as a "safe” slope.
- Driving on grassy slopes requires particular care.

- To prevent overturning or loss of control of the machine:
  - Never mow across the face of the slope.
  - Lawns on slopes must be mowed by moving up and down and never across them in forward gear.
  - When changing direction, take great care that the wheels facing the slope do not hit any obstacles (such as stones, branches, roots, etc.) that may cause the machine to slide sideways, tip over or make you lose control.
- Do not stop or start suddenly when going up or downhill.
- Shift into drive gear very gently when facing uphill, paying particular attention to prevent the machine from tipping up.
- Reduce speed:
  - Before changing direction and during tight turns.
  - Before tackling a slope, especially downhill, to ensure a safe braking distance.
  - Never switch to reverse gear to decrease speed when going downhill. This can cause a loss of control, especially on slippery ground.

START-UP

TO START THE MACHINE:

1. Sit in the operator’s position.
2. Fully insert the key.
3. Wait for the machine's electrical check to be performed, during which the icons on the pushbutton panel will flash.
4. Press the power button.

NOTE AT THE END OF THE ELECTRICAL CHECK, THE LED COMES ON MOMENTARILY.

DRIVE AND TRANSFERS

When moving the machine:

1. Disengage the blade’s motors (PTO).
2. Raise the cutting deck height to the highest position.
3. Press the drive pedal forward to move the machine in the required direction of driving and set the required speed by adjusting the pressure on the pedal.
4. Proceed to the work area.

CRUISE CONTROL

1. Press the drive pedal forward.
2. While maintaining the desired speed, press the cruise control button on the instrument panel and immediately release the forward drive pedal to activate the cruise control mode.

TO DISENGAGE THE CRUISE CONTROL:

- Press the brake pedal, or
- Press the forward drive pedal, or
- Press the reverse drive pedal, or
- Press the cruise control button.

NOTE **CRUISE CONTROL WILL NOT ENGAGE IN REVERSE.**

NOTE **REVERSE MUST ONLY BE ENGAGED WHEN THE MACHINE HAS STOPPED.**

GRASS CUTTING

1. Set the cutting deck height to the desired position.
2. Engage the blades' rotation (PTO) only on lawns. Do not engage them on stony ground or when the grass is extremely high.
3. When starting to cut grass, start off slowly and carefully.
4. Adjust work speed and cutting height in relation to lawn conditions (height, density, and humidity of the grass) and the amount of grass to be cut.

NOTE **THE FORWARD DRIVE SPEED DECREASES IF THE BATTERY CHARGE THRESHOLD FALLS BELOW 40%.**

NOTE **THE APPEARANCE OF THE LAWN WILL IMPROVE IF YOU ALTERNATE CUTTING IN BOTH DIRECTIONS AT THE SAME HEIGHT.**
Refer to Figure 17

Fig 17

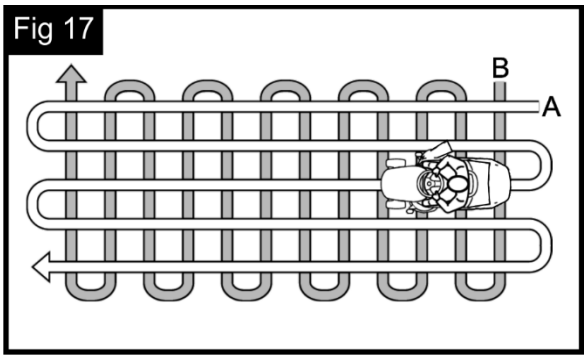

NOTE **TO PROCEED IN REVERSE GEAR WITH THE CUTTING MEANS ENGAGED, PRESS THE RMO SO THAT THE MOTOR DOES NOT STOP**

MOWING COMPLETED

WHEN MOWING HAS BEEN COMPLETED:

1. Disengage the blades' rotation (PTO).
2. Raise the cutting deck height to the highest position.
3. Press the drive pedal forward to move the machine in the required direction of driving and set the required speed by adjusting the pressure on the pedal.
4. Proceed to the storage area.

TO STOP THE MACHINE:

1. Release the forward drive pedal to stop the drive gear.
2. Turn the machine OFF by removing the key.

NOTE TO SAVE BATTERY POWER, DO NOT LEAVE THE KEY INSERTED WHEN THE MACHINE IS NOT IN USE.

AFTER USE

1. Allow the machine to cool before storing it in an enclosed space.
2. Clean the machine.
3. Make sure there are no loose or damaged components. If necessary, replace the damaged components and tighten any screws and loose bolts or contact a PRORUN-approved service center.
4. Position the machine near a power socket and charge the batteries so that it is ready to be used when next required.

NOTE ALWAYS LEAVE THE MACHINE IN A SHADED AREA OR SHELTERED ENVIRONMENT AT A TEMPERATURE BELOW +95 °F (+35 °C).

9. MAINTENANCE

GENERAL INFORMATION

BEFORE COMMENCING ANY INSPECTIONS, CLEANING, MAINTENANCE, OR ADJUSTMENTS ON THE MACHINE:

Disengage the blade rotation (PTO)

1. Stop the machine.
2. Make sure that all moving parts have come to a complete stop.
3. Remove the safety key.

⚠ DANGER! NEVER LEAVE THE SAFETY KEY INSERTED OR WITHIN REACH OF CHILDREN OR INAPPROPRIATE PEOPLE.

4. Read all relevant instructions.
5. Use suitable clothing, protective gloves, and goggles.

The frequency and type of procedures are outlined in the following "Maintenance Table". The table will help you maintain your machine’s safety and performance. It summarizes the main interventions to be made and the frequency applicable to each of them. Conduct the relevant tasks as soon as they are scheduled to be performed. The use of non-genuine and / or incorrectly assembled spare parts and attachments could adversely affect the machine’s operation and safety. The manufacturer shall decline all liability in the event of injuries or damage caused by such parts. Contact PRORUN Customer Service for spare parts and approved dealers / service centers information.

BATTERY

BATTTERY LIFE

The machine's run-time and the area of lawn that is mowed before the batteries require recharging can be affected by the following:

- Higher energy work requirements (e.g. cutting dense, tall, or humid grass).
- End-user's methods of operation:
  - Switching the machine ON and OFF frequently while working.
  - Setting a cutting height that is too low for the lawn conditions.
  - Working at a speed that is too high for the amount of grass to be removed.
- Environmental factors, such as a high ambient temperature above +95 °F (+35 °C).

To optimize the machine's run-time and the area of lawn that is mowed before the batteries require recharging, it is advisable to:

- Cut the grass when the lawn is dry.
- Cut the grass frequently so that it does not grow too tall.
- Set a higher cutting height when the grass is very tall, then set a lower height and cut the lawn a second time to achieve the desired height.
- Cut the grass at a temperature between +40 and +95 °F (+5 and +35 °C).

NOTE BE SURE TO CHARGE THE BATTERIES BEFORE THE FIRST USE AFTER PURCHASE.

NOTE IN ORDER TO START THIS MOWER, PRORUN BATTERIES TOTALING 20 AH (2 X PB160100) OR MORE ARE REQUIRED.

- For best performance, we recommend the use of PRORUN batteries that total 40 Ah or more.
- When not in use, PRORUN 60V battery packs should be stored in an enclosed area where the temperature will not drop below -4°F (-20°C).
- Optimal charging temperatures are between 40°F (5°C) and 104°F (40°C).

⚠ WARNING! IF ANY PARTS ARE BROKEN OR MISSING, DO NOT ATTEMPT TO ATTACH THE BATTERY PACKS TO THE MOWER OR OPERATE THE MOWER UNTIL THE BROKEN OR MISSING PARTS ARE REPLACED. FAILURE TO DO SO COULD RESULT IN SEVERE INJURY.

INSTALLING THE BATTERY PACKS

1. Open the battery holder cover.

Refer to Figure 18.

Fig 18



2. The PRORUN electric lawn tractor is equipped with six battery compartments to accommodate up to six battery packs at the same time.

Refer to Figure 19.

Fig 19

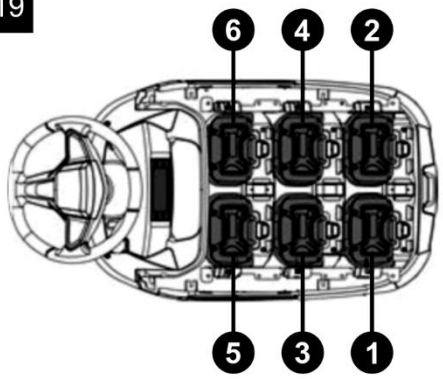

3. Align the grooves in the battery pack with the raised ribs in the battery compartment, and then insert the battery pack into the compartment.
4. Lightly push the battery pack downward until you hear a “click.” The battery-release button will spring up when the battery pack is securely attached.
5. Attach more battery packs into the remaining battery compartments in the same manner.

Refer to Figure 20 PUSH.

Fig 20

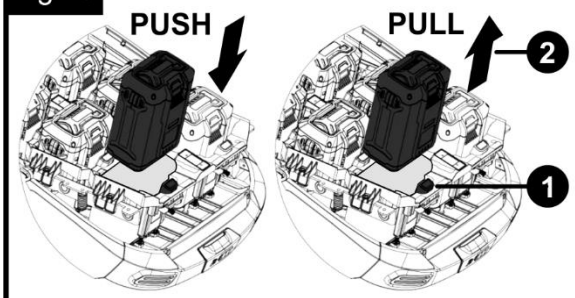

REMOVING THE BATTERY PACKS

1. Open the battery holder cover.
2. Depress the battery-release button (1) to detach the battery pack. The battery pack will spring upward lightly as illustrated in Figure 20 (2) PULL.
3. Lightly lift the battery pack out of the compartment.
4. Close the battery holder cover.

BATTERY CHARGING

The machine battery must always be charged:

- Before using the machine for the first time after purchase.
- When the minimum state of charge is reached.
- After every two months of storage.
- Before starting up the machine after a prolonged period of inactivity.

CHARGE STATUS (SOC)	LED INDICATOR
SOC > 80%	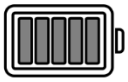
60% ≤ SOC < 80%	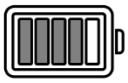
40% ≤ SOC < 60%	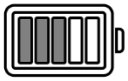
20% ≤ SOC < 40%	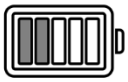
10% ≤ SOC < 20%	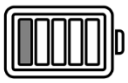

NOTE WHEN THE BATTERY IS NOT CONNECTED TO A PRORUN BATTERY CHARGER, THE BATTERY'S CHARGE WILL GRADUALLY LOSE POWER EVEN IF THE BATTERY IS NOT USED.

If the battery is subject to a deep discharge, it could be seriously damaged to the point that it can no longer be used.

The warranty does not cover damage caused by batteries not charged at regular intervals.

NOTE RECHARGING MUST BE CONDUCTED EXCLUSIVELY UTILIZING A PRORUN EXTERNAL BATTERY CHARGER.

Other recharging systems can irreversibly damage the batteries.

BATTERY CHARGING GUIDELINES

- Use only the battery charger provided with this mower or an approved PRORUN external charger.
- The batteries should be fully charged before each use.
- It is recommended that the mower batteries are charged once every month during off-season storage.
- It will take approximately 10 hours to fully charge the batteries. Leaving the batteries connected to the charger for more than 10 hours will not damage the batteries.
- The batteries do not develop a memory and do not need to be fully discharged before recharging.
- Always disconnect the battery charger (or extension cord, if used) from the electrical outlet first, then disconnect the charging cord from the charging port.
- It is recommended that the mower be charged after each use.
- Storing batteries in a discharged state could reduce future performance.

RECHARGING ENVIRONMENT

NO.	ITEMS	TECHNICAL INDICATOR
1	Nominal Working Temperature	77 º F (25º C)
2	Working Temperature Range	41° - 104°F, (5° - 40°C)
3	Storage Temperature	14° - 113°F, (-10° - 45°C)
4	Relative Humidity	45% to 75%
5	Altitude	Below 6560 feet (2000 m)

NOTE THE BATTERIES MUST ONLY BE CHARGED IN AN AREA PROTECTED AGAINST POOR WEATHER CONDITIONS, IN THE SHADE, AT A RECOMMENDED TEMPERATURE OF BETWEEN +40° TO +105° F (+5° TO +40° C).
The batteries are equipped with a device that inhibits recharging if the environmental temperature is not between +32° and 115° F (+0° and +45° C).

NOTE THE BATTERY CAN BE CHARGED AT ANY TIME, EVEN PARTIALLY, WITH NO RISK OF DAMAGING IT.

⚠ WARNING! DO NOT CARRY OUT MAINTENANCE OR CLEANING OPERATIONS WHILE THE BATTERY IS CHARGING.

CHARGING THE BATTERY ON-BOARD
To charge the battery:
1. Position the machine and the supplied battery charging unit (1) close to a power outlet and remove the safety key.
2. Life the cap on the recharging socket (3) located at the front of the machine.

Refer to Figure 21.

Fig 21

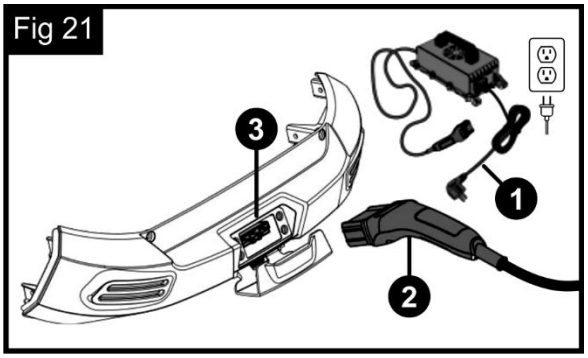

3. Connect the supplied battery charging unit recharging socket's bayonet mount (2) to the recharging socket (3).
4. Connect the battery charger to a grounded / earthed electrical socket by inserting its plug.
5. The BATTERY POWER LEVEL icon on the Center Console LCD screen will depict the charge (4).

Refer to Figure 22.

Fig 22

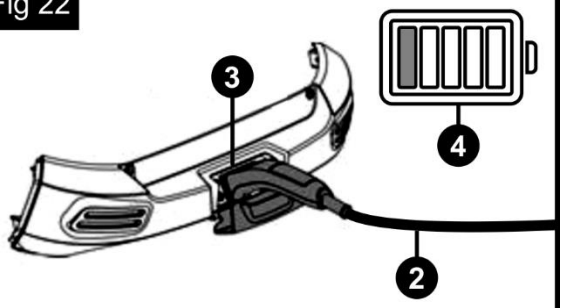

NOTE BATTERY CHARGING TIMES MAY INCREASE IF THE MACHINE HAS BEEN USED IN HEAVY-DUTY WORK CONDITIONS WITH CONSEQUENT INDICATION OF BATTERY OVERHEATING.

NOTE THE BATTERIES CAN BE KEPT UNDER CHARGE INDEFINITELY.

NOTE DURING RECHARGING, THE BATTERY INDICATOR LED BAR GRAPH WILL INCREASE PROGRESSIVELY.
When each individual charge threshold is reached, the respective LEDs will remain constantly lit, while the other LEDs will continue to flash.
Refer to Figure 22 Part 4.

NOTE THE VEHICLE-MOUNTED RECHARGEABLE BATTERY IS CHARGED FROM LOW TO HIGH ACCORDING TO THE ELECTRIC QUANTITY. IT IS THEREFORE ADVISABLE ALWAYS TO CONDUCT A COMPLETE CHARGING.

NOTE WHEN THE CHARGE LEVEL DROPS BELOW THE 30% THRESHOLD, THE FIRST TWO LEDS BEGINS FLASHING. BELOW THE 10% THRESHOLD, THE FIRST BATTERY LED BEGINS FLASHING RAPIDLY AND THE CUTTING MEANS DISENGAGE. STOP MOWING AND RETURN TO BASE TO RECHARGE THE BATTERIES.

NOTE WHILE CHARGING, ALL MACHINE FUNCTIONS ARE DISABLED, EVEN WHEN THE KEY IS FULLY INSERTED.

THE BATTERIES MOUNTED ON THE MACHINE ARE DESIGNED AND MANUFACTURED FOR THIS TYPE OF USE.

- DO NOT replace the batteries with other non-original batteries.
- DO NOT conduct interventions unless they have been indicated in this manual.
- In the event of any problems with the batteries, contact PRORUN Customer Service.

CLEANING

CLEANING THE MACHINE

Thoroughly clean the machine every time it is used:

1. Clean the outside of the machine by washing the plastic parts of the bodywork with a damp cloth. DO NOT wet the electric motors, the batteries, or any parts of the electrical system.
2. To reduce the risk of fire, keep the motors and battery housings free of grass, leaves, residues, or excessive grease.
3. Keep the pushbutton panel free of dirt and debris.

NOTE NEVER USE HIGH PRESSURE WATER OR AGGRESSIVE FLUIDS TO WASH THE BODYWORK AND ELECTRIC MOTORS.

CLEANING THE CUTTING DECK AND BLADES

Your mower's cutting deck is equipped with a water port as part of its deck wash system. Use the smart jet to rinse grass clipping from the deck's underside to prevent the buildup of corrosive chemicals.

Complete the following steps after each mowing:

1. Drive the mower to a level, clear location on your lawn, close enough for your garden hose to reach.

⚠ CAUTION! MAKE CERTAIN THE MOWER'S DISCHARGE CHUTE IS DIRECTED AWAY FROM YOUR HOUSE, GARAGE, PARKED CARS, ETC.

2. Stop the mower, disengage the blades, set the parking brake, and disconnect all power accessories.
3. Thread the end of your garden hose onto the hose coupler.

NOTE Contact PRORUN Customer Service if an adapter is required.

4. Attach the hose and coupler to the water port on the cutting deck.

Refer to Figure 23.

Fig 23

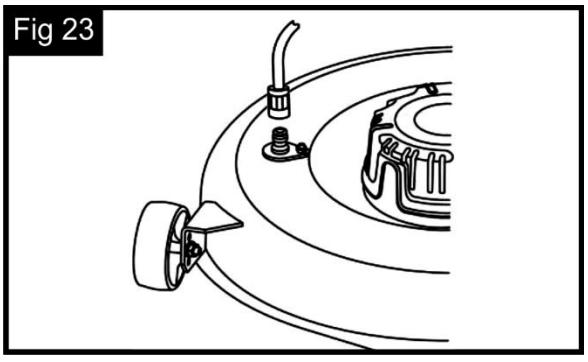

5. Turn the water on.
6. While sitting in the operator's position, start the mower as instructed in OPERATIONS of this manual.
7. Engage the blades utilizing the PTO knob.
8. Remain in the operator's position for a minimum of two minutes, allowing the underside of the cutting deck to thoroughly rinse
9. Disengage the blades utilizing the PTO knob.

10. Turn the Key Switch to the OFF position to turn off the mower.
11. Turn the water off and detach the garden hose and coupler from the water port on your cutting deck.

WHEEL MAINTENANCE

ADJUSTING THE DECK WHEELS

Move the mower onto a firm and level surface, preferably pavement, and proceed as follows:

1. Place the cutting deck lift handle to the desired mowing height setting.
2. Check the wheels for contact or excessive clearance with the surface below.
3. The deck wheels should have between ¼ to ½ inch of clearance above the ground.

If the Deck Wheels have excessive clearance or contact with the surface, adjust as the follows:

1. Raise the cutting deck lift handle to its highest setting.
2. Remove the front and rear deck wheels by removing the bolts (2) and lock nuts (3).
3. Place the cutting deck lift handle into the desired mowing height setting.
4. Reinsert the bolts (from each deck wheel – Part 1) into the index hole that leaves approximately ¼ to ½ inch between the bottom of the wheel and the pavement.

Refer to Figure 24.

Fig 24

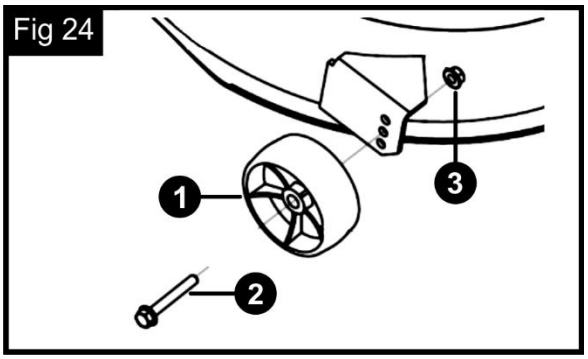

REPLACING WHEELS

- Stop the machine on flat ground and put a block under a load-bearing part of the frame on the side that the wheel is to be changed.
- The wheels are held by a snap ring which can be eased off with a screwdriver.

Refer to Figure 25 for Front and Rear Wheel assemblies.

Fig 25

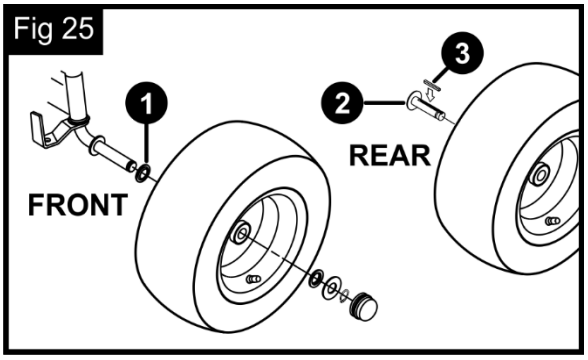

NOTE IF YOU HAVE TO REPLACE ONE OR BOTH REAR WHEELS THEY MUST HAVE THE SAME DIAMETER.

Be sure to check that the cutting deck is horizontal to prevent an uneven cut.

You must make sure the key and washer are securely lodged in place.

NOTE BEFORE REMOUNTING THE WHEEL, APPLY GREASE TO THE AXLE. PUT THE SNAP RING AND SUPPORTING WASHER BACK IN PLACE.

REPAIRING THE TIRES
The tires are “tubeless” and so all punctures must be repaired by a tire repairer following the procedures required for this kind of tire.

CUTTING BLADE MAINTENANCE

⚠ WARNING! DAMAGED OR BENT BLADES MUST ALWAYS BE REPLACED. NEVER TRY TO REPAIR THEM!

⚠ WARNING! BEFORE YOU INSPECT OR REMOVE THE BLADE, DISENGAGE THE POWER, AND PULL THE SAFETY KEY, AND WAIT FOR THE BLADEs TO COMPLETED STOP.

⚠ WARNING! AFTER STRIKING A FOREIGN OBJECT, STOP THE MOWER.
Thoroughly inspect the machine for any damage. Repair the damage before starting and operating.

⚠ WARNING! WHEN REMOVING THE CUTTING BLADE(S) FOR SHARPENING OR REPLACEMENT, PROTECT YOUR HANDS WITH A PAIR OF HEAVY GLOVES OR USE A HEAVY RAG TO HOLD THE BLADE(S).

ALWAYS USE PRORUN SPECIFIED BLADES.
- Make sure the blades are correctly balanced.
- The blades mount differently and rotate in different directions. Make sure you mount them in the correct place by referring to the code stamped on the outside of each blade.
- Periodically inspect the blade adapter(s) for cracks, especially if you strike a foreign object.

FOLLOW THE STEPS BELOW FOR BLADE(S) SERVICE:
1. The deck on the mower should not be removed. To access the blade(s), the mower can be placed on a lift, driven on ramps, or placed on jack stands.

⚠ WARNING! BE SURE THE MOWER IS SECURED, AND THE PARKING BRAKE HANDLE IS SET WHEN REMOVING THE BLADE(S).

2. Remove the screws (1) and the disc washers (2), which hold the blades (3) and the blade adapters (4) to the deck motor spindles (5).
3. Remove the blades and adapters from the deck motor spindles.

Refer to Figure 26,

Fig 26

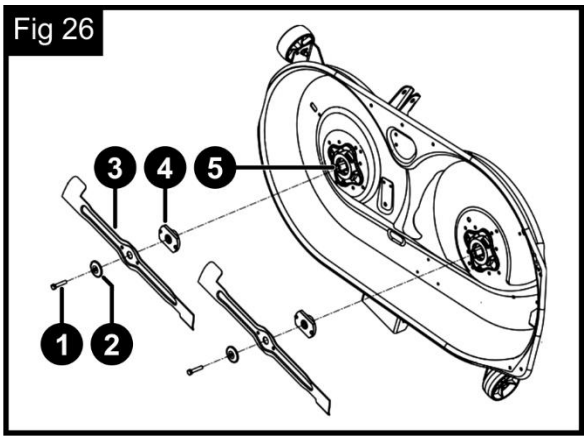

4. Check the balance of the blade on top of a round shaft screwdriver.
5. Remove metal from the heavy side until it balances evenly. When sharpening the blade, follow the original angle of the blade and the cutting edge. Grind or file each cutting edge equally to keep the blade balance.

⚠ WARNING! AN UNBALANCED BLADE WILL CAUSE EXCESSIVE VIBRATION WHEN ROTATING AT HIGH SPEEDS. IT MAY CAUSE DAMAGE TO THE MOTOR OR THE MOUNTING HARDWARE, WHICH COULD CAUSE PERSONAL INJURY.

6. Visually inspect the blade adapter for any damage or cracks.
7. Lubricate the inner surface of the blade adapter with a light oil.
8. Slide the blade adapter onto the deck motor spindle. Place the blade on the adapter such that the side of the blade marked “bottom” (or with part number) faces the ground when the mower is in the operating position. Make sure that the blade is aligned and seated on the blade adapter’s flanges.
9. Place the disc washer with the blade. Replace screw and tighten torque to 35.4 to 38.5 Ft. / Lbs. (48 to 52 Nm).
10. To ensure safe operation of your mower, periodically check the blade screw(s) for correct torque.

CUTTING DECK ASSEMBLY / CUTTING BLADES

ALIGNING THE CUTTING DECK ASSEMBLY

The cutting deck assembly should be correctly adjusted to obtain an evenly mown lawn.
If the mowing is uneven, check the tires’ pressure.
If this is not sufficient to achieve an even cut, please contact a PRORUN-approved service dealer to adjust the alignment of the cutting deck assembly.

CUTTING BLADES

Badly sharpened cutting blades pull at the grass and cause the lawn to turn yellow.

⚠ WARNING! ALWAYS REPLACE DAMAGED, BENT, OR WORN PAIRS OF THE CUTTING BLADE'S ASSEMBLY TO MAINTAIN THEIR BALANCE.

⚠ WARNING! ALL WORK ON THE CUTTING DECK AND CUTTING BLADES (DISASSEMBLY, SHARPENING, BALANCING, REPAIRING, REASSEMBLY AND/OR REPLACING) ARE DEMANDING JOBS THAT REQUIRE SPECIAL SKILLS AS WELL AS SPECIAL TOOLS. FOR SAFETY REASONS, THESE JOBS ARE BEST CONDUCTED AT A PRORUN-APPROVED SERVICE CENTER.

REPLACING A FUSE

- The machine is fitted with 20A fuses and 100A fuses. When it blows, the machine will stop, and the dashboard light switches off.
- Eventually the battery gradually runs out of power and the machine will have problems starting.
- Remove the fuse and replace it with the same fuse.

NOTE A BLOWN FUSE MUST ALWAYS BE REPLACED BY ONE OF THE IDENTICAL TYPE AND AMPERE RATING, AND NEVER BY ONE WITH ANOTHER RATING.

LUBRICATION

Utilize a grease gun to apply a small, controlled amount of grease to the areas shown in Figure 27.

- Apply two or three shots of grease and wipe off excess grease.

Lubricate the machine's movable components with engine oil.
Figure 27.

- Wipe the area clean, apply a few drops of oil, then wipe up drips or spills.

Fig 27

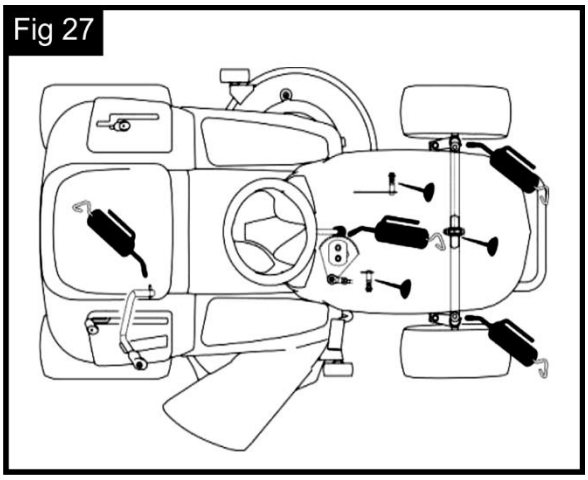

MAINTANCE SCHEDULE

MAINATENANCE SCHEDULE	PRIOR TO USE	EVERY 10 HOURS	EVERY 25 HOURS	EVERY 50 HOURS
Lube Front Caster Wheel and Wheel Spindles			X	X
Lube Pedal Pivots		X		
Grease Front Castings			X	X
Check Blades	X			
Charge Battery	X			
Check Hardware	X			

NOTE THE ELECTRICAL COMPONENTS ON THIS MOWER ARE NOT SERVICEABLE. CONTACT PRORUN CUSTOMER SERVICE.

⚠ CAUTION! CONTACT PRORUN CUSTOMER SERVICE FOR REPLACEMENT PARTS. USE ONLY IDENTICAL REPLACEMENT PARTS. THIS WILL ENSURE THAT THE SAFETY OF THE MOWER IS MAINTAINED.

⚠ WARNING! BEFORE PERFORMING ANY MAINTENANCE OR REPAIRS, STOP THE MOWER, DISENGAGE BLADES, SET PARKING BRAKE HANDLE, AND REMOVE THE SAFETY KEY TO PREVENT UNINTENDED STARTING OF THE BLADES OR MOVEMENT OF THE MOWER.

10. STORAGE & TRANSPORT

When you intend to put your machine away for more than 30 days:

- Turn off the power, remove the safety key, and allow the machine to cool down.
- Clean and maintain the machine thoroughly.
- Check the machine for any damage. If necessary, contact a PRORUN-approved service center.

Store the machine:

- With the cutting deck assembly lowered.
- In a dry place.
- Protected against poor weather conditions, at a recommended temperature of between +32º to +105º F (0º to +40 °C).
- Covered with a tarp if possible.
- In a location out of the reach of children.
- Ensure that the keys and maintenance tools are removed.

NOTE MAKE SURE THAT THE BATTERY IS FULLY CHARGED AT LEAST ONCE A MONTH AND ALWAYS BEFORE USE.
When re-starting the machine, review SET-UP and OPERATIONS in this manual.

HANDLING AND TRANSPORT
When handling the machine, always:
- Disengage the cutting blades with the PTO knob.
- Raise the cutting deck assembly to the highest position.
- Turn OFF the power and pull the safety key.

When transporting the machine on a vehicle or trailer, always:
- Use an access ramp of suitable strength, width, and length,
- Load the machine with the electric motor switched off, the safety key removed, without a driver, and pushed by an adequate and safe number of people.
- Position it so that it does not cause a hazard to anyone.
- Lock it firmly on the means of transport using ropes or chains to prevent it from tipping over and possible damage.

NOTE IF YOU FEEL UNABLE TO CONDUCT HANDLING OR TRANSPORT IN SAFE CONDITIONS, CONTACT PRORUN CUSTOMER SERVICE.

ASSISTANCE AND REPAIRS
- This manual provides all the necessary information to run the machine and for correct basic maintenance operations which can be performed by the user.
- Any regulations and maintenance operations not described herein must be conducted by a PRORUN-approved dealer or service center which have the necessary knowledge and equipment to ensure that the work is carried out correctly, maintaining the correct degree of safety and the original operating conditions of the machine.
- Any operations performed in unauthorized service centers or by unqualified persons will totally invalidate the warranty and all obligations and responsibilities of the manufacturer.
- Only PRORUN-approved service centers can conduct guaranteed repairs and maintenance. PRORUN-approved service centers only use genuine spare parts and attachments that have been designed specifically for these machines.
- Non-original parts and attachments are not approved.
- Use of non-original spare parts and attachments will jeopardize the safety of the machine and relieve the manufacturer from all obligations or liabilities.
- It is advisable to send your machine once a year to a PRORUN-approved service center for servicing, assistance, and safety device inspection.

11. TROUBLESHOOTING

PROBLEM	CAUSE	REMEDY
Excessive Vibration.	Damaged or bent cutting blade.	Replace blade.
	Cutting blade loose or unbalanced.	Tighten blade or remove and balance.
Uneven cut.	Uneven tire pressure.	Check tire pressure in all four tires.
	Deck not leveled properly.	Perform side-to -side deck adjustment.
	Dull blade.	Sharpen or replace blade.
Mower will not mulch grass.	Blade speed too low.	Turn blade boost on.
	Excessively tall grass.	Mow once at a high cutting height, then mow again at desired height or make a narrower cutting swath.
	Wet grass.	Do not mulch when grass is wet.
	Dull blade.	Sharpen or replace blade.
Mower Stopped or will not start.	Reset.	Shut off and restart mower. If problem persists, contact PRORUN Customer Service.
	Hub fault.	
	Drive sensor fault.	
	Over-voltage.	
	Pre-charge failure.	
	Hub communication failure.	
	Control console failure.	
	Right deck communication.	
	Contactor tips welded closed.	
	Self-test failure.	
	Seat sensor failure.	Check to see if the seat switch is plugged in. Shut off and restart mower. If problem persists, contact PRORUN Customer Service.
	Battery charger plugged in.	Unplug charger and return to the start-up prompt.

PROBLEM	CAUSE	REMEDY
The blades do not rotate, or the blades stopped.	Control console fault.	Check to see if the seat switch is plugged in. Shut off and restart mower. If problem persists, contact PRORUN Customer Service.
	PTO fault.	
	Overload.	
	Low battery.	
	Grass box sensor and seat sensor fault.	
Reduced speed.	Low Battery.	Charge the battery as instructions in the battery charger manual.
	Overload.	Raise deck.

FAULT CODES

PROBLEM	ICON / BUZZER	CAUSE	REMEDY
Lawn mowing motor overcurrent blockage alarm	 Warning icon flashes, battery cell 1 and 3 flashes, buzzer rings 2 long and 1 short	The grass is too dense, or factors such as foreign objects blocking the cutter head cause the mowing motor to overload	Increase the mowing height to reduce the amount of mowing each time, and clean up foreign objects on the cutter head that affect the smooth rotation of the motor.
Over-temperature alarm for mowing motor	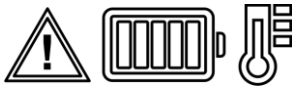 Warning icon flashing, high temperature icon flashing, battery cell 2, 4 flashing display, buzzer ringing 1 long 6 short	The grass is too dense, and the high ambient temperature causes the mowing motor to work for a long time under heavy load and low efficiency.	Long-term overload use: a. Increase the mowing height to reduce the amount of mowing each time. b. Intermittent work, restart the cutter after the motor temperature cools down.
		Mowing motor failure	Contact PRORUN Customer Service

PROBLEM	ICON / BUZZER	CAUSE	REMEDY
Battery temperature abnormal alarm	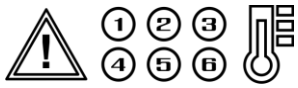	The grass is too dense, the ambient temperature is high, and the battery capacity is too small, which causes the battery pack to work in a state of high current discharge for a long time.	Abnormal high temperature: Increase the mowing height to reduce the amount of mowing each time. Increase the battery pack to improve the parallel capacity.
	Warning icon flashes, high temperature icon flashes, over-temperature battery corresponding digital icon flashes, buzzer rings 1 long 8 short	Ambient temperature below 0 ℃	Abnormal low temperature: Start working when the ambient temperature conditions are greater than 0 ℃
Speed alarm		The car is turned on when it detects that the throttle is not in the reset state (zero throttle).	Reset the throttle.
	Warning icon flashing, battery cells 1, 3, 4 flashing, buzzer ringing 1 long 4 short	Line malfunction.	Contact PRORUN Customer Service
Hall sensor fault alarm for mowing motor	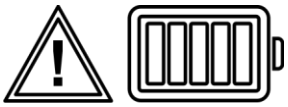	Mowing motor circuit failure.	Contact PRORUN Customer Service
	Warning icon flashing, battery cells 1, 4, 5 flashing, buzzer ringing 2 long 3 short	Mowing controller malfunction.	
Traveling Motor Hall Sensor Fault Alarm		Walking motor circuit failure.	Contact PRORUN Customer Service
	Warning icon flashing, battery cells 1, 2, 5 flashing display, buzzer ringing 2 long 4 short	Walk controller failure	

PROBLEM	ICON / BUZZER	CAUSE	REMEDY
CAN communication content alarm of mowing motor not received	 Warning icon flashing, battery cells 1, 3, 4, 5 flashing display, buzzer ringing 3 long and 1 short	Circuit failure between the mowing controller and the meter. The mowing controller is not powered on; Mowing controller malfunction.	Contact PRORUN Customer Service
CAN communication content alarm of walking motor not received	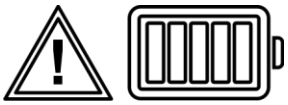 Warning icon flashing, battery cells 1, 2, 4, 5 flashing display, buzzer ringing 3 long 2 short	Circuit failure between the walking controller and the meter. The walking controller is not powered on (the main contactor is not closed); Walk controller malfunction.	Contact PRORUN Customer Service
CAN communication content alarm not received from BMU	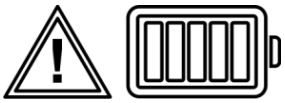 Warning icon flashing, battery cells 1, 2, 3, 5 flashing, buzzer ringing 3 long 3 short	Circuit failure between BMU and meter. BMU failure	Contact PRORUN Customer Service
Main and auxiliary knife control connection fault alarm	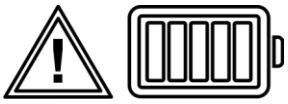 Warning icon flashing, battery cell 1, 5 flashing, buzzer ringing 3 long 4 short	The line connecting the main and auxiliary knife control communication is faulty. Cutter controller failure	Contact PRORUN Customer Service
BMU failure alarm	 Warning icon flashing, battery cells 1 and 4 flashing, buzzer ringing 3 long and 5 short	BMU hardware failure	Contact PRORUN Customer Service

PROBLEM	ICON / BUZZER	CAUSE	REMEDY
Battery pack FAIL fault alarm	 Warning icon flashes, battery cells 1 and 2 flashes, the channel icon corresponding to the battery pack flashes, and the buzzer rings 2 long and 5 short	Battery pack overcharge or overdischarge.	Contact PRORUN Customer Service
		Battery pack internal cell voltage difference, disconnection and other hardware faults.	
Alarm for less than 10AH parallel capacity	 The warning icon flashes, the channel icon corresponding to the battery pack flashes, and the buzzer beeps at a frequency of 1Hz	The installed battery pack combination capacity that meets the discharge conditions is less than 10AH.	Replace battery pack combination

12. PRODUCT DIMENSIONS

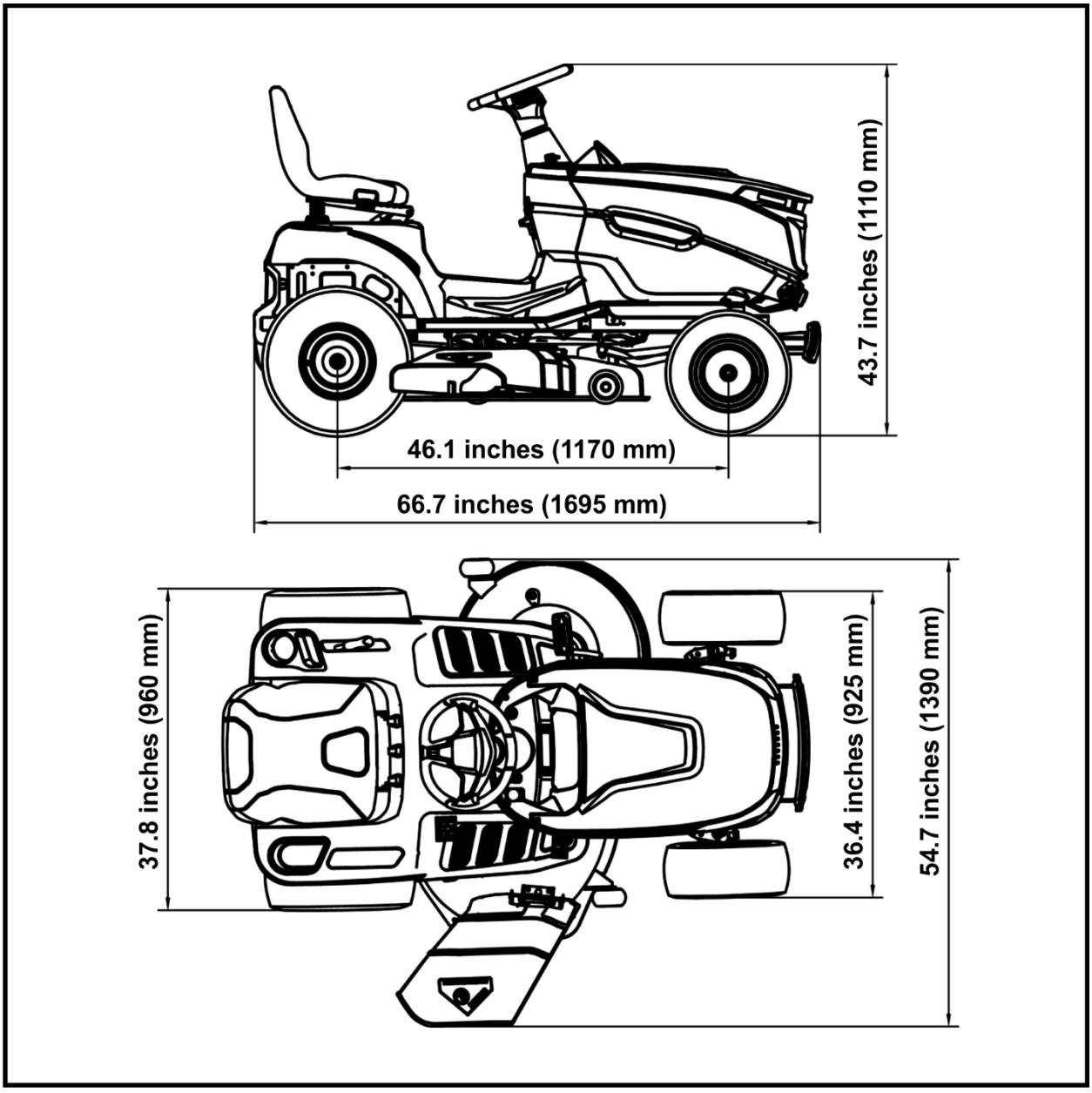

13. WARRANTY AND COVERAGE

The warranty conditions are intended for consumers only, i.e. non-professional operators.
The warranty covers all material quality and manufacturing defects recognized during the warranty period by your Dealer or Authorized Service Centre.
The warranty is restricted to the repair or replacement of components recognized as faulty.
The warranty only applies to machines subjected to regular maintenance.
The user must follow all the instructions provided in the accompanying documentation.
The warranty does not cover damages resulting from:

- Failure to become familiar with the documentation accompanying the machine (Instruction manual).
- Professional use.
- Carelessness, negligence.
- External causes (lightning, impact, presence of foreign bodies inside the machine) or incidents.
- Incorrect use or assembly or prohibited by the manufacturer.
- Poor maintenance.
- Modification to the machine.
- Use of non-genuine spare parts (adaptable parts).
- Use of attachments not supplied or not approved by the manufacturer.

WARRANTY APPLICATIONS

1. The warranty applies to all material and manufacturing defects which may arise in every country. No further claims are possible, of whatever nature, direct or indirect, relating to people and/or materials.
2. In the event of a problem or defect, you should first always consult your dealer. In most cases, the dealer will be able to solve the problem or correct the defect.
3. Repairs or the replacement of parts will not extend the original warranty period.
4. Defects which have arisen because of improper use or wear are not covered by the warranty.
5. Your claim upon the warranty cannot be processed if:

- Incorrect or prohibited use or assembly.
- Use of non-genuine spare parts.
- Use of attachments not supplied or approved by the manufacturer.
- Its damage is caused by external influences or foreign bodies such as sand or stones.
- Its damage was caused by non-observance of the instruction manual.
- Normal wear and tear of consumables, such as drive belts, headlights, wheels, blades, safety bolts and wires.
- Normal wear and tear.

6. The purchaser is protected by his own national legislation. The purchaser’s rights envisaged by the national laws in his own country are not in any way restricted by this warranty.

PRORUN regularly improves our products, and you may find slight differences between your machine and the descriptions contained within this operator's manual. Modifications can be made to the machine without notice and without the obligation to update the manual, providing that the essential safety and functional characteristics remain unaltered. Contact PRORUN Customer Service with any questions and for current specifications.

PRORUN / TOPSUN USA INC.
10130 Perimeter Parkway, Suite 140
Charlotte, NC 28216
www.proruntools.com

Zhejiang Zhongjian Technology Co., Ltd
Web: www.topsunpower.cc
E-mail: sales@topsunpower.cc
ADD: No.155 Mingyuan North AVE, Economic Development Zone,
Yongkang, Zhejiang, 321300, P.R. CHINA
Made in China