ROVSUN

PORTABLE AIR CONDITIONER
Instruction Manual

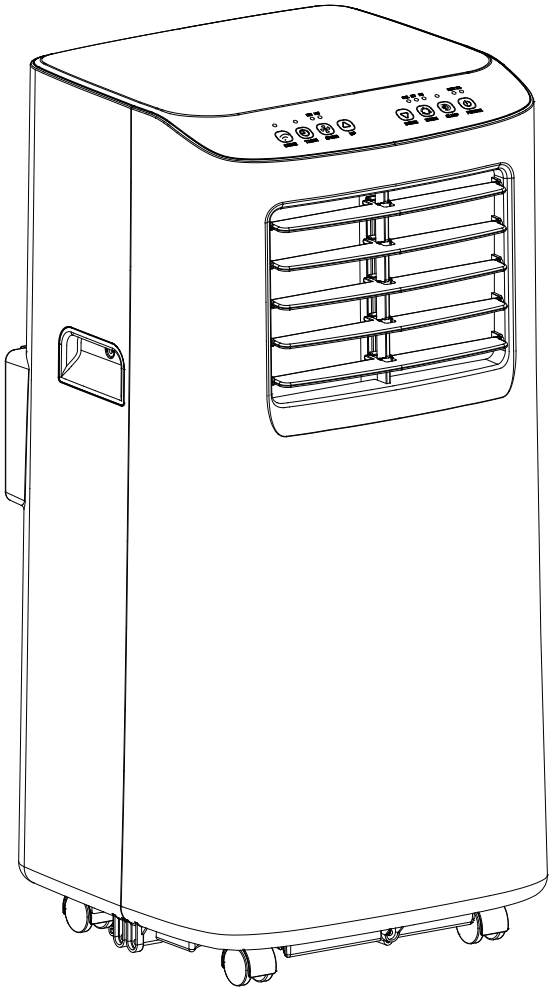

BRAND:ROVSUN
MODEL:JHS-A019G-05KR-D3 / JHS-A019G-06KR-D3

PLEASE READ INSTRUCTIONS CAREFULLY BEFORE ASSEMBLYRETAIN THIS MANUAL FOR FUTURE REFERENCE

Content

I. Notes……..….....3

II. Features and Components..... 5

III. Control Setting..... 7

V. Protection function.....….....9

VI. Installation and adjustment.....10

VII. Drainage Instructions…….....…….....12

VIII. Maintenance .....…13

IX.Troubleshooting.…….....…….….....……...14

Thank you for choosing the luxurious and elegant mobile air conditioning. Please keep the manual for later review, and read the manual carefully before use.

I. Notes

Notes:

*The air conditioning is only suitable for indoor use, and is not suitable for other applications.

*Follow local grid interconnection rules while installing the air conditioning and ensure that it is properly grounded. If you have any question on electrical installation, follow the instructions of the manufacturer, and if necessary, ask a professional electrician to install it.

*Place the machine in a flat and dry place and keep a distance of above 50cm between the machine and the surrounding objects or walls.

*After the air conditioning is installed, ensure that the power plug is intact and firmly plugged into the power outlet, and place the power cord orderly to prevent someone from being tripped or pulling out the plug.

*Do not put any object into the air inlet and outlet of the air conditioning. Keep the air inlet and outlet free from obstructions.

*When drainage pipes are installed, ensure that the drainage pipes are properly connected, and are not distorted or bended.

* While adjusting the upper and lower wind-guide strips of the air outlet, pluck it with hands gently to avoid damaging wind-guide strips.

*When moving the machine, make sure that it is in an upright position.

*The machine should stay away from gasoline, flammable gas, stoves and other heat sources.

* Don't disassemble, overhaul and modify the machine arbitrarily, otherwise it will cause a machine malfunction or even bring harm to persons and properties. To avoid danger, if a machine failure occurs, ask the manufacturer or professionals to repair it.

* Do not install and use the air conditioning in the bathroom or other humid environments.
* Do not pull the plug to turn off the machine.

* Do not place cups or other objects on the body to prevent water or other liquids from spilling into the air conditioning.

*Do not use insecticide sprays or other flammable substances near the air conditioning.

* Do not wipe or wash the air conditioning with chemical solvents such as gasoline and alcohol. When you need to clean the air conditioning, you must disconnect the power supply, and clean it with a half-wet soft cloth. If the machine is really dirty, scrub with a mild detergent.

* The appliance can be used by children aged from 8 years and above and persons with reduced physical, sensory or mental capabilities if they have been given supervision or instruction concerning use of the appliance in a safe way and understand the hazards involved. Children shall not play with the appliance. Cleaning and maintenance shall not be made by children without supervision.

- Risk Of Fire Or Explosion. Flammable Refrigerant Used. To Be Repaired Only By Trained Service Personnel. Do Not Puncture Refrigerant Tubing.
- Risk Of Fire Or Explosion. Dispose Of Properly In Accordance With Federal Or Local Regulations. Flammable Refrigerant Used.

II. Features and Components

1. Features

- 3 in 1 operation system consists of Cool, Dry and Fan functions.
- Auto-evaporative system.
- Two fan speed.
- 1.5m Exhaust hose, window slide bar and adaptor included.
- soft touch with LED display.
- 360 degree casters.
- Chilled air comes from the front for better personal comfort.
- Easy to excess washable mesh filter.
- With WiFi.
- Overflow Protection Function: When water in the water pan exceeds the warning level, the machine will automatically sound an alarm, and the LDC temperature display area will show "FL". At this point, you need to move the drainage pipe connecting the machine or the water outlet to sewer or other drainage area to empty the water. After the water is emptied, the machine will automatically return to the original state.
- Protection Function of the Compressor: To increase the service life of the compressor, it has a 3-minute delay booting protection function after the compressor is turned off.

2.Components:

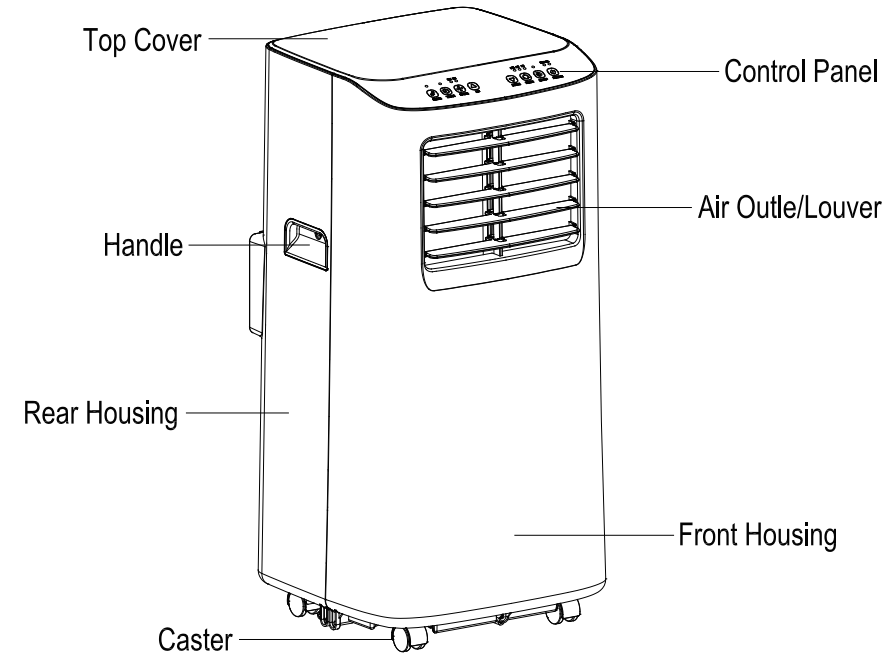

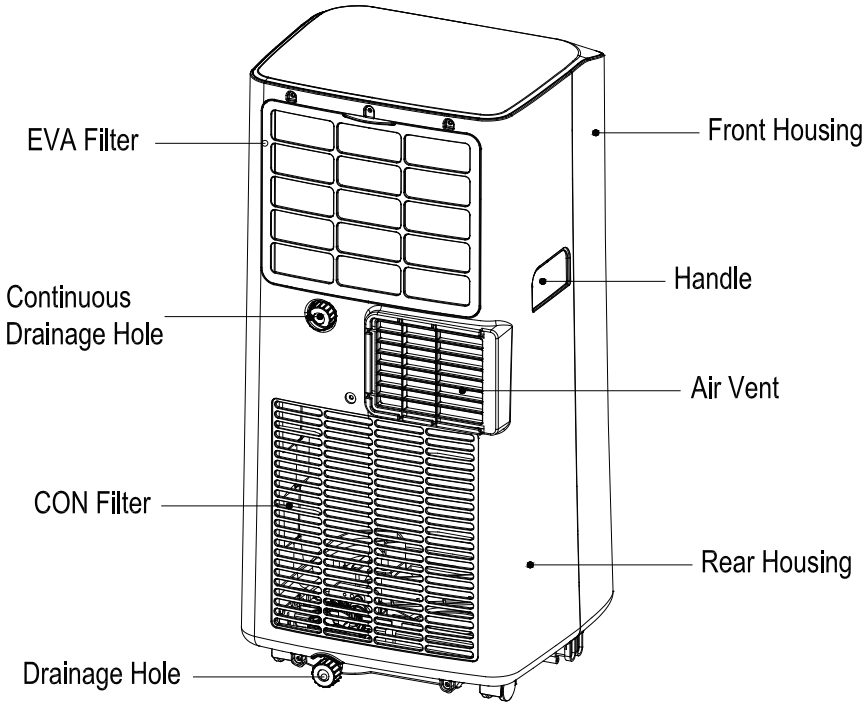

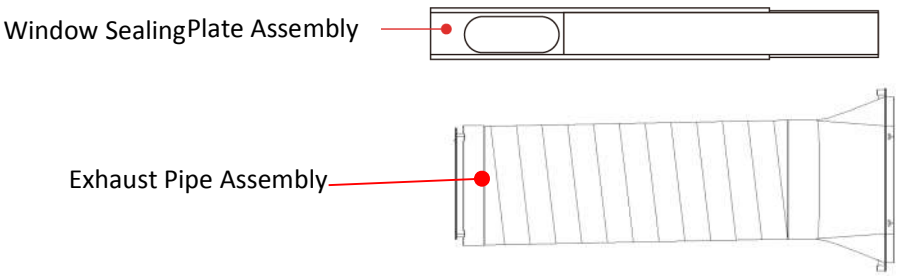

III. Control Setting

1.Control panel operation instructions

1) operation interface：

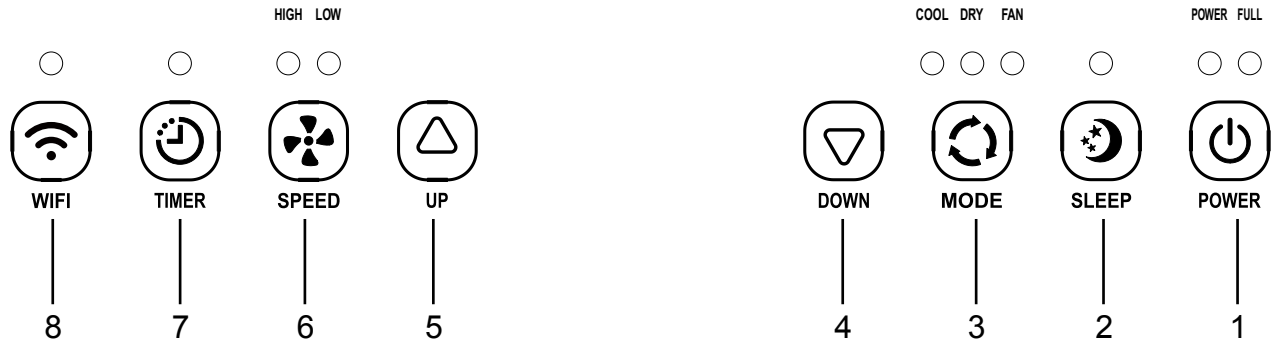

1.Power 2.Sleep 3.Mode 4.Down
5.Up 6.Speed 7.Timer 8.WiFi

1.Power Key: Press the key to turn on and turn off the machine. In the case of power on, press the key to turn off the machine; in the case of power off, press the key to turn on the machine.

2.Sleep Mode: On cooling mode with power on, press this key to turn on or turn off sleep function while it is inapplicable in dehumidify/fan mode.

3.Mode Selection Button: In the case of power on, press this key to switch between cooling → fan → dry mode.

4.Down Key: On setting timer function, press this key could shorten the set time to 01 hour. In cooling mode with the unit turning on, press this key to lower set temperature.

5.Up Key: On timing function setting state, press this key to increase the time to 24 hours. On cooling mode, press this key to raise the set temperature upward.

Remark: press the two keys to change the setting temperature or setting time, operate as follows: While setting temperature, press up key or down key to select the required temperature (not available in fan or dehumidifying mode). While setting time, press up key or down key to select the required time.

6.Wind Speed Selection Button:

1)In cooling mode and fan mode, pressing the button to select high, low wind speed operation.

2)In dehumidifying mode, pressing the button is unavailable.

7.Timer Key:

In the case of power on, press the key to close timer; in the case of power off, press the key to open timer. Press the key, when the timer symbol flashes, press up and down key to select the required timer value. Timer values can be set in 1-24 hours and the timer value is adjusted up or down by one hour.

Remark: press up and down keys in the same time can achieve transfer of ℃/℉

8.WiFi Key: Press the key 5 seconds to turn on WiFi when the unit is off.

2.operation instructions of remote control

1)The remote controller is as follows:

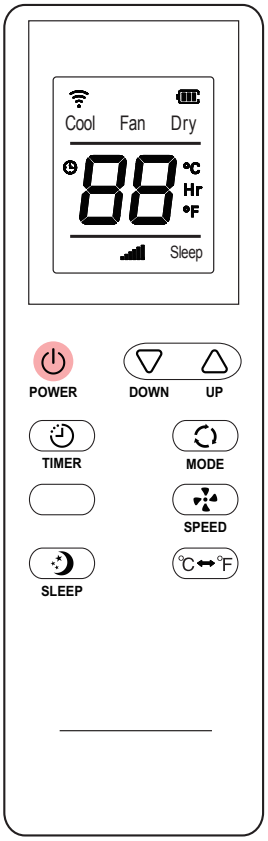

1. Power: Press the Button to turn on or turn off the machine.

2. Timer: press the Button to set timing value.

3. Decrease: press the Button to reduce temperature and timing set value.

4. Mode: press the Button to switch between cooling, air supply, Dehumidify mode.

5. Increase: press the Button to increase temperature and timing set value.

6. Fan: press the Button to select high, low wind speed.

7. Sleep Mode: Press the Button to turn on the sleep mode.

8. press ℃↔℉ the key to switch between Celsius and Fahrenheit.

*NOTE: AAA 1.5VDC battery (included)

V. Protection function

4.1 Frost Protection Function:

In cooling, dehumidification or economic power saving mode, if the temperature of the exhaust pipe is too low, the machine will automatically enter protection status; if the temperature of the exhaust pipe rises to a certain temperature, it can automatically revert to normal operation.

4.2 Overflow Protection Function:

When water in the water pan exceeds the warning level, the machine will automatically sound an alarm, and the LDC temperature display area will show "FL". At this point, you need to move the drainage pipe connecting the machine or the water outlet to sewer or other drainage area to empty the water (details see *Drainage Instruction*s at the end of this chapter). After the water is emptied, the machine will automatically return to the original state.

4.3 Automatic Defrosting (heating and cooling models have this function):

The machine has automatic defrosting function: during defrosting, heating symbol on the display screen will flash.

4.4 Automatic Thermal Protection:

To protect the service life of the machine, the machine has automatic thermal protection in heating mode. During the protection period, the compressor and the lower motor will stop operation and will automatically return to normal heating state after the temperature of the machine recovers.

4.5 Protection Function of the Compressor

To increase the service life of the compressor, it has a 3-minute delay booting protection function after the compressor is turned off.

VI.Installation and adjustment

1.Installation：

Warning: before using the mobile air conditioning, keep it upright for at least two hours.

The air conditioning can be easily moved in the room. In the moving process, ensure that the air conditioning is in the upright position and the air conditioning should be placed on a flat surface. Do not install and use the air conditioning in the bathroom or other humid environments.

1.1 Install the heat pipe assembly （as shown in Fig.1）

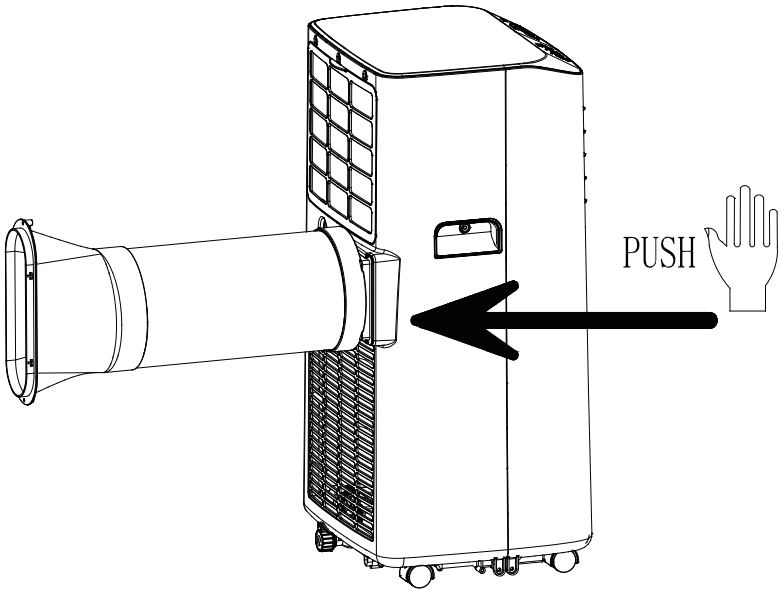

Figure 1

1）take out the outer connector assembly and the exhaust pipe assembly, and remove the plastic bags;

2）insert the heat pipe assembly (the end of the exhaust joint) into the back panel vent slot (push to the left) and complete the assembly (as shown in figure 1).

1.2 Installation of window sealing plate components

1)Half open the window，and mount the window sealing plate assembly to the window (as shown in Fig.2 and Fig.3).Components can be placed in horizontal and vertical direction.

2)Pull various components of the window sealing plate assembly open, adjust their opening distance to bring both ends of the assembly into contact with the window frame, and fix various components of the assembly.

1.2 Install the window sealing plate assembly.

Notes: 1)the flat end of the exhaust pipe joints must be snapped into place.

2)the pipe cannot be distorted nor has substantial turning (greater than 45 °). Keep the ventilation of the exhaust pipe not blocked.

3) only apply to "Vertical" and "Horizontal" window.

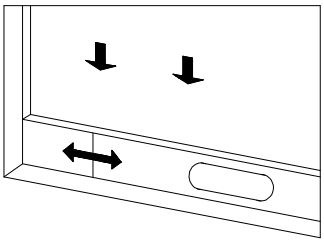

Figure 2

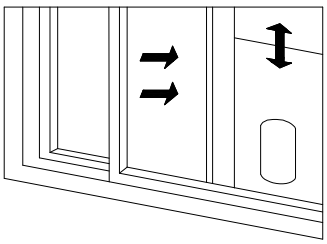

Figure 3

1.3 Install the unit.

1）Move the machine with installed heat pipe and fittings before the window, and the distance between the body and walls or other objects shall be least 50 cm (as shown in Fig.4).

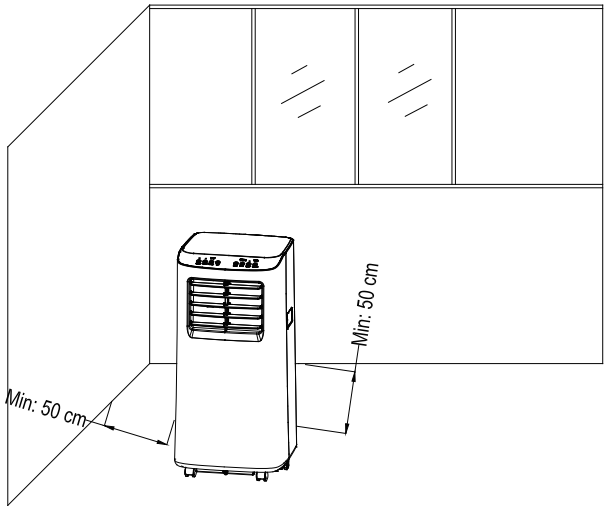

Figure4

1）Elongate the exhaust pipe and snap the flat end of the exhaust pipe joints into the hole of the window sealing plate assembly (as shown in Fig.5 and Fig.6) .

Notes：1.the flat end of the exhaust pipe joints must be snapped into place.

2.The pipe cannot be distorted nor has substantial turning (greater than 45 °).

Keep the ventilation of the exhaust pipe not blocked.

3. The exhaust pipe need to connect with the window sealing plate, and don't move it violently.

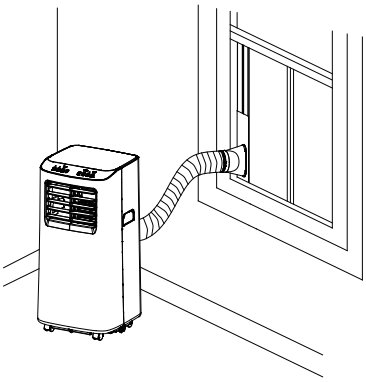

Figure 5

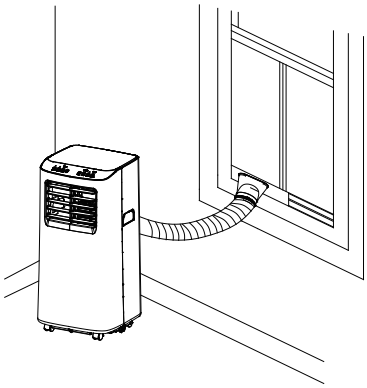

Figure 6

VII. Drainage Instructions

1. Manual drainage:

1） When the machine stops after the water is full, turn off the machine power and unplug the unit from the power source.

Notes: Please move the machine carefully, so as not to spill the water in the water pan at the bottom of the body.

2） Place the water container below the side water outlet behind the body.

3） Unscrew the rotary knob and unplug rubber stopper, the water will automatically flow into the water container.

Notes: 1. Keep the rotary knob and rubber stopper properly.
2. During drainage, the body can be tilted slightly backwards.
3. If the water container cannot hold all the water, before the water container is full, stuff the water outlet with rubber stopper as soon as possible to prevent water from flowing to the floor or the carpet.

4） When the water is discharged, stuff rubber stopper, and tighten the rotary knob.

Notes: 1. Restart the machine after rubber stopper and rotary knob are installed, otherwise condensate water of the machine will flow to the floor or the carpet.

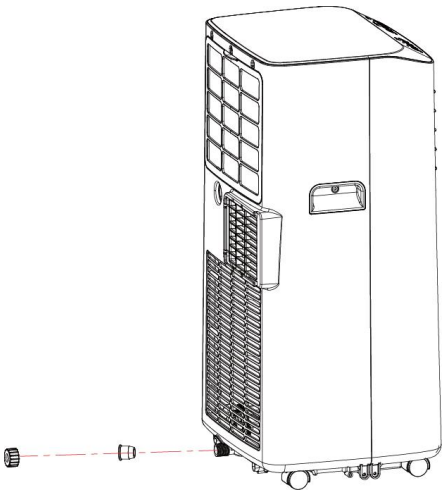

2. Continuous drainage (only applicable to cooling and dehumidification mode), as shown infigure:

1） Unscrew the rotary knob, and unplug rubber stopper.

2） Set the drainage pipe into the water outlet.

3） Connect the drainage pipe to the bucket.

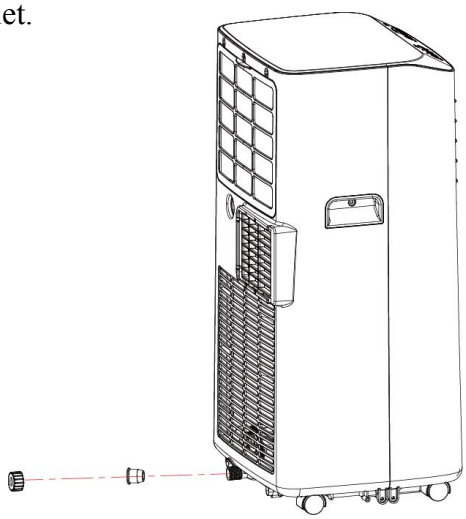

VIII. Maintenance

Cleaning: before cleaning and maintenance, turn off the machine and unplug the unit from the power source.

1．Clean the surface

Clean with surface of machine with a wet soft cloth. Don't use chemicals, such as benzene, alcohol, gasoline, etc; otherwise, the surface of the air conditioning will be damaged or even the whole machine will bedamaged.

2．Clean the filter screen

If the filter screen is clogged with dust, and the effectiveness of the air conditioning is reduced, be sure to clean the filter screen once every two weeks.

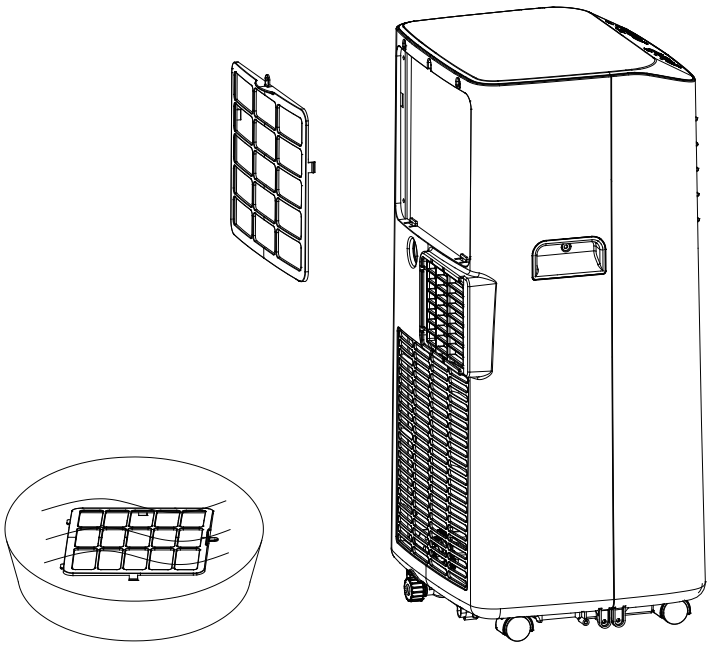

3．Clean the upper filter screen frame

1）Unscrew one screw fixed by EVA filter net and back shell with screwdriver, and take out EVA filter net.

2）Put the EVA filter screen into warm water with neutral detergent (about 40℃ / 104℉) and dry it in the shade after rinsing clean.

IX. Troubleshooting

Do not repair or disassemble the air conditioning by yourself. Unqualified repair will lead to failure of the warranty card, and may cause damage to users or their properties.

Problems	Reasons	Solutions
The air conditioning does not work.	There is no electricity.	Turn it on after connecting it to a socket with electricity.
	The overflow indicator displays "FL".	Discharge the water inside.
	The ambient temperature is too low or too high	Recommend to use the machine in at the temperature of 7-35 ℃ (44-95 ℉).
	In cooling mode, the room temperature is lower than the set temperature; in heating mode, the room temperature is higher than the set temperature.	Change the set temperature.
	In dehumidification mode, the ambient temperature is low.	The machine is placed in a room with an ambient temperature of greater than 17 ℃ (62 ℉).
The cooling or heating effect is not good	There is direct sunlight.	Pull the Curtain.
	Doors or windows are open; there are a lot of people; or in cooling mode, there are other sources of heat.	Close doors and windows, and add new air conditioning.
	The filter screen is dirty.	Clean or replace the filter screen.
	The air inlet or outlet is blocked.	Clear obstructions.
Big Noise	The air conditioning is not placed on a flat surface.	Put the air conditioning on a flat and hard place (to reduce noise).
compressor does not work.	Overheat protection starts.	Wait for 3 minutes until the temperature is lowered, and then restart the machine.
The remote control does not work.	The distance between the machine and the remote control is too far.	Let the remote control get close to the air conditioning, and make sure that the remote control directly faces to the direction of the remote control receiver.
	The remote control is not aligned with the direction of the remote control receiver.	
	Batteries are dead.	Replace batteries.
Displays 'E1'.	The room temperature sensor is abnormal.	Check the room temperature sensor and related circuitry.
Displays 'E2'	The pipe temperature sensor is abnormal.	Check the pipe temperature sensor and related circuitry.
Bluetooth connection unavailable	The connection is not correct.	1.When using Bluetooth mode for the first time, it can only be used after the 2.4G WiFi network is connected successfully. 2.After the WiFi connection is disconnected, wait about 2-3 minutes before you can directly use the Bluetooth control.

If problems not listed in the table occur or recommended solutions do not work, please contact the professional service organization or contact Customer Service for additional support.