*** Installer: Leave this manual with the proud new owner ***

Renaissance Cooking Systems

Owner's Manual

Renaissance
Cooking Systems

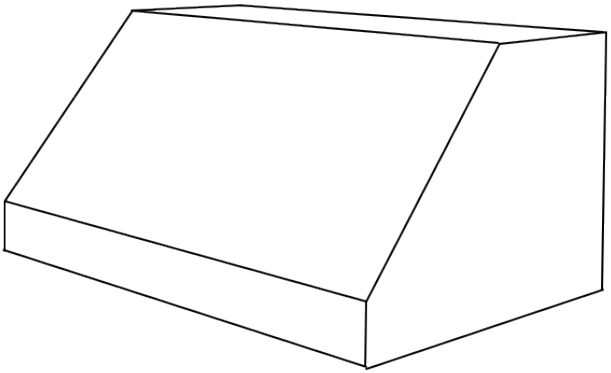

For Residential Use Only

America's Best Value in Outdoor Kitchen Equipment

Installation, Operation, Maintenance Instructions & Parts List

Models:

RVH36A & RVH48B

This owner's manual was updated August 2025

For the latest news, recipes and cooking tips for your new Renaissance Cooking Systems vent hood, check out www.RCSGasGrills.com

VENT HOOD

INSTALLATION INSTRUCTIONS & OWNERS MANUAL

NAME: 36” VENT HOOD WITH SINGLE MOTOR
48” VENT HOOD WITH DUAL MOTOR

PART #: RVH36A
RVH48B

INSTALLER

Please leave this manual for the owner

Serial Number: _____

Model: _____

Date of Purchase: _____

Place of Purchase: _____

EXPLODED VIEW & REPLACEMENT PARTS LIST

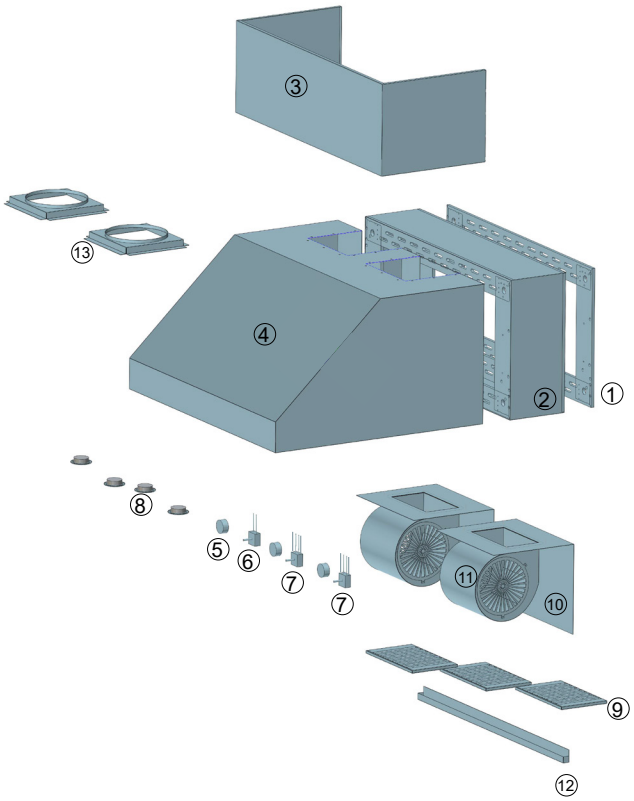

ITEM #	DESCRIPTION	RVH36A		RVH48B	
		PART NO.	QTY	PART NO.	QTY
1	1/2" MOUNTING TEMPLATE	11367	1	11369	1
2	4" VENT HOOD SPACER (optional)	11371	1	11373	1
**2a	8" VENT HOOD SPACER (optional)	11375	1	11377	1
3	DUCT COVER (optional)	11379	1	11381	1
4	VENT HOOD ASSEMBLY	11383	1	11385	1
5	KNOB	11344	2	11344	3
6	LIGHT CONTROLLER	11387	1	11387	1
7	FAN CONTROLLER	11343	1	11343	2
8	LED LIGHT	11388	2	11388	4
9	BAFFLE FILTER - 12"	11389	3	11389	4
10	BLOWER PLATE	11398	1	11398	2
11	1000 CFM BLOWER	11290	1	11290	2
12	GREASE TUBE	11393	1	11395	1
13	TRANSITION COLLAR FOR 8" VENT	11397	1	11397	2
**14	CAPACITOR	11342	1	11342	1

** NOT SHOWN

IMPORTANT SAFETY INSTRUCTIONS

⚠ WARNING ⚠

- Vent Hoods are for residential use only!
- For general ventilation use only. Do not use to exhaust hazardous or explosive materials or vapors
- Use this unit only in the manner intended by the manufacturer.
- Before servicing or cleaning this unit, switch power off at service panel and lock the panel to prevent power from being switched on by accident. If the service panel cannot be locked, securely fasten a prominent warning device, such as a tag, to the service panel.

⚠ WARNING ⚠

TO REDUCE THE RISK OF RANGE TOP GREASE FIRE, PLEASE OBSERVE THE FOLLOWING:

1. Never leave surface units unattended at high settings.
2. Oil-overs can cause smoking and may ignite. Heat oils slowly on low heat.
3. Always turn hood ON five minutes prior to cooking to begin airflow.
4. Clean ventilation filters frequently. DO NOT ALLOW GREASE TO ACCUMULATE ON FAN OR FILTER.
5. Use proper pan size. Always use cookware appropriate for the size of the burner or element.

⚠ WARNING ⚠

IN THE EVENT OF RANGE TOP GREASE FIRE, OBSERVE THE FOLLOWING:

1. Smother the flames with a close-fitting lid, cooking sheet or other metal tray, and then turn off the burner. BE CAREFUL TO PREVENT BURNS. If the flames do not go out immediately, EVACUATE AND CALL THE FIRE DEPARTMENT.
2. NEVER PICK UP A FLAMING PAN.
3. MAKE SURE YOUR VENTILATION SYSTEM IS COMPLETELY TURNED OFF. DO NOT TURN HOOD ON TO TRY AND EVACUATE SMOKE.
4. DO NOT USE WATER, including wet dishcloths or towels - a violent steam explosion may result.

USE AN EXTINGUISHER ONLY IF:

- You know you have a class ABC extinguisher and you already know how to operate it.
- The fire is small and contained in the area where it started.
- The fire department is being called.

HANDLING PRECAUTIONS

- Remove all rings, watches, belt buckles, jewelry and any clothing with metal buttons or snaps to prevent damage to hood.
- DO NOT REMOVE HOOD FROM ITS ORIGINAL CARTON UNTIL YOU ARE READY TO INSTALL IT.
- When you are ready to begin the installation process, remove the hood from its carton and place it on a clean soft blanket.
- Inspect the hood carefully for any damage or imperfections before you begin to install the hood. If any damage or imperfections exist, re-carton the hood and call your dealer IMMEDIATELY. Do not install a damaged hood.
- It is highly recommended that rubber gloves be used to prevent scratches on the hood and to provide you with a firm grip.
- When removing the hood from the carton, locate the filters. The filters are not pre -installed in the hood. The filters are in a box marked filters inside the hood carton.
- Model hood series can be ducted to the top or the rear. Check product guide for additional transitions, wall caps and roof caps.
- All ventilation hoods have a variable speed control blower switch.

NOTE TO THE INSTALLER

- To avoid damage that will not be covered under warranty make sure blowers are free from obstructions (packing and debris) prior to running the blowers. Test run blowers before finalizing installation. Check with manufacturer before attempting to use blower systems other than blower systems.

CLEANING AND MAINTENANCE

Your hood will not function properly if not cleaned regularly and maintained properly. Clean the filters regularly (at least twice a month or every 24 hours of use) by soaking them in soapy water and rinsing them in the dishwasher at the normal cycle. When the filters are removed, the accessible interior of the canopy can be cleaned of grease, again using only soap and water. Burned out LED light bulbs are exchanged in the same way as normal light bulbs. Make sure to only replace them with the same type and wattage.

Make it a habit to turn on the hood on low speed even when you are only boiling water. The cleaning of the outside of the hood depends on the material used as a decorative exterior. For stainless steel and powder coated metals, clean with soap and water only. Do not use abrasive or aggressive chemicals! Check the outside end of the duct at least once a year. If you have an insect screen installed in the duct termination, make sure that it is not broken or dislocated. Filters are dishwasher safe or you may hand wash them with warm soapy water.

PLANNING THE LOCATION FOR YOUR VENT HOOD

Select the proper height to mount the hood. Take into consideration the stature of the person or persons who will be cooking. If mounted at a height greater than 32" above the cooking surface, the hood should be at least 6" wider than the cooking appliance to provide a proper capture of heat and grease. (Refer to the range manufacturer's guidelines) Once the proper height is established, draw a level line where the bottom of the hood will rest. If practical, mount a board equal to the width of the hood along the line so you may rest the hood on it while installing. Mark a centerline on the wall equal to the entire height of the hood to assist with the proper duct alignment and hood placement. Determine stud location and mark it clearly. If only one stud can be located, toggle bolts or additional fastening must be installed to firmly secure the hood to the wall.

⚠ WARNING ⚠

INSPECT ALL MOLDED PACKAGING AND BOXES FOR PARTS BEFORE DISCARDING. ANY DAMAGE MUST BE REPORTED BEFORE INSTALLING THE HOOD. ONCE THE HOOD HAS BEEN INSTALLED, NO RETURN WILL BE ACCEPTED.

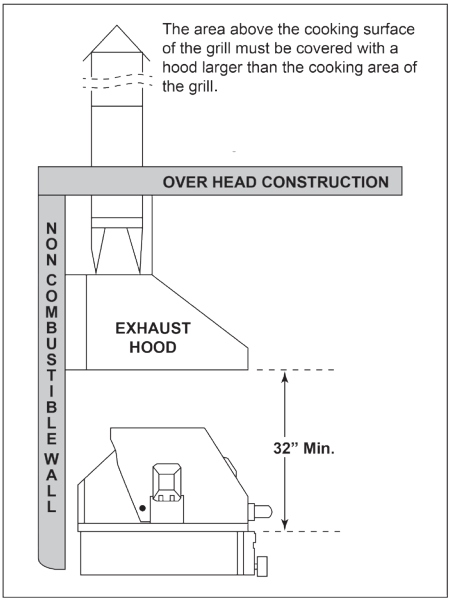

VENTING REQUIREMENTS & SPECIFICATIONS

VENTING REQUIREMENTS

- Do not terminate the vent system in an attic or other enclosed area.
- Do not use 4" (10.2 cm) laundry-type wall caps.
- Use metal/aluminum vent only. Rigid metal/ aluminum vent is recommended.
- Do not use plastic vent.
- Always keep the vent clean to ensure proper airflow.
- Calculate the following figures before installation:
    - o Distance from the floor to the ceiling
    - o Distance from grill's cooking surface to vent hood
    - o Height of hood and vent cover

FOR THE MOST EFFICIENT & QUIET OPERATION:

- A minimum distance of 32" is recommended* between the grill's cooking surface and bottom of vent hood.
- It is recommended that the vent hood be vented vertically through the roof
- Venting size should be uniform.
- Do not use plastic vent.
- Use no more than three 90° elbows.
- Make sure there is a minimum of 24" of straight vent between the elbows if more than one elbow is used.
- Do not install two elbows together.
- The length of vent system and number of elbows should be kept to a minimum to provide efficient performance.
- Use aluminum foil tape to seal all joints in the vent system.
- Use caulking to seal exterior wall or roof opening around the cap. USE 8" ROOF OR WALL VENT CAP MINIMUM.

IMPORTANT:

- A minimum 8-inch round vent (standard for this vent hood) must be used to maintain maximum airflow efficiency.
- Always use rigid type metal/aluminum vents if available to maximize airflow.
- It is important to install the hood at the proper mounting height. Hoods mounted too low could result in heat damage and fire hazard; while hoods mounted too high will be hard to reach and will lose its performance and efficiency.
- Refer to the grill manufacturer's height clearance requirements and recommended vent hood mounting height.

SPECIFICATIONS:

Voltage: 120v / 60 hz
Power: 492 W
Motor: 2 x 240 W
LED: 3 W
Venting: Top Vent or Rear
Vent Vent Size: 8 in. diameter
# of Vents:

- 1 (for 36" model)
- 2 (for 48" model)

INSTALLATION

⚠ WARNING
Severe Injury
Hood may have very sharp edges. Please wear protective gloves if it is necessary to remove any parts for installing, cleaning or servicing.

⚠ WARNING
Excessive Weight
Require three or more persons to move and install this vent hood. Spinal or other bodily injuries could occur if it is not followed.

BEFORE INSTALLING THE VENT HOOD, CHECK FOR PHYSICAL DAMAGES.
THIS VENT HOOD COMES EQUIPPED WITH A POWER CORD.
TEST THE HOOD BEFORE INSTALLATION.

If there is a grinding noise coming from the motor. DO NOT INSTALL IT
Contact us as soon as possible.

1. Read the entire installation guide and users manual thoroughly, understand instructions and warnings.
2. Be familiar with the controls of the vent hood.
3. Place the Vent hood on a flat, stable surface. Connect the vent hood to a designated standard outlet (please refer the product label for the suitable voltage of this unit) and verify no debris has entered the duct openings, then turn on the vent hood.
4. Place all supplied parts and required hardware on a flat, stable surface and VERIFY the existence of all supplied parts.
5. Carefully remove the plastic protective coat from the chimney covers and vent hood if any.

NOTE: To avoid damage to your hood, prevent debris from entering the duct opening.

1. Disconnect power cord, remove the stainless steel baffle filter and grease tunnel.
2. Set aside the stainless steel baffle filters and grease tunnel until the vent hood is properly installed.





SAFETY WARNING: Risk of electrical shock. this vent hood must be properly grounded. Make sure this is done by qualified electrician in accordance with all applicable national and local electrical codes. Before connecting wires, switch power off at service panel and lock service panel to prevent power from being switched on accidentally.

DIMENSIONS - RVH48B

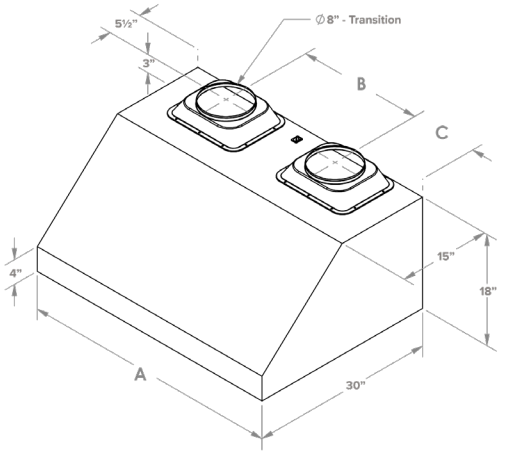

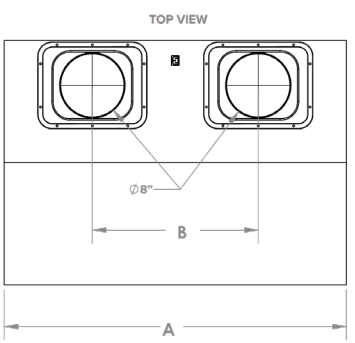

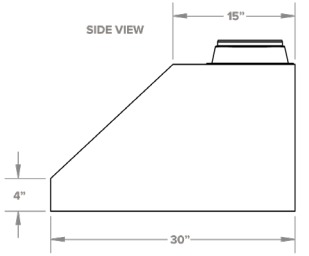

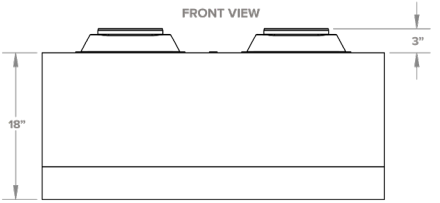

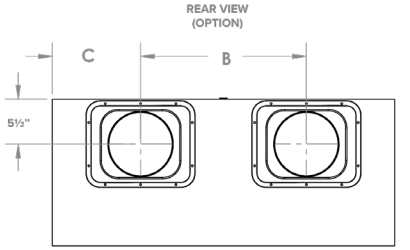

VENT HOOD DIMENSIONS			
MODEL #	A	B	C
RVH48B	48"	20⅜"	13¹³⁄₁₆"

DIMENSIONS - RVH36A

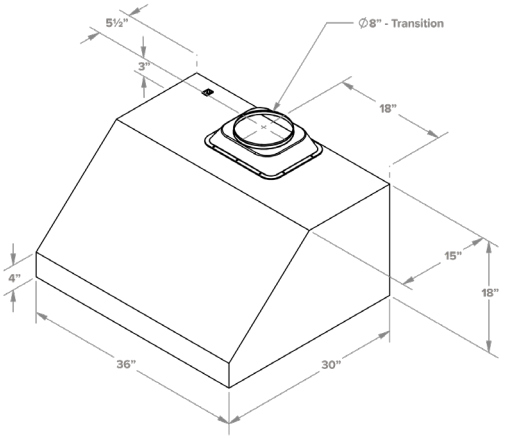

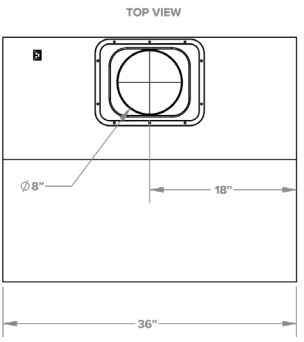

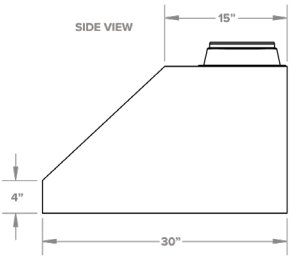

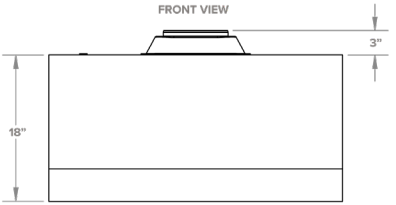

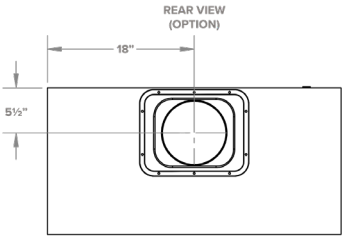

VENT HOOD DIMENSIONS			
MODEL #	WIDTH	DEPTH	HEIGHT
RVH36A	36"	30"	18"

WIRING DIAGRAM

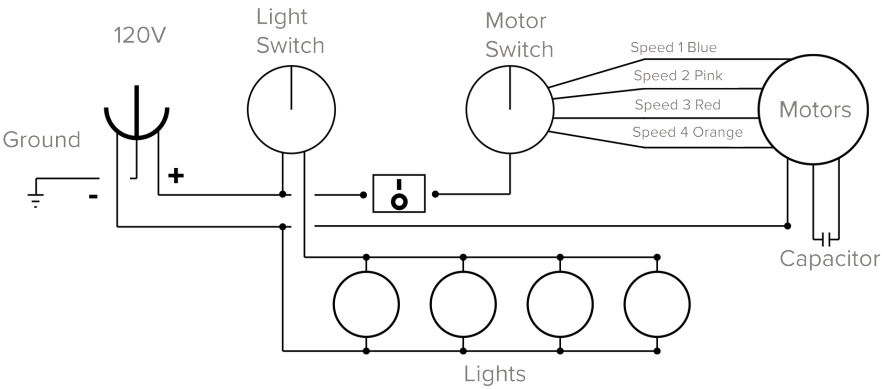

*Number of lights varies between sizes

Renaissance
Cooking Systems

Product Warranty

RCS is proud to provide the industries most comprehensive warranty program.

All RCS **American Renaissance Grills, Cutlass Pro Series Grills and Cutlass Pro Series side burners, sinks, briquette trays, as well as ALL doors and drawers** are warrantied to be free from manufacturer defects for the lifetime of the original owner.

All RCS **Premier Series Grills and Premier Series Side Burners** are warrantied to be free from manufacturer defects for 15 years to the original owner.

All RCS **Refrigeration products** are warrantied to be free from manufacturer defects for 7 years to the original owner.

All **other products** carry a one-year warranty to the original owner.

This RCS warranty is effective for product sales beginning April 14th, 2025.

For service assistance, please reach out to us at the website below.

This warranty excludes normal surface corrosion, discoloration, surface scratches and surface rust which may occur. Improper maintenance, salt spray, chemicals, pesticides will affect the look and integrity of the components of these products. RCS will not be responsible for any damage caused as a result of not following owner's manual instructions. This non-transferrable warranty is limited to the replacement of original (one-time) defective parts, does not include shipping and labor to remove or install replacement parts, if necessary. The owner must retain and submit their original receipt with any warranty claim to receive warranty parts. The warranty applies to the original owner only. Coverage is for residential use only, no commercial applications apply.

For more information, questions or assistance pleasevisit us at RCSGasGrills.com and click the Customer Care Form.

REV. 04/12/2025