SANTOS SAS:
140-150 AVENUE ROGER SALENGRO
69120 VAULX-EN-VELIN (LYON) - FRANCE
TEL. 33 (0) 472 37 35 29 - FAX 33 (0) 478 26 58 21
FAX 33 (0) 478 26 58 21
E-Mail: santos@santos.fr www.santos.fr

SHOP COFFEE GRINDER # 4
COFFEE GRINDER # 1, #01BAR and # 1PS

USER AND MAINTENANCE MANUAL

IMPORTANT: documents included in this manual to be kept:

- **"CE" COMPLIANCE DECLARATION**
- **WARRANTY CERTIFICATE**

Translation of the original version

Model #01	Model #01PS	Model #01BAR	Model #04

Coffee grinders - Fruit juicers - Mixers - Blenders - Drinks dispensers - Planetary mixers
Cheese graters - Ice crushers - Mincers - Vegetable slicers – Dough mixer
Moulins à café - Presse-fruits - Mixers - Blenders - Distributeurs de boissons - Batteurs mélangeurs - Pétrin - Râpes à fromage - Broyeurs à glaçons - Hache-viande - Coupe-légumes

MODELES DEPOSES FRANCE ET INTERNATIONAL
INTERNATIONALLY PATENTED MODELS

ENG

CONTENTS

"EC/EU" COMPLIANCE DECLARATION **3**
IMPORTANT SAFEGUARDS **4**
IMPROPER USE *4*
ELECTRICAL CONNECTION *5*
RECYCLING THE PRODUCT AT THE END OF ITS SERVICE LIFE *5*
YOUR COFFEE GRINDER # 1, # 1PS and # 4 ..... **6**
USING THE APPLIANCE **6**
ADJUSTING THE GRIND *6*
SERVICING *6*
MAINTENANCE *6*
Spare parts: 6
Prolonged periods of non-use: *7*
Replacing the grindstones: *7*
ADJUSTING THE MINIMUM GAP BETWEEN THE GRINDING-WHEELS *8*
FAULT FINDING **9**
The machine will not start: 9
The machine stops because the motor has overheated: 9
The machine stops because of an overload: 9
MACHINE TECHNICAL SPECIFICATIONS **10**
Wiring diagram 110-120V 50/60Hz Model #1, 1PS *11*
Wiring diagram 220-240V 50Hz Model #1, 1PS *12*
Wiring diagram 220-240V 60Hz Model #1, 1PS *13*
Wiring diagram 110-120V 50/60Hz Model #01BAR *14*
Wiring diagram 220-240V 50Hz Model #01BAR *15*
Wiring diagram 220-240V 60Hz Model #01BAR *16*
Wiring diagram 100-120V 50/60Hz Model #4 ..... *17*
Wiring diagram 220-240V 50Hz Model #4 ..... *18*
Wiring diagram 220-240V 60Hz Model #4 ..... *19*
Figures *20*
WARRANTY CERTIFICATE **23**

APPLIANCE IDENTIFICATION PLATE **23**

ENG

“EC/EU” COMPLIANCE DECLARATION

THE MANUFACTURER:

SANTOS SAS - 140-150, Av. Roger SALENGRO 69120 VAULX-EN-VELIN (LYON) FRANCE

declares that the appliance intended for the professional market described below:

Description: **Shop coffee grinder**
Type number: **01, 01BAR, 01P, 01PS, 04**

complies with:

- the statutory provisions defined in appendix 1 of the European "machines" directive n°**2006/42/EC** and the national legislation transposing it
- the statutory provisions of the following European directives and regulations:
  - N° 2014/35/EU (low voltage directive)
  - N° 2014/30/EU (EMC directive)
  - N° 2011/65/EU (RoHS directive)
  - N° 2012/19/EU (WEEE directive)
  - N° 1935/2004/EC (regulation) relating to materials and articles intended to come into contact with foodstuffs
  - N° 10/2011/EU (regulation) plastic materials and articles intended to come into contact with food

Harmonised European standards used to give presumption of conformity with the essential requirements of the above-mentioned directives:

- NF EN ISO 12100: 2010: Safety of machinery - General principles for design
- NF EN 60204-1: 2018: Safety of machinery - Electrical equipment of machines-General requirements
- NF EN 1672-2: 2020, Food processing machinery – Basic concepts – Hygiene requirements
- NF EN 60335-1: 2013 Safety of household and similar electrical appliances
- EN 60335-2-64:2004 Part 2-64: Particular requirements for commercial electric kitchen machines.

Drawn up in VAULX-EN-VELIN on: **01/04/2022**
Signatory’s position: **CHIEF EXECUTIVE OFFICER**
Signatory’s name: **Aurélien FOUQUET**

Signature:

ENG

IMPORTANT SAFEGUARDS

When using, cleaning or maintaining the machine, always follow these instructions:

Read all instructions

Note: You will find it easier to understand the next few paragraphs if you refer to the diagrams at the end of this manual.

IMPROPER USE

1. Do not use this appliance for grinding anything other than roasted coffee beans.
2. Never operate the appliance with no coffee beans in the bean container.
3. Remove from the coffee beans any foreign bodies which may damage the grinding wheels (metal staples, stones, etc.).
4. For electrocution risk protection reasons, never plunge the base into water or any other liquid.
5. Use a hose nor a pressure hose for cleaning: this is forbidden
6. Never touch the moving parts.
7. Unplug the appliance before carrying out any work on it: cleaning, maintenance or repair.
8. Use the appliance if the power cord is damaged. It must be replaced by a special assembly available from an approved SANTOS dealer or from SANTOS itself.
9. The use of spare parts other than certified SANTOS original parts is prohibited.
10. Turn the On/Off switch (**13**) to "**0"** when the appliance is not operating.
11. Connect several appliances to the same power socket.
12. Use the appliance outdoors.
13. Never place the appliance close to or on a source of heat.
14. This appliance is a professional machine designed exclusively for professional use. It is not designed for household use.
15. This appliance is not designed for use by people (including children) whose physical, sensorial or mental capacities are impaired or by people with no experience or knowledge, unless they have been supervised or given training in the use of the appliance beforehand by a person responsible for their safety. Supervise children to ensure they do not play with the appliance.
16. This appliance is intended for use in communal areas, e.g. in the kitchens of restaurants, canteens, hospitals and artisan trades such as bakeries, butcher's shops, etc., but not for continuous mass production of food.

ENG

ELECTRICAL CONNECTION

- The electric power supply for the machine is available in 3 single-phase voltages:
  - 110-120 V 50/60 Hz:
  - 220-240 V 50 Hz:
  - 220-240 V 60 Hz:

Note: This appliance can operate at both 50Hz and 60Hz without any adjustments.
Line protection: the machine should be connected to a standard 2-pole + earth electric socket. The system should be fitted with an RCD and a fuse rated at 16A. **The appliance must be earthed**.

CARE:

- Before connecting the machine, check that the mains electrical voltage is the same as the voltage for your appliance. Its value is shown:
  - ➢ either on the identification plate under the machine.
  - ➢ or on the identification plate on the last page of this manual.
- If the power cable is damaged, it should be replaced by a special assembly available from approved SANTOS dealers or from SANTOS.

CARE: Check that the On / Off switch (**13**) is in the **0 position** before connecting the power cable plug to your mains electric power socket (fig. A).

RECYCLING THE PRODUCT AT THE END OF ITS SERVICE LIFE

This equipment is marked with the selective sorting symbol relating to wastes from electrical and electronic equipment. It signifies that this product should be taken over by a selective collection system conforming to the Guideline 2012/19/EU (WEEE) – part Professional Equipment – so that it can be either recycled or dismantled in order to reduce any impact on the environment.

For more information, please contact your Retailer or the SANTOS.

For eliminating or recycling components of equipment, please contact a specialized company or contact SANTOS.

The electronic products not undergoing a selective sorting are potentially dangerous for the environment.
The damaging materials should be eliminated or recycled according to the regulations in force.

ENG

YOUR COFFEE GRINDER # 1, # 1PS and # 4

- The coffee grinder is designed especially for hotels, restaurants, community catering, for the drawer version, and for coffee roasters.
- The robust frame of the appliance is made of cast aluminum and painted metal. The transparent hopper is made of transparent polycarbonate transparent and contains 1 kg beans.
    - Model # 1 and # 1PS: The appliance is usually supplied with a grind-collector drawer (with a capacity of 800 g). But the bag- grip model can also be supplied on request (maximum bag depth of 150 mm)
    - Model # 4: The appliance is delivered with a "bag grip" system as standard (maximum bag height: 280 mm),
- A button for adjusting the fineness of the grind caters for all types of coffee grind (fine grind, espresso, filter coffee, medium or coarse grind).
- The special hardened steel grinding wheels (Ø 63.5 mm) guarantee a fine and even grind.

USING THE APPLIANCE

ADJUSTING THE GRIND

- Turn the grinding-wheel gap adjuster button 6 clockwise for a coarser grind and anticlockwise for a finer grind. The factory setting is for the finest grind, the grinding-wheels nearly touching each other.

SERVICING

- Clean the coffee outlet, the coffee-bean holder and the grinding mechanism from time to time. Always turn the appliance off (switch **13** on position 0) and unplug it.

MAINTENANCE

Before carrying out any work on the appliance, it must in all cases be unplugged from the mains power supply and the motor start capacitor discharged:

Discharging the capacitor:

Use a screwdriver with insulated handle to touch the 2 connectors on the capacitor. The appearance of an electric arc shows that the capacitor has discharged.

Spare parts:

This machine requires no specific maintenance. The bearings are lubricated for life.
If work is required to replace worn parts such as the grindstones or the electric or other components, refer to the parts list (see exploded view at the end of the manual).

ENG

IMPORTANT: It is prohibited to use spare parts other than those certified made by SANTOS

For **all spare part orders** (see references in the exploded view at the end of the manual), state:

- **the type,**
- **the machine serial number and**
- **the electrical specifications** ()

recorded under the machine.

Prolonged periods of non-use:

There are no problems with this appliance in the event of prolonged periods of non-use. You are simply advised to clean it before use and check that the components of the appliance are in good condition (e.g. power cord, seals and other spare parts).

Replacing the grindstones:

IMPORTANT: always change both 2 grindstones (17) at the same time. (use SANTOS reference 00001B)

The 2 grinding wheels are identical and can be fitted equally either on the moving plate **(18)** (moving grinding wheel) or on the cast metal adjustment block **(19)** (fixed grinding wheel).

1. Stop the machine by putting the switch **(13)** to "0" and disconnect the power supply cord.
2. Close the shutter **(3)** on the bean hopper **(2)**. Take off the bean hopper **(2)**.
3. Turn the grinding wheel gap adjuster button **(6)** clockwise until it comes to a halt at the "**COARSE**" setting."
4. Unscrew the nuts **(16)** and remove the whole grinding unit **(15)**, to gain access to the grinding wheels.
5. Change the grinding wheels (3 fastening screws) after carefully cleaning the supporting surfaces.
   TAKE CARE: *The slightest small coffee particle under the grinding wheel may prevent the machine from operating correctly. It is recommended that the grinder body is cleaned with a compressed air jet or a dry brush.*
6. Reassemble the grinding unit **(15)** and adjust the grinding gap to its minimum setting.

TAKE CARE

- Before tightening the fastening nuts **(16)** on the grinding unit **(15)**, check that the dial **(4)** of the grinding wheel adjuster button **(6)** is set to "**COARSE**"" This precaution is essential to prevent any risk of the grinding wheels being brought

ENG

too close to each other, which could cause damage to the grinding unit.

ADJUSTING THE MINIMUM GAP BETWEEN THE GRINDING-WHEELS

This should be done after replacing the grinding wheels.

Models: #01, #01PS, #01P, #04

1. Plug the appliance in and run it empty.
2. Unscrew hexagon socket screw **(7)** on the dial **(4)** using a 2-mm Allen wrench. Check that the dial **(4)** is free to rotate without turning button **(6)**.
3. Turn button **(6)** anticlockwise until the grinding wheels come into contact (a slight sound of friction will be heard) then back one notch in the reverse direction.

ATTENTION
This is a delicate operation, and prolonged contact between the grinding wheels should be avoided, since this could damage them.

4. Turn the appliance off by placing switch **(13)** on **"0"**.
5. Without moving the button **(6),** place the dial **(4)** on the **"FINE"** position then tighten the hexagon socket screw **(7)** fully home**.**
6. Run the machine empty to check that the grinding wheels rotate without touching each other on the finest setting. If this is not the case, repeat the above procedure.

Model: #01BAR

1. Plug the appliance in and run it empty.
2. Unscrew the locking screw **(21)** of the graduated ring **(20)**. Check that the ring **(20)** turns freely without driving the adjusting button **(6)**
3. Turn button **(6) counte**rclockwise until the grinding-discs come into contact (a slight rubbing noise can be heard) then turn slightly in the opposite direction so that they are no longer touching one another.

BE CAREFUL
This is a delicate operation and prolonged contact between the grinding-discs should be avoided as this could damage them.

4. Stop the machine by pressing the On/Off button **(13)**.
5. Without moving button **(6),** align the **"0"** of the graduated ring **(20)** with the red index mark **(22)** (ring at end position), then tighten the locking screw **(21) without moving the graduated button or the adjusting button.**
6. Run the machine empty in the finest grind position ("0"), to check that the grinding-discs rotate without touching other. If this is not the case, repeat the above procedure.

ENG

FAULT FINDING

Identify the exact reason the appliance stopped.

In every case: If the problem persists, switch off the power supply to the machine (unplug the cord from the mains socket) and call in the maintenance service or contact a SANTOS approved dealer.

The machine will not start:

- Check: the mains power supply and the condition of the power supply cord,
- Note: the switch should be lit when on the "1" position.
- Check that there are no foreign bodies stuck between the grinding wheels.

The machine stops because the motor has overheated:
(the metal casing around the motor unit is hot)

In the event of overheating, the motor stops.
The overheating protection system resets automatically; wait for the motor to cool (15 to 30 minutes), before restarting the machine.

The machine stops because of an overload:
If the motor is blocked (foreign body, something too hard), the excess current protection system **(14)**, located under the appliance will be triggered automatically and cut off the electrical power to the motor.

- Set the On / Off switch **(13)** to **"0"** position, disconnect the appliance.
- Correct the fault then press the excess current protection button **(14)**
- Press the On/Off switch **(13)** (position I).

If the problem persists, check the following points:

- Check that the grinding wheels do not touch each other.
- Check the state of wear of the grinding wheels (grinding too fine with worn grinding wheels can result in a motor overload like this)
- If there are no foreign bodies preventing the appliance from working, then check and replace the motor starter relay then the capacitor.

ENG

MACHINE TECHNICAL SPECIFICATIONS

ELECTRICAL SPECIFICATIONS (1)				
Model		# 1, # 1PS		# 4
Supply voltage	.(V)	220-240	100-120	220-240
Frequency	(Hz)	50	50/60	60
Motor:				
Power input	(W)	600	650	650
Speed	(rpm)	1500	1500/1800	1800
Average capacity	(kg/h)	14		14
Hopper capacity	(kg)	1		1
Grind drawer capacity	(kg)	0.800		
Maximum bag height	(mm)	150		280
Dimensions: Height	(mm)	550		700
Width	(mm)	250		220
Depth	(mm)	320		320
Weight: Net weight	(kg)	15		19
Packaged weight	(kg)	16		20,4
Noise : (2) L_{pA} incertitude K_{pA} = 2.5dB	(dBA)	74		74

(1) These ratings are provided as a rough guide. The exact electrical specifications can be found on the rating plate.

(2) Noise level measured with sound pressure appliance in operation 1 m from its centerline in accordance with standard EN 31201.

F	GB	D	N	E	I	A
JAUNE	YELLOW	GELB	GEEL	AMARILLO	GIALLO	اصفر
BLANC	WHITE	WEISS	WIT	BLANCO	BIANCO	ابيض
NOIR	BLACK	SCHWARZ	ZWART	NEGRO	NERO	اسود
BLEU	BLUE	BLAU	BLAUW	AZUL	BLU	ازرق
ROUGE	RED	ROT	ROOD	ROJO	ROSSO	احمر
MARRON	BROWN	BRAUN	BRUIN	MARRON	MARRONE	بني
ORANGE	ORANGE	ORANGE	ORANJE	NARANJA	ARANCIONE	
VIOLET	VIOLET	LILA	PAARS	VIOLETA	VIOLA	
GRIS	GREY	GRAU	GRIJS	GRIS	GRIGIO	
VERT / JAUNE	GREEN / YELLOW	GRÜN / GELB	GROEN / GEEL	VERDE / AMARILLO	VERDE / GIALLO	اخضر / اصفر

ENG

Wiring diagram 110-120V 50/60Hz Model #1, 1PS

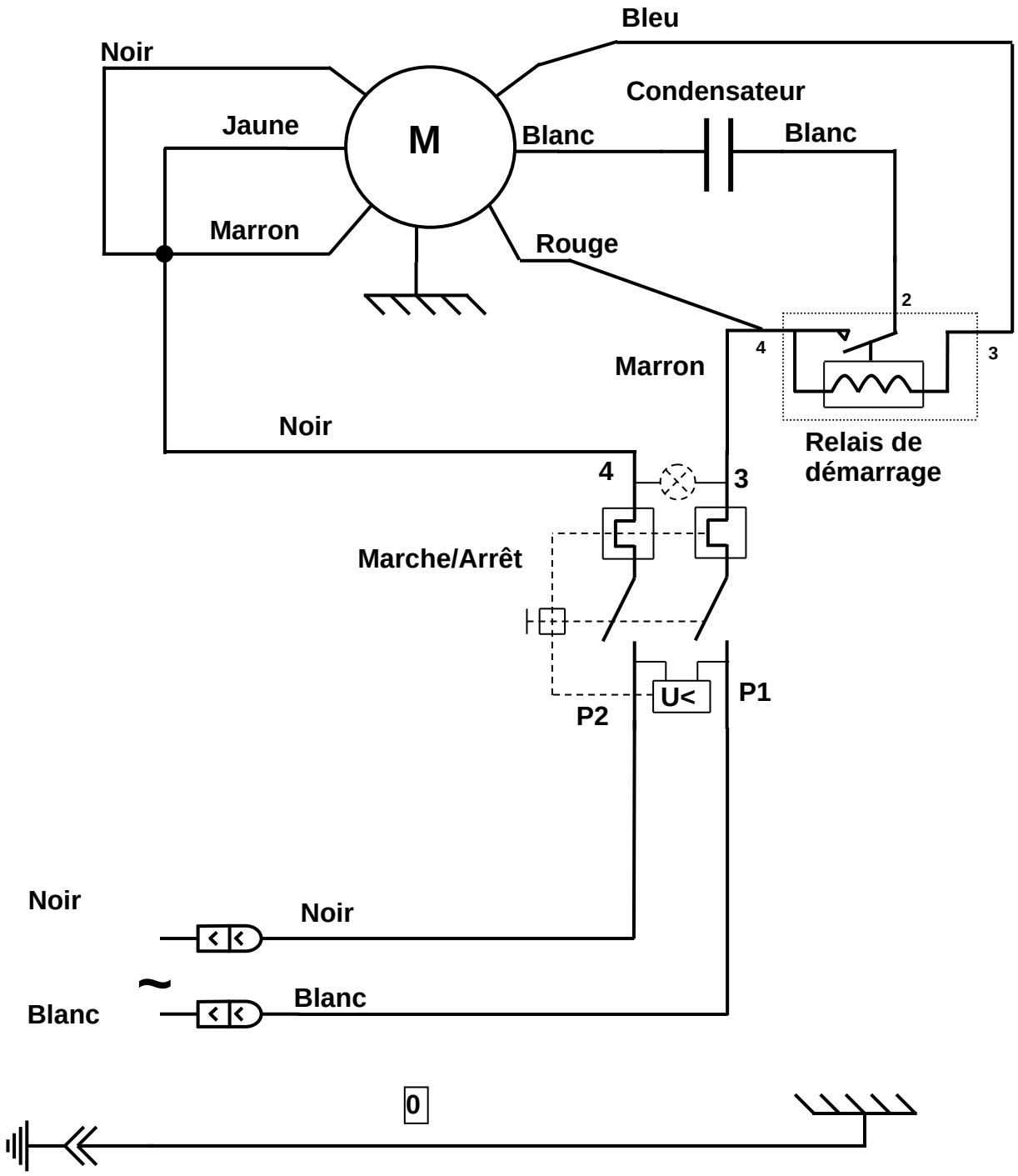

ENG

Wiring diagram 220-240V 50Hz Model #1, 1PS

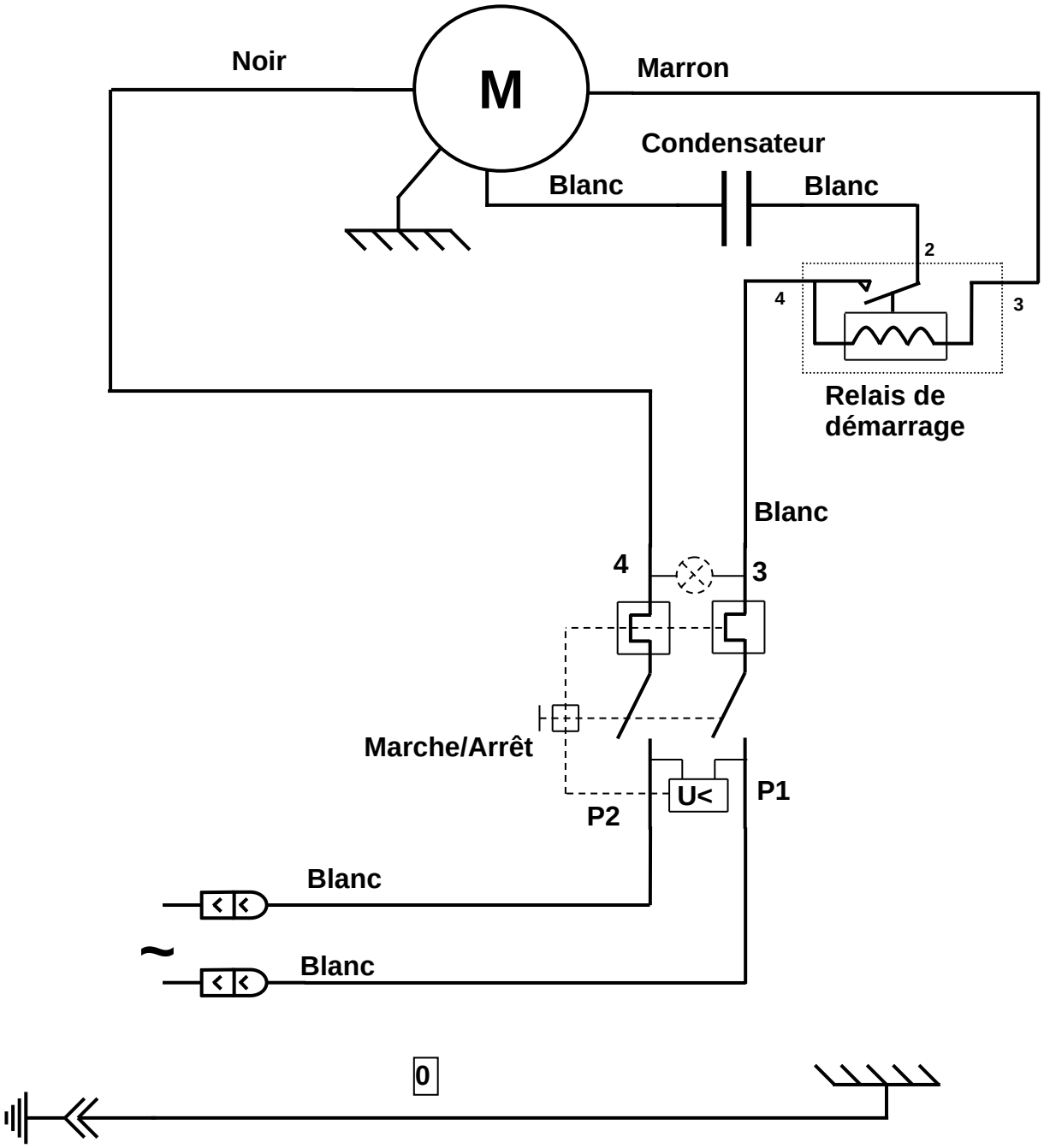

ENG

Wiring diagram 220-240V 60Hz Model #1, 1PS

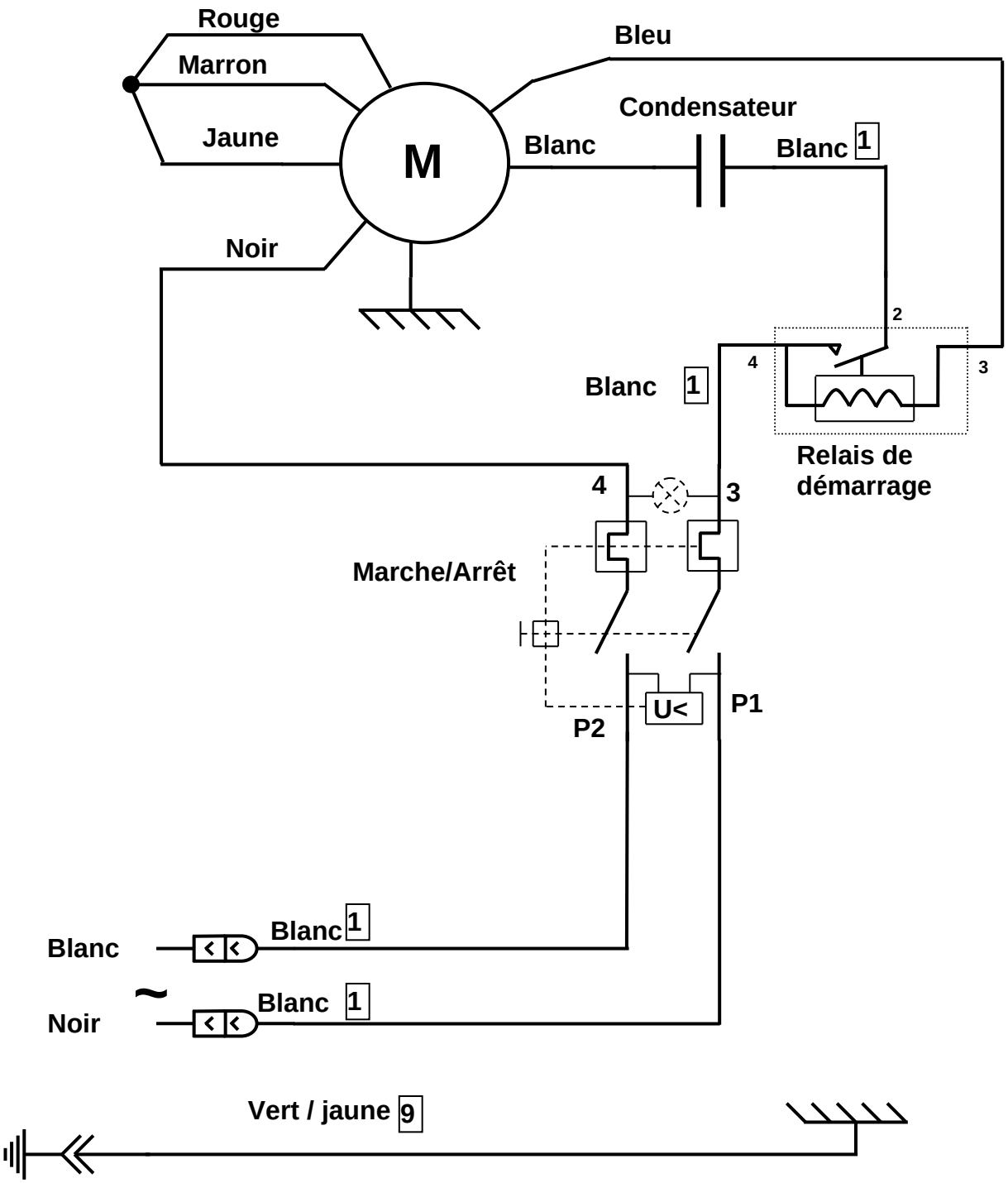

ENG

Wiring diagram 110-120V 50/60Hz Model #01BAR

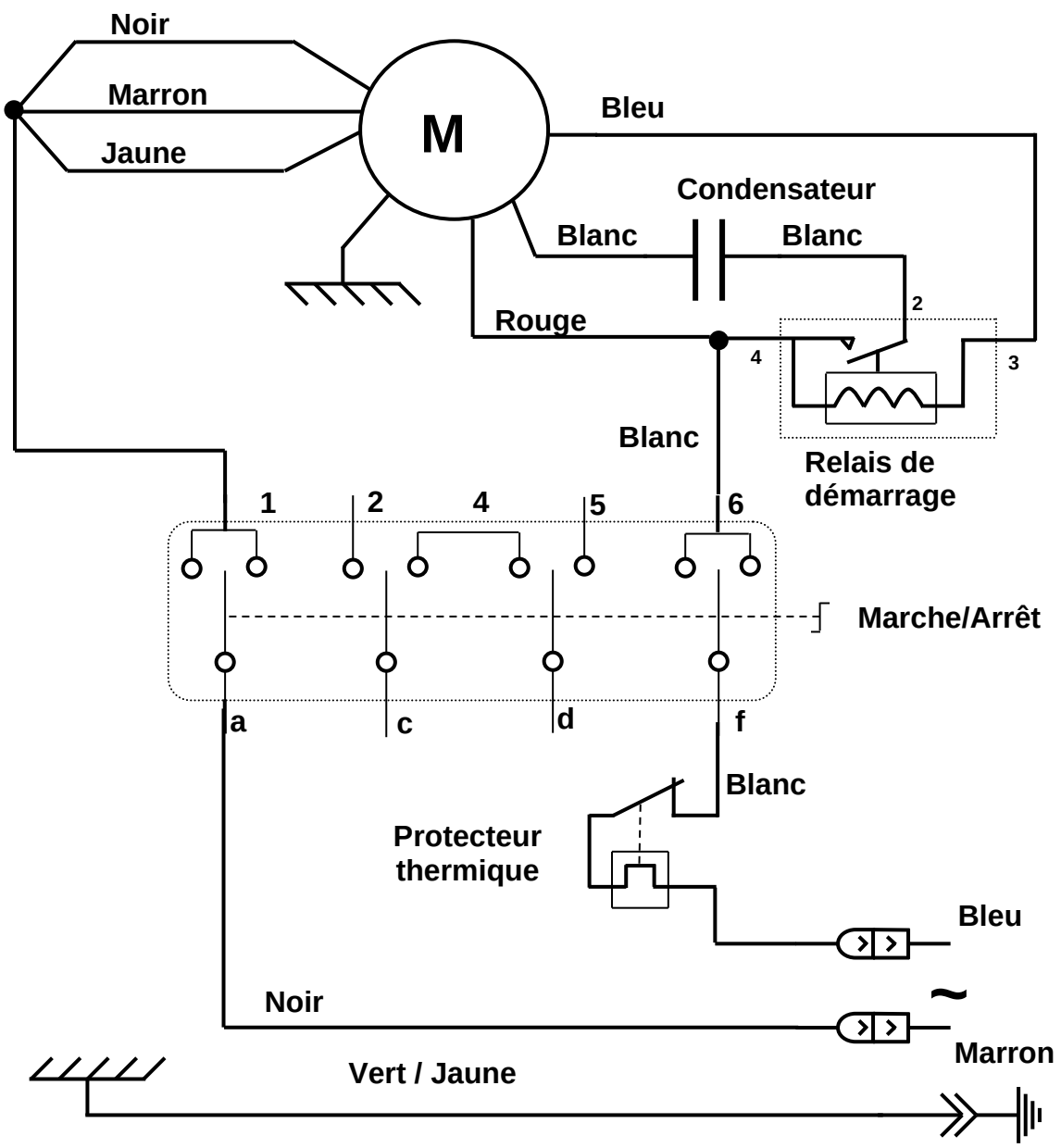

ENG

Wiring diagram 220-240V 50Hz Model #01BAR

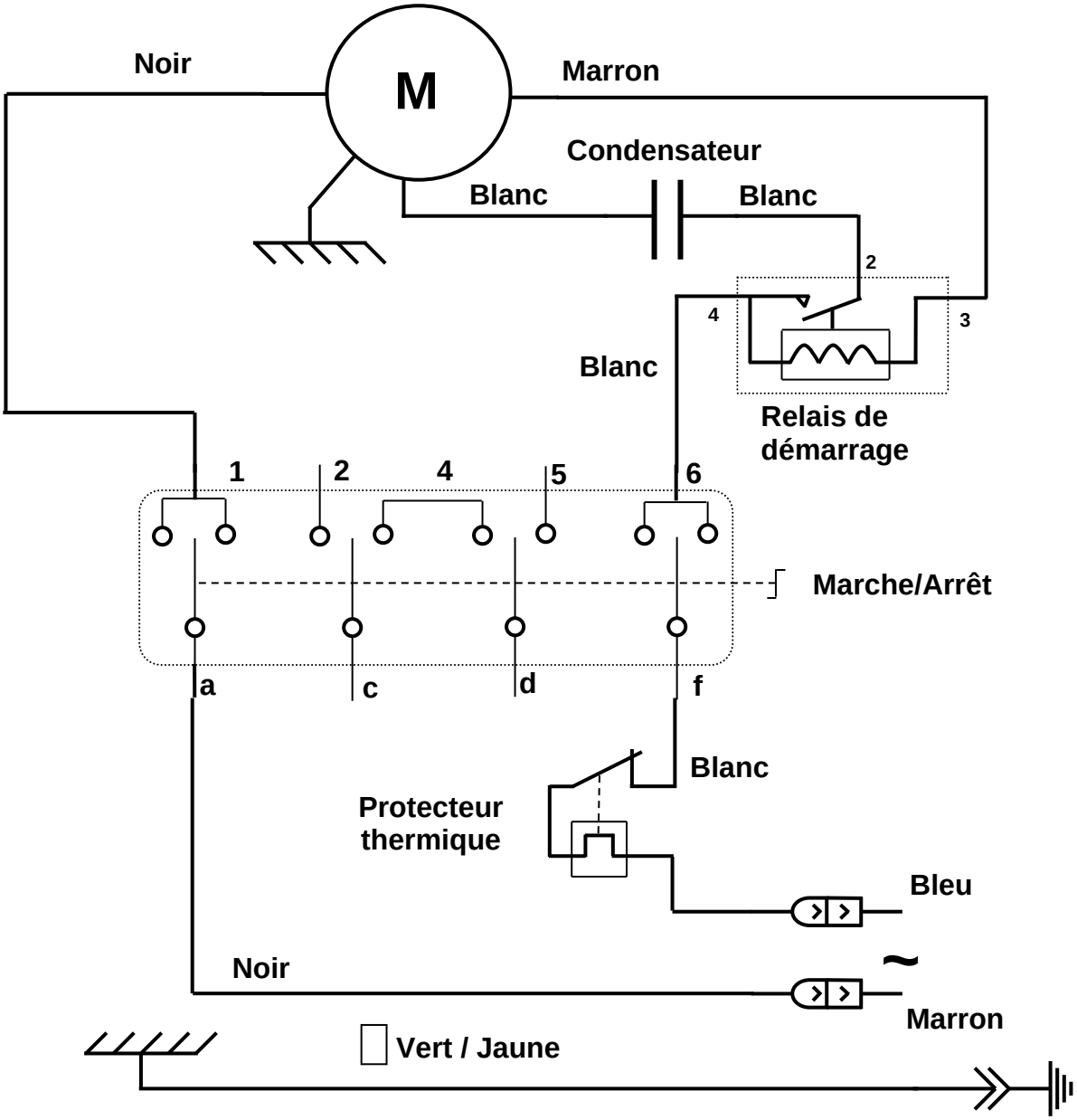

ENG

Wiring diagram 220-240V 60Hz Model #01BAR

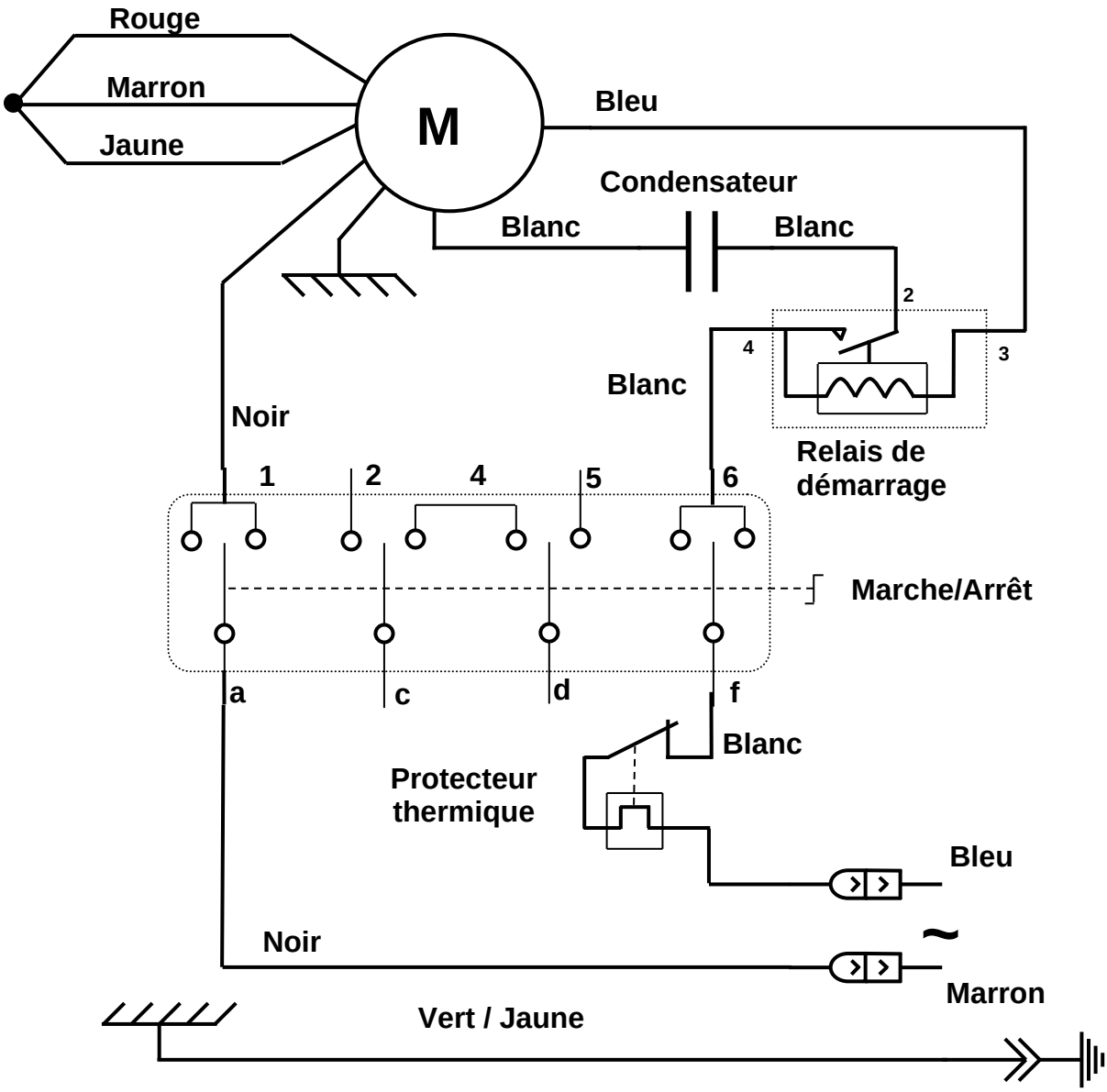

ENG

Wiring diagram 100-120V 50/60Hz Model #4

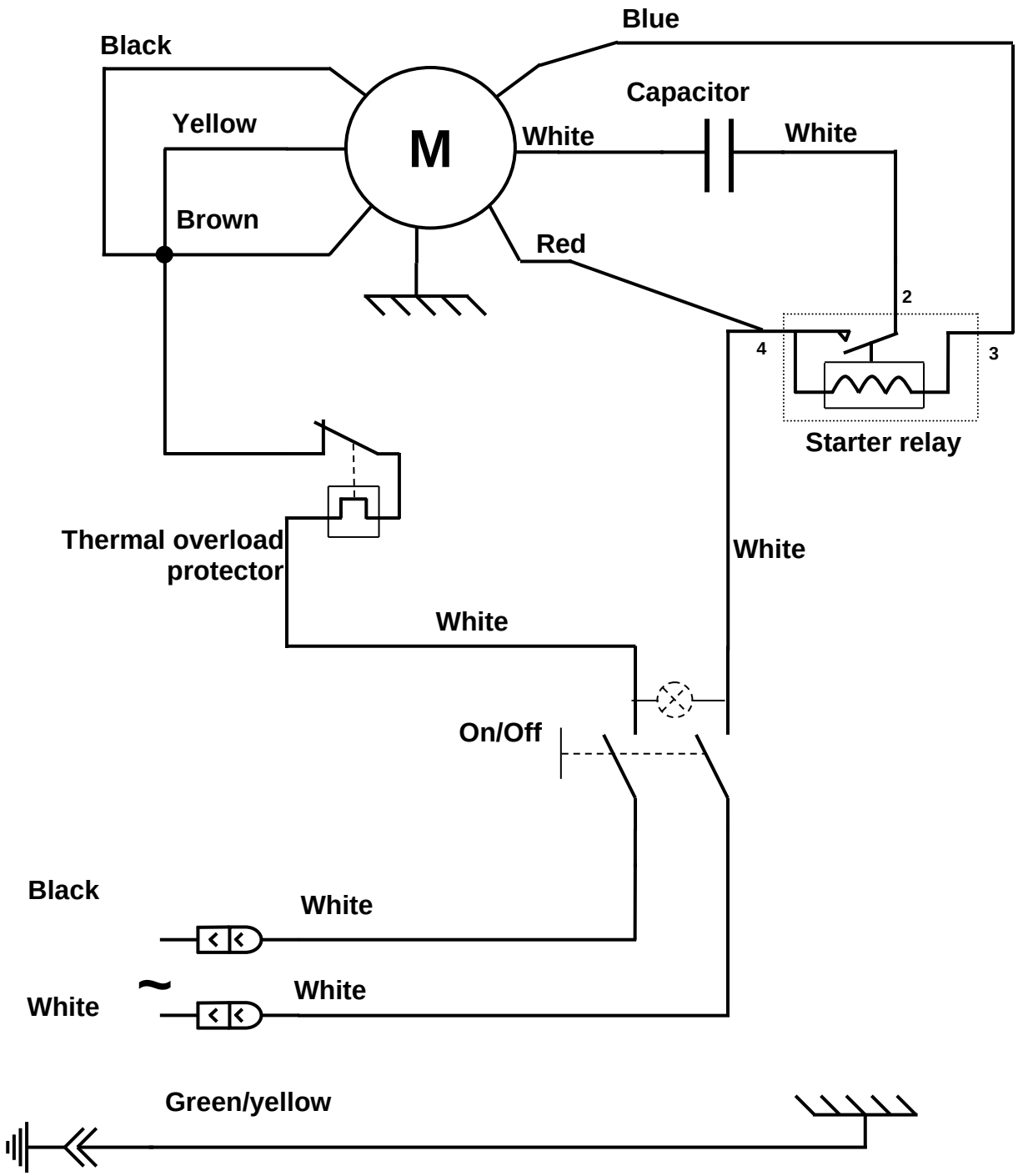

ENG

Wiring diagram 220-240V 50Hz Model #4

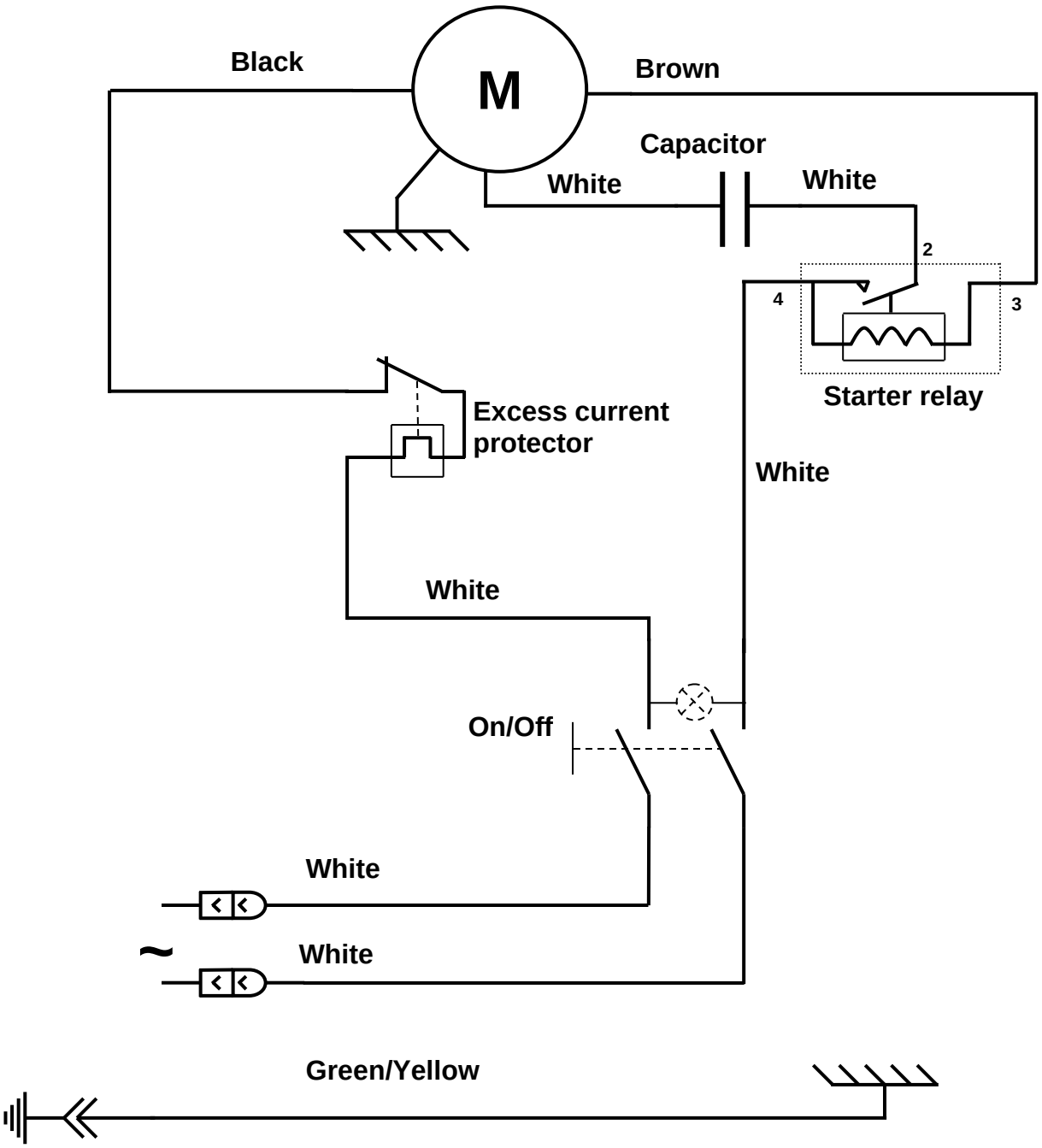

ENG

Wiring diagram 220-240V 60Hz Model #4

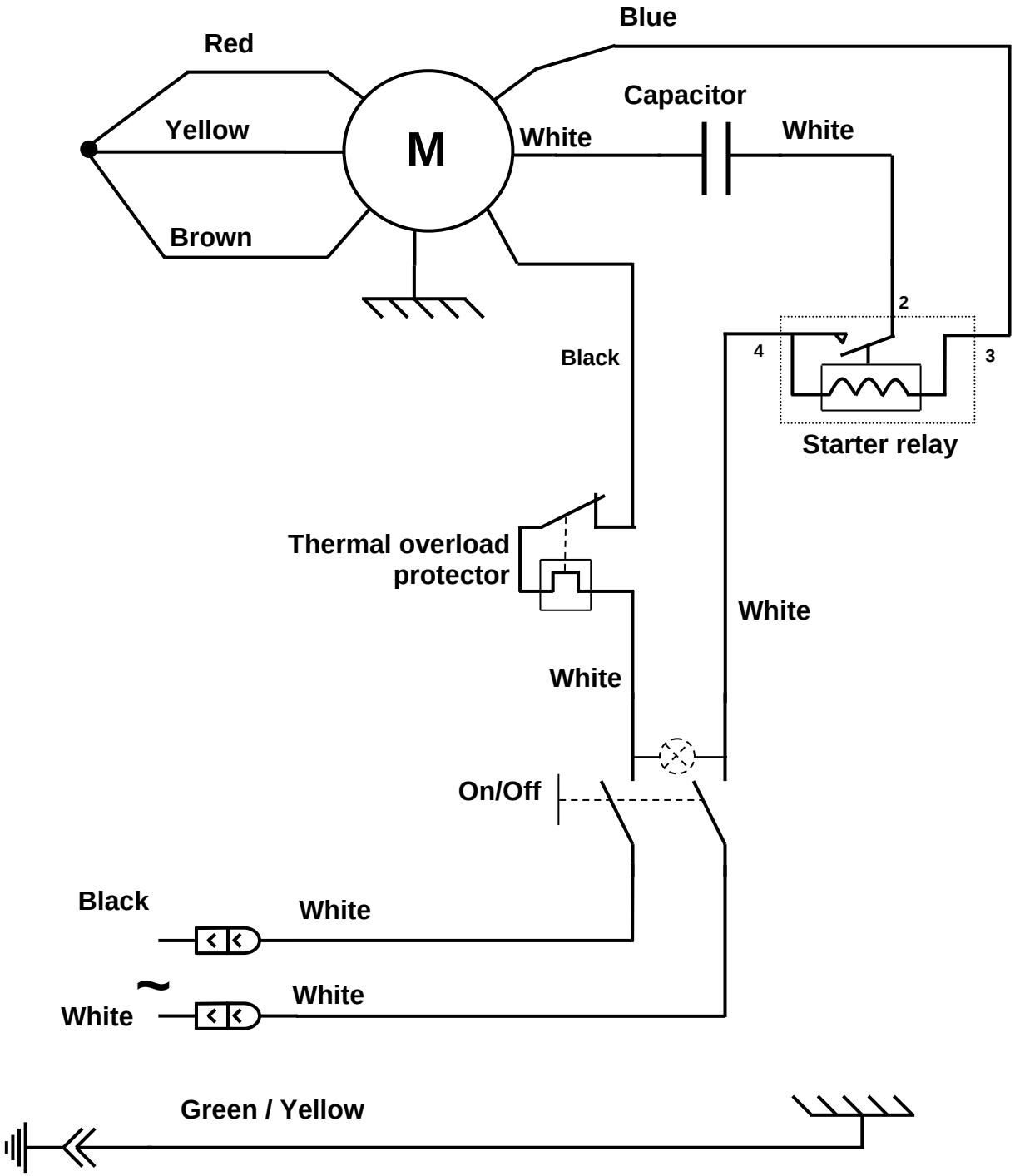

ENG

Figures

Model n° 1

Model n° 1PS

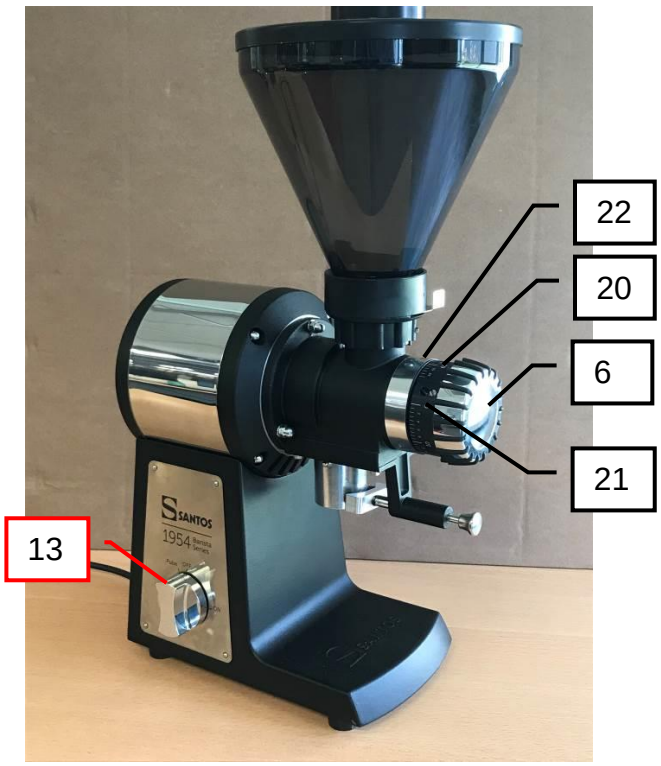

Model n° 01BAR

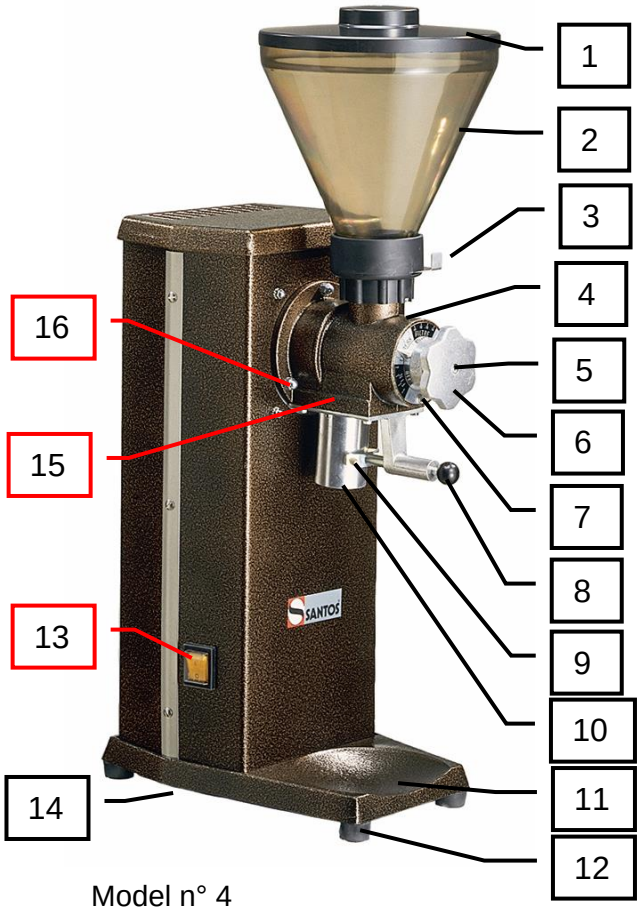

Model n° 4

ENG

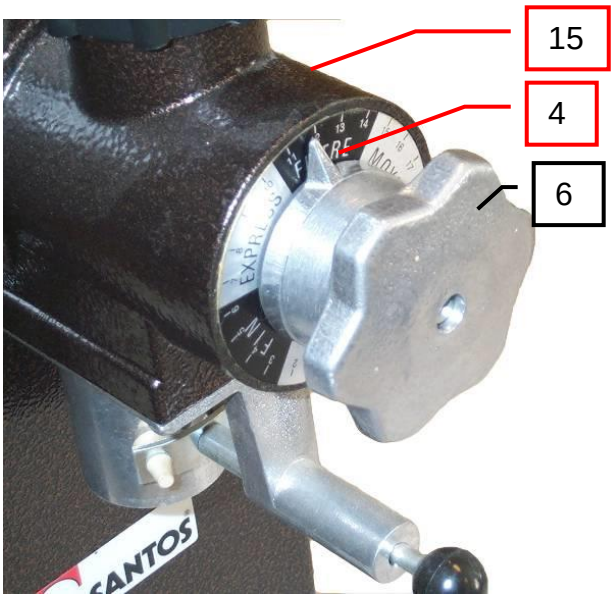

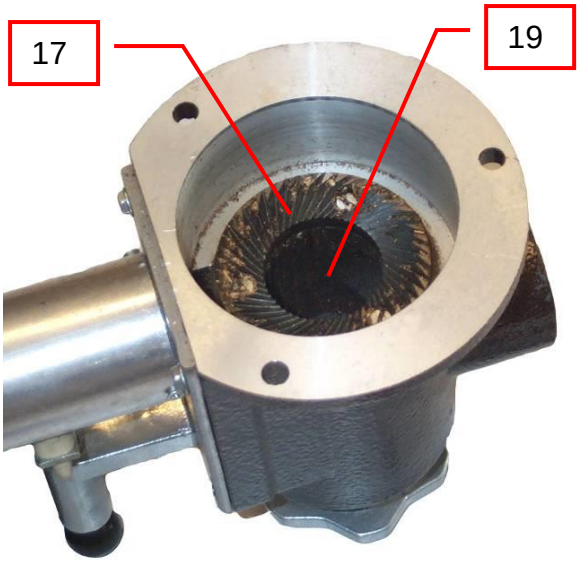

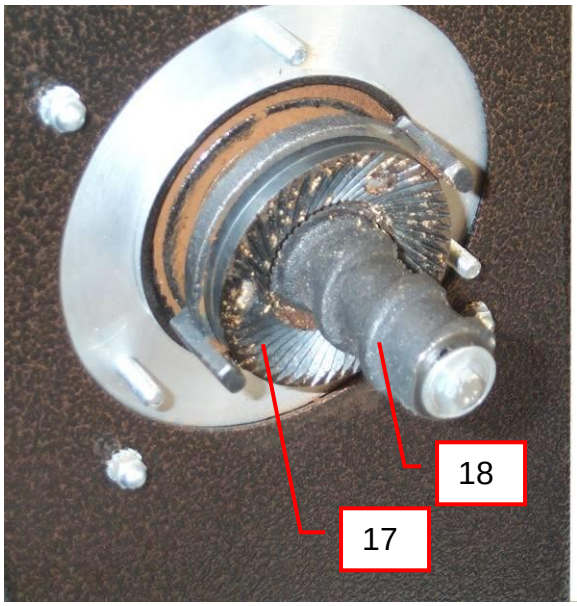

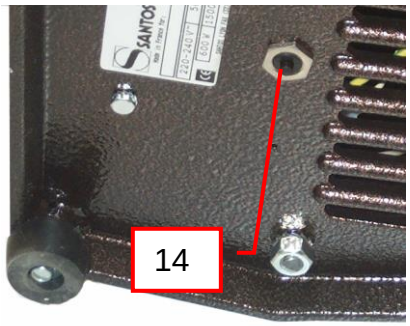

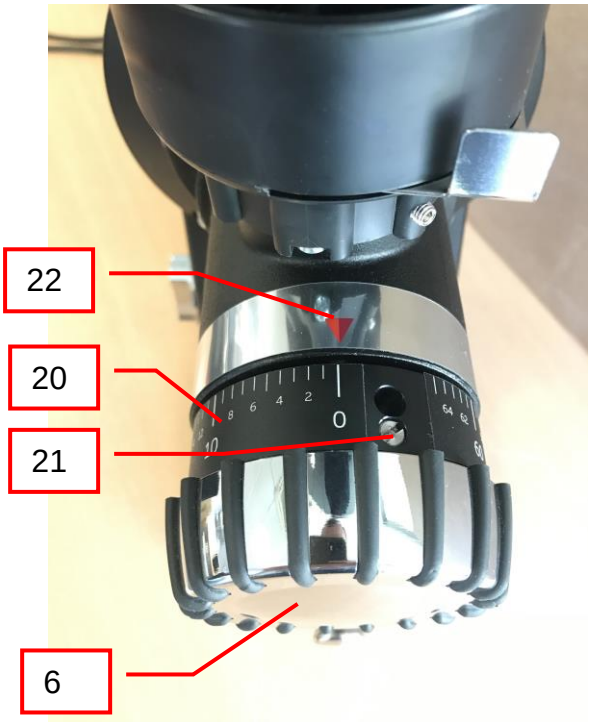

ENG

ITEM	Description
1	Bean hopper cover
2	Bean hopper
3	Bean hopper shutter
4	Adjusting dial
5	Adjuster button attachment
6	Grinding wheel gap adjuster button
7	Dial fastening screw
8	Bag grip cord
9	Bag grip strap
10	Grind outlet tube
11	Base
12	Non-slip feet
13	On-off switch
14	Thermal overload switch, with reset
15	Grinding unit
16	Grinding unit clamp nut
17	Grinding wheels
18	Mobile grind wheel carrier plate
19	Fixed grind wheel carrier plate
20	Graduated ring
21	Ring locking screw
22	Index mark

ENG

WARRANTY CERTIFICATE

WARRANTY

Since the 01.01.95, all our appliances comply with CE and possess the CE label. Our guarantee is of 24 months from the manufacturing date mentioned on the descriptive plate, except concerning the asynchronous motors (consisting of a rotor and a stator) which are warranted for 5 years from their manufacturing date. Warranty is strictly limited to the free replacement of any part of origin recognized by us as defective due to a defect or building default and identified as belonging to the concerned appliance. Warranty does not apply to damages resulting from installation or use non-complying with our appliance data sheet (user's manual) or in case of an evident lack of maintenance or disrespect of elementary security electric rules. It does not apply in case of regular wear and tear. Any replacement of parts under warranty will be realized after return of the defective part in our workshops, postage paid, supported by a copy of a conformity statement on which appears the serial number of the appliance. Every appliance is equipped with a descriptive plate conforming to the EC recommendations and of which a duplicate exists in the conformity statement (serial number, manufacturing date, electrical characteristics …). In case of serious damage judged repairable only in our workshops, and after prior consent from our departments, any appliance under guarantee is sent by the Distributor, carriage paid. In case of repairs or reconditioning of appliances not under guarantee, the round trip transport is payable by the distributor. The parts and workforce are invoiced at the current rate. A preliminary estimate can be supplied.

Coffee grinder not using SANTOS original burrs are not taken under guarantee. The warranty conditions, repairs, reconditioning, of the espresso coffee grinder are the object of a specific note. Our guarantee does not extend to the payment of penalties, the repair of direct or indirect damages and notably to any loss of income resulting from the nonconformity or the defectiveness of products, SANTOS's global responsibility being limited to the sale price of the delivered product and to the possible repair of the defective products.

In case of revelation of an imperfection during the warranty period, the Distributor has to, unless a different written agreement of SANTOS, indicate to his customer to stop any use of the defective product. Such a use would release SANTOS of any responsibility.

APPLIANCE IDENTIFICATION PLATE

SPECIMEN
For all documents not supplied with the appliance.

Printed, Faxed and Downloaded